Public Complex

Stormwater Guidance Document

NJPDES General Permit No NJ0141879

New Jersey Department of Environmental Protection
Division of Water Quality
Municipal Stormwater Regulation Program

Public Complex Stormwater Guidance Document

August 2004

State of New Jersey
Governor James E. McGreevey

New Jersey Department of Environmental Protection
Commissioner Bradley M. Campbell

Municipal Stormwater Regulation Program
Bureau of Nonpoint Pollution Control
Division of Water Quality

Acknowledgements

Barry Chalofsky, P.P., Chief
Bureau of Nonpoint Pollution Control
Division of Water Quality

Municipal Stormwater Regulation Team

The following members of the Department of Environmental Protection Municipal Stormwater Regulation Team, over the last three years, developed the Municipal Stormwater Regulation Program, including amendments to the New Jersey Pollutant Discharge Elimination System Stormwater rules (N.J.A.C. 7:14A), the municipal stormwater general permits, and guidance documents and supporting materials:

Bruce Friedman
William Minervini
Kimberly Maxwell
Janet Jessel
Fred Bowers
Cindy Davis
Matthew Klewin
Tosin Sekoni
Tara Wood
JulieAnn Zoleta

GIS Work and Mapping – Linda Coles

Additional Acknowledgements

The following employees of the Department of Environmental Protection have contributed in the preparation of this guidance document:

Sandra Blick
Kerry Kirk-Pflugh
John Laurita
Elizabeth Semple

Municipal Stormwater Advisory Group

The following members of the Municipal Stormwater Advisory Group assisted in the development of the Municipal Stormwater Regulation Programs:

Joseph Doyle, NJ Planning Officials
James DeMuro/Frank Scarantino,
NJ Association of Municipal Engineers/ NJ Association of Professional Engineers
Abigail Fair, Association of NJ Environmental Commissions
Andras Fekete, NJ Department of Transportation
Robert Simicsak, Township of Woodbridge
John Winterstella, NJ State League of Municipalities
Nancy Wittenberg, NJ Builders Association
Ray Zabihach, NJ Association of Counties

The program also included input from the New Jersey Department of Transportation's New Jersey Quality Initiative Group, with representatives of most of the State's transportation-related agencies and associations, and from the Best Management Practices Subcommittee composed of representatives from various municipal, county and state public works agencies.

Table of Contents

Chapter 1 - Introduction 1
Chapter 2 - Stormwater Pollution Prevention Plans and Example Forms 4
Chapter 3 - Public Notice 10
Chapter 4 - Post-Construction Stormwater Management in New Development and Redevelopment 12
- **Overview of the Stormwater Management Rules** 14
- **Major Development** 16
- **Design and Performance Standards for Major Development** 16
- **Operation and Maintenance of BMPs** 21
- **Maintenance Requirements - Stormwater Management Rules** 21
- **Storm Drain Inlets (New Development and Redevelopment)** 23

Chapter 5 - Local Public Education 27
- **Local Public Education Program** 27
- **(Colleges, Universities, and Military Bases only)** 27
- **Storm Drain Inlet Labeling** 32

Chapter 6 - Improper Disposal of Waste 34
- **Pet Waste** 34
- **Litter** 36
- **Improper Disposal of Waste** 37
- **Wildlife Feeding** 39
- **Vegetative Waste** 40
- **Illicit Connection Elimination and MS4 Outfall Pipe Mapping** 43
- **Procedures for Detecting, Investigating, and Eliminating Illicit Connections** 46

Chapter 7 - Solids and Floatable Control 54
- **Street Sweeping** 54
- **Storm Drain Inlets (Retrofitting)** 55
- **Stormwater Facility Maintenance** 59
- **Road Erosion Control Maintenance** 61
- **Outfall Pipe Stream Scouring Remediation** 62

Chapter 8 - Maintenance Yard Operations 65
- **De-icing Material and Sand Storage** 66
- **Fueling Operations** 69

Chapter 9 - Employee Training 75
Chapter 10 - Additional Measures 77
Chapter 11 - Optional Measures 78
- **Wildlife Management** 78
- **Fertilizer and Pesticide Management Program** 82
- **Retrofit of Existing Stormwater Management Measures** 82
- **Road De-icing** 83
- **Planting of Native Vegetation in Existing Landscapes** 85

Chapter 12 – Annual Report and Certification, and Blank Forms 86
- **Annual Report and Certification** 86
- **Annual Report and Certification Form** 87
- **Stormwater Pollution Prevention Plan Forms** 87
- **Illicit Connection Inspection Report Form** 87
- **Closeout Investigation Form** 87

Chapter 13 – Industrial and Construction Activity Operated by the Public Complex....88
Chapter 14 - Important Names, Addresses and Contacts.....89

Chapter 1 - Introduction

BACKGROUND

The Municipal Stormwater Regulation Program is part of the Clean and Plentiful Water initiative.

As result of the U. S. Environmental Protection Agency's (USEPA) Phase II rules published in December 1999, the New Jersey Department of Environmental Protection (Department) has developed the Municipal Stormwater Regulation Program. This program addresses pollutants entering our waters from certain storm drainage systems owned or operated by local, county, state, interstate, or federal government agencies. USEPA regulations refer to these systems as "municipal separate storm sewer systems" (MS4s). As a result of USEPA's new Phase II rules, the Department's Municipal Stormwater Regulation Program has issued New Jersey Pollutant Discharge Elimination System (NJPDES) permits to Public Complexes and highway agencies, as well as municipalities throughout the state. Public Complexes include certain large public colleges, universities, office complexes, prisons and other correctional facilities, hospital complexes and military bases. Highway Agencies include county, state, interstate, or federal government agencies that operate highways and other thoroughfares such as each of the 21 counties, the New Jersey Department of Transportation, the Port Authority of N.Y. and N.J., the New Jersey Turnpike Authority, and the South Jersey Transportation Authority. The Department's revised NJPDES stormwater rules were signed on January 5, 2004 by Commissioner Bradley Campbell, and appear in the February 2, 2004 edition of the New Jersey Register at 36 N.J.R. 813(a).

WHY IS THIS HAPPENING?

It is widely understood that stormwater/nonpoint sources are the largest remaining major source of pollutants in our waters. It is estimated that up to 60 percent of our existing water pollution problems are attributable to stormwater/nonpoint pollution. The quality of our surface and ground waters is directly related to the health of our ecosystems and the quality of our lives. Opportunities to engage in boating, swimming and fishing are diminished if water quality is impaired. Impaired water quality impacts shellfish production, tourism at beaches and coastal communities, and increases drinking water treatment costs.

"Floatables," like the trash seen here, contribute to stormwater/nonpoint pollution

Stormwater/nonpoint pollution can often be linked to our daily activities and lifestyles. The way we plan communities, build shopping centers, commute, and maintain lawns all impact stormwater quality. Many times people do not know or understand that there are alternatives. For example,

homeowners can have a green lawn without massive doses of fertilizers and pesticides; pet owners should deposit pet waste in the trash or in the toilet and not leave it at the curb. Often there is a lack of public awareness. People are unaware that storm drains often discharge directly to water bodies. When people allow motor oil, trash, and their pet's waste to enter the storm sewer in their street, they don't realize that it may end up in the lake down the block or many miles away. Individually these acts may seem insignificant, but the cumulative impacts of these activities contribute to stormwater/nonpoint source pollution and reduce water quality.

USEPA and the State of New Jersey realize the critical importance of substantially reducing stormwater/nonpoint pollution entering into the waters of the state. The Municipal Stormwater Regulation Program attempts to do just that, through the implementation of Statewide Basic Requirements (SBRs) and best management practices including public education, contained in the NJPDES Stormwater General Permits.

PROGRAM AND PERMIT DEVELOPMENT

The Department developed the Municipal Stormwater Regulation Program with input from members of the regulated community, affected governmental agencies, and the public. The Department established an advisory group that included representatives from municipalities and groups such as the New Jersey State League of Municipalities, New Jersey County Planners Association and the Association of New Jersey Environmental Commissions. A Best Management Practice subcommittee was also formed to assist in the development of practical Best Management Practices (BMPs) for the general permits. This subcommittee included representatives of municipal and county public works departments, and the New Jersey Department of Transportation and other highway agencies.

Public Complexes must comply with applicable design and performance standards in N.J.A.C. 7:8 for their own "new development and redevelopment projects."

PERMITS AND PERMIT REQUIREMENTS

The Department has issued four general permits to implement the Municipal Stormwater Regulation Program: the Public Complex Stormwater General Permit (Public Complex Permit); the Highway Agency Stormwater General Permit (Highway Permit); the Tier A Municipal Stormwater General Permit (Tier A Permit); and the Tier B Municipal Stormwater General Permit (Tier B Permit).

The permits address stormwater quality issues related to new development, redevelopment and existing development by requiring the development of a stormwater program and implementation of specific permit requirements referred to as Statewide Basic Requirements (SBRs). SBRs may also require the permittee to implement related best management practices (BMPs). All SBRs and related BMPs contain minimum standards, measurable goals, and implementation schedules. New development and redevelopment is addressed, in part, by requiring Public Complexes, municipalities, and Highway Agencies to comply with applicable design and performance standards established under N.J.A.C. 7:8 for certain projects. Existing development is addressed through broad topics including Local Public Education, and (for the Public Complex, Highway, and Tier A

Permits) Improper Disposal of Waste, Solids and Floatable Controls, Maintenance Yard Operations and Employee Training.

The Public Complex Permit, Highway Permit, Tier A Permit, and Tier B Permit may require the implementation of Additional Measures (AMs). AMs are measures (non-numeric or numeric effluent limitations) that may modify or be in addition to the SBRs required by the permits, and whose inclusion in a stormwater program may be required by a Water Quality Management Plan (WQM plan). AMs may be required by Total Maximum Daily Loads (TMDLs) approved or established by USEPA, regional stormwater management plans, or other elements of WQM plans. (See Chapter 11 for more details.)

Wildlife management, an Optional Measure, may include geese population control techniques.

The permits also allow for the inclusion of Optional Measures (in the Tier B Permit they are referred to as "Other Measures"). These are BMPs that are not specifically required by the permit but are recommended as ways to further enhance a stormwater program and improve water quality.

PURPOSE OF THIS GUIDANCE DOCUMENT

The purpose of this Guidance Document is to assist Public Complexes in understanding what is required under the Phase II Municipal Stormwater Regulation Program, and how to comply with the Public Complex Permit.

The Guidance Document includes various chapters, many of which are solely dedicated to discussing specific permit requirements. These permit requirements are either Statewide Basic Requirements (SBRs) or related Best Management Practices (BMPs). Each specific permit requirement, whether it be a SBR or BMP, is broken down into three section headings: **"What is required?," "What does this mean?"** and **"Want to know more?"** These section headings are intended to make understanding and implementing the permit language easier.

"What is required?" is language taken **directly** from the permit, and follows the same convention as in the permit: **minimum standard, measurable goal,** and **implementation schedule**. The minimum standard is one or more minimum actions that must be taken to comply with the requirements of the permit. The measurable goal is the mechanism for reporting to the Department your progress in meeting the minimum standard and is usually accomplished through the submittal of the Annual Report and Certification. The implementation schedule sets the deadlines for permit compliance.

"What does this mean?" explains the SBR or BMP minimum standard in an easier to understand format.

"Want to know more?" covers other information that may be of interest to your Public Complex, but is not necessary to know in order to comply with the permit. This section discusses why each BMP is important and what environmental benefits may result from their implementation. The Department may also make recommendations in "Want to know more?" that may be beneficial in implementing your program, but are not required by the permit.

Chapter 2 - Stormwater Pollution Prevention Plans and Example Forms

The Public Complex Permit requires that each Public Complex develop, implement, and enforce a stormwater program. The stormwater program is described in the Public Complex's ***written*** Stormwater Pollution Prevention Plan (SPPP). In simpler terms, the SPPP describes how your Public Complex will implement each permit requirement and it provides a place for record keeping, documenting when you met the permit requirements. The purpose of this Chapter is to assist you in completing your SPPP. In addition, at the end of this chapter are the example regulatory mechanisms discussed in **Chapter 6 - Improper Disposal of Waste**.

The chart on the next page (Figure 1) shows how the stormwater program, SPPP, Statewide Basic Requirements (SBRs) and other permit requirements (Additional Measures and Optional Measures) all relate to one another. This chart gives a simple representation of what may seem to be a complicated program. The Department has tried to reduce the amount of paperwork, and make forms easy to complete. Your Public Complex should be able to quickly complete its SPPP on its own, leaving more time and money for implementing the actual SBRs and best management practices (BMPs).

Completed example forms are contained in this Chapter. Blank forms are provided in Chapter 12 of this guidance manual. Electronic copies of the blank forms are also being provided on a compact disk or may be downloaded from our website at www.state.nj.us/dep/dwq/municstw.html. The forms on the CD and on our website are Adobe Acrobat PDF files and Microsoft Word files. The Word files have a fill-in feature that allows you to easily complete and update the forms. If the Public Complex has a full version of Adobe Acrobat, the PDF files can be saved and updated. Public Complexes do not have to use the Department's forms and may develop their own forms. However, it is important that the SPPP fully describe your Public Complex's stormwater program, **including items required by Attachment A of the permit** and specifics on implementation and record keeping.

When completing your SPPP, it is important to include as much detailed information about your Public Complex's stormwater program as possible. In addition, it is important to keep up with the record keeping requirements. The Department only includes some record keeping forms. In many instances it is more efficient to use database software (e.g., Illicit Connection Report Form) for this purpose, which allows easy updates. After each update, the updated spreadsheet should be printed out and attached to your SPPP. Public Complexes should handle all record keeping requirements in a similar fashion. It is also acceptable to keep handwritten records.

The more detailed information you include, the easier it will be to complete the Annual Report and Certification that must be submitted each year, ensure permit compliance, and work through personnel changes within the Public Complex. A well-written and detailed SPPP will also make the annual inspections conducted by the Department's Water Compliance and Enforcement Offices easier for both the Department and the Public Complex.

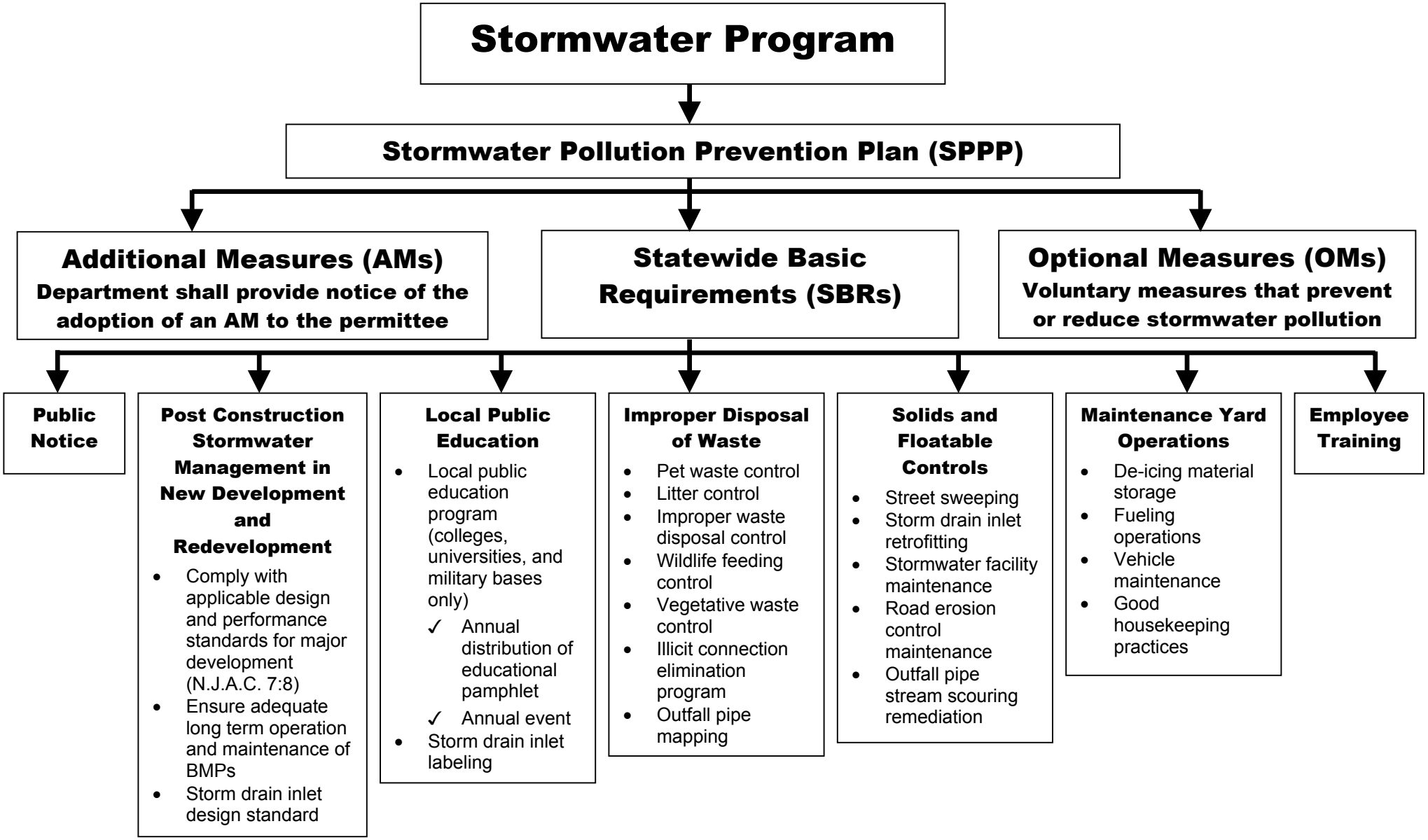
Stormwater Program
Stormwater Pollution Prevention Plan (SPPP)
Additional Measures (AMs)
Department shall provide notice of the adoption of an AM to the permittee
Statewide Basic Requirements (SBRs)
Optional Measures (OMs)
Voluntary measures that prevent or reduce stormwater pollution
Public Notice
Post Construction Stormwater Management in New Development and Redevelopment
• Comply with applicable design and performance standards for major development (N.J.A.C. 7:8)
• Ensure adequate long term operation and maintenance of BMPs
• Storm drain inlet design standard
Local Public Education
• Local public education program (colleges, universities, and military bases only)
✓ Annual distribution of educational pamphlet
✓ Annual event
• Storm drain inlet labeling
Improper Disposal of Waste
• Pet waste control
• Litter control
• Improper waste disposal control
• Wildlife feeding control
• Vegetative waste control
• Illicit connection elimination program
• Outfall pipe mapping
Solids and Floatable Controls
• Street sweeping
• Storm drain inlet retrofitting
• Stormwater facility maintenance
• Road erosion control maintenance
• Outfall pipe stream scouring remediation
Maintenance Yard Operations
• De-icing material storage
• Fueling operations
• Vehicle maintenance
• Good housekeeping practices
Employee Training

Figure 1

Public Complexes are not required to submit the SPPP to the Department. The Department will review the completed SPPP as part of regular compliance assistance inspections, so your Stormwater Program Coordinator should have access to the document at all times. In addition, the SPPP should be available for use by employees it may affect. It may be a good idea to have copies made for each member of the Stormwater Pollution Prevention Team with one person responsible for making updates or compiling record keeping data. You must also make the SPPP available to the public at reasonable times during regular business hours.

The SPPP is a dynamic document that is never "completed." It should not be filed away in a drawer. The SPPP needs to be continually updated and revised as people, tasks, and best management practices change. Each year, when you complete your Annual Report and Certification, is the perfect time to evaluate your stormwater program, SPPP, and make appropriate changes, revisions, and updates.

Stormwater Pollution Prevention Plan Forms

FORM 1 – STORMWATER POLLUTION PREVENTION TEAM

This team is made up of the individuals responsible for overseeing the implementation of the various permit requirements. These individuals should be selected for their knowledge in the subject area or as a result of their current responsibilities within the Public Complex. It is not possible for one individual within the Public Complex to implement a successful stormwater program. Due to the wide range of tasks required, a variety of personnel must be involved in planning and implementing the stormwater program. They could include legal counsels, consultants, physical plant personnel, campus police security, and members of environmental organizations. Your team members are not limited to only Public Complex personnel. They could include local volunteers, students, members of the local watershed association or environmental groups and educational professionals.

It is recommended that the team meet on a regular basis to coordinate activities and discuss permit compliance issues. An individual needs to be named the Stormwater Program Coordinator (this coordinator was identified in the Request for Authorization previously submitted to the Department). This individual will be the primary contact for the Department and will be contacted when the Department schedules an inspection.

FORM 2 – PUBLIC NOTICE

Public Complexes must comply with applicable State and local public notice requirements when providing for public participation in the development and implementation of the Public Complex's stormwater program. Public Complexes should use this form to summarize notice procedures.

FORM 3 – POST-CONSTRUCTION PROGRAM

This form is used to describe your overall post-construction stormwater management in new development and redevelopment program. This includes how your Public Complex will, among other things, ensure all major development undertaken by the Public Complex complies with the applicable aspects of the Stormwater Management Rule at N.J.A.C. 7:8, ensure long-term operation and maintenance of BMPs, and implement the new storm drain inlet design standard required by the permit.

FORM 4 – LOCAL PUBLIC EDUCATION PROGRAM (Colleges, Universities, and Military Bases only)

This form is provided for a Public Complex to describe its Local Public Education Program. This includes, at a minimum, how the colleges, universities, and military bases will distribute the annual mailing and specifics on how the colleges and universities will conduct its annual event. The annual mailing of the educational brochure provided by the Department (see Chapter 5 of this guidance document for details) may be done as a separate mailing, included with a mailing that the Public Complex already does, or may be hand delivered. In addition, colleges and universities need to provide details on the annual event, including what type of event it will be (e.g., part of a pre-existing homecoming celebration, Earth Day celebration, or Arbor Day celebration), where it will be held, approximate date, and what kind of educational materials will be handed out at the event. Colleges and universities must distribute the educational brochure, but should also consider handing out additional items such as: pencils, posters, T-shirts, or magnets with appropriate environmental messages to attract attention. The Department's Division of Watershed Management's Outreach and Education Bureau and/or local watershed groups can assist in putting together educational materials and scheduling the event. Their phone numbers are in the Important Names, Addresses and Contacts Chapter (Chapter 14) of this guidance document.

The Public Complex must also attach a separate sheet listing the dates of the annual mailing (or other means of distribution) and annual event.

A Public Complex may provide additional information on this form regarding their education program including any plans for a website, supplemental information that may be provided to users and/or residents of the Public Complex in addition to the Department's educational brochure, and any programs that they may conduct in addition to the required annual events.

FORM 5 - STORM DRAIN INLET LABELING (All Public Complexes)

This form is provided to describe how you will label storm drain inlets in accordance with the minimum standard (see permit or Chapter 5 of this guidance document for details). You should include specific information including your schedule, the type of label you will use (e.g., stencils, buttons, etc.), the contents of the label (e.g., logos, graphics, etc.), and whether you will be soliciting help from watershed groups or volunteer organizations or if users and employees will perform the labeling. It is strongly encouraged, however, that the labeling be done with volunteers as part of a larger environmental education outreach program. The description of your Storm Drain Inlet Labeling Program should also include long term maintenance plans. Public Complexes should track the progress of the storm drain inlet labeling to ensure that they meet the implementation schedule contained in the permit and so that they can report their progress in the Annual Report and Certification.

FORM 6 – MS4 OUTFALL PIPE MAPPING

Use this form to describe how you will prepare your outfall pipe map. Include the type of map you will use to identify your outfall pipes (e.g., a tax map or a different map drawn to an equal or more detailed scale). Also, identify who will prepare your map (e.g., employees, a consultant, etc.).

FORM 7 – ILLICIT CONNECTION ELIMINATION PROGRAM

Use this form to describe your Public Complex's ongoing program for detecting and eliminating illicit connections, including how you will perform your initial inspections, and how you will respond to complaints and/or reports of illicit connections (e.g., hotlines, etc.).

FORM 8 – ILLICIT CONNECTION RECORDS

Use these pages to keep track of the number of inspections you conduct annually, the number of dry weather flows and illicit connections you find, how many illicit connections you have eliminated or reported that year, and how many still remain.

NOTE: Results from illicit connection inspections should be recorded on the Department's Illicit Connection Inspection Report form (provided in Chapter 12 of this guidance manual). If a dry weather flow is found, the inspection report form for that outfall pipe must be included in your annual certification.

FORM 9 – IMPROPER DISPOSAL OF WASTE - VEGETATIVE WASTE COLLECTION AND DISPOSAL PROGRAM

Use this form to describe the details of your vegetative waste collection and disposal program. If the Public Complex contains homes where residents maintain yards, you should include specific information on collection schedules (e.g., the October, November, and December collections, the "spring clean-up," and any other collections that were needed), and how you notified your residents of these collection schedules. If there are any areas within your Public Complex that do not have yard wastes, they are exempted from these collections, and should be listed here.

FORM 10 – IMPROPER DISPOSAL OF WASTE – REGULATORY MECHANISMS

You should use this form to list the dates that the regulatory mechanisms required by the permit (e.g., pet waste, improper disposal of waste, wildlife feeding, etc.) are adopted or revised to meet the permit minimum standard. Also, use this form to discuss how the Public Complex will enforce these regulatory mechanisms, once adopted.

FORM 11 – SOLIDS AND FLOATABLE CONTROL – STORM DRAIN INLETS (RETROFITTING)

You should use this form to keep track of storm drain inlet retrofitting at your Public Complex. For each repaving, repairing, reconstruction or alteration project, you should include the name of the project, the projected start date of the project, its actual start date, and the date the project was/will be completed. The number of storm drain inlets that will be affected by the project should be listed here, along with the number of storm drains with hydraulic or other exemptions. The bottom of the form provides you with a space to explain if you have any alternative devices at your Public Complex and/or if you are planning on having any installed in the future. You should include any locations, and what types of alternative devices you have or will use.

FORM 12 – STREET SWEEPING & ROAD EROSION CONTROL

On the top portion of this form you should describe the street sweeping schedule you will maintain. You should also attach a street sweeping log that contains the date(s) and area(s) swept, the number of miles swept and the total amount of materials collected.

The bottom portion of this form should be used to describe your Road Erosion Control Maintenance Program, including how you will perform inspections, and the frequency of these inspections. A log containing the locations of road erosion, the repairs that were/will be made to fix the erosion, and the date of the repairs should be attached to your SPPP.

FORM 13 – STORMWATER FACILITY MAINTENANCE

This form asks for two separate things. On the top of the form you should describe your annual catch basin cleaning program and schedule.

The bottom portion of the form should be used to describe the stormwater facility cleaning and maintenance program you will implement to ensure that the facilities are properly functioning and operating. (If you are unsure of the different types of stormwater facilities you may have, there are examples in the permit, and in Chapter 7 of this guidance document.) A maintenance log containing information on any repairs/maintenance performed on stormwater facilities should be attached to your SPPP.

FORM 14 – OUTFALL PIPE STREAM SCOURING REMEDIATION

This form should be used to describe your stormwater outfall pipe stream scouring program and how you will detect and control active, localized stream and stream bank scouring around your stormwater outfall pipes. A prioritized list of all sites found to have such scouring should be attached to this form, and should include the anticipated date of the repair, the method of repair you will use, and the date the repair is completed.

FORM 15 – DE-ICING MATERIAL STORAGE

This form should be used to describe how you currently store your de-icing materials. If you do not currently meet the permit's requirements, explain here the steps you will take to meet these requirements. Include construction schedules and interim tarping procedures. If you will be sharing a storage structure, include the location of this structure and a list of all concerned public entities. Finally, if you store sand outdoors, describe how your sand storage sites meet the requirements of the permit.

FORM 16 – STANDARD OPERATING PROCEDURES

For each of the BMPs (Fueling Operations BMP, Vehicle Maintenance BMP, and Good Housekeeping BMP), indicate the date you developed and implemented the required Standard Operating Procedures (SOPs) and attach a copy of each SOP.

FORM 17 – EMPLOYEE TRAINING

Use this form to give details on the required employee training program. A list or table should be attached to this form indicating the required topic name, the employees that will receive training on that topic, and the date the training will be held.

Public Complex Stormwater General Permit

Stormwater Pollution Prevention Team Members

Number of team members may vary.

Completed by: *Jeffrey Montany*
Title: *Environmental/OSHA Coordinator*
Public Complex: *Garden State University*
NJPDES#: NJG *0646464*
PIID #: *12345*
Effective Date of Permit Authorization (EDPA): *April 1, 2004*
Date of completion: *3/7/05*
Date of most recent update: _____

Stormwater Program Coordinator: *Jeffrey Montany*
Title: *Environmental / OSHA Coordinator*
Office Phone #: *(973) 555-9876*
Emergency Phone #: *(973) 555-1234*

Public Notice Coordinator: *Linda Smith*
Title: *Garden State University Legal Counsel*
Office Phone #: *(973) 555-4567*
Emergency Phone #: *(973) 555-5432*

Post-Construction Stormwater Management Coordinator: *Matthew Mount*
Title: *Facility Planning and Operations Manager*
Office Phone #: *(973) 555-7410*
Emergency Phone #: *(973) 555-8520*

Local Public Education Coordinator: *Charles Miller*
Title: *Education Director for Calico River Watershed Association*
Office Phone #: *(973) 555-9630*
Emergency Phone #: *(973) 555-0369*

Regulatory Mechanism Coordinator: *Linda Smith*
Title: *Garden State University Legal Council*
Office Phone #: *(973) 555-4567*
Emergency Phone #: *(973) 555-5432*

Physical Plant Manager: *Mary Park*
Title: *Physical Plant Manager*
Office Phone #: *(973) 555-9731*
Emergency Phone #: *(973) 555-8426*

Employee Training Coordinator: *Jeffrey Montany*
Title: *Environmental / OSHA Coordinator*
Office Phone #: *(973) 555-9876*
Emergency Phone #: *(973) 555-1234*

Other: *Shannon Greenfield*
Title: *Campus Police Chief*
Office Phone #: *(973) 555-1313*
Emergency Phone #: *(973) 555-4646*

Other: *Dr. Richard Milano*
Title: *Ecology Professor*
Office Phone #: *(973) 555-2927*
Emergency Phone #: *(973) 555-8621*

SPPP Form 2 - Public Notice

Public Complex Information	
	Public Complex: *Garden State University*
	NJPDES # : NJG *0646464* PI ID #: *12345*
	Team Member/Title: *Linda Smith, Garden State University Legal Counsel*
	Effective Date of Permit Authorization (EDPA): *4/1/04*
	Date of Completion: *3/7/05* Date of most recent update: _____

Briefly outline the principal ways in which you comply with applicable State and local public notice requirements when providing for public participation in the development and implementation of your stormwater program.

For any meetings where public notice is required under the Open Public Meetings Act ("Sunshine Law," N.J.S.A. 10:4-6 et seq.), Garden State University provides public notice in a manner that complies with the requirements of that Act. In addition, Garden State University will solicit input while developing its Stormwater Program from the municipalities, interested students, employees, and neighboring residents. Linda Smith, Garden State University Legal Counsel, will prepare all Public Notice(s) required by this program.

SPPP Form 3 – New Development and Redevelopment Program

Public Complex Information	
	Public Complex: *Garden State University*
	NJPDES # : NJG *0646464* PI ID #: *12345*
	Team Member/Title: *Matthew Mount, Facility Planning and Operations Manager*
	Effective Date of Permit Authorization (EDPA): *4/1/04*
	Date of Completion: *3/7/05* Date of most recent update: _____

Describe in general terms your post-construction stormwater management in new development and redevelopment program (post-construction program), and how it complies with the Public Complex Permit minimum standard. This description must address how adequate long term operation and maintenance of BMPs will be ensured; compliance with the standard in Attachment C of the permit (new storm drain inlet design standard); adoption and implementation of applicable design and performance standards established under N.J.A.C. 7:8 for major development; and use of the Post-Construction Program Design Checklist for Individual Projects. Attach additional pages as necessary.

Garden State University is implementing a post-construction stormwater management in new development and redevelopment program as per the Public Complex Permit minimum standard. The University intends to consider the applicable design and performance standards as early as possible in the project planning and design process. To help ensure that the minimum standard is met, Garden State University will hire ABC Environmental/Engineering Group to help determine which of our development projects are subject to the standard, and to assist in the design and execution of these projects. The University's Annual Reports will list the projects subject to the standard, including the construction of a new Lakeview Auditorium. On February 1, 2005, the University's Board of Trustees promulgated Regulation No. 1-2005, which:

(1) Adopts (and incorporates by reference) for such projects the applicable design and performance standards (including maintenance requirements) established under N.J.A.C. 7:8 for major development, and the storm drain inlet design standard in Attachment C;

(2) Requires that all such projects be designed to comply with these design and performance standards and this storm drain inlet design standard; and

(3) Requires that the Public Complex Permit's Post-Construction Program Design Checklist for Individual Projects be completed before each project's construction is approved.

We expect that for most projects, we will comply with the storm drain inlet design standard in Attachment C either by conveying flows through a trash rack as described in the "Alternative Device Exemptions," or (for flows not conveyed through such a trash rack), by installing the NJDOT bicycle safe grate with, where necessary, a curb inlet opening no greater than two inches across the smallest dimension. The storm drain inlets will also be engineered to ensure adequate hydraulic performance.

Since the EDPA, Garden State University has not constructed any projects regulated by the Public Complex Permit as new development and redevelopment projects. (In the immediate future, the University will be building a new athletic facility disturbing approximately 5 acres. This project does not require any NJDEP Land Use permits and went to bid on January 15, 2004. Therefore, pursuant to Part I, Section F.3.iv of the Public Complex Permit, this project is not considered a "new development or redevelopment project" and is not subject to the requirements of the permit.)

When the University constructs any project regulated by the Public Complex Permit as a new development and redevelopment project, the University will ensure adequate long-term operation and maintenance of BMPs for that project by preparing a project maintenance plan in accordance with N.J.A.C. 7:8-5.8 where applicable, and by requiring and funding the University's implementation of that plan. For BMPs at stormwater facilities, maintenance of these BMPs will also be an integral part of the stormwater facility maintenance program that we are developing to ensure proper function and operation of all University stormwater facilities regulated by the Public Complex Permit.

SPPP Form 4 - Local Public Education Program

(Colleges, Universities, and Military Bases only)

Public Complex Information	
	Public Complex: *Garden State University*
	NJPDES # : NJG *0646464* PI ID #: *12345*
	Team Member/Title: *Charles Miller, Education Director at Calico River Watershed Association*
	Effective Date of Permit Authorization (EDPA): *4/1/04*
	Date of Completion: *3/7/05* Date of most recent update: _____

Local Public Education Program

Describe your Local Public Education Program. Be specific on how you will distribute your educational information, and how you will conduct your annual event (colleges and universities only). Attach additional pages with the date(s) of your annual mailing and the date and location of your annual event. (NOTE: This requirement is fulfilled in the employee training program for all other public complexes.)

Garden State University will develop and implement a Local Public Education Program in partnership with Charles Miller, Education Director at Calico River Watershed Association, who will be the contact individual for this program. (See partnership letter between Garden State University and XYZ Association, dated 1/5/05.) Charles Miller and university volunteers will copy and distribute the NJDEP educational pamphlet. The educational pamphlet will be placed in the mailboxes of all residences at Garden State University. Those employees and students who do not reside on campus will be mailed a package to their home address. The educational pamphlet will be sent along with other information at the beginning of each fall semester.

The University's Environmental Club holds an annual "Earth Day Fair" at the end of April. The educational brochure will be placed at a booth along with other environmental education material including for individuals, including T-shirts, posters, keychains, magnets, and pencils with a stormwater message. It is usually held outside the university common area, or indoors in the Terrapin Gymnasium. There will be additional activities, such as a campus cleanup and activities combined with the Calico River Watershed Association. For more information, the environmental club has an existing website, which can be located at www.gardenstateuniversity.edu/enviroclub. The website has been updated to include appropriate stormwater information on topics contained in the Public Complex permit.

While Garden State University is relying on both the Calico River Watershed Association and the Environmental Club to fulfill the Local Public Education requirement, Garden State University understands that it is ultimately their responsibility to comply with all permit requirements.

SPPP Form 5 – Storm Drain Inlet Labeling

Public Complex Information	
	Public Complex: *Garden State University*
	NJPDES # : NJG *0646464* PI ID #: *12345*
	Team Member/Title: *Charles Miller, Education Director at Calico River Watershed Association*
	Effective Date of Permit Authorization (EDPA): *4/1/04*
	Date of Completion: *3/7/05* Date of most recent update: _____

Storm Drain Inlet Labeling

Describe your storm drain inlet labeling program, including your labeling schedule, the details of your long-term maintenance plan, and plans on coordinating with watershed groups or other volunteer organizations.

Garden State University will implement a Storm Drain Inlet Labeling Program. Charles Miller, Education Director for the Calico River Watershed Association, will work with the University's Environmental Club to run this program. Although, Mr. Miller is not a university employee, he fully understands the responsibilities and tasks of this position. (See partnership letter between Garden State University and XYZ Association, dated 1/5/05.) The attached map divides the university into 2 sectors. Sector A is the area south of Calico Lake, and Sector B is the area north of Calico Lake. To heighten awareness about the labeling program, advertisements about the project will be posted throughout the campus. The Environmental Club, volunteers of the Calico River Watershed Association, and volunteers from the general public will do the storm drain inlet labeling. Although the permit allows up to 60 months to complete the storm drain inlet labeling, Garden State University will complete the labeling during 4 weekend labeling events scheduled for April and May 2005 (Sector A – April 2005, Sector B – May 2005). Garden State University will use plastic labels ordered from Binder Industries that is applied using adhesive. These labels are expected to last up to 10 years and require little maintenance. Each label will be printed with "No Dumping – Drains to Calico River".

SPPP Form 6 – MS4 Outfall Pipe Mapping

Public Complex Information	
	Public Complex: *Garden State University*
	NJPDES # : NJG *0646464* PI ID #: *12345*
	Team Member/Title: *Dr. Richard Milano, Ecology Professor & Mary Park, Physical Plant Manager*
	Effective Date of Permit Authorization (EDPA): *4/1/04*
	Date of Completion: *3/7/05* Date of most recent update: _____

Explain how you will prepare your map (include its type and scale, and the schedule for the mapping process). Who will prepare your map (e.g., Public Complex employees, a consultant, etc.)?

Dr. Richard Milano, Ecology Professor, will use a GPS Unit to locate the end of all outfall pipes operated by Garden State University. He will work with students enrolled in his Environmental Ecology and Biodiversity course, with other students and/or other professors, and with Mary Park's staff in order to accomplish this task. Garden State University has been divided into 2 sectors (see attached map): the area south of Calico Lake (Sector A), and the area north of Calico Lake (Sector B). The mapping will be conducted in the spring of 2006, and, if necessary, in the summer of 2006 as part of a summer college course, which will require students to conduct a survey of sections of Calico Lake, which is located on and divides the campus. Students will identify, GPS, map and investigate (see Illicit Connection Elimination Program and Outfall Pipe Stream Scouring Remediation Program) each outfall pipe. In addition to the mapping, students will conduct a biodiversity survey at various locations to identify potential impacts from Garden State University's stormwater discharges. Findings of the survey may be incorporated into future site design (see New Development and Redevelopment Program) and possible retrofitting of existing BMPs. Once all locations are identified, Dr. Milano will develop a map displaying outfall pipe locations, with an alphanumeric identifier at a scale of 1 inch = 100 feet. Calico Lake and all waterbodies receiving outfall pipe discharges will also be identified on the outfall pipe map. By April 2007, all outfall pipes will be mapped.

SPPP Form 7 – Illicit Connection Elimination Program

Public Complex Information	
	Public Complex: *Garden State University*
	NJPDES # : NJG *4646464* PI ID #: *12345*
	Team Member/Title: *Richard Milano, Ecology Professor and Mary Park, Physical Plant Manager*
	Effective Date of Permit Authorization (EDPA): *4/1/04*
	Date of Completion: *3/7/05* Date of most recent update: _____

Describe your Illicit Connection Elimination Program, and explain how you plan on responding to complaints and/or reports of illicit connections (e.g., hotlines, etc.). Attach additional pages as necessary.

Garden State University will develop and implement an Illicit Connection Elimination Program. In this program, the initial investigation will be conducted by Dr. Richard Milano, students, and Mary Park's staff during the outfall pipe mapping process (see outfall pipe mapping). If there are any complaints from students, employees, or the general public of any illicit connections, Dr. Milano will be notified, and he and Mary Park's staff will make an initial investigation of the discharge. Garden State University will be using NJDEP Illicit Connection Inspection Report forms and protocol for determining if a discharge is an illicit connection. Copies of all inspection reports of discharges with dry weather flows will be submitted to the NJDEP along with the Annual Inspection and Recertification. If the connection is found to be from Garden State University, any necessary corrections to eliminate the discharge will be made under the supervision of Mary Park or Matthew Mount, as appropriate. However, if the connection is found to be from another responsible party, Garden State University will report the illicit connection in writing to the NJDEP.

SPPP Form 8 – Illicit Connection Records

Public Complex Information	
	Public Complex: *Garden State University*
	NJPDES # : NJG *4646464* PI ID #: *12345*
	Team Member/Title: *Richard Milano, Ecology Professor*
	Effective Date of Permit Authorization (EDPA): *4/1/04*
	Date of Completion: *3/7/05* Date of most recent update: _____

Prior to July 1, 2006
Note: *Attach a copy of each illicit connection report form for outfalls found to have a dry weather flow.*
Total number of inspections performed this year? *N/A*
Number of outfalls found to have a dry weather flow? *N/A*
Number of outfalls found to have an illicit connection? *N/A*
How many of the Public Complex's own illicit connections were eliminated? *N/A*
Of the Public Complex's own illicit connections found, how many remain? *N/A*
How many illicit connections found to emanate from another entity were reported to NJDEP? *N/A*

July 1, 2006 – June 30, 2007
Note: *Attach a copy of each illicit connection report form for outfalls found to have a dry weather flow.*
Total number of inspections performed this year? *N/A*
Number of outfalls found to have a dry weather flow? *N/A*
Number of outfalls found to have an illicit connection? *N/A*
How many of the Public Complex's own illicit connections were eliminated? *N/A*
Of the Public Complex's own illicit connections found, how many remain? *N/A*
How many illicit connections found to emanate from another entity were reported to NJDEP? *N/A*

July 1, 2007 – June 30, 2008
Note: *Attach a copy of each illicit connection report form for outfalls found to have a dry weather flow.*
Total number of inspections performed this year? *N/A*
Number of outfalls found to have a dry weather flow? *N/A*
Number of outfalls found to have an illicit connection? *N/A*
How many of the Public Complex's own illicit connections were eliminated? *N/A*
Of the Public Complex's own illicit connections found, how many remain? *N/A*
How many illicit connections found to emanate from another entity were reported to NJDEP? *N/A*

July 1, 2008 – June 30, 2009 ***Note:*** *Attach a copy of each illicit connection report form for outfalls found to have a dry weather flow.*
Total number of inspections performed this year? *N/A*
Number of outfalls found to have a dry weather flow? *N/A*
Number of outfalls found to have an illicit connection? *N/A*
How many of the Public Complex's own illicit connections were eliminated? *N/A*
Of the Public Complex's own illicit connections found, how many remain? *N/A*
How many illicit connections found to emanate from another entity were reported to NJDEP? *N/A*

SPPP Form 9 – Vegetative Waste Collection and Disposal Program

Public Complex Information	
	Public Complex: *Garden State University*
	NJPDES # : NJG *0646464* PI ID #: *12345*
	Team Member/Title: *Mary Park, Physical Plant Manager*
	Effective Date of Permit Authorization (EDPA): *4/1/04*
	Date of Completion: *3/7/05* Date of most recent update: _____

Please describe your vegetative waste collection and disposal program. If the Public Complex contains homes where residents maintain yards, be sure to include the collection schedule and how you will notify the residents of this schedule. Attach additional pages as necessary.

Garden State University has no homes where residents are responsible for their own yard maintenance or generate any yard waste. All maintenance of common areas is performed by Garden State University employees. A program has been developed to ensure vegetative waste from the University is properly collected, handled, and disposed. All lawns and grass areas located on Garden State University property will be mowed by maintenance personnel, who will also rake and collect leaves and other vegetative debris. Grass clippings, leaves and all other vegetative waste from the University are shipped offsite to a DEP approved county regional recycling center.

SPPP Form 10 – Regulatory Mechanisms

Public Complex Information	
	Public Complex: *Garden State University*
	NJPDES # : NJG *0646464* PI ID #: *12345*
	Team Member/Title: *Linda Smith, Garden State University Counsel*
	Effective Date of Permit Authorization (EDPA): *4/1/04*
	Date of Completion: *3/7/05* Date of most recent update: _____

For each regulatory mechanism, give the date of adoption. If not yet adopted, explain the development status:

Pet Waste: *draft under review by University Board of Trustees*

Litter: *draft under review by University Board of Trustees*

Improper Waste Disposal: *draft under review by University Board of Trustees*

Wildlife Feeding: *draft under review by University Board of Trustees*

Vegetative Waste: *N/A (the University has no homes where residents maintain yards)*
(NOTE: If the Public Complex is not developing a vegetative waste regulatory mechanism because the Public Complex has no homes where residents maintain yards, provide that explanation above.)

Illicit Connections: *draft under review by University Board of Trustees*

What is the nature of these regulatory mechanisms and how will they be enforced?

The regulatory mechanisms will consist of regulations made and promulgated by the Garden State University Board of Trustees under N.J.S.A. 18A:64-6. In accordance with N.J.S.A. 18A:64-8, the University President shall have such powers as shall be requisite for the execution and enforcement of these regulations, subject to the powers and duties held by the Board of Trustees (e.g., authority over employment matters under N.J.S.A. 18A:3B-6, 6-18, and 64-6). Draft regulations prepared by the University Counsel are under review by that Board. The type of enforcement action will depend on the nature of the violator. For example, any University student who violates a regulation will be subject to sanctions in accordance with the University's Student Conduct Code; any University employee who violates a regulation will be subject to employee disciplinary action in accordance with applicable employment statutes and contracts; and any visitor who violates a regulation will be subject to ejection from University property.

The promulgated versions of all five applicable regulatory mechanisms will be effective by October 1, 2005.

If your position is that the Public Complex has no legal authority to adopt and/or enforce a mechanism to regulate pet possession or pet waste disposal, littering, improper waste disposal, or wildlife feeding by the general public on Public Complex property, attach a statement from your attorney supporting this position.

Not applicable.

SPPP Form 11 – Storm Drain Inlets (Retrofitting)

Public Complex Information

Public Complex: *Garden State University*

NJPDES # : NJG *0646464* PI ID #: *12345*

Team Member/Title: *Mary Park, Physical Plant Manager*

Effective Date of Permit Authorization (EDPA): *4/1/04*

Date of Completion: *3/7/05* Date of most recent update: _____

What type of storm drain inlet design will generally be used for retrofitting?

For most projects, Garden State University will use the NJDOT bicycle safe grate style and (if needed) a curb opening with a clear space no bigger than two inches across the smallest dimension.

Repaving, repairing, reconstruction or alteration project name (Attach additional pages as necessary.)	Projected start date	Start date	Date of completion	# of storm drain inlets	# of storm drains w/ hydraulic performance exemptions
College Drive	*2/1/05*	*2/1/05*	*Ongoing*	*3*	*1*
Student Parking Lot 5	*8/15/05*	*N/A*	N/A	*1*	*0*

Are you claiming any alternative device or historic place exemptions for any projects? If so, please explain?

Since Garden State University's storm drain inlets do not combine into a common outfall, but discharge through numerous discrete discharge points, an alternative device, such as trash netting, at the discharge points would not be cost effective. Also, Garden State University is not located in a historic district. However, Garden State University is studying the feasibility of retrofitting infiltration BMPs into the existing campus to reduce the flow of stormwater to Calico Lake and increase recharge into the groundwater. These BMPs may include a trash rack (a 1/2" spacing on each bar) and therefore, those storm drain inlets which discharge to the BMP would not need to be retrofitted.

SPPP Form 12 – Street Sweeping and Road Erosion Control Maintenance

Public Complex Information	
	Public Complex: *Garden State University*
	NJPDES # : NJG *0646464* PI ID #: *12345*
	Team Member/Title: *Mary Park, Physical Plant Manager & Shannon Greenfield, Campus Police Chief*
	Effective Date of Permit Authorization (EDPA): *4/1/04*
	Date of Completion: *3/7/05* Date of most recent update: _____

Street Sweeping

Please describe the street sweeping schedule that you will maintain.
(NOTE: Attach a street sweeping log containing the following information: date and area swept, # of miles swept and the total amount of materials collected.)

Garden State University shall sweep all defined areas, including parking lots and curbed streets. All such areas located within the dormitories and residence halls complex will be swept during the 1st week of each month. All such areas located within the academic building complex and the apartment complex will be swept during the 2nd and 3rd weeks of each month, consecutively. Please see attached sheet(s) for Garden State University's Street Sweeping Log.

Road Erosion Control Maintenance

Describe your Road Erosion Control Maintenance Program, including inspection schedules. A list of all sites of roadside erosion and the repair technique(s) you will be using for each site should be attached to this form.
(NOTE: Attach a road erosion control maintenance log containing the following information: location, repairs, date.)

Garden State University will use Campus Police to monitor all roads and streets for erosion problems during normal patrols. All identified road erosion problems will be reported to Shannon Greenfield, Campus Police Chief. During quarterly SPPP Team meetings, identified areas of erosion will be discussed and repairs prioritized. All erosion repairs will be made in accordance with Standards for Soil Erosion and Sediment Control in NJ by the University maintenance staff. Campus Police will maintain an inspection log, and Mary Park, Physical Plant Manager, will maintain a list of all repairs and the dates completed. An annual report will be submitted to the NJDEP describing the progress and status of the Road Erosion Control Maintenance Program.

SPPP Form 13 – Stormwater Facility Maintenance

Public Complex Information	
	Public Complex: *Garden State University*
	NJPDES # : NJG *0646464* PI ID #: *12345*
	Team Member/Title: *Mary Park, Physical Plant Manager & Shannon Greenfield, Campus Police Chief*
	Effective Date of Permit Authorization (EDPA): *4/1/04*
	Date of Completion: *3/7/05* Date of most recent update: _____

Please describe your annual catch basin cleaning program and schedule. Attach additional pages as necessary.

Garden State University will implement an annual catch basin cleaning program to remove debris and maintain catch basin function and efficiency. Robin Doe, Maintenance Engineer of Garden State University, will ensure that all catch basins are inspected and cleaned once every April/May. If, at the time of inspection, no sediment, trash, or debris are observed in a catch basin, then that catch basin will not be cleaned. All catch basins will be inspected each year, even if they were found to be "clean" the previous year. The annual catch basin cleaning program will begin April 2005 (12 months from the EDPA). If any repairs need to be made, Garden State University will take proper measures to see that all catch basins are repaired. Garden State University will submit an annual report including a record of inspections, maintenance, and repairs to the NJDEP.

Please describe your stormwater facility maintenance program for cleaning and maintenance of all stormwater facilities operated by the Public Complex. Attach additional pages as necessary.
(NOTE: Attach a maintenance log containing information on any repairs/maintenance performed on stormwater facilities to ensure their proper function and operation.)

Garden State University will implement a stormwater facility maintenance program to ensure all stormwater facilities operated by the university function properly. Garden State University has identified the following stormwater facilities which they own or operate:
- catch basins
- storm drains
- swale along Campus Drive
- infiltration basin near north side of campus
- infiltration basin near south side of campus
- oil/water separator at maintenance yard
- wetland project next to Zoleta Hall

The stormwater facilities identified above will be inspected at least annually by Robin Doe and staff, and any identified repairs will be made.

SPPP Form 14 - Outfall Pipe Stream Scouring Remediation

Public Complex Information	
	Public Complex: *Garden State University*
	NJPDES # : NJG *0646464* PI ID #: *12345*
	Team Member/Title: *Mary Park, Physical Plant Manager*
	Effective Date of Permit Authorization (EDPA): *4/1/04*
	Date of Completion: *3/7/05* Date of most recent update: _____

Describe your stormwater outfall pipe scouring detection, remediation and maintenance program to detect and control active, localized stream and stream bank scouring. Attach additional pages as necessary.

(NOTE: Attach a prioritized list of sites observed to have scouring, date of anticipated repair, method of repair and date of completion.)

Garden State University will implement an outfall pipe scouring detection, remediation and maintenance program. Garden State University will assess active scouring at its outfall pipes when they are mapped. A spreadsheet will be maintained indicating any necessary remediation and maintenance to any outfall pipes. If remediation is necessary, Garden State University will repair in accordance with the Standards for Soil Erosion and Sediment Control in NJ. Garden State University will conduct annual inspections of the stormwater outfall pipes. During inspection, Garden State University will also photodocument the outfall pipe locations. Garden State University will ensure that it receives all required local, state, or federal permits, such as NJDEP stream encroachment permits, prior to starting any repairs/remediation.

SPPP Form 15 – De-icing Material Storage

Public Complex Information	
	Public Complex: *Garden State University*
	NJPDES # : NJG *4646464* PI ID #: *12345*
	Team Member/Title: *Matthew Mount, Facility Planning and Operations Manager*
	Effective Date of Permit Authorization (EDPA): *4/1/04*
	Date of Completion: *3/7/05* Date of most recent update: _____

De-icing Material Storage

Describe how you currently store your Public Complex's de-icing materials, and describe your inspection schedule for the storage area. If your current storage practices do not meet the de-icing material storage SBR describe your construction schedule and your seasonal tarping interim measures. If you plan on sharing a storage structure, please include its location, as well as a complete list of all concerned public entities. If you store sand outdoors, describe how it meets the minimum standard.

Garden State University currently stores its de-icing materials in a stockpile on top of a maintenance pad. Garden State University will implement the interim seasonal tarping procedures at these sites until a permanent structure is built. From October 15th through April 30th we will inspect each tarp weekly to ensure that it is covering the salt pile. Inspections for spilled salt will be completed after loading and unloading activities.

Garden State University plans on using a storage structure for the de-icing materials. The following tentative schedule is set for the construction:

1/05 - site selection

4/05 - site design

7/05 - bid construction contract

8/05 - apply for required permits

4/06 - begin construction

10/06 - complete construction

A 7 month buffer is built into the tentative schedule for potential delays in bidding of the project, procuring permits or delays due to weather. However, the storage structure should be complete within 36 months of EDPA (4/07).

SPPP Form 16 – Standard Operating Procedures

Public Complex Information	
	Public Complex: *Garden State University*
	NJPDES # : NJG *4646464* PI ID #: *12345*
	Team Member/Title: *Mary Park, Physical Plant Manager*
	Effective Date of Permit Authorization (EDPA): *4/1/04*
	Date of Completion: *3/7/05* Date of most recent update: _____

BMP	Date SOP went into effect.	Describe your inspection schedule.
Fueling Operations (including the required practices listed in Attachment D of the permit)	*May 7, 2004*	*Semi-annual inspections of all fueling locations will be conducted.*
Vehicle Maintenance (including the required practices listed in Attachment D of the permit)	*May 22, 2004*	*Quarterly inspections will be conducted.*
Good Housekeeping Practices (including the required practices listed in Attachment D of the permit) **Attach inventory list required by Attachment D of the permit.**	*June 1, 2004*	*Monthly inspections at Garden State University will be conducted to ensure good housekeeping practices are being implemented.*

Garden State University
Standard Operating Procedures
Vehicle and Equipment Fueling

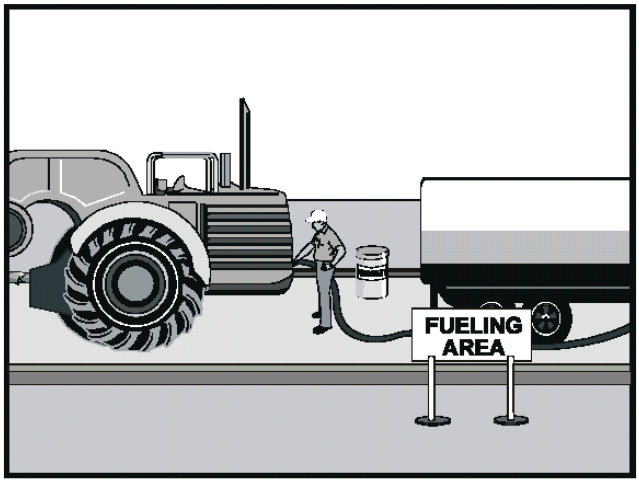

Garden State University
Maintenance Yards with
Fueling Operations

East College Drive
Maintenance Yard

West College Drive
Maintenance Yard

Introduction and Purpose

Vehicle and equipment fueling procedures and practices are designed to minimize pollution of surface or ground waters. Understanding the procedures for delivering fuel into vehicles, mobile fuel tanks, and storage tanks is critical for this purpose. Safety is always the priority.

Scope

These procedures are to be implemented at all maintenance yards with fueling, including mobile fueling operations.

Standards and Specifications (for vehicle and equipment fueling)

- Shut the engine off
- Ensure that the fuel is the proper type of fuel.
- Absorbent spill clean-up materials and spill kits shall be available in fueling areas and on mobile fueling vehicles and shall be disposed of properly after use.
- Nozzles used in vehicle and equipment fueling shall be equipped with an automatic shut-off to prevent overfill.
- Fuel tanks shall not be "topped off."
- Mobile fueling shall be minimized. Whenever practical, vehicles and equipment shall be transported to the designated fueling area in the maintenance yard.
- Clearly post, in a prominent area of the facility, instructions for safe operation of fueling equipment, and appropriate contact information for the person(s) responsible for spill response.

Standards and Specifications (for bulk fueling)	• Drip pans or absorbent pads shall be used under all hose and pipe connections and other leak-prone areas during bulk fueling. • Block storm sewer inlets, or contain tank trucks used for bulk transfer, with temporary berms or temporary absorbent booms during the transfer process. If temporary berms are being used instead of blocking the storm sewer inlets, all hose connection points associated with the transfer of fuel must be within the temporary berms during the loading/unloading of bulk fuels. • Protect fueling areas with berms and/or dikes to prevent run-on, runoff, and to contain spills. • A trained employee must always be present to supervise during bulk transfer.
Spill Response	• Conduct cleanups of any fuel spills immediately after discovery. • Uncontained spills are to be cleaned using dry cleaning methods only. Spills shall be cleaned up with a dry, absorbent material (e.g., kitty litter, sawdust, etc.) and absorbent materials shall be swept up. • Collected waste is to be disposed of properly. • Contact the Garden State University Spill Response Team at 555-7644.
Maintenance and Inspection	• Fueling areas and storage tanks shall be inspected monthly. • Keep an ample supply of spill cleanup material on the site. • Any equipment, tanks, pumps, piping and fuel dispensing equipment found to be leaking or in disrepair must be repaired or replaced immediately.

Garden State University
Standard Operating Procedure
Vehicle Maintenance

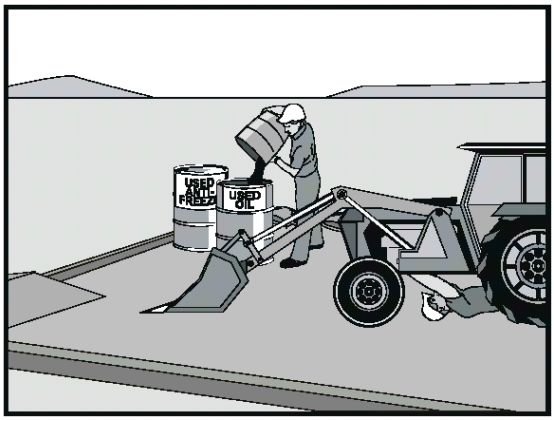

Garden State University Maintenance Yards BMP Objectives

- Waste Management
- Spill Prevention, Containment and Countermeasures
- Pollution Control

Introduction and Purpose

This SOP contains the basic practices of vehicle maintenance to be implemented at all maintenance yards including maintenance activities at ancillary operations at Garden State University. The purpose of this SOP is to provide a set of guidelines to the Garden State University vehicle maintenance yards including maintenance activities at ancillary operations.

Scope

This SOP applies to all maintenance yards including maintenance activities at ancillary operations within Garden State University.

Standards and Specifications

- Conduct vehicle maintenance operation only in designated areas.
- Whenever possible, perform all vehicle and equipment maintenance activities at an indoor location with a paved floor.
- Always use drip pans.
- Absorbent spill clean-up materials shall be available in maintenance areas and shall be disposed of properly after use.
- Maintenance areas shall be protected from stormwater run-on and runoff, and shall be located at least 50 feet from downstream drainage facilities and watercourses.
- Use portable tents or construct a roofing-device over long-term maintenance areas and for projects that must be performed outdoors.

- Do not dump or dispose oils, grease, fluids, and lubricants onto the ground.
- Do not dump or dispose batteries, used oils, antifreeze and other toxic fluids into a storm drain or watercourse.
- Do not bury tires.
- Collect waste fluids in properly labeled containers and dispose properly.

Spill Response and Reporting

- Provide spill containment dikes or secondary containment around stored oils and other fluid storage drum(s).
- Conduct cleanups of any fuel spills immediately after discovery.
- Spills are to be cleaned using dry cleaning methods only. Spills shall be cleaned up with a dry, absorbent material (e.g., kitty litter, sawdust, etc.) and the rest of the area is to be swept.
- Collected waste is to be disposed of properly.
- Contact the Garden State University Spill Response Team at 555-1515.

Maintenance and Inspection

- Periodically check for leaks and damaged equipment and make repairs as necessary.

Garden State University
Standard Operating Procedure
Good Housekeeping

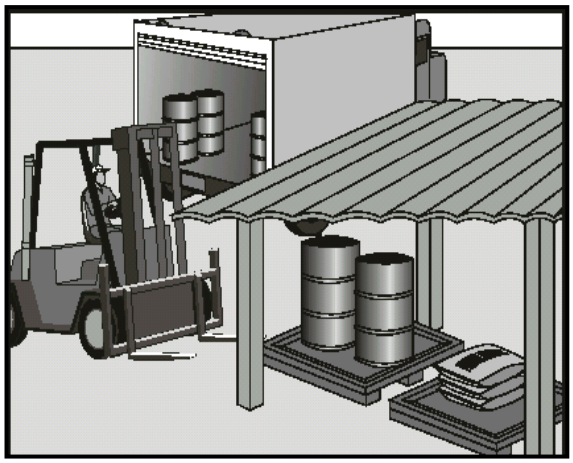

Garden State University Good Housekeeping Goals

-Proper Recycling
-Proper Waste Disposal
-Pollution Prevention

Introduction and Purpose

This SOP contains the basic practices of good housekeeping to be implemented at maintenance yards including maintenance activities at ancillary operations at Garden State University. The purpose of this SOP is to provide a set of guidelines for the employees of Garden State University for Good Housekeeping Practices at their maintenance yards including maintenance yards at ancillary operations.

Scope

This SOP applies to all maintenance yards including maintenance activities at ancillary operations in Garden State University.

Standards and Specifications (General)

- All containers should be properly labeled and marked, and the labels must remain clean and visible.
- All containers must be kept in good condition and tightly closed when not in use.
- When practical, chemicals, fluids and supplies should be kept indoors.
- If containers are stored outside, they must be covered and placed on spill platforms.
- Keep storage areas clean and well organized.
- Spill kits and drip pans must be kept near any liquid transfer areas, protected from rainfall.
- Absorbent spill clean-up materials must be available in maintenance areas and shall be disposed of properly after use.
- Place trash, dirt and other debris in the dumpster.
- Collect waste fluids in properly labeled containers and dispose of them properly.
- Establish and maintain a recycling program by disposing papers, cans, bottles and trash in designated bins.

Standards and Specifications (Salt and De-icing Material Handling)	• During loading and unloading of salt and de-icing materials, prevent and/or minimize spills. If salt or de-icing materials are spilled, remove the materials using dry cleaning methods. All collected materials shall be either reused or properly discarded. • Sweeping should be conducted once a week to get rid of dirt and other debris. Sweeping should also be conducted immediately following loading/unloading activities, when practical. • Minimize the tracking of materials from storage and loading/unloading areas. • Minimize the distance that salt and de-icing materials are transported during loading/unloading activities. • Any materials that are stored outside must be tarped when not actively being used. • If interim seasonal tarping is being implemented, de-icing materials may be stored outdoors only between October 15th through April 30th.
Spill Response and Reporting	• Conduct clean up of any spill(s) immediately after discovery. • Spills are to be cleaned using dry cleaning methods only. • Contact the Garden State University Spill Response Team At 555-1515.
Maintenance and Inspection	• Periodically check for leaks and damaged equipment and make repairs as necessary. • Perform monthly inspections of all (indoor and outdoor if applicable) storage locations.

SPPP Form 17 – Employee Training

Public Complex Information	
	Public Complex: *Garden State University*
	NJPDES # : NJG *4646464* PI ID #: *12345*
	Team Member/Title: *Jeffrey Montany, Environmental/OSHA Coordinator*
	Effective Date of Permit Authorization (EDPA): *4/1/04*
	Date of Completion: *3/7/05* Date of most recent update: _____

Describe your employee training program. For each required topic, list the employees that will receive training on that topic, and the date the training will be held. Attach additional pages as necessary.

Garden State University will conduct a training program for appropriate employees in accordance with topics contained in the permit. The coordinator for these trainings will be Jeffrey Montany, Environmental/OSHA Coordinator. All training sessions will be held in Zoleta Hall, Room 100. Sign-In sheets will be attached to the SPPP.

Tentative Schedule for classes:

June/July 2005

The Waste Disposal Education course will cover topics such as: Pet Waste Control, Improper Waste Disposal Control, Wildlife Feeding Control, Illicit Connection Prohibition. This course will be given by Linda Smith, Garden State University Legal Counsel, along with assistance from Shannon Greenfield, Campus Police Chief. All maintenance personnel and campus police staff will be required to attend, along with representatives from the employee and student discipline programs of the Human Resources and Dean of Students Departments.

June/July 2005

Stormwater Facility Maintenance, Street Sweeping, and Road Erosion Control training will be covered in a morning classroom session. Maintenance Yard Operations training will be given in the afternoon covering fueling, vehicle maintenance, and good housekeeping practices. Robin Doe and Mary Park will conduct this session. All maintenance personnel will be required to attend.

August 2005

A morning classroom session of Illicit Connection Elimination and Outfall Pipe Mapping, and Outfall Pipe Stream Scouring Remediation will be given by Dr. Richard Milano, Ecology Professor. The afternoon session will consist of GPS and field mapping, training on investigating and inspecting of illicit connections, and training on identifying outfall pipe stream scouring. All appropriate professors and employees will be required to attend.

August 2005

The Construction Activity/Post-Construction Stormwater Management in New Development and Redevelopment Seminar will be conducted by Matthew Mount, Facility Planning and Operations. All ABC Environmental/Engineering Group employees involved with the Garden State University project will be required to attend.

Garden State University
Storm Drain Inlets Labeling and Outfall Pipe Map

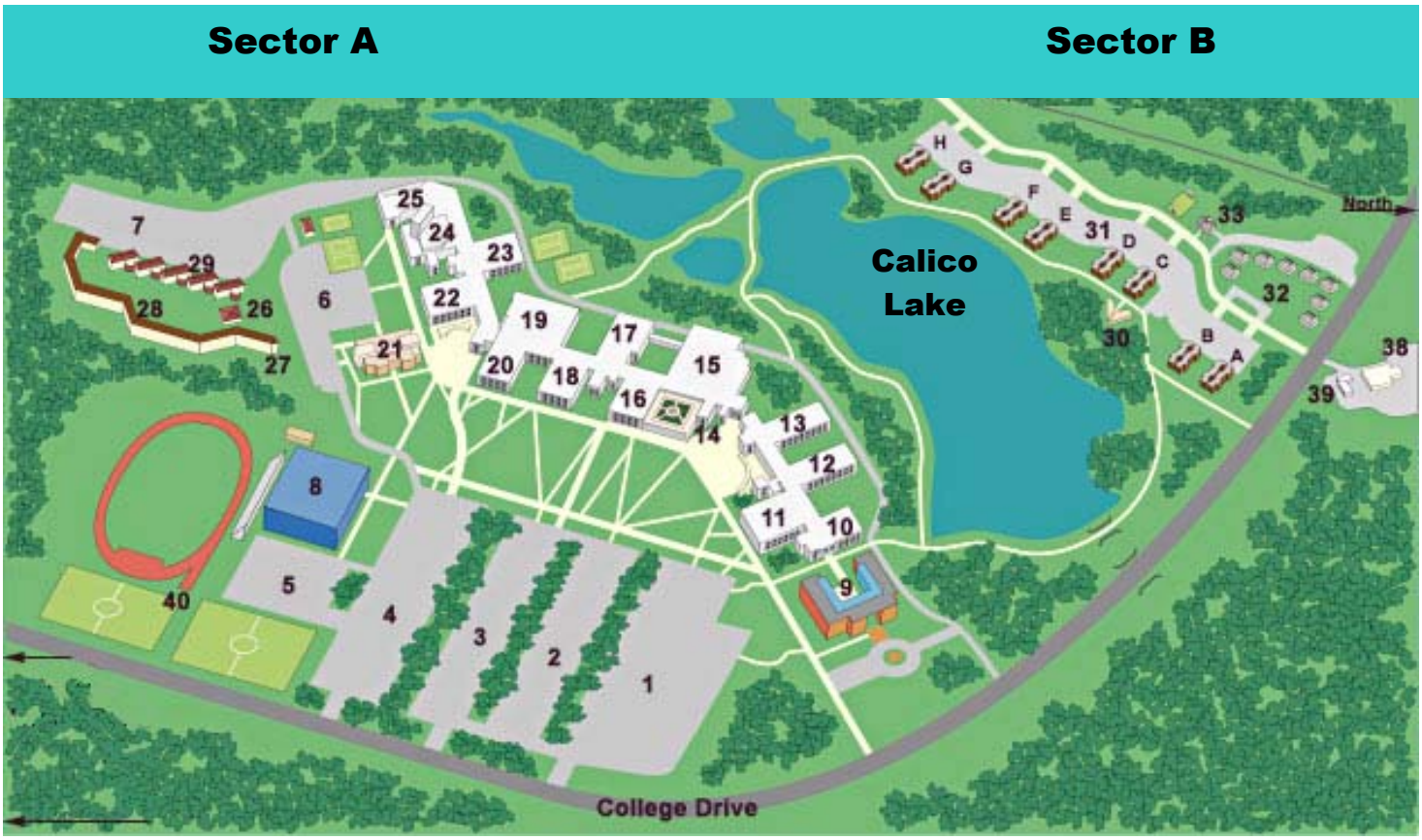

Garden State University has been divided into two sectors for the purposes of storm drain inlet labeling and outfall pipe mapping. Sector A is the area south of Calico Lake. Sector B is the area north of Calico Lake.

- Garden State University shall label (see storm drain inlet labeling program in SPPP for details) all required storm drain inlets in accordance with the following schedule:
  Sector A – April 2005
  Sector B – May 2005
- Garden State University shall map (see outfall pipe mapping program in SPPP for details) all required outfall pipes in the spring of 2006, and, if necessary, in the summer of 2006.

GARDEN STATE UNIVERSITY

Subject: Pet Waste Control

Effective Date: _____, 200_

Approved by: _____

I. Purpose:

A regulation to establish requirements for the proper disposal of pet solid waste at Garden State University, so as to protect public health, safety and welfare, and to prescribe penalties for failure to comply.

II. Definitions:

For the purpose of this regulation, the following terms, phrases, words and their derivations shall have the meanings stated herein unless their use in the text of this regulation clearly demonstrates a different meaning. When not inconsistent with the context, words used in the present tense include the future, words used in the plural number include the singular number, and words used in the singular number include the plural number. The word "shall" is always mandatory and not merely directory.

a. Immediate – shall mean that the pet solid waste is removed at once, without delay.

b. Owner/Keeper – any person who shall possess, maintain, house or harbor any pet or otherwise have custody of any pet, whether or not the owner of such pet.

c. Person – any individual (including but not limited to a University student; visiting faculty member or other visitor; guest; professional member of the University's academic, administrative, or teaching staff; or other University officer, agent, or employee), corporation, company, partnership, firm, association, or political subdivision of this State whose conduct on University property is subject to regulation by the University.

d. Pet – a domesticated animal kept for amusement or companionship rather than utility.

e. Pet solid waste – waste matter expelled from the bowels of the pet; excrement.

f. Proper disposal – placement in a designated waste receptacle, or other suitable container, and discarded in a refuse container which is regularly emptied by the University or some other refuse collector; or disposal into a system designed to convey domestic sewage for proper treatment and disposal.

g. University - Garden State University.

h. University property – Lands and buildings owned or controlled by Garden State University.

III. Requirement for Disposal:

All pet owners and keepers are required to immediately and properly dispose of their pet's solid waste deposited on University property.

IV. Exemptions:

Any owner or keeper who requires the use of a disability assistance animal shall be exempt from the provisions of this regulation while such animal is being used for that purpose.

V. Violations:

a. Any University student who is found to be in violation of this regulation shall be subject to official warning, disciplinary probation, suspension, expulsion, or other sanctions in accordance with the University's Student Conduct Code.

b. Any University officer, staff member, employee, or agent who is found to be in violation of this regulation shall be subject to dismissal, removal, reduction of salary, suspension, demotion, or other disciplinary action in accordance with applicable New Jersey statutes and relevant contracts or agreements.

c. Any other person who has entered into a contract or agreement with the University to provide equipment, materials, supplies, or services on University property, and who is found to be in violation of this regulation, shall be subject to sanctions in accordance with the contract or agreement.

d. Any visitor, guest, or other person who is not identified under V.a, V.b, or V.c above, and who is found to be in violation of this regulation, is subject to ejection from University property and, if the person refuses to leave after being asked to leave, to prosecution for criminal trespass under N.J.S.A. 2C:18-3.

GARDEN STATE UNIVERSITY

Subject: Pets

Effective Date: _____, 200_

Approved by: _____

I. Purpose:

A regulation to prohibit pets at Garden State University, so as to protect public health, safety and welfare, and to prescribe penalties for failure to comply.

II. Definitions:

For the purpose of this regulation, the following terms, phrases, words and their derivations shall have the meanings stated herein unless their use in the text of this regulation clearly demonstrates a different meaning. When not inconsistent with the context, words used in the present tense include the future, words used in the plural number include the singular number, and words used in the singular number include the plural number. The word "shall" is always mandatory and not merely directory.

a. Owner/Keeper – any person who shall possess, maintain, house or harbor any pet or otherwise have custody of any pet, whether or not the owner of such pet.

b. Person – any individual (including but not limited to a University student; visiting faculty member or other visitor; guest; professional member of the University's academic, administrative, or teaching staff; or other University officer, agent, or employee), corporation, company, partnership, firm, association, or political subdivision of this State whose conduct on University property is subject to regulation by the University.

c. Pet – a domesticated animal kept for amusement or companionship rather than utility.

d. University - Garden State University.

e. University property – Lands and buildings owned or controlled by Garden State University.

III. Prohibited Conduct:

No person shall possess, maintain, house or harbor any pet or otherwise have custody of any pet on University property.

IV. Exemptions to Prohibition:

Any owner or keeper who requires the use of a disability assistance animal shall be exempt from the provisions of this regulation while such animal is being used for that purpose.

V. Violations:

a. Any University student who is found to be in violation of this regulation shall be subject to official warning, disciplinary probation, suspension, expulsion, or other sanctions in accordance with the University's Student Conduct Code.

b. Any University officer, staff member, employee, or agent who is found to be in violation of this regulation shall be subject to dismissal, removal, reduction of salary, suspension, demotion, or other disciplinary action in accordance with applicable New Jersey statutes and relevant contracts or agreements.

c. Any other person who has entered into a contract or agreement with the University to provide equipment, materials, supplies, or services on University property, and who is found to be in violation of this regulation, shall be subject to sanctions in accordance with the contract or agreement.

d. Any visitor, guest, or other person who is not identified under V.a, V.b, or V.c above, and who is found to be in violation of this regulation, is subject to ejection from University property and, if the person refuses to leave after being asked to leave, to prosecution for criminal trespass under N.J.S.A. 2C:18-3.

GARDEN STATE UNIVERSITY

Subject: Litter Control

Effective Date: _____, 200_

Approved by: _____

I. Purpose:

A regulation to prohibit littering at Garden State University, so as to protect public health, safety and welfare, and to prescribe penalties for the failure to comply.

II. Definitions:

For the purpose of this regulation, the following terms, phrases, words and their derivations shall have the meanings stated herein unless their use in the text of this regulation demonstrates a different meaning. When not inconsistent with the context, words used in the present tense include the future, words used in the plural number include the singular number, and words used in the singular number include the plural number. The word "shall" is always mandatory and not merely directory.

a. Litter - any used or unconsumed substance or waste material which has been discarded, whether made of aluminum, glass, plastic, rubber, paper, or other natural or synthetic material, or any combination thereof, including, but not limited to, any bottle, jar or can, or any top, cap or detachable tab of any bottle, jar or can, any unlighted cigarette, cigar, match or any flaming or glowing material or any garbage, trash, refuse, debris, rubbish, grass clippings or other lawn or garden waste, newspapers, magazines, glass, metal, plastic or paper containers or other packaging or construction material, but does not include the waste of the primary processes of mining or other extraction processes, logging, sawmilling, farming or manufacturing.

b. Litter Receptacle – a container suitable for the depositing of litter.

c. Person – any individual (including but not limited to a University student; visiting faculty member or other visitor; guest; professional member of the University's academic, administrative, or teaching staff; or other University officer, agent, or employee), corporation, company, partnership, firm, association, or political subdivision of this State whose conduct on University property is subject to regulation by the University.

d. University - Garden State University.

e. University property – Lands and buildings owned or controlled by Garden State University.

III. Prohibited Conduct:

No person shall throw, drop, discard or otherwise place any litter of any nature upon University property other than in a litter receptacle, or having done so to allow such litter to remain.

Whenever any litter is thrown or discarded or allowed to fall from a vehicle or boat in violation of this regulation, the operator or owner, or both, of the motor vehicle or boat shall also be deemed to have violated this regulation.

IV. Violations:

a. Any University student who is found to be in violation of this regulation shall be subject to official warning, disciplinary probation, suspension, expulsion, or other sanctions in accordance with the University's Student Conduct Code.

b. Any University officer, staff member, employee, or agent who is found to be in violation of this regulation shall be subject to dismissal, removal, reduction of salary, suspension, demotion, or other disciplinary action in accordance with applicable New Jersey statutes and relevant contracts or agreements.

c. Any other person who has entered into a contract or agreement with the University to provide equipment, materials, supplies, or services on University property, and who is found to be in violation of this regulation, shall be subject to sanctions in accordance with the contract or agreement.

d. Any visitor, guest, or other person who is not identified under IV.a, IV.b, or IV.c above, and who is found to be in violation of this regulation, is subject to ejection from University property and, if the person refuses to leave after being asked to leave, to prosecution for criminal trespass under N.J.S.A. 2C:18-3.

e. Any person who throws, drops, discards or otherwise places any litter of any nature upon University property other than in a litter receptacle is also subject to prosecution under applicable New Jersey statutes.

GARDEN STATE UNIVERSITY

Subject: Improper Disposal of Waste Into Storm Sewers on University Property

Effective Date: _____, 200_

Approved by: _____

I. Purpose:

A regulation to prohibit the spilling, dumping, or disposal of materials other than stormwater to the municipal separate storm sewer system (MS4) operated by Garden State University, so as to protect public health, safety and welfare, and to prescribe penalties for the failure to comply.

II. Definitions:

For the purpose of this regulation, the following terms, phrases, words, and their derivations shall have the meanings stated herein unless their use in the text of this regulation clearly demonstrates a different meaning. When not inconsistent with the context, words used in the present tense include the future, words used in the plural number include the singular number, and words used in the singular number include the plural number. The word "shall" is always mandatory and not merely directory.

a. Municipal separate storm sewer system (MS4) – a conveyance or system of conveyances (including roads with drainage systems, municipal streets, catch basins, curbs, gutters, ditches, manmade channels, or storm drains) that is owned or operated by Garden State University or other public body, and is designed and used for collecting and conveying stormwater.

   (Note: For public complexes that operate combined sewer systems, add the following: "MS4s do not include combined sewer systems, which are sewer systems that are designed to carry sanitary sewage at all times and to collect and transport stormwater from streets and other sources.")

b. Person – any individual (including but not limited to a University student; visiting faculty member or other visitor; guest; professional member of the University's academic, administrative, or teaching staff; or other University officer, agent, or employee), corporation (including Garden State University), company, partnership, firm, association, or political subdivision of this State whose conduct on University property is subject to regulation by the University.

c. Stormwater – water resulting from precipitation (including rain and snow) that runs off the land's surface, is transmitted to the subsurface, is captured by

separate storm sewers or other sewerage or drainage facilities, or is conveyed by snow removal equipment.

d. University - Garden State University.

e. University property – lands and buildings owned or controlled by Garden State University.

III. Prohibited Conduct:

All persons are prohibited while on University property from:

a. Spilling, dumping, or disposing of materials other than stormwater to the municipal separate storm sewer system operated by the University.

b. Spilling, dumping, or disposing of materials other than stormwater in such a manner as to cause the discharge of pollutants to the municipal separate storm sewer system operated by the University.

IV. Exceptions

a. Water line flushing and discharges from potable water sources
b. Uncontaminated ground water (e.g., infiltration, crawl space or basement sump pumps, foundation or footing drains, rising ground waters)
c. Air conditioning condensate (excluding contact and non-contact cooling water)
d. Irrigation water (including landscape and lawn watering runoff)
e. Flows from springs, riparian habitats and wetlands, water reservoir discharges and diverted stream flows
f. Residential car washing water, and residential swimming pool discharges
g. Sidewalk, driveway and street wash water
h. Flows from fire fighting activities
i. Flows from rinsing of the following equipment with clean water:
    1. Beach maintenance equipment immediately following their use for their intended purposes; and
    a. Equipment used in the application of salt and de-icing materials immediately following salt and de-icing material applications. Prior to rinsing with clean water, all residual salt and de-icing materials must be removed from equipment and vehicles to the maximum extent practicable using dry cleaning methods (e.g., shoveling and sweeping). Recovered materials are to be returned to storage for reuse or properly discarded.

    Rinsing of equipment in the above situations is limited to exterior, undercarriage, and exposed parts and does not apply to engines or other enclosed machinery.

V. Violations:

a. Any University student who continues to be in violation of this regulation, after being duly notified, shall be subject to official warning, disciplinary probation, suspension, expulsion, or other sanctions in accordance with the University's Student Conduct Code.

b. Any University officer, staff member, employee, or agent who continues to be in violation of this regulation, after being duly notified, shall be subject to dismissal, removal, reduction of salary, suspension, demotion, or other disciplinary action in accordance with applicable New Jersey statutes and relevant contracts or agreements.

c. Any other person who has entered into a contract or agreement with the University to provide equipment, materials, supplies, or services on University property, and who continues to be in violation of this regulation, after being duly notified, shall be subject to sanctions in accordance with the contract or agreement.

d. Any visitor, guest, or other person who is not identified under V.a, V.b, or V.c above, and who continues to be in violation of this regulation, after being duly notified, is subject to ejection from University property and, if the person refuses to leave after being asked to leave, to prosecution for criminal trespass under N.J.S.A. 2C:18-3.

e. Any person who violates this regulation may also be subject to prosecution under applicable New Jersey statutes.

GARDEN STATE UNIVERSITY

Subject: Wildlife Feeding Control

Effective Date: _____, 200_

Approved by: _____

I. Purpose:

A regulation to prohibit the feeding of unconfined wildlife at Garden State University, so as to protect public health, safety and welfare, and to prescribe penalties for failure to comply.

II. Definitions:

For the purpose of this regulation, the following terms, phrases, words and their derivations shall have the meanings stated herein unless their use in the text of this regulation clearly demonstrates a different meaning. When not inconsistent with the context, words used in the present tense include the future, words used in the plural number include the singular number, and words used in the singular number include the plural number. The word "shall" is always mandatory and not merely directory.

a. Feed – to give, place, expose, deposit, distribute or scatter any edible material with the intention of feeding, attracting or enticing wildlife. Feeding does not include baiting in the legal taking of fish and/or game.

b. Person – any individual (including but not limited to a University student; visiting faculty member or other visitor; guest; professional member of the University's academic, administrative, or teaching staff; or other University officer, agent, or employee), corporation, company, partnership, firm, association, or political subdivision of this State whose conduct on University property is subject to regulation by the University.

c. University - Garden State University.

d. University property – Lands and buildings owned or controlled by Garden State University.

e. Wildlife – all animals that are neither human nor domesticated.

III. Prohibited Conduct:

No person shall feed any unconfined wildlife on University property, except as part of academic research.

IV. Violations:

a. Any University student who is found to be in violation of this regulation shall be subject to official warning, disciplinary probation, suspension, expulsion, or other sanctions in accordance with the University's Student Conduct Code.

b. Any University officer, staff member, employee, or agent who is found to be in violation of this regulation shall be subject to dismissal, removal, reduction of salary, suspension, demotion, or other disciplinary action in accordance with applicable New Jersey statutes and relevant contracts or agreements.

c. Any other person who has entered into a contract or agreement with the University to provide equipment, materials, supplies, or services on University property, and who is found to be in violation of this regulation, shall be subject to sanctions in accordance with the contract or agreement.

d. Any visitor, guest, or other person who is not identified under IV.a, IV.b, or IV.c above, and who is found to be in violation of this regulation, is subject to ejection from University property and, if the person refuses to leave after being asked to leave, to prosecution for criminal trespass under N.J.S.A. 2C:18-3.

GARDEN STATE UNIVERSITY

Subject: Illicit Connections to the University's Storm Sewers

Effective Date: _____, 200_

Approved by: _____

I. Purpose:

A regulation to prohibit illicit connections to the municipal separate storm sewer system(s) operated by Garden State University, so as to protect public health, safety and welfare, and to prescribe penalties for the failure to comply. This regulation does not apply to any illicit connection which emanates from a location outside Garden State University property.

II. Definitions:

For the purpose of this regulation, the following terms, phrases, words, and their derivations shall have the meanings stated herein unless their use in the text of this regulation clearly demonstrates a different meaning. When not inconsistent with the context, words used in the present tense include the future, words used in the plural number include the singular number, and words used in the singular number include the plural number. The word "shall" is always mandatory and not merely directory. Most of the definitions below are the same as or based on corresponding definitions in the New Jersey Pollutant Discharge Elimination System (NJPDES) rules at N.J.A.C. 7:14A-1.2.

a. Domestic sewage - waste and wastewater from humans or household operations.

b. Illicit connection – any physical or non-physical connection that discharges domestic sewage, non-contact cooling water, process wastewater, or other industrial waste (other than stormwater) to the municipal separate storm sewer system operated by Garden State University, unless that discharge is authorized under a NJPDES permit other than the Public Complex Stormwater General Permit (NJPDES Permit Number NJ0141879). Non-physical connections may include, but are not limited to, leaks, flows, or overflows into the municipal separate storm sewer system.

c. Industrial waste - non-domestic waste, including, but not limited to, those pollutants regulated under Section 307(a), (b), or (c) of the Federal Clean Water Act (33 U.S.C. §1317(a), (b), or (c)).

d. Municipal separate storm sewer system (MS4) – a conveyance or system of conveyances (including roads with drainage systems, municipal streets, catch basins, curbs, gutters, ditches, manmade channels, or storm drains) that is owned or operated by Garden State University or other public body, and is designed and used for collecting and conveying stormwater.

   (Note: For public complexes that operate combined sewer systems, add the following: "MS4s do not include combined sewer systems, which are sewer systems that are designed to carry sanitary sewage at all times and to collect and transport stormwater from streets and other sources.")

e. NJPDES permit – a permit issued by the New Jersey Department of Environmental Protection to implement the New Jersey Pollutant Discharge Elimination System (NJPDES) rules at N.J.A.C. 7:14A

f. Non-contact cooling water - water used to reduce temperature for the purpose of cooling. Such waters do not come into direct contact with any raw material, intermediate product (other than heat) or finished product. Non-contact cooling water may however contain algaecides, or biocides to control fouling of equipment such as heat exchangers, and/or corrosion inhibitors.

g. Person – any individual (including but not limited to a University officer, agent, professional staff member, other employee, or student), corporation (including Garden State University), company, partnership, firm, association, or political subdivision of this State, whose conduct on University property is subject to regulation by the University.

h. Process wastewater - any water which, during manufacturing or processing, comes into direct contact with or results from the production or use of any raw material, intermediate product, finished product, byproduct, or waste product. Process wastewater includes, but is not limited to, leachate and cooling water other than non-contact cooling water.

i. Stormwater – water resulting from precipitation (including rain and snow) that runs off the land's surface, is transmitted to the subsurface, is captured by separate storm sewers or other sewerage or drainage facilities, or is conveyed by snow removal equipment.

j. University - Garden State University.

k. University property – lands and buildings owned or controlled by Garden State University.

III. Prohibited Conduct:

Garden State University and its officers, staff, agents, other employees, contractors, and students shall not discharge or cause to be discharged, through an illicit connection to the municipal separate storm sewer system operated by Garden State University, any domestic sewage, non-contact cooling water, process wastewater, or other industrial waste (other than stormwater).

IV. Violations:

a. Any University officer, staff member, employee, or agent who is found to be in violation of this regulation shall be subject to dismissal, removal, reduction of salary, suspension, demotion, or other disciplinary action in accordance with applicable New Jersey statutes and relevant contracts or agreements.

b. Any University student who is found to be in violation of this regulation shall be subject to official warning, disciplinary probation, suspension, expulsion, or other sanctions in accordance with the University's Student Conduct Code.

c. Any other person who has entered into a contract or agreement with the University to provide equipment, materials, supplies, or services on University property, and who is found to be in violation of this regulation, shall be subject to sanctions in accordance with the contract or agreement.

d. Any person who violates this regulation may also be subject to prosecution under applicable Federal or New Jersey statutes.

Chapter 3 - Public Notice

The Public Notice SBR requires compliance with all applicable State and local public notice requirements. The Department also recommends that Public Complexes (especially colleges and universities) more broadly include users, employees, and/or residents of the Public Complex, where appropriate, in developing, implementing, and reviewing the Stormwater Pollution Prevention Plan (SPPP). Such participation and involvement may substantially promote the success of this program.

WHAT IS REQUIRED?

Minimum Standard

Public Complexes shall comply with applicable State and local public notice requirements when providing for public participation in the development and implementation of the Public Complex's stormwater program.

Measurable Goal

Public Complexes shall certify annually that all applicable State and local public notice requirements were followed.

Implementation Schedule

Upon the effective date of permit authorization (EDPA).

WHAT DOES THIS MEAN?

This SBR means that the Public Complex must comply with any applicable State and local public notice requirements when a public involvement/participation program is being implemented in regard to the Public Complex's stormwater program. The permit requires the Public Complex to comply with requirements for public notice that are already in effect under law. For some Public Complexes, an example can include the public notice requirements in the Open Public Meetings Act ("Sunshine Law," N.J.S.A. 10:4-6 et seq.).

However, the Department recommends that Public Complexes, especially colleges and universities, go beyond the SBR to include users, employees, and/or residents of the Public Complex more broadly in developing, implementing, and reviewing the SPPP.

WANT TO KNOW MORE?

Public participation and involvement can be critical to the success of a Public Complex's stormwater program. Members of the public, especially users, employees, and/or residents of the Public Complex, who participate in the development and decision making process are more likely to take an active role in implementing this program and also serve as ambassadors to the program. In addition, reaching out to such persons and soliciting their involvement gives a Public Complex a broader base of knowledge to draw from and provides a conduit to other programs (e.g., watershed groups and other government programs). Opportunities for users and/or residents of the Public Complex to participate in program development and implementation include serving as representatives on a committee, attending public meetings, working as volunteers to educate other individuals about the program, assisting in program coordination with other pre-existing programs, or participating in volunteer monitoring efforts.

In order for public participation projects to be successful, the participants must feel as though they have done something worthwhile. There are a variety of ways in which this can be accomplished, including:

- Taking pictures of participants to create a pictorial record of their activities and/or publishing them in the local or campus newspapers;
- Distributing logo items such as T-shirts, hats, badges, plastic water bottles, or other items to participants; or
- Providing each participant with a certificate of appreciation and/or a letter of thanks signed by the President, or other ranking official or officer, of the Public Complex.

When participants are made to feel as though their contributions are worthwhile they will be encouraged to continue to participate and to take a more active role. The more members of the community that support and encourage the Public Complex's stormwater program, the more successful it will be.

Chapter 4 - Post-Construction Stormwater Management in New Development and Redevelopment

The Post-Construction Stormwater Management in New Development and Redevelopment SBR requires the Public Complex to develop, implement, and enforce a program that addresses stormwater runoff from certain new development and redevelopment projects that are at the Public Complex, and that discharge into the Public Complex's MS4.

WHAT IS REQUIRED?

Minimum Standard

To prevent or minimize water quality impacts, the Public Complex shall develop, implement, and enforce a program to address stormwater runoff from new development and redevelopment projects at the Public Complex that disturb one acre or more, including projects less than one acre that are part of a larger common plan of development or sale, that discharge into the Public Complex's small MS4. The Public Complex shall in its post-construction program:

i. Comply with the applicable design and performance standards established under N.J.A.C. 7:8 for major development at the Public Complex, unless:

- Those standards do not apply because of a variance or exemption granted under N.J.A.C. 7:8; or

- Alternative standards are applicable under an areawide or Statewide Water Quality Management Plan adopted in accordance with N.J.A.C. 7:15.

ii. Ensure adequate long-term operation and maintenance of BMPs at the Public Complex.

iii. Comply with standards set forth in Attachment C of the permit to control passage of solid and floatable materials through storm drainage inlets at the Public Complex.

iv. Projects that do not require any Department permits (the term "permit", in this case, shall include transition area waivers under the Freshwater Wetlands Protection Act) under the Flood Hazard Area Control Act (N.J.S.A. 58:16A-50 et seq.), Freshwater Wetlands Protection Act (N.J.S.A. 13:9B-1 et seq.), Coastal Area Facility Review Act (N.J.S.A. 13:19-1 et seq.), or Waterfront and Harbor Facilities Act (N.J.S.A. 12:5-3) are not considered "new development or redevelopment projects" if construction began prior to the implementation deadline for this SBR, or if the projects went to bid prior to the date on which the permittee received authorization under this permit.

Measurable Goal

Public Complexes shall certify annually that they have developed, implemented, and are actively enforcing a program to address stormwater runoff from new development and redevelopment projects at the Public Complex's small MS4 in accordance with the minimum standard.

Implementation Schedule

i. Upon the effective date of permit authorization, Public Complexes shall ensure adequate long-term operation and maintenance of BMPs on property owned or operated by the Public Complex.

ii. Within 12 months from the effective date of permit authorization, Public Complexes shall:

- Comply with the standards set forth in Attachment C of the permit to control passage of solid and floatable materials through storm drainage inlets for storm drain inlets the Public Complex installs within the Public Complex's small MS4.
- Adopt applicable design and performance standards established under N.J.A.C. 7:8 for major development at the Public Complex pursuant to item i. of the minimum standard.

WHAT DOES THIS MEAN?

To prevent or minimize pollution of surface waters and groundwater by stormwater runoff from certain new development and redevelopment projects, Public Complexes must develop, implement, and enforce a "post-construction program" to control post-construction stormwater runoff from these projects.

Many projects at the Public Complex that disturb one acre or more are subject to the New Development and Redevelopment Post-construction program.

The projects addressed under this SBR are new development and redevelopment projects, on property owned or operated by the Public Complex, that:

1. disturb one acre or more (including projects less than one acre that are part of a larger common plan of development or sale); and

2. discharge stormwater into the Public Complex's small MS4.

(**Note** - This SBR does not require Public Complexes to control post-construction stormwater runoff from new development and redevelopment on private or public property not owned or operated by the Public Complex, even though such runoff is discharged into the Public Complex's small MS4. Nor does this SBR require Public Complexes to control post-construction stormwater runoff from new development and redevelopment on Public Complex property if such runoff is not discharged into the Public Complex's small MS4.)

For the purpose of this SBR the following terms are defined as:

"Disturbance" means the placement of impervious surface or exposure and/or movement of soil or bedrock or clearing, cutting, or removing of vegetation.

"Impervious surface" means a surface that has been covered with a layer of material so that it is highly resistant to infiltration by water. Impervious surfaces include areas such as roadways, paved parking lots and concrete sidewalks.

"Redevelopment" refers to alterations that change the "footprint" of a roadway or other site or building in such a way that results in the disturbance of one acre or more of land. The term is not intended to include such activities as exterior remodeling, which would not be expected to cause adverse stormwater quality impacts and offer no new opportunity for stormwater controls. The Department does not consider pavement resurfacing projects that do not disturb the underlying or surrounding soil, remove surrounding vegetation, or increase the area of impervious surface to be "redevelopment projects."

"Common plan of development or sale" means a contiguous area where multiple separate and distinct development or redevelopment activities have occurred, are occurring, or are proposed to occur under one plan. The "plan" in a "common plan of development or sale" is broadly defined as any announcement or piece of documentation (including, but not limited to, a sign, public notice or hearing, advertisement, drawing, permit application) or physical demarcation (including, but not limited to, boundary signs, lot stakes, surveyor markings).

To develop, implement, and enforce this post-construction program, the Public Complex must meet requirements concerned with:

- The Department's **Stormwater Management rules (N.J.A.C. 7:8)**, which establish stormwater management design and performance standards for new development and redevelopment, and which are implemented through the Department's Land Use Regulation Program as well as the Public Complex Permit
- **Long-term operation and maintenance of BMPs**
- **Storm drain inlets**

Overview of the Stormwater Management Rules

On February 2, 2004, the Department's new Stormwater Management rules were published in the New Jersey Register and became effective (36 N.J.R. 670(a) and 781(a)). This is the first major update of these rules since their adoption in 1983, and includes fundamental changes in how systems and structures for managing stormwater runoff in New Jersey are planned, designed and implemented.

The new Stormwater Management rules provide a framework and incentives for managing runoff and resolving nonpoint source impairment on a drainage area basis for new development and redevelopment and existing developed areas, and establish a hierarchy for implementation of stormwater management measures with initial reliance on low impact site design techniques to maintain natural vegetation and drainage before incorporating structural BMPs. These new rules also establish new runoff control performance standards for groundwater recharge, water quality and water quantity; establish special area protection measures (buffers) for pristine and exceptional value ("Category One") waters; provide regulatory consistency among local and State regulatory agencies; and provide safety standards for stormwater management basins.

Public Complex officials involved with Public Complex development or redevelopment decisions, along with their consultants, need to become familiar with the new requirements in these rules; the guidance contained in the New Jersey Stormwater Best Management Practices Manual; and effective nonstructural stormwater management techniques, such as maintaining natural drainage paths and vegetation, and minimizing increases in impervious cover, that will preserve and protect water resources for the future.

A courtesy copy of these rules, answers to "**Frequently Asked Questions**," and the **New Jersey Stormwater Best Management Practices Manual** are available at www.njstormwater.org.

Questions or submissions regarding the **Stormwater Management rules** should be directed to the Division of Watershed Management, New Jersey Department of Environmental Protection, P.O. Box 418, Trenton, New Jersey 08625.

The new Stormwater Management rules have six subchapters as follows:

Subchapter 1. General Provisions

Subchapter 2. General Requirements for Stormwater Management Planning

Subchapter 3. Regional Stormwater Management Planning

Subchapter 4. Municipal Stormwater Management Planning

Subchapter 5. Design and Performance Standards for Stormwater Management Measures

Subchapter 6. Safety Standards for Stormwater Management Basins

Public Complexes are directly affected by subchapters 1, 5, and 6 of these new rules, and may also be directly affected by subchapters 2 and/or 3 if a regional stormwater management planning area includes all or part of the Public Complex, or if the Public Complex permittee (for example, a county) conducts stormwater management planning on its own initiative under these new rules. Several provisions of subchapter 5 are discussed further below.

Special water resource protection areas are established along all waters designated "Category One".

In addition, the Department amended (effective February 2, 2004) the stormwater management provisions of the following rules in order to coordinate with and cross-reference the new Stormwater Management rules: the Freshwater Wetlands Protection Act Rules at N.J.A.C. 7:7A; the Coastal Zone Management Rules at N.J.A.C. 7:7E; the Flood Hazard Area Control Act rules at N.J.A.C. 7:13; the Water Quality Management Planning rules at N.J.A.C. 7:15; and the Dam Safety Standards at N.J.A.C. 7:20. These amendments affect Public Complex projects that need stream encroachment permits or certain other Department permits.

Major Development

"Major development" is one of the most important terms in these new rules and this SBR. The design and performance standards in subchapter 5 apply to "major development" only. The "major development" regulated under this SBR is limited to development and redevelopment projects that disturb one or more acres of land. However, some other "major development" that does not disturb one or more acres of land, but that increases impervious surface by one-quarter acre or more, is subject to these new rules through (i) permits issued to Public Complexes under the Department's Land Use Regulation Program (LURP), which includes stream encroachment permits; freshwater wetlands permits and transition area waivers; and CAFRA, coastal wetlands, and waterfront development permits; and (ii) the Department's Dam Safety Standards permit-by-rule for Class IV dams (if the Public Complex designs or constructs a Class IV dam(s) for stormwater management purposes).

(**Note:** Under N.J.A.C. 7:8-1.6 ("Applicability to Major Development"), major development which has received certain Department LURP permits prior to February 2, 2004 is **not** required to comply with the new Stormwater Management rules, but instead shall be subject to the stormwater management requirements in effect on February 1, 2004. In addition, under item iv. of the minimum standard, Public Complex projects that do not require Department LURP permits are **not** considered "new development or redevelopment projects" if (1) construction began prior to 12 months after the date on which the Public Complex received authorization under the Public Complex Permit, or (2) if the projects went to bid prior to that authorization date.)

Design and Performance Standards for Major Development

As part of its post-construction program, the Public Complex must adopt and implement the applicable design and performance standards for major development established under N.J.A.C. 7:8, unless those standards do not apply because of a variance or exemption granted under N.J.A.C. 7:8, or unless alternative standards under a Water Quality Management Plan (WQM Plan) are applicable. (If such alternative standards are applicable, the Public Complex must adopt and implement them.)

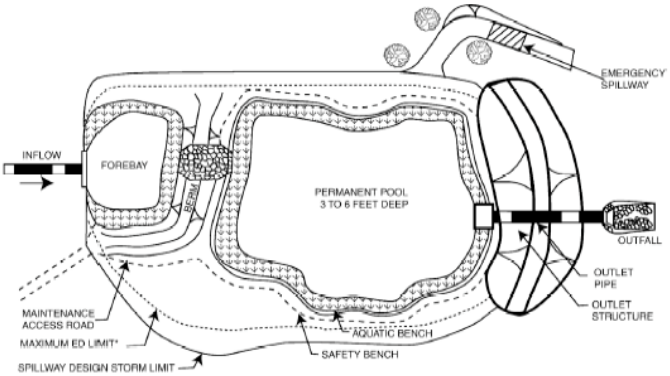

Wet Ponds may be used in some instances to meet runoff quality standards contained in N.J.A.C. 7:8-5.5.

As noted in the Department's Annual Report and Certification form for this SBR (see Chapter 13), the Public Complex must adopt the design and performance standards by means of a written document(s). Such a document could be, for example, a resolution, ordinance, regulation, order, or memorandum issued by the Public Complex's governing body, ranking elected official, principal executive officer, or duly authorized official, or a change to the Public Complex's policy and/or procedures manual, design manual, and/or stormwater manual. The Public Complex must provide the name and type of this document(s) in its Annual Report.

The Public Complex should use a document(s) appropriate for that Public Complex's institutional structure and procedures. The document(s) must either include a copy of the design and

performance standards, or incorporate those standards by reference. If the Public Complex already has its own procedures manual, design manual, and/or stormwater manual for project planning and design, the Public Complex should update that manual(s) to mention expressly those standards, the Public Complex Permit, and the standards set forth in Attachment C of the Public Complex Permit to control passage of solid and floatable materials through storm drainage inlets.

For each new development or redevelopment project that is regulated by the Public Complex Permit (and not exempted under N.J.A.C. 7:8-1.6(b)), the Public Complex must list the project in the Annual Report and Certification form for this SBR, and complete the Post-Construction Program Design Checklist for Individual Projects (see Chapter 13) before the Public Complex approves the project's construction. To the extent that compliance of the project with the applicable design and performance standards is addressed through the Department's Land Use Regulation Program, the final determination as to whether the project complies with those standards is made by the Department through that Program.

In the new Stormwater Management Rules, subchapter 5 establishes design and performance standards for "stormwater management measures" for "major development" intended to minimize the adverse impact of stormwater runoff on water quality and water quantity and loss of groundwater recharge in receiving water bodies.

"Stormwater management measure" is defined in these rules as "any structural or nonstructural strategy, practice, technology, process, program, or other method intended to control or reduce stormwater runoff and associated pollutants, or to induce or control the infiltration or groundwater recharge of stormwater or to eliminate illicit or illegal nonstormwater discharges into stormwater conveyances."

The standards specified in subchapter 5 do not apply to major development if alternative design and performance standards that are at least as protective as would be achieved through subchapter 5 when considered on a regional stormwater management area basis are applicable under a regional stormwater management plan adopted in accordance with N.J.A.C. 7:8 or a WQM plan adopted in accordance with N.J.A.C. 7:15.

Subchapter 5 consists of the following sections:

7:8-5.1 Scope

7:8-5.2 Stormwater management measures for major development

7:8-5.3 Nonstructural stormwater management strategies

7:8-5.4 Erosion control, groundwater recharge and runoff quantity standards

7:8-5.5 Stormwater runoff quality standards

7:8-5.6 Calculation of stormwater runoff and groundwater recharge

7:8-5.7 Standards for structural stormwater management measures

7:8-5.8 Maintenance requirements

7:8-5.9 Sources for technical guidance

Some of the most important new design and performance standards in subchapter 5 include:

- The requirements in N.J.A.C. 7:8-5.2 and 5.3 to incorporate the following **nonstructural stormwater management strategies** into the design:
    - Protect areas that provide water quality benefits or areas particularly susceptible to erosion and sediment loss;
    - Minimize impervious surfaces and break up or disconnect the flow of runoff over impervious surfaces;
    - Maximize the protection of natural drainage features and vegetation;
    - Minimize the decrease in the "time of concentration" from pre-construction to post-construction. "Time of Concentration" is defined as the time it takes for runoff to travel from the hydraulically most distant point of the drainage area to the point of interest within a watershed;
    - Minimize land disturbance including clearing and grading;
    - Minimize soil compaction;
    - Provide low-maintenance landscaping that encourages retention and planting of native vegetation and minimizes the use of lawns, fertilizers and pesticides;
    - Provide vegetated open-channel conveyance systems discharging into and through stable vegetated areas; and
    - Provide other source controls to prevent or minimize the use or exposure of pollutants at the site in order to prevent or minimize the release of those pollutants into stormwater runoff (see N.J.A.C. 7:8-5.3(b)9 and the New Jersey Stormwater Best Management Practices Manual for examples).
- The requirement in N.J.A.C. 7:8-5.2 to avoid adverse impacts of concentrated flow on habitat for **threatened and endangered species** as documented in the Natural Heritage Database established under N.J.S.A. 13:1B-15.147 through 15.150, particularly *Helonias bullata* (swamp pink) and/or *Clemmys muhlnebergi* (bog turtle).
- The provisions in N.J.A.C. 7:8-5.2 that **exempt** certain utility line and public pedestrian access projects from the groundwater recharge and stormwater runoff quantity and quality requirements at N.J.A.C. 7:8-5.4 and 5.5, and that allow a **waiver from strict compliance** with those requirements to be obtained for the enlargement (widening) of an existing public roadway or railroad or the construction or enlargement of a public pedestrian access.

Nonstructural stormwater management strategies include breaking up or disconnecting impervious surfaces.

- The standard in N.J.A.C. 7:8-5.4 to encourage and control **infiltration and groundwater recharge**, including requirements that the design engineer (except in certain specified circumstances) either:
    - Demonstrate through hydrologic and hydraulic analysis that the site and its stormwater management measures maintain 100 percent of the average annual pre-construction groundwater recharge volume for the site; **or**
    - Demonstrate through hydrologic and hydraulic analysis that the increase of stormwater runoff volume from pre-construction to post-construction for the two-year storm is infiltrated.
- The standard in N.J.A.C. 7:8-5.4 to control **stormwater runoff quantity impacts**.
    - This standard provides the design engineer with various alternatives, such as, for example, designing stormwater management measures so that the post-construction peak runoff rates for the two, 10 and 100-year storm events are 50, 75 and 80 percent, respectively, of the pre-construction peak runoff rates.
- The **"Stormwater runoff quality standards"** in N.J.A.C. 7:8-5.5, including:
    - The requirement (if at least an additional one-quarter acre of impervious surface is being proposed) that stormwater management measures be designed to reduce the post-construction load of **total suspended solids** (TSS) in stormwater runoff generated from the water quality design storm by 80 percent of the anticipated load from the developed site, expressed as an annual average. Table 2 in N.J.A.C. 7:8-5.5 presents the presumed TSS removal rates for certain BMPs designed in accordance with the New Jersey Stormwater Best Management Practices Manual.
    - The requirement that stormwater management measures be designed to reduce, to the maximum extent feasible, the post-construction **nutrient** load of the anticipated load from the developed site in stormwater runoff generated from the water quality design storm.
    - The requirement that the applicant preserve and maintain **300-foot "special water resource protection areas"** along all waters designated "Category One" in the Department's Surface Water Quality Standards at N.J.A.C. 7:9B, and along perennial or intermittent streams that drain into or upstream of the Category One waters as shown on the U.S. Geological Survey (USGS) Quadrangle Maps or in the County Soil Surveys, within the associated hydrologic unit code 14 (HUC14) drainage. All encroachments within such areas shall be subject to review and approval by the Department.
- The **maintenance requirements** in N.J.A.C. 7:8-5.8 (see the discussion below under "Maintenance Requirements - Stormwater Management Rules").

The requirement in the Public Complex Permit to "comply with the applicable design and performance standards established under N.J.A.C. 7:8" pertains to **all** applicable design and performance standards established under the Stormwater Management rules, not just to the "Stormwater runoff quality standards" in N.J.A.C. 7:8-5.5. Problems such as human-induced base-flow reduction (due to reduced recharge) and exacerbation of flooding and erosion also present water quality problems because they alter the chemical, physical, or biological integrity of the waters of the State, or otherwise contribute to water pollution.

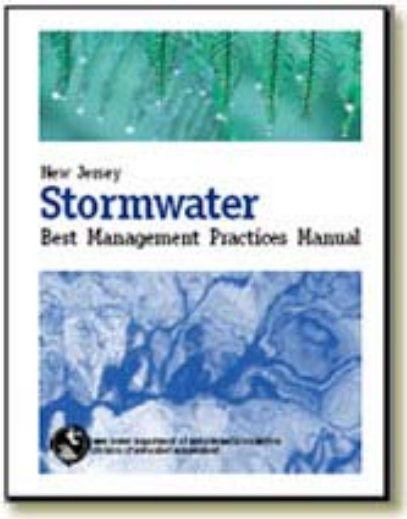

Technical and maintenance guidance for stormwater management measures can be found in the New Jersey Stormwater Best Management Practices Manual (BMP Manual) and other documents listed in N.J.A.C 7:8-5.9. The BMP Manual was developed by the New Jersey Department of Environmental Protection, in coordination with the New Jersey Department of Agriculture, the New Jersey Department of Community Affairs, the New Jersey Department of Transportation, municipal engineers, county engineers, consulting firms, contractors, and environmental organizations. A copy of the BMP manual can be found on the Department's Stormwater Web site at http://www.njstormwater.org. The BMP manual is also on the CD of guidance material provided by the Department to Public Complexes and from Maps and Publications, Department of Environmental Protection, 428 East State Street, P.O. Box 420, Trenton, New Jersey, 08625; telephone (609) 777-1038.

The Public Complex should consider the design and performance standards in subchapter 5 as early as possible in the project planning and design process (including any project scope development or feasibility assessment). Projects should be designed with stormwater issues and nonstructural stormwater management strategies addressed as a primary consideration early in that process, instead of as a secondary concern or afterthought. Early consideration may protect Public Complexes from additional time and expense associated with redesign, or from spending unnecessary time and resources on developing flawed project concepts that do not comply with the Public Complex Permit. Also, if the project requires but does not yet have an environmental assessment (EA) or environmental impact statement (EIS) under Executive Order No. 215 of 1989 or the National Environmental Policy Act, the relationship of the project to these standards and this SBR should be discussed in the EA or EIS prepared for the project.

Under N.J.A.C. 7:8-2.5, counties and other agencies that conduct stormwater management planning under the new Stormwater Management rules may petition the Department at the Division of Watershed Management address provided above for an exemption to the requirements of those rules by submitting documentation to demonstrate that, if granted, the exemption will not result in an increase in flood damage, water pollution, including threats to the biological integrity, or constitute a threat to the public safety. **The stormwater pollution prevention plan (SPPP) required by Part I, Section E of the Public Complex Permit is not a "stormwater management plan" under those rules.**

Training

The Department has provided and will continue to provide training to Public Complex officials on implementation of the new Stormwater Management rules. Training on the updated stormwater rule performance standards has occurred and will continue to occur by request from the Department directly and through the Rutgers Office of Continuing Education. Information on training opportunities will be made available on the Department's stormwater Web site at www.njstormwater.org and on the Rutgers Office of Continuing Education Web site at http://aesop.rutgers.edu/~ocpe/. Please call Rutgers at (732) 932-9271 and request that you be put on the mailing list to receive notice of upcoming training opportunities.

Operation and Maintenance of BMPs

As a part of the post-construction program, the Public Complex must ensure adequate long-term operation and maintenance of BMPs. This means that for any BMP that is installed in order to comply with the requirements of the Public Complex's post-construction program, the Public Complex must ensure adequate long-term operation as well as preventative and corrective maintenance (including replacement). The Public Complex may perform the operation and maintenance itself, or may make arrangements with other entities to perform the operation and maintenance.

Proper long term operation and maintenance of BMPs ensures that they continue to perform as intended.

As discussed above, the Public Complex must also adopt and implement applicable design and performance standards established under N.J.A.C. 7:8 for major development at the Public Complex pursuant to item i. of the minimum standard above. These standards include the maintenance requirements in N.J.A.C. 7:8-5.8 (see the discussion below under "Maintenance Requirements - Stormwater Management Rules"). These standards are also implemented through permits issued to Public Complexes under the Department's Land Use Regulation Program.

Note also that under the "Stormwater Facility Maintenance" component of the Solids and Floatable Controls SBR (discussed in Chapter 8 below), the Public Complex must develop and implement a stormwater facility maintenance program for cleaning and maintenance of **all** stormwater facilities operated by the Public Complex, including existing stormwater facilities not affected by the post-construction program. The operation and maintenance component of the post-construction program should be integrated as soon as possible with the development and implementation of that stormwater facility maintenance program.

Maintenance Requirements - Stormwater Management Rules

Among the most important design and performance standards in N.J.A.C. 7:8-5 are the maintenance requirements in N.J.A.C. 7:8-5.8. Discussed below are provisions in those requirements that are generally important to Public Complexes:

1. The design engineer shall prepare a maintenance plan for the stormwater management measures incorporated into the design of a major development.
2. The maintenance plan shall contain:
   - Specific preventative maintenance tasks and schedules
   - Cost estimates, including estimated cost of sediment, debris, or trash removal
   - The name, address, and telephone number of the person or persons responsible for preventative and corrective maintenance (including replacement).

   Maintenance guidelines for stormwater management measures are available in the New Jersey Stormwater Best Management Practices Manual (BMP Manual). If the maintenance

plan identifies a person other than the developer (for example, a public agency or homeowners' association) as having the responsibility for maintenance, the plan shall include documentation of such person's agreement to assume this responsibility, or of the developer's obligation to dedicate a stormwater management facility to such person under an applicable ordinance or regulation.

(**Note:** In the context of the Public Complex Permit, the "developer" is generally if not always the Public Complex itself. A "person other than the developer" might be, for example, a municipality.)

- N.J.A.C. 7:8-5.8 does not specifically assign the responsibility for maintenance of stormwater management measures to Public Complexes or other entities. Instead, the rule simply requires that the entity responsible for maintenance be specified. The decision whether and to whom a Public Complex assigns responsibility is a site-specific one based on the particular facts and circumstances involved. A Public Complex may choose to assume responsibility for maintenance, but it is not obligated to do so under this rule. The Public Complex is responsible under N.J.A.C. 7:8-5.8 for indicating the person or entity responsible for maintenance.

  The selection of BMPs, and the maintenance needs associated with the BMPs, should take into account the ability of the Public Complex or other future users to maintain the proposed stormwater facility. Guidance on the maintenance of specific BMPs is provided in the BMP Manual.

  (**Note:** Under the "Stormwater Facility Maintenance" component of the Solids and Floatable Controls SBR discussed in Chapter 8 below, the Public Complex must develop and implement a program for cleaning and maintenance of **all** stormwater facilities operated by the Public Complex. The Public Complex may not rely on another entity to perform such cleaning and maintenance unless Part I, Section D of the Public Complex Permit ("Sharing of Responsibilities") is satisfied.)

3. If the person responsible for maintenance identified under **(2)** above is not a public agency, the maintenance plan and any future revisions based on **(6)** below shall be recorded upon the deed of record for each property on which the maintenance described in the maintenance plan must be undertaken.

4. Preventative and corrective maintenance shall be performed to maintain the function of the stormwater management measure, including repairs or replacement to the structure; removal of sediment, debris, or trash; restoration of eroded areas; snow and ice removal; fence repair or replacement; restoration of vegetation; and repair or replacement of nonvegetated linings.

5. The person responsible for maintenance identified under **(2)** above shall maintain a detailed log of all preventative and corrective maintenance for the structural stormwater management measures incorporated into the design of the development, including a record of all inspections and copies of all maintenance-related work orders.

   - The maintenance plan and any revisions, as well as the maintenance record, must be maintained for the life of the stormwater management measures on the site. Maintenance logs for the most recent three years, as well as the maintenance plan and any revisions should remain available for review by public entities with jurisdiction over the activities on the site. If members of the public wish to review the maintenance plan or record, they should contact the Public Complex.

The Department is not requiring a specific format for the maintenance plan or the maintenance logs. Sample maintenance forms are available in the NJDEP Division of Water Resources "Ocean County Demonstration Study Stormwater Facilities Maintenance Manual," dated June 1989, and updated samples may be available in the future.

6. The person responsible for maintenance identified under **(2)** above shall evaluate the effectiveness of the maintenance plan at least once per year and adjust the plan (and, if applicable, the deed) as needed.

   - The Department recognizes that maintenance for each major development will vary depending on the stormwater management measures implemented within the development, and has provided guidance for maintenance measures in the BMP Manual, including the type and frequency of maintenance. The effective implementation of the maintenance is based on the implementation of the approved maintenance plan. The frequency of maintenance is to be documented on maintenance logs that are required for the stormwater management measures under **(5)** above.

7. The person responsible for maintenance identified under **(2)** above shall retain and make available, upon request by any public entity with administrative, health, environmental or safety authority over the site, the maintenance plan and the documentation required by **(5)** and **(6)** above.

(**Note:** In addition, under Part I, Section J.1 of the Public Complex Permit, Public Complexes shall make records required by the Public Complex Permit, including records of inspections, maintenance, and repairs required by the "Stormwater Facility Maintenance" component of the Solids and Floatable Controls SBR discussed in Chapter 8 below, available to the public at reasonable times during regular business hours (see N.J.A.C. 7:14A-18 for confidentiality provisions). Public Complexes that are subject to New Jersey's Open Public Records Act must also comply with that Act.)

The need for a maintenance plan, and implementation of that plan, cannot be overemphasized**.** The lack of maintenance is one of the major reasons for the failure of structural BMPs to provide the level of treatment for which they were designed. Basic maintenance procedures are contained in the BMP Manual. Unique or innovative maintenance procedures for those measures that are not specified in the BMP Manual may also be used.

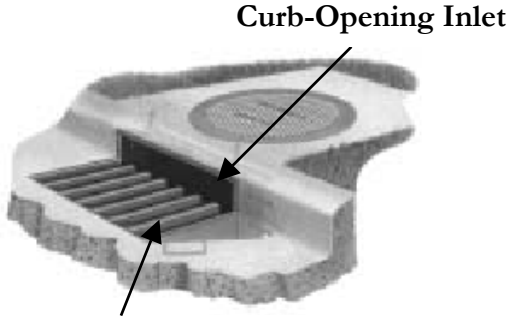

Storm Drain Inlets (New Development and Redevelopment)

For new development and redevelopment projects subject to this SBR, Public Complexes must comply with the design standard in Attachment C of the Public Complex Permit to control passage of solid and floatable materials through storm drain inlets. This design standard is addressed in the Annual Report and Certification form for this SBR, and in the Post-Construction Program Design Checklist for Individual Projects (see Chapter 13). There are separate design standards for grates in pavement or other ground surfaces, and for curb-opening inlets. Each standard is described below. These standards help prevent certain solids and floatables (e.g., cans, plastic bottles, wrappers, and other litter) from reaching the surface waters of the State.

Grates in Pavement or other Ground Surfaces

The standard applies to grates that are used in pavement or another ground surface to collect stormwater into a storm drain or surface water body under the grate.

NJDOT "Bicycle Safe" Grate

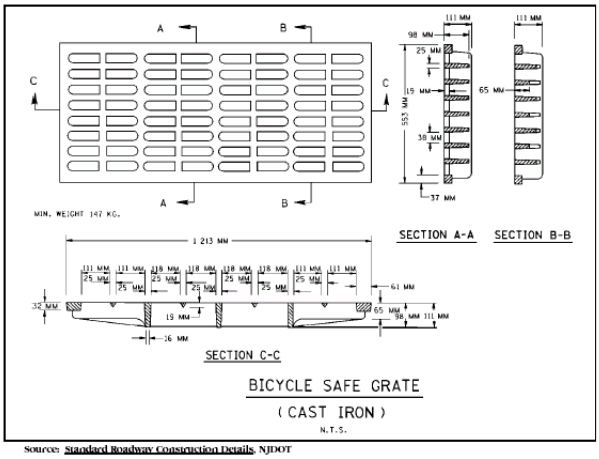

Source: Standard Roadway Construction Details, NJDOT

Examples of storm drain inlet grates subject to this standard include grates in grate inlets, the grate portion (non-curb-opening portion) of combination inlets, grates on storm sewer manholes, ditch grates, trench grates, and grates of spacer bars in slotted drains. Examples of ground surfaces include surfaces of roads (including bridges), driveways, parking areas, bikeways, plazas, sidewalks, lawns, fields, open channels, and stormwater basin floors.

Many grate designs meet the standard. The first option (especially for storm drain inlets along roads) is simply to use the New Jersey Department of Transportation (NJDOT) bicycle safe grate. This grate is described in Chapter 2.4 of the NJDOT Bicycle Compatible Roadways and Bikeways Planning and Design Guidelines, which is available at: http://www.state.nj.us/transportation/publicat/bike_guidelines.htm.

The other option is to use a different grate, as long as each "clear space" in the grate (each individual opening) is:

- No bigger than seven (7.0) square inches; or
- No bigger than 0.5 inches (½ inch) across the smallest dimension (length or width).

Curb-Opening Inlets (Including Curb-Opening Inlets in Combination Inlets)

If the storm drain inlet has a curb opening, the clear space in that curb opening (or each individual clear space, if the curb opening has two or more clear spaces) must be:

- No bigger than two (2.0) inches across the smallest dimension (length or width) - many curb-opening inlets installed in recent years meet this criterion; or
- No bigger than seven (7.0) square inches

Option 1 (Example)

A curb-opening with a “clear space” no bigger than 2” across the smallest dimension

Option 2 (Example)

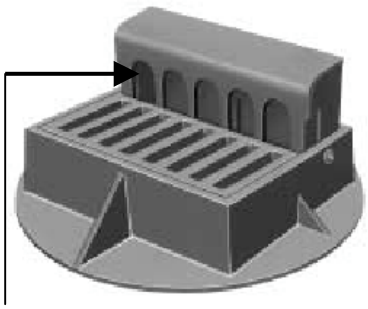

Each individual hole (“clear space”) in the curb-opening is no bigger than 7 square inches

Exemptions

The requirements of this standard do not apply whenever any of the following exemptions listed in Attachment C are applicable:

- A “Hydraulic Performance Exemption” where the review agency (generally, the Public Complex itself) determines that this standard would cause inadequate hydraulic performance that could not practicably be overcome by using additional or larger storm drain inlets that meet this standard.
- Either of two “Alternative Device Exemptions”:
  - The first of these exemptions is where flows from the “water quality design storm” as specified in N.J.A.C. 7:8 are conveyed through any device or combination of devices (e.g., end of pipe netting facility, manufactured treatment device, or a catch basin hood) that is designed, at a minimum, to prevent the passage of all solid and floatable materials that could not fit through one of the following:
    1. A rectangular space that is four and five-eighths ($4^5/_8$) inches long and one and one-half (1½) inches wide (this option does not apply for outfall netting facilities); or
    2. A bar screen that has a ½ inch (0.5 inches) opening between each bar.
  - The second of these exemptions is where flows are conveyed through a trash rack that has parallel bars with one-inch (1.0 inch) spacing between the bars, to the elevation of the “water quality design storm“ as specified in N.J.A.C. 7:8.

    One of the requirements in the new Stormwater Management rules at N.J.A.C. 7:8-5.7(a)2 is that “trash racks shall be installed at the intake to the outlet structure as appropriate, and shall have parallel bars with one-inch spacing between the bars to the elevation of the water quality design storm.” **This second “Alternative Device Exemption” will therefore be applicable to many new development and redevelopment projects.**

    In the new Stormwater Management Rules, the “water quality design storm” is specified at N.J.A.C. 7:8-5.5(a).

- A "Historic Places Exemption" where the Department determines, pursuant to the New Jersey Register of Historic Places Rules at N.J.A.C. 7:4-7.2(c), that action to meet this standard is an undertaking that constitutes an encroachment or will damage or destroy the New Jersey Register listed historic property.

WANT TO KNOW MORE?

Stormwater runoff from lands modified by urbanization can harm surface water and groundwater resources by changing natural hydrologic patterns, accelerating stream flows, destroying aquatic habitat, and elevating pollutant concentrations and loadings. These adverse environmental impacts can be more effectively prevented or minimized for new development and redevelopment projects (as required in this SBR) than for existing developed areas.

For a brief description of the hydrologic cycle and how development affects the cycle, see the "Stormwater Discussion" in the Department's Sample Municipal Stormwater Management Plan (Appendix C of the New Jersey Stormwater Best Management Practices Manual). For more detailed description of the adverse impacts that unmanaged land development can have on groundwater recharge and stormwater runoff quality and quantity both at and downstream of a development site, see Chapter 1, "Impacts of Development on Runoff," of the New Jersey Stormwater Best Management Practices Manual. That Chapter also reviews the fundamental physical, chemical, and biological aspects of the rainfall-runoff process and how they can be altered by development. In doing so, that Chapter demonstrates the need for the new Stormwater Management Rules at N.J.A.C. 7:8, which have been developed to directly address these adverse impacts. In addition, that Chapter seeks to increase understanding of these physical, chemical, and biological processes in order to improve the design of structural and non-structural measures mandated by the Rules' groundwater recharge, stormwater quality, and stormwater quantity requirements.

In regard to the design of storm drain inlets, every piece of solid or floatable material that is caught before it enters or leaves a storm drainage system will benefit the environment. Minimizing the size of spaces in storm drain inlet grates and curb openings will trap certain solid and floatable materials before they reach our waterways. However, these spaces must also be large enough to provide adequate hydraulic performance.

Several resources providing information related to this SBR were identified in the pages above. For convenience, some of these resources are also listed below:

- A courtesy copy of the new Stormwater Management Rules (N.J.A.C. 7:8), and answers to "Frequently Asked Questions" about those rules, are available at www.njstormwater.org.
- The New Jersey Stormwater Best Management Practices Manual is available at www.njstormwater.org and from Maps and Publications, Department of Environmental Protection, 428 East State Street, P.O. Box 420, Trenton, New Jersey, 08625; telephone (609) 777-1038. This Manual is also on the CD of guidance material provided by the Department to Public Complexes.

Chapter 5 - Local Public Education

This SBR consists of a requirement for a Local Public Education Program that applies to colleges, universities, and military bases only, and a requirement for a storm drain inlet labeling program that applies to all Public Complexes.

Informational brochures educate users and residents of a Public Complex on what they can do to improve water quality.

The Local Public Education Program component of this SBR requires certain Public Complexes to educate their users and/or residents on the impact of their day to day activities on stormwater quality. Topics include things such as proper use and disposal of fertilizers and pesticides, using native or well-adapted vegetation that requires little or no fertilization, and properly disposing of pet wastes, used motor oil and household hazardous wastes. In addition, the Local Public Education Program may include information on how users and/or residents can become involved in local stream and/or shoreline restoration activities, as well as activities that are coordinated by local youth service and conservation corps or other citizen groups. The Division of Watershed Management, Office of Outreach and Education offers numerous materials and programs that can assist Public Complexes in developing and implementing a Local Public Education program. Information on these programs and educational materials can be found on the Department's Division of Watershed Management website at www.state.nj.us/dep/watershedmgt. The Department will also provide supplemental educational information on a compact disk supplied to each Public Complex that can be used to expand the Local Public Education Program. All other Public Complexes satisfy this educational component of the permit through the implementation of an employee training program pursuant to Part I, Section F.9 of the permit.

Local Public Education Program

(Colleges, Universities, and Military Bases only)

WHAT IS REQUIRED?

Minimum Standard

The Local Public Education Program for colleges, universities, and military bases shall describe how those entities will distribute educational information to appropriate users and employees of the Public Complex and specifics on how educational activities will be conducted, including the educational event (colleges and university only), to satisfy this minimum standard. The following SBR and/or BMP topics shall be included in the Local Public Education Program:

- Stormwater/Nonpoint Source Education – impact of stormwater discharges on surface and ground waters of the State and steps that the public can take to reduce pollutants in stormwater runoff.
- Storm Drain Inlet Labeling – hazards of dumping materials into the storm drain, and fact

that storm drains are usually connected to water bodies and do not receive treatment.

- Fertilizer/Pesticide Education –proper application, storage and disposal of pesticides and fertilizers, and the benefits of using native or well adapted vegetation that requires little or no fertilization.
- Waste Disposal Education – identification, proper handling and proper disposal of wastes (including the locations of hazardous waste collection facilities in the area) and the hazards associated with illicit connections and improper disposal of waste.
- Pet Waste Control – information regarding the pet waste control mechanism and the benefits of proper disposal of pet waste.
- Litter Control - information regarding litter control and fines associated with littering.
- Improper Disposal of Waste Control - information regarding the improper disposal of waste control mechanism.
- Wildlife Feeding Control - information regarding the wildlife feeding prohibition.
- Vegetative Waste - information regarding home composting and yard waste recycling.

Colleges, universities, and military bases shall provide for the duplication and annual mailing (or other means of delivery) to all users and employees of the Public Complex of the informational brochure provided by the Department. The Department will provide each college, university, and military base with a brochure each year. The informational brochure covers all the topics above. The Department may periodically provide the Public Complex with an updated brochure for duplication and distribution.

As part of this program, colleges and universities shall also conduct each year, at minimum, one education effort in the form of an "event." An event may be an activity established primarily to satisfy this requirement or may be part of a bigger existing event such as homecoming celebration, fairs, or an Earth Day celebration. During this event, the informational brochure shall also be made available to the users and employees of the Public Complex.

All other Public Complexes satisfy the educational component of the permit through the implementation of an employee training program pursuant to Part I, Section F.9 of the permit.

Measurable Goal

Public Complexes (if applicable) shall certify annually that they have met the Local Public Education Program minimum standard, and if applicable, shall provide the date that the annual event was held and a description of the event.

Implementation Schedule

Within 12 months from the effective date of permit authorization, Public Complexes (if applicable) shall have developed and begun implementing the Local Public Education Program minimum standard.

WHAT DOES THIS MEAN?

Certain Public Complexes shall develop and implement a Local Public Education Program that includes all of the SBRs that have an educational message. The annual distribution of information is only required for colleges, universities and military bases. The annual event is only required for colleges and universities. All other Public Complexes satisfy the educational component of the permit through the implementation of an employee training program.

Annual Distribution of Information

Colleges, universities and military bases are required to duplicate and mail (or otherwise distribute) the educational brochure (provided by the Department and found at the end of this Chapter) annually to their users and employees. (Guests and visitors are not considered "users" for purposes of this requirement.) The Department may choose to periodically provide an updated version of this brochure, which shall then be duplicated and distributed annually.

Annual Event

As a part of the Local Public Education Program, colleges and universities are required to conduct or participate in an annual event during which educational materials are to be distributed. The annual event may be its own event or it can be a part of an existing event, for example, an Earth Day, Arbor Day or Fourth of July celebration. Or the annual event may be part of a larger event conducted by another entity in the area like a county fair or Agricultural Field Day, as long as users, residents, and employees are welcome to attend. During this event, the educational brochure provided by the Department shall be made available to the public.

Your annual event can be part of an existing Earth Day celebration.

WANT TO KNOW MORE?

It is estimated that up to 60% of our existing water pollution problems are attributable to **stormwater/nonpoint pollution**. This pollution can often be linked to our daily activities and lifestyles - things like walking pets, washing cars, changing motor oil, fertilizing the lawn, and littering. When it rains, pollutants from these activities can be washed into storm drains and eventually flow into New Jersey's surface and ground waters. These pollutants can contaminate our drinking water, as well as degrade aquatic populations and habitats and beaches.

Many people and institutions use fertilizers and pesticides to enhance their lawns and gardens. However, if they are not careful, such use can contaminate stormwater through pesticide (including herbicide and insecticide) and fertilizer runoff, and soil erosion. In many cases, this stormwater flows directly or indirectly into local rivers, lakes, reservoirs, streams, and coastal water bodies. When pesticides are introduced into an aquatic ecosystem they can harm or kill aquatic life, cause population decreases by damaging the food chain, decreasing reproductive success, or reduce the oxygen levels in the water by destroying plant populations and by plant decomposition. When used improperly, pesticides can also denude an area of vegetation, which can result in soil erosion. Overfertilization can also have adverse effects on an ecosystem. As surface runoff carries excess fertilizer into the water, the nutrient levels increase, leading to excessive plant and algal growth which is directly related to a loss of habitat and wildlife, including fish kills, and eutrophication. Eutrophication is water pollution caused by excessive plant nutrients. High nutrient concentrations can stimulate blooms of algae (e.g., phytoplankton) eventually causing some species to be choked out. Eutrophication can permanently change the character of a lake by increasing the organic content, eventually converting it into marsh and land areas.

One way to help prevent overfertilization and excessive pesticide use is to educate the people on how to properly store, handle and apply fertilizers and pesticides, and to make them aware of the need for soil testing and how to do it properly. Soil testing is a very important step in responsible fertilizer application to determine what nutrients, if any, are needed.

For more information on fertilizer use, pest identification and soil testing, contact your local agriculture extension service. A copy of the *Citizen's Guide to Pest Control and Pesticide Safety,* and other information on pesticide control and use can be found on the Pesticide Control Program of New Jersey's website at www.pcpnj.org.

The **improper disposal of hazardous wastes** can also impact stormwater, ground water and surface water quality. Many of the products found in homes, institutions, and businesses (including automotive wastes) contain chemicals that are harmful to people and the environment. These can include things like oven cleaners, floor care products, drain cleaners, spot removers, paint, solvents, fluorescent lights, motor oil, battery acid and lead, engine cleaner, antifreeze, rust preventative, and degreasers. These products may contain petroleum hydrocarbons, lye, phenols, trichlorobenzene, and other toxic, flammable, or corrosive chemical components, all of which may be introduced into the environment if not properly disposed. When such wastes are deliberately or inadvertently discharged into the storm drain (e.g., dumping of used motor oil, flushing of radiator coolant) they can have a significant impact on stormwater quality. Disposing these wastes directly onto the ground can impact ground water quality and disposing of them into a septic system can impact ground water quality and destroy helpful bacteria in the septic system. When hazardous wastes are discharged into the sewer system they may destroy bacteria used for treatment at the sewage treatment plant (STPs). In addition, STPs are not designed to treat hazardous wastes, which pass through the plant, and are consequently discharged to surface water. Additional information on household hazardous wastes (including information on each county's hazardous waste collection programs) may be found at the Association of New Jersey Household Hazardous Waste Coordinators website at:

http://www.njhazwaste.com/index.htm

Recommendations

Listed below are some activities and resources that can be used to assist in developing a Local Public Education Program. These resources are not required to be used by the permit, however, the colleges, universities or military bases may choose to use them, or encourage users, residents and employees to use them, to enhance the success of their Local Public Education Programs.

Public Complex Level

- Develop and maintain a web page containing appropriate downloadable information regarding required public education aspects of the stormwater program.
- Make information sheets available year-round at appropriate facilities.
- Conduct appropriate workshops, seminars, and/or presentations at the annual event and/or at other events (e.g., student assemblies, meetings, etc.).
- At the annual event and/or at other events, provide appropriate magnets, bookmarks, pencils, buttons, t-shirts, etc. to the users and employees of the Public Complex.

Individual Level

- Wash your vehicle only when necessary – consider using a commercial car wash that recycles its wash water. If you wash your car at home use a non-phosphate detergent and wash it on the lawn. This will help prevent detergents and car grime from entering the drain and ending up in our waterways.

- Service your vehicle regularly – this will prevent oils and other fluids from leaking onto the pavement so they don't wash into the storm drains.
- Don't pour motor oil, antifreeze or other chemicals down the sink or on the ground – dispose of them on collection days or recycle them by taking them to a local public or private recycling center. One quart of motor oil dumped down a storm drain can create a two-acre oil slick.
- Compost leaves and grass clippings, or leave them on the lawn – this will return valuable nutrients to the soil and result in lower fertilization requirements (see Chapter 6 – Yard Waste Collection Program – Want to Know More?). Fact sheets and Bulletins on composting are available at the Rutgers Cooperative Extension website at:

  http://www.rce.rutgers.edu/pubs/subcategory.asp?cat=5&sub=36
- Use environmentally responsible, phosphate free cleaning products (e.g., baking soda, vinegar, etc.).

Education Resources

Project WET is a nationally renowned program that offers teachers a better understanding about the world's water resources through hands-on, multi-disciplinary lessons. Project WET teaches the importance and value of water in our everyday life with formal and non-formal educators while offering specialized programs about New Jersey's water resources and watersheds. NJ Project WET focuses on water supply, nonpoint source education, water conservation, watershed management, land use planning and wetlands. Additionally, the program offers a Water Festival Grant Program. The festivals offer participants a series of learning stations that examine water use over time, water's role in shaping our country, what a watershed is, how water is cleaned and used again, etc. The festivals involve both the community and schools. Finally, NJ Project WET offers a Watershed Stewards Program for high school students. This program prepares young people to initiate and implement a community watershed service project that will address an environmental concern. More information on NJ Project WET can be found on the Department's website (Division of Watershed Management) at http://www.state.nj.us/dep/watershedmgt.

New Jersey Watershed Ambassadors Program is a community-oriented Americorps environmental program designed to raise awareness about watershed issues in New Jersey. Through this program, Ambassadors are placed in watershed management areas across the state to serve their local communities. The program works to improve water quality by exploring the relationship between people and the environment, nurturing community-based environmental activities and empowering residents to make responsible and informed decisions regarding their watershed. Ambassadors conduct water quality monitoring, initiate community-based nonpoint source service projects and conduct nonpoint source education programs using hands-on activities and models such as Enviroscape.

NJ Watershed Ambassadors can help organize and implement:

- Stream or Shoreline Cleanups – to remove trash and debris from in and around the stream. These items are not only potential pollution sources, but they can also block the flow of the stream, which can increase flooding and erosion.
- Stream or Shoreline Surveys – walk or boat the waterway to identify potential problems along the shoreline or stream channel. While surveying the stream or shoreline look for

things like fish and wildlife present, visible erosion, sewage overflow points, fish migration barriers, etc.

- Volunteer Plantings – plant native or well-adapted trees and shrubs in a watershed to help restore a healthy stream environment. Plantings will help to improve local water quality by preventing erosion, slowing stormwater runoff, and by providing food and shelter for wildlife.

More information on the NJ Watershed Ambassador program may be found at http://www.nj.gov/dep/watershedmgt/ambassadors_index.htm.

Storm Drain Inlet Labeling

WHAT IS REQUIRED?

Minimum Standard

Public Complexes shall establish a storm drain inlet labeling program and label all storm drain inlets within the Public Complex that are along streets with sidewalks. Public Complexes shall also label all storm drain inlets within plazas, parking areas, or maintenance yards that are operated by the Public Complex. The program shall establish a schedule for labeling, develop a long term maintenance plan, and when possible, coordinate efforts with users of the Public Complexes, watershed groups and volunteer organizations.

Examples of appropriate storm drain inlet labels

Measurable Goal

Public Complexes shall certify annually that a storm drain inlet labeling program has been developed or is being implemented, and shall identify the number of storm drain inlets labeled within the year.

Implementation Schedule

Within 12 months from the effective date of permit authorization, Public Complexes shall develop a labeling program for the storm drain inlets identified in the minimum standard. Public Complexes must either:

- Label a minimum of 50% of the storm drain inlets within 36 months from the EDPA; and label all remaining storm drain inlets on or before 60 months from EDPA; or
- Divide the Public Complex into two sectors for the purposes of storm drain inlet labeling and include a map of the two sectors in the SPPP. Label the storm drain inlets in one sector within 36 months from the EDPA; and label all remaining storm drain inlets on or before 60 months from EDPA.

WHAT DOES THIS MEAN?

The storm drain inlet labeling program, generally undertaken by local volunteer groups in cooperation with the Public Complex, involves labeling storm drain inlets with a cautionary message about dumping pollutants. The Public Complex is responsible for placing a label with such a message on or adjacent to all of the storm drain inlets that are along streets with sidewalks, and all

storm drains within plazas, parking areas, or maintenance yards that are operated by the Public Complex. The message may be a short phrase such as "The Drain is Just for Rain," "Drains to [Local Waterbody]," "No Dumping. Drains to River," "You Dump it, You Drink it. No Waste Here," or it may be a graphic such as a fish. Although a stand-alone graphic is permissible, the Department strongly recommends that a short phrase accompany the graphic. These labels serve as a reminder to individuals that the storm sewer system connects to local surface and/or ground water bodies and that pollutants that enter via this pathway will ultimately end up in those water bodies.

WANT TO KNOW MORE?

People may not be aware that water in storm sewers is not treated at sewage treatment plants before it reaches its ultimate destination. Additionally, some individuals view storm sewers as trash receptacles for general trash, used oil from automobiles, leftover paint and herbicides, and various other pollutants. The storm drain inlet labeling program provides an opportunity to educate the public about the connection between storm sewers and local water bodies.

A key factor in the success of this program is visibility. Publicity can play a major role in bringing the issue of nonpoint source pollution into light by announcing and covering the labeling event. Another effective device is to place signs and door hangers within the Public Complex announcing the event and explaining its objectives.

Public participation, through volunteer groups such as environmental organizations, or school groups, is beneficial to the program and shall be used when possible. However, since storm drains are Public Complex property, an alternative could be for the Public Complex to perform the labeling work, although, this lacks the public participation element which lends itself to education. Another option is to have the work overseen by the Public Complex but carried out by volunteers to ensure adherence to permit and safety requirements.

Most people, when informed that the storm sewer discharges to the surface or ground water, will not use the storm sewer as a trash can. Education, especially of young children, continues to pay benefits into the future. The storm drain inlet label stimulates interest in the subject matter of stormwater quality and nonpoint pollution control. Once there is that interest, the rest of the message is easier to convey. Surveys continue to show that the environment, and especially water quality, is a top concern of New Jersey residents. The storm drain inlet labeling program addresses those residents' concerns, shows an effort to improve water quality, and starts the education process that will last a lifetime. For more information on how to plan and implement a Storm Drain Inlet Labeling program, go to the Department's website (Division of Watershed Management) at www.state.nj.us/dep/watershedmgt. The Division of Watershed Management has produced a manual that will assist you in planning your storm drain inlet labeling program.

Recommendations

The following recommendation may be beneficial, but is not required by the permit.

- Since storm drain inlet labeling is an effective educational tool, and due to the relatively low cost involved, it is recommended that all storm drain inlets operated by the Public Complex be labeled. Keep in mind that the labeling can be completed by volunteers.

Chapter 6 - Improper Disposal of Waste

The Improper Disposal of Waste Statewide Basic Requirement (SBR) focuses on the proper disposal of wastes such as pet waste, litter, leaves, and other yard wastes. When they are disposed of improperly, they become a significant source of stormwater pollution. The Best Management Practices (BMPs) discussed below, when implemented together, may significantly reduce the addition of nutrients, disease causing microorganisms (pathogens), solids and other pollutants to receiving waters in a cost-effective manner.

Most of the BMPs found in this section require the adoption and enforcement of a regulatory mechanism. The appropriate type of regulatory mechanism (for example a resolution, ordinance, or regulation) and enforcement method (for example, fines; student, employee, or military disciplinary action; ejection from the Public Complex) will depend on the Public Complex's enabling legislation and institutional structure and procedures, and on the type of person against whom enforcement action is taken (for example, employee, student, soldier, visitor). Example regulatory mechanisms for each BMP can be found in **Chapter 2 - Stormwater Pollution Prevention Plan and Example Forms**. These example regulatory mechanisms are to assist in developing your own regulatory mechanisms, and are based on enabling legislation for most New Jersey state colleges and universities. A Public Complex may change the example regulatory mechanisms to fit their individual needs, but should ensure that their change doesn't prevent the regulatory mechanism from meeting the permit minimum standard. If your Public Complex already has a regulatory mechanism in place that meets the requirements of the permit, a new or modified regulatory mechanism is not required. However, if the regulatory mechanism does not meet the minimum standard of the permit, then the regulatory mechanism has to be modified accordingly. Your legal counsel should review all regulatory mechanisms.

Pet Waste

WHAT IS REQUIRED?

Minimum Standard

Public Complexes shall adopt and enforce an appropriate regulatory mechanism that requires pet owners or their keepers to immediately and properly dispose of their pet's solid waste deposited on property operated by the Public Complex or shall prohibit pets (other than disability assistance animals) from being allowed at the Public Complex.

Measurable Goal

Public Complexes shall certify annually that they have met the Pet Waste Control minimum standard.

You must clean up after your pet.

Implementation Schedule

Within 18 months from the effective date of permit authorization, Public Complexes shall have fully implemented the Pet Waste Control minimum standard.

WHAT DOES THIS MEAN?

Public Complexes must adopt and enforce a regulatory mechanism to ensure that pet owners and keepers (walkers or pet sitters) immediately and properly dispose of their pet's solid waste deposited on property operated by the Public Complex. This means that someone walking a pet needs to immediately pick up after the pet and properly dispose of the solid waste. They can do this by either flushing the pet waste or disposing of it in the trash. The Public Complex also has the option of prohibiting pets, other than disability assistance animals, from being allowed at the Public Complex at all.

Regulatory mechanisms and the threat of fines are often not enough to make people clean up after their pets. Therefore, it is important to educate the public about the regulatory mechanism and the environmental benefit on water quality. For a copy of the Pet Waste brochure, please refer to www.njstormwater.org.

WANT TO KNOW MORE?

Pet waste can be a significant source of organic pollutants and pathogens. When pet waste is left on yards, sidewalks and streets and is not properly disposed of, it can be carried into storm drains by rain during storm events. Most storm drains are not connected to sewage treatment plants, but drain directly to local water bodies. By controlling pet waste, pollutant loading entering these surface waters is reduced. Such pollutants include oxygen demanding substances, nitrogen and phosphorous, and pathogens. Pet waste uses up oxygen in the decay process, which in turn can harm aquatic animals and degrade overall water quality. Nitrogen and phosphorous are nutrients that can overstimulate weed and algal growth in slow moving water bodies and coastal waters. Pathogens in pet waste include protozoa, parasites and bacteria. It is estimated that about 95 percent of the fecal coliform in urban stormwater are of non-human origin. A Seattle study showed that leaking sewer lines were initially suspected but "animals, particularly household pets, were the culprits." In addition, "it has been estimated that for watersheds of up to 20 square miles draining to small coastal bay, 2-3 days of droppings from a population of about 100 dogs would contribute enough bacteria and nutrients to temporarily close a bay to swimming and shellfishing." [1, 2, 3] As a result of the impact of animal waste on water quality, regulatory mechanisms requiring pet owners and keepers to immediately clean up after their pets, makes simple environmental sense.

Recommendations

To make your pet waste regulatory mechanism more effective, the following recommendations have been provided by the Department. These recommendations may be beneficial, but are not required by the permit.

- Provide pet waste stations with pet waste removal bags and dedicated trash cans.
- Place educational posters about pet waste in highly traveled corridors or buildings.

References

1. Alderserio, K.D. Wait and M. Sobsey. 1996. Detection and characterization of male-specific RNA coliphages in a New York City reservoir to distinguish between human and non-human sources of contamination. In *Proceedings of a Symposium on New York City Water Supply Studies,* ed. Mcdonnell et al. TPS-96-2. American Resources Association. Herndon, VA.
2. Trial, W. et al. 1993. Bacterial source tracking: studies in an urban Seattle watershed. *Puget Sound Notes* 30:1-3.
3. USEPA. 1993. Guidance Specifying Management Measures for Sources of Nonpoint Pollution in Coastal Waters. U.S. Environmental Protection Agency, Office of Water, Washington, DC.

Litter

Litter on our streets ends up as litter on our beaches.

WHAT IS REQUIRED?

Minimum Standard

Public Complexes shall adopt and enforce an appropriate regulatory mechanism regarding the control of litter or enforce the existing State litter statute (N.J.S.A. 13:1E-99.3).

Measurable Goal

Public Complexes shall certify annually that they have met the Litter Control minimum standard.

Implementation Schedule

Within 18 months from the effective date of permit authorization, Public Complexes shall have fully implemented the Litter Control minimum standard.

WHAT DOES THIS MEAN?

Public Complexes must either adopt and enforce their own litter regulatory mechanism, or enforce the State litter statute, to help prevent the discharge of litter such as fast food wrappers, soda cans and bottles, and other trash into MS4s. (Only the State or a municipality may institute proceedings to enforce the State litter statute.) This SBR applies only to littering on property operated by the Public Complex.

WANT TO KNOW MORE?

Litter is a significant pollutant, especially in urban areas where large volumes of trash are generated. "Litter," as defined in N.J.S.A. 13:1E-215, "means any used or unconsumed substance or waste material which has been discarded, whether made of aluminum, glass, plastic, rubber, paper, or other natural or synthetic material, or any combination thereof, including, but not limited to, any bottle, jar, or any top, cap or detachable tab of any bottle, jar or can, any unlighted cigarette, cigar, match or any flaming or glowing material or any garbage, trash, refuse, debris, rubbish, grass clippings, or other lawn or garden waste, newspapers, magazines, glass, metal, plastic or paper containers or other packaging or construction material, but does not include the waste of the primary processes of mining or other extraction processes, logging, sawmilling, farming or manufacturing."

Litter is a serious problem in many states, but even more so in a state as densely populated and heavily traveled as New Jersey. It is the Department's duty to promote and encourage a clean and safe environment for future generations. Litter not only poses a threat to public health and safety, but also plays a large role in a Public Complex's aesthetic appearance, which in turn can play a part in the economics and image of that Public Complex. An attractive community creates an environment in which people will want to live, work and visit, and encourages companies considering relocation.

Waterfowl trapped in a six-pack ring. Photo: Bill Burton

Littering can significantly impact receiving waters. Litter, such as fast food wrappers, soda cans and bottles, and other trash, if not properly disposed, could eventually end up in our lakes, streams, and oceans. When litter reaches these surface water bodies, it not only causes problems aesthetically, but it can also have a negative impact on marine and other wildlife. For example, birds can easily become stuck in plastic 6-pack rings, marine mammals and sea turtles often choke on plastic bags that they mistake for jellyfish, and many sharks have been found with aluminum cans in their digestive systems. Issuing and actively enforcing litter regulatory mechanisms or the State litter statute is a cost effective means of preventing litter and floatables from reaching waters of the State.

Recommendations

The following recommendations are provided by the Department to help make your stormwater program more successful, but are not required by the permit.

- Put additional "No Litter" signs and additional trash receptacles, recycling containers, and cigarette butt containers at places where trash is likely to accumulate, like common areas and along busy streets and empty such receptacles on a regular basis.
- Develop and conduct an Annual Litter March, or similar activity, where users, residents and/or employees clean up the community within their Public Complex. Target those areas where there is a lot of litter. These activities could be coordinated with other public education activities (e.g., storm drain inlet labeling).
- Retrofit existing storm drain inlets to meet the standard contained in Attachment C earlier than required by the permit (rather than waiting until repaving or other projects).

Improper Disposal of Waste

WHAT IS REQUIRED?

Minimum Standard

Public Complexes shall adopt and enforce an appropriate regulatory mechanism prohibiting the Public Complex users and the Public Complexes employees from the improper spilling, dumping, or disposal of materials other than stormwater into the Public Complex's small MS4 (excluding those authorized in Part I, Section A.2.d). If the Public Complex observes someone other than a Public Complex user or employee violating the regulatory mechanism, the Public Complex shall report the incident to the Department's Action Hotline (877-WARNDEP).

Measurable Goal

Public Complexes shall certify annually that they have met the Improper Waste Disposal Control minimum standard.

Implementation

Within 18 months from the effective date of permit authorization, Public Complexes shall have fully implemented the Improper Disposal of Waste Control minimum standard.

WHAT DOES THIS MEAN?

This BMP requires the Public Complex, through a regulatory mechanism, to prohibit the Public Complex users and employees, while on Public Complex property, from spilling, dumping, or disposal of materials other than stormwater into the municipal separate storm sewer system (MS4). This includes materials like automotive fluids, used motor oil, paints and solvents that can have a direct impact on receiving water bodies. The BMP also requires the Public Complex to actively enforce the regulatory mechanism, which includes taking appropriate action when someone is found violating the regulatory mechanism.

A single quart of motor oil can pollute 250,000 gallons of drinking water.

This permit does allow the following new and existing nonstormwater discharges from the MS4:

- water line flushing and discharges from potable water sources;
- uncontaminated ground water (e.g., infiltration, crawl spaces or basement sump pumps, foundation or footing drains, rising ground waters);
- air conditioning condensate (excluding contact and non-contact cooling water);
- irrigation water (including landscape and lawn watering runoff);
- flows from springs, riparian habitats and wetlands, water reservoir discharges and diverted stream flows;
- residential car washing water, and residential swimming pool discharges;
- sidewalk, driveway and street wash water;
- flows from fire fighting activities;
- Flows from rinsing of the following equipment with clean water:
  - Beach maintenance equipment immediately following their use for their intended purposes; and
  - Equipment used in the application of salt and de-icing materials immediately following salt and de-icing material applications. Prior to rinsing with clean water, all residual salt and de-icing materials must be removed from equipment and vehicles to the maximum extent practicable using dry cleaning methods (e.g., shoveling and sweeping). Recovered materials are to be returned to storage for reuse or properly discarded.

Rinsing of equipment in the above situations is limited to exterior, undercarriage, and exposed parts and does not apply to engines or other enclosed machinery.

WANT TO KNOW MORE?

The improper disposal of pollutants can have a negative effect on surface and ground water quality. Failure to properly dispose of materials like automotive fluids, motor oil, lawn and garden supplies, household cleaning supplies, paints and solvents, can have a direct impact on receiving waterbody quality. Each year nearly 180 million gallons of used oil is disposed of improperly. It is estimated that a single quart of motor oil can pollute 250,000 gallons of drinking water.

Uninformed users and employees may dump materials that are hazardous to human heath and/or the environment, such as cleaning supplies, lawn and garden care products, motor oil, paints, etc., onto streets, sidewalks, roadways, onto the ground, or down storm sewers, unintentionally causing the pollutants to enter surface and/or ground waters. Most illegal disposal occurs because people are unaware that it causes an environmental problem or that it is actually illegal. A smaller percentage of these occurrences are deliberate acts. The proper disposal of these wastes may be as simple as disposing of it with other trash. However, a better option may be to recycle or reuse these materials. Motor oil, oil filters, and automotive batteries are just a few examples of hazardous materials that can be recycled and reused. The threat they pose to the environment, as well as human health, can be greatly reduced when these materials are recycled and reused instead of being dumped down storm sewers or onto the ground.

For more information on the improper disposal of wastes please see the Local Public Education BMP, "Want to know more?" section in Chapter 5 of this guidance manual.

Recommendations

The following recommendations may be beneficial, but are not required by the permit.

- Establish a hotline for reporting the improper disposal of waste. A hotline or dedicated telephone number makes it easier to report illegal disposal
- Appropriate personnel (operators, police, fire, ER) should have emergency phone numbers such as the Municipal and/or County Office of Emergency Management and the NJDEP Action Hotline (1-877-WARN-DEP)

Wildlife Feeding

WHAT IS REQUIRED?

Minimum Standard

Public Complexes shall adopt and enforce an appropriate regulatory mechanism that prohibits the feeding at the Public Complex of any wildlife (excluding confined animals, for example wildlife confined in zoos, parks, or rehabilitation centers or as part of academic research or unconfined wildlife at environmental education centers).

Measurable Goal

Public Complexes shall certify annually that they have met the Wildlife Feeding Control minimum standard.

Implementation Schedule

Within 18 months from the effective date of permit authorization, Public Complexes shall have fully implemented the Wildlife Feeding Control minimum standard.

WHAT DOES THIS MEAN?

Public Complexes must adopt and enforce a wildlife feeding regulatory mechanism to prohibit the feeding of wildlife at the Public Complex. This prohibition helps prevent nutrients, organic pollutants, and pathogens associated with wildlife fecal matter from entering local water bodies, as well as preventing overgrazing, which can lead to erosion. The Public Complex may allow the feeding of any confined animal such as wildlife confined in zoos and petting zoos, parks, or rehabilitation centers. It is important to note that while most people understand "wildlife" to mean waterfowl, "wildlife" also includes other wild animals, like bears, deer and pigeons. The Public Complex may allow baiting of wildlife for the purposes of hunting and fishing if done in accordance with New Jersey Fish and Game regulations.

WANT TO KNOW MORE?

Many people enjoy feeding waterfowl and other wildlife. For them, it provides an escape from their everyday life and work, it gives them a sense of pleasure and fulfillment to help the animals, and it brings the wildlife closer so that their children can see them. What these people don't realize is that they are actually harming the very animals they are trying to help. Feeding wildlife can actually do more harm than good to both the animal and its habitat, and can also be harmful to people. Artificial feeding can for example result in poor nutrition, delayed migration, spread of disease, overcrowding, unnatural behavior, water pollution, and aggressive behavior.

Feeding attracts wildlife in unnatural numbers, beyond natural food and water supplies, and frequently in numbers beyond which people will tolerate. This overcrowding often results in over-grazing which can lead to erosion, which can result in excess amounts of sediment getting into our waters. These areas can quickly become unsanitary and unusable to people, and a breeding ground for wildlife disease. While these diseases are generally not transmissible in wild settings, they thrive in overcrowded and unsanitary conditions where the wildlife is eating in the same place where they defecate. Many beach closings have also been attributed to geese and other birds. When an excessive number of birds congregate near a beach or waterway, their fecal matter can sometimes overload the normal capacity of a beach to absorb natural wastes, thus degrading the water quality and requiring the area to be closed to the public. In addition to this, where birds congregate to feed, E-coli counts can swell to levels that make the water unsuitable for swimming.

Excess nutrients in ponds and other waterways caused by unnatural numbers of waterfowl and other wildlife droppings can result in water-quality problems such as summer algal blooms. These problems are directly related to a loss of habitat and wildlife, including fish kills, as well as odor nuisances, taste and odor in drinking water, and an interference with various forms of recreation (e.g., fishing, swimming, boating, etc.).

There are many other options and alternatives to feeding wildlife. If everyone stops feeding wildlife, the wildlife will not disappear. Families can still visit sites to enjoy viewing the animals. Children can still be encouraged to learn about wildlife and their natural habitats. Additionally, some zoos offer feeding of captive wildlife.

Vegetative Waste

WHAT IS REQUIRED?

Minimum Standard

Public Complexes must develop, when applicable, a vegetative waste collection and disposal program to ensure the proper pickup, handling, storage and disposal of vegetative wastes generated at the Public Complex. Vegetative waste shall be managed to minimize the impact of those activities on stormwater discharge quality.

Where residences are located within the Public Complex, yard waste pickups shall be performed monthly from October through December, once in the spring ("spring clean-up"), and on an "as needed" basis for the rest of the year. The frequency of the "as needed" pickups shall be determined at the discretion of the Public Complex. Any area, which the Public Complex determines to have no yard waste, will be exempt from the collections. All yard wastes may be placed at the curb no sooner than seven (7) days prior to the collection and can be placed no closer than 10 feet from any storm sewer inlet along the street, unless they are bagged or otherwise containerized.

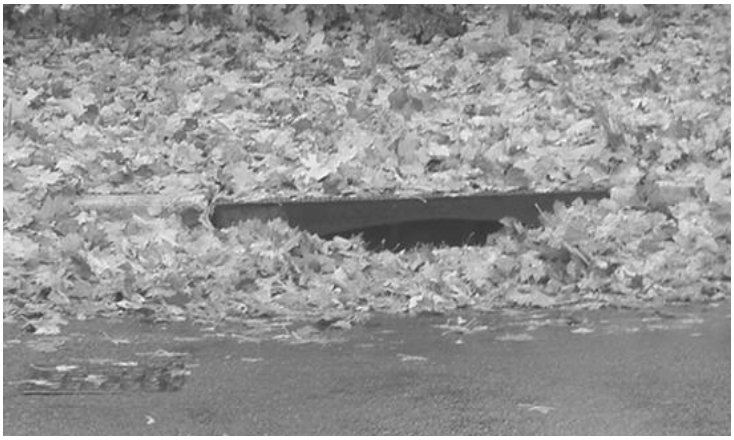

Leaves raked to the curb get washed into storm sewers and receiving streams, adding to maintenance costs and water pollution.

Measurable Goal

Public Complexes shall certify annually that they have met the Vegetative Waste minimum standard.

Implementation Schedule

Within 12 months of the effective date of permit authorization, Public Complexes shall have developed and begun implementing the Vegetative Waste minimum standard.

WHAT DOES THIS MEAN?

Defining "Vegetative Waste" and "Yard Waste"

For purposes of the Public Complex Permit, the Department considers "vegetative waste" and "yard waste" to mean "leaves and grass clippings." Public Complexes have the discretion as to whether they will also consider any kind of brush or other plant materials to be "vegetative waste" or "yard waste."

Vegetative Waste Collection and Disposal Program

The Public Complex must develop and implement a vegetative waste collection and disposal program for all areas within the Public Complex that have vegetative waste. This program must comply with any applicable requirements of the State Solid Waste Management Act, N.J.S.A. 13:1E-1 et seq., and the Department's implementing rules for that Act. Any questions about those requirements should be directed to the Department's Division of Solid and Hazardous Waste.

If the Public Complex contains homes where residents maintain yards, vegetative waste from those yards must be collected once a month from October through December, and once again in the spring. If the Public Complex determines that additional yard waste collections are necessary, they should be done on an "as needed" basis. Public Complexes are to prohibit all yard waste from being placed at the curb or along the street no sooner than seven (7) days prior to the scheduled collection

date and placed no closer than 10 feet from any storm sewer inlet. In order to comply with this prohibition, residents maintaining yards will need to be regularly notified of scheduled collections. If the Public Complex, as a result of an extenuating circumstance, does not perform the collection as scheduled resulting in yard waste being at the curb longer than seven (7) days, the residents would not be in violation of the prohibition. If there are any areas within your Public Complex that do not have yard wastes, they are exempted from these collections.

WANT TO KNOW MORE?

Regular vegetative waste collections help to ensure that the wastes do not end up in our storm sewers or water bodies. When leaves are placed at the curb and are carried away by stormwater, they can have several detrimental effects on the surrounding community and environment. Excess leaves and grass clippings can clog stormwater systems, causing flooding and requiring additional maintenance at the Public Complex's expense. If yard wastes enter local waterways, they remove oxygen from the water during the decomposition process and lead to increased nutrients, which cause excessive plant and algal growth.

However, yard wastes also don't belong in landfills. During the summer, grass clippings can make up to 50 percent of waste, and in the fall leaves can account for 60 percent to 80 percent of waste. To minimize the amount of yard waste in landfills, it is important that homeowners know proper alternatives to traditional disposal like mulching and composting.

Leaves and grass clippings are a valuable resource. Yard wastes can be recycled by both the Public Complex and by the individual homeowner. On-site composting, as well as "grasscycling," treats organic materials as a valuable resource, thus diverting them from disposal and reducing the environmental problems associated with landfills. On-site composting and grasscycling produces valuable soil amendments that can be used on site. It can also inoculate the soil with beneficial microbes that can extract nutrients from the soil and pass them on to the plants, therefore reducing the need for chemical fertilization. Grass clippings and leaves can be recycled directly on the lawn or by composting or mulching. When grass clippings are left on the lawn they can act as fertilizer by breaking down quickly and releasing nutrients into the soil. Leaves can have a similar effect on lawns, but will take a longer time to decompose unless they are shredded first. If the leaves are composted, they can have several other benefits to the soil, such as adding organic matter, which improves the way in which water interacts with the soil. For instance, if it is mixed with a sandy soil it will act as a sponge and retain the water, and if it is mixed with a clay soil it will add porosity and make the soil drain more quickly.

Recommendations

The following are recommendations that may be beneficial, but are not required by the permit.

- Provide for composting/mulching at recycling facilities designed and operated in compliance with Department rules for such facilities.
- Provide containers with lids to residents within the Public Complex labeled vegetative waste.

Illicit Connection Elimination and MS4 Outfall Pipe Mapping

WHAT IS REQUIRED?

Minimum Standards

i. Storm Sewer Outfall Pipe Mapping – Public Complexes must develop a map showing the location of the end of all MS4 outfall pipes that are operated by the Public Complex, and that discharge within the Public Complex's jurisdiction to a surface water body (e.g., a lake, ocean, or stream including an intermittent stream). This map shall also show the location (and name, where known to the Public Complex) of all surface water bodies receiving discharges from those outfall pipes. Each outfall pipe mapped shall be given an individual alphanumeric identifier, which shall be noted on the map. The outfall pipes shall be mapped on either a tax map prepared in accordance with Title 18, Chapter 23A of the New Jersey Administrative Code or on another map drawn to equal or larger (more detailed) scale. The Public Complex shall submit a copy of its outfall pipe map to the Department upon request.

Public Complexes must perform a visual inspection of each outfall pipe operated by the Public Complex. Dry weather flows must be investigated further.

Prohibiting Illicit Connections - Each Public Complex shall, to the extent allowable under law, effectively prohibit through an appropriate regulatory mechanism, illicit connections to the Public Complex's small MS4, and implement appropriate enforcement procedures and actions.

ii. Illicit Connection Elimination Program - Each Public Complex shall, to the extent allowable under law, develop and implement a program to detect and eliminate illicit connections into the Public Complex's small MS4. The program, at minimum, must include an initial physical inspection of all its outfall pipes. All outfall pipes that are found to have dry weather flow are to be further investigated.

The inspections of outfall pipes and investigations of dry weather flows are to be conducted in accordance with the procedures for detecting, investigating, and eliminating illicit connections contained in Attachment B of the permit. Results of the inspections of outfall pipes and dry weather flows are to be recorded on the Department's Illicit Connection Inspection Report form contained in the Department's "Public Complex General Permit Guidance Document". Inspection reports for dry weather flows discovered as a result of initial physical inspections or as part of the ongoing program must be submitted to the Department with the annual certification. If the dry weather flow is intermittent the Public Complex must perform, at minimum, three (3) additional investigations in an attempt to locate the illicit connection. If an

illicit connection cannot be located or is found to emanate from an entity other than the Public Complex then the Public Complex must submit to the Department a written explanation detailing the results of the investigation. If the illicit connection is found to be from another public entity, the Public Complex shall also notify that entity. All illicit connections found that result from the Public Complex's own illicit connections must be eliminated within six (6) months of the discovery.

After the completion of the initial physical inspection of all outfall pipes, Public Complexes must maintain an ongoing program to detect and eliminate illicit connections. The ongoing program will respond to complaints and reports of illicit connections, including those from operating entities of interconnected small MS4s, and continue to investigate dry weather flows discovered during routine inspections and maintenance of the small MS4.

Measurable Goal

i. Public Complexes shall certify annually that an outfall pipe map has been completed or is being prepared in accordance with permit conditions and shall report the number of outfall pipes mapped within the year being reported and the total number of outfall pipes mapped to date.
ii. Public Complexes shall submit an annual certification to the Department certifying that an appropriate regulatory mechanism is in place prohibiting illicit connections and is being actively enforced.
iii. Public Complexes shall certify annually that an illicit connection elimination program has been developed in accordance with permit conditions to detect and eliminate illicit connections into the Public Complexes' small MS4. Annual certifications shall also include the number of outfalls physically inspected, the number of outfalls found to have dry weather flow, the number of illicit connections found and the number of illicit connections eliminated. Copies of inspection reports shall be submitted with the annual certification for those outfalls found to have dry weather flow.

Implementation Schedule

i. Storm Sewer Outfall Pipe Mapping – Public Complexes shall divide the Public Complex into two (2) sectors for the purposes of outfall mapping. A diagram of the Public Complex showing the two (2) sectors shall be part of the Public Complex's SPPP. Public Complexes shall map the location of the end of small MS4 outfall pipes in one sector 36 months from the EDPA; and map the location of the end of all small MS4 outfall pipes on or before 60 months from the EDPA.
ii. Prohibiting Illicit Connections - Within 18 months from the effective date of permit authorization, Public Complexes shall effectively prohibit through an appropriate regulatory mechanism, illicit connections to the Public Complex's small MS4, and implement appropriate enforcement procedures and actions in accordance with the minimum standard.
iii. Illicit Connection Elimination Program - Within 18 months from the effective date of permit authorization, Public Complexes shall have developed and begun implementing a program to detect and eliminate illicit connections into the Public Complex's small MS4 in accordance with the minimum standard. Public Complexes shall perform an initial physical inspection of all outfall pipes using the Department's Illicit Connection Inspection Report form within 60 months from the EDPA.

WHAT DOES THIS MEAN?

Public Complexes are required to develop and maintain an ongoing program to detect and eliminate illicit connections. The first step in this program is to develop an outfall pipe map, showing the location of the end of all MS4 outfall pipes that are operated by the Public Complex and that discharge to surface water. If any outfalls are found to have a dry weather flow, they must be further investigated. If they are found to have an illicit connection, the illicit connection must be eliminated (or reported to the Department if the illicit connection is found to emanate from an entity other than the Public Complex). A regulatory mechanism prohibiting illicit connections shall be adopted and enforced. Finally, an annual report shall be submitted to the Department certifying that the map is being prepared, or has been completed according to the schedule set in the permit, that the illicit connection elimination program has been developed and is being implemented, and that the regulatory mechanism prohibiting illicit connections is in place and is being enforced. Additionally, the Public Complex is required to fill out an Illicit Connection Inspection Report Form for each outfall inspected. For outfalls that are found to have dry weather flows, these forms must be submitted to the Department with the annual report. A copy of this form can be found in Chapter 12 of this document.

(**Important Note:** The Public Complex is not required to map its entire municipal separate storm sewer system, just the ends of the outfall pipes. In addition, the Public Complex is not required to map outfall pipes that are operated by another entity (e.g., NJDOT or other State agency, municipality, county, another Public Complex, private entity, etc.).

WANT TO KNOW MORE?

An "illicit connection," as described in Attachment B in the permit, means any physical or non-physical connection that discharges the following to the Public Complex's small MS4, unless that discharge is authorized under a New Jersey Pollutant Discharge Elimination System (NJPDES) permit other than the Public Complex Permit (non-physical connections may include, but are not limited to, leaks, flows, or overflows into the municipal separate storm sewer system):

- Domestic sewage
- Non-contact cooling water, process wastewater, or other industrial waste (other than stormwater); or
- Any category of non-stormwater discharges that the Public Complex identifies as a source or significant contributor of pollutants pursuant to 40 C.F.R. 122.34(b)(3)(iii).

Illicit connections of non-stormwater discharges have been shown to contribute substantial levels of contaminants to surface water bodies. These illicit connections may originate from sources such as improperly connected sanitary sewage lines, industrial flows and from leaking or overflowing sanitary sewer lines and pumping stations. The first step in implementing an illicit connection elimination program is to identify and map stormwater outfall pipes.

It is widely felt that any in-roads made in eliminating the large number of inappropriate entries into storm sewer systems will further enhance conventional pollution control programs. Secondary treatment of sanitary sewage is standard throughout the country, yet these efforts in upgrading treatment are undercut by untreated sanitary wastes being discharged via illicit connections from our MS4 systems.

Types of pollutants discharged via illicit connections vary widely and can originate from a myriad of sources. Illicit discharges may include; sanitary sewage, cooling water, industrial flows, and wash water and can contribute pollutants such as pathogens, nutrients, metals, petroleum hydrocarbons,

detergents, chlorine, organics and heat. All of these pollutants can cause an adverse effect on receiving waters and contribute substantial levels of contaminants.

Procedures for Detecting, Investigating, and Eliminating Illicit Connections

Requirements for these procedures can be found in Attachment B of the permit. This section may include some of these requirements, but also includes recommendations provided by the Department that are not required by the permit.

Detection

MS4 outfall pipes, for the most part, should not be discharging during substantial dry periods (72 hours after a rain event). Such flow is frequently referred to as "dry weather flow," which may be the result of an illicit connection. All dry weather flows are generally non-stormwater discharges, however not all dry weather flows are illicit connections. Some non-stormwater flows result from the improper disposal of waste (e.g., radiator flushing, engine degreasing, improper disposal of oil) and some may be the result of allowable discharges such as residential car washing, irrigation runoff, permitted (NJPDES) discharges and natural waters (spring water and groundwater infiltration). By using the Department's Illicit Connection Inspection Report form[1] and making physical observations, a Public Complex will compile information that will help determine if the dry weather flow is an illicit connection and the most likely source of the illicit connection. After making these physical observations, additional chemical field-testing will enable a Public Complex to further narrow the potential source(s) of the illicit connection.

Physical observations of the discharge for turbidity, staining, odor, and color can help determine the source of the illicit connection.

The first physical observation is to observe if there is a dry weather flow. Some dry weather discharges are continuously flowing and some are intermittent. Observations will allow the Public Complex to establish with reasonable certainty if there is an intermittent flow. If there are indications of intermittent flows (staining, odors and deterioration of outfall structure) follow-up investigations are required (see Investigation section). An estimate of the flow rate of the discharge should also be noted (e.g., flow rate can sometimes be estimated by various methods, including timing how long it takes to fill a container of a known size). Additional physical observations and measurements should be made for odor, color, turbidity, floatable matter, temperature, deposits and stains, vegetation and algal growth and condition of outfall structure (see Illicit Connection Inspection Report form). Information compiled from physical observations and field monitoring should be used to help identify potential sources. These observations are very important since they are the simplest method of identifying grossly contaminated dry weather flows. If physical observations alone are sufficient to warrant further investigation, then field testing is not required.

[1] A copy of this form can be found in Chapter 12 of this document

If a dry weather flow exists, and after making all physical observations (unless physical observations are enough to warrant further investigation), the flow should be tested for detergents (surfactants as methylene blue active substances (MBAS). Results of monitoring for detergents, using a testing procedure with a detection limit of 0.06 mg/L, can accurately distinguish between discharges that are contaminated by sanitary wastewater and those that are not. Dry weather flows that contain detergents in excess of the detection limit require further investigation and should be given the highest priority. Dry weather flows that do not test positive for detergents and do not show physical characteristics of sanitary wastewater (odor, floatables, and/or color) are unlikely to be from sanitary wastewater sources, yet they may still be illicit connections of industrial wastewater, rinse water, backwash, or cooling water.

Non-stormwater discharges that are detergent-free, and therefore not sanitary, should be tested for fluoride. Fluoride concentration is a reliable indicator of whether the non-stormwater flow is from a potable or non-potable water source. Fluoride treated potable waters usually have concentrations of total fluoride in the range of 1.0 to 2.5 mg/L. Non-stormwater discharges that test below the detection limit for fluoride (0.13 mg/L using a Hach Colorimeter DR/850) are likely to be groundwater infiltration, springs or streams. In some instances a Public Complex may find a non-stormwater discharge that originates from an on-site well used for industrial cooling water which will test non-detect for both detergents and fluoride. Public Complexes will have to rely on temperature to differentiate between these cooling water discharges and ground water infiltration and other natural flows. Fluoride testing won't be able to pinpoint the source of the illicit connection, but is a helpful tool in further narrowing the search.

The ratio of ammonia (as N) to potassium can be used to help distinguish a sanitary wastewater source from a washwater source. Detergents will be present in both sanitary sewage and washwater. Generally the ammonia/potassium ratio of sanitary sewage will be greater than 0.60. Non-stormwater flows with an ammonia/potassium ratio less than 0.60 are likely to be a washwater source.

All of the tests recommended for the tracing of illicit connections may be performed in the field by employees of the Public Complex or may be contracted out. Lab certification for those parameters is **not** required. It is advised that the person taking the field sample be familiar and trained in appropriate field testing protocol and be familiar with the equipment to be used. Analysis for detergents (MBAS), fluoride, ammonia, and potassium may be conducted by using a field spectrophotometer produced by various lab instrument manufacturers. The spectrophotometers are accurate, easy to use with limited training and are designed to be used in the field. The flow chart on the following page (Figure 2) illustrates the recommended steps to use when identifying an illicit connection.

Investigation

Any storm sewer outfall pipe found during the initial inspection, or on any subsequent inspection to have a non-stormwater discharge, or indications of an intermittent non-stormwater discharge, requires further investigation by the Public Complex to identify and locate the specific source. Non-stormwater discharges suspected of being sanitary sewage and/or significantly contaminated should prioritize and investigated first. Dry weather flows believed to be an immediate threat to human health or the environment shall be reported immediately to the NJDEP Action Hotline at 1-877-WARNDEP (1-877-927-6337). Investigations of non-stormwater discharges suspected of being cooling water, washwater, or natural flows may be delayed until after all suspected sanitary sewage and/or significantly contaminated discharges have been investigated, eliminated and/or resolved.

Information compiled from physical observations and field monitoring should be used to help identify potential sources. These observations are very important since they are the simplest method of identifying grossly contaminated dry weather flows (see Figure 3).

The use of field testing further narrows the potential sources of the non-stormwater discharge. However, it is unlikely that either the physical observations or the field testing alone will pinpoint the exact source of the dry weather discharge. As a result, Public Complexes will need to perform investigations "upstream" (but not outside Public Complex property) to identify potential illicit connections to systems with identified problem outfalls.

Common approaches to identifying potential sources of illicit connections include drainage system surveys (field testing at upstream manholes, visual inspections, video/televised, smoke and dye testing), and industrial and commercial site assessments.

A drainage system survey may require that a Public Complex similarly inspect each stormsewer line that connects into the main storm drain trunk line much like the initial inspections performed on each outfall pipe. Physical observations and additional field testing will help locate the dry weather flow as you trace the source moving further and further up the storm sewer pipe. Depending on the size and complexity of the storm drain system, it may be possible to isolate smaller portions of the system for more intensive investigations including smoke tests, dye testing and televised inspections.

Information may be compiled from industrial and commercial facilities within the Public Complex by distributing or performing industrial inventories. Through inspections or facility self-inspections it may be possible to locate illicit connections at likely sources such as floor drains, wash bays, and cooling water systems.

Facilities may not be aware that these connections are illicit and may find these connections while completing the questionnaire and correct them on their own. Information from these surveys may also allow Public Complexes to eliminate certain industries as potential sources during an investigation.

All non-stormwater discharges, whether continuous or intermittent, must be investigated by the Public Complex. All investigations must be resolved. If the source is found to be a non-stormwater discharge authorized under Part I, Section A.2.d of the permit, then no further action is required. If a non-stormwater discharge is found but no source is located within six (6) months of beginning the investigation, then the Public Complex shall submit an Closeout Investigation Form to the address(es) listed on the form. The Public Complex must document that a good faith effort was made to find the source of the dry weather discharge and document each phase of the investigation. If the observed discharge is intermittent, the Public Complex must make and document a minimum of three (3) separate attempts to investigate the discharge when it is flowing. If these attempts are unsuccessful, the Public Complex shall submit the Closeout Investigation Form with the Annual Report and Certification (see Chapter 12). However, since this is an ongoing program, Public Complexes should periodically recheck these suspected intermittent discharges.

Elimination

Non-stormwater discharges traced to their source and found to be the Public Complex's own illicit connections shall be eliminated within six (6) months of the discovery. The Public Complex may apply for a NJPDES permit for the discharge, but the discharge shall be ceased until a valid NJPDES permit has been issued by the Department. Public Complexes are required to verify that the illicit discharge was eliminated within the specified timeframe and ensure that measures taken to

cease the discharge are permanent and are not done in such a manner that would allow easy reconnection to the MS4.

If an illicit connection cannot be located or is found to emanate from an entity other than the Public Complex, then the Public Complex must submit to the Department a written explanation detailing the results of the investigation. If the illicit connection is found to be from another public entity, the Public Complex shall also notify that entity.

Mapping and Illicit Connection Program Recommendations

The following recommendations may be beneficial, but are not required by the permit.

- To help reduce costs, when mapping your outfall pipes, look for signs of outfall pipe stream scouring (see Outfall Pipe Stream Scouring Remediation BMP in Chapter 7 of this guidance document), and complete your Illicit Connection Report form. This will ensure that you do not have to make multiple visits to the same outfall pipes.
- Map your entire MS4 system in addition to the required maps. An accurate map of the entire storm sewer system will aid in the investigation and elimination of illicit connections and allow for better stormwater facilities management and better planning of new development.
- If the entire storm sewer system is mapped, indicate on the map primary uses and development in areas within the system (e.g., residential, industrial, commercial, farm/agriculture).
- Use the most accurate methods feasible for locating the end of the outfall pipe, including Global Positioning System technology.
- In tidal areas, mapping field work should coincide with low tide to help ensure that outfall pipes are visible.
- Aerial, infrared and thermal photography may be helpful in identifying suspect discharges.
- Support and sponsor stream or shoreline walks by environmental groups, watershed associations and civic groups to assist in identifying suspect discharges.
- Conduct routine dye testing of industries and commercial establishments that have a greater probability of illicit connections (automobile-related businesses, restaurants).

References:

USEPA, Investigation of Inappropriate Pollutant Entries into Storm Drainage Systems, January 1993.

USEPA, National Menu of Best Management Practices for Storm Water Phase II, last modified May 31, 2001.

Pitt, Robert, Illicit Discharge and Elimination, Presentation at the USEPA *National Storm Water Coordinator's Meeting*, Orlando, 2001.

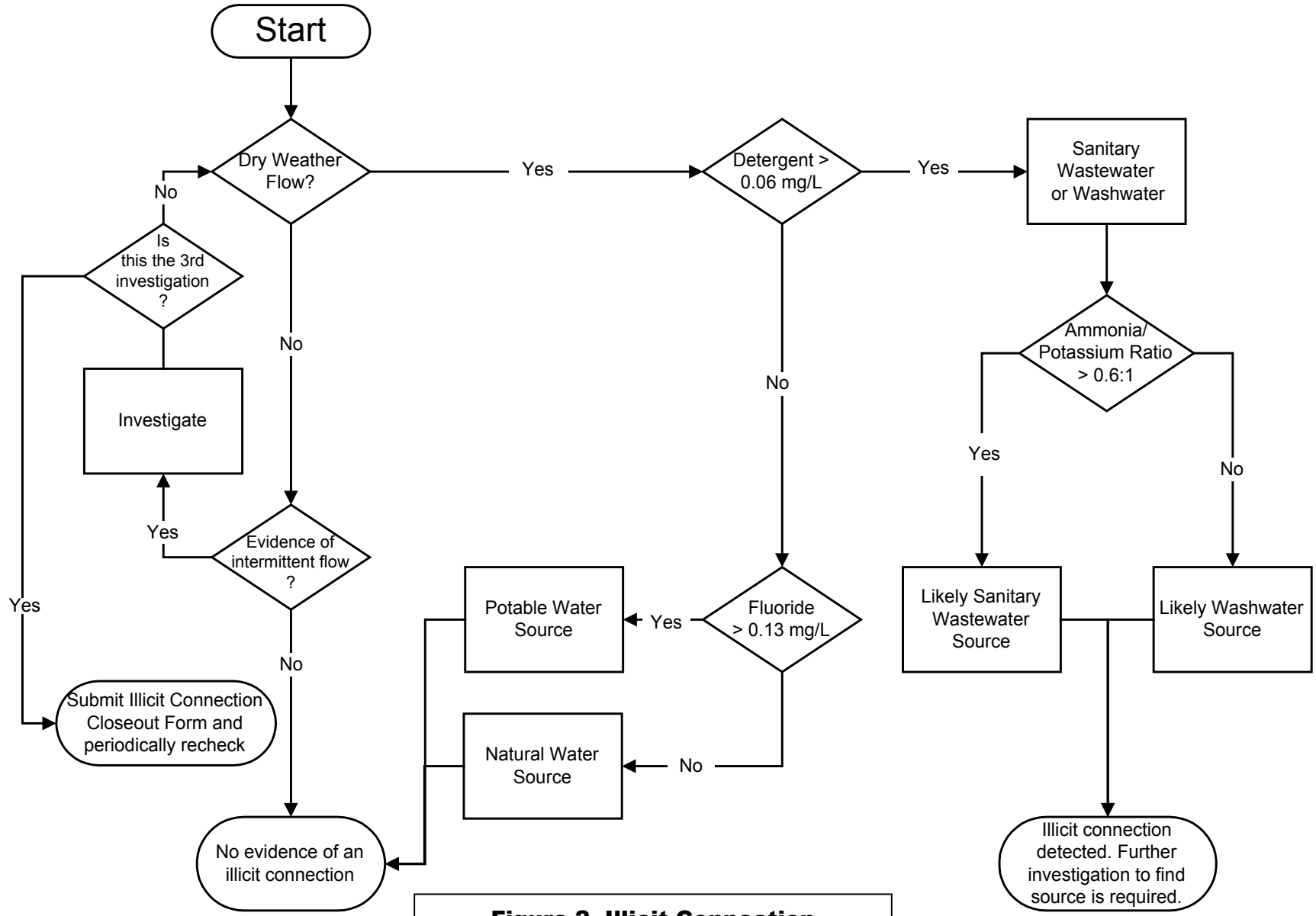

Figure 2. Illicit Connection Investigation Flow Chart

Interpretations of Physical Observations and Likely Associated Sources

Odor	*Sewage:* smell associated with stale/septic sanitary wastewater. *Sulfur ("rotten eggs"):* industries that discharge sulfide compounds or organics (meat packers, canneries, dairies, etc.). *Oil and gas:* petroleum refineries or many facilities associated with vehicle maintenance or petroleum product storage. *Rancid-sour:* food preparation facilities (restaurants, hotels, etc.).
Color	Important indicator of inappropriate industrial sources. Industrial dry weather discharges may be of any color, but dark colors, such as brown, gray, or black, are most common. *Yellow:* chemical plants, textile and tanning plants. *Brown:* meat packers, printing plants, metal works, stone and concrete, fertilizers, and petroleum refining facilities. *Red:* meat packers. *Gray:* dairies, sewage.
Turbidity	Often affected by the degree of gross contamination. Dry weather industrial flows with moderate turbidity can be cloudy, while highly turbid flows can be opaque. High turbidity is often a characteristic of undiluted dry weather industrial discharges. *Cloudy:* sanitary wastewater, concrete or stone operations, fertilizer facilities, and automotive dealers. *Opaque:* food processors, lumber mills, metal operations, pigment plants.
Floatable Matter	A contaminated flow may contain floating solids or liquids directly related to industrial or sanitary wastewater pollution. Floatables of industrial origin may include animal fats, spoiled foods, solvents, sawdust, foams, packing materials, or fuel. Floatables in sanitary wastewater include fecal matter, toilet paper, sanitary napkins and condoms.
Deposits and Stains	Deposits and stains on outfall structures may be evidence of intermittent non-stormwater discharges. Deposits and stains include coatings, residues or fragments of materials. Grayish- black deposits that contain animal flesh or hair may be from leather tanneries. White crystalline powder is usually due to nitrogenous fertilizer wastes. Excessive sediment deposits may be attributed to construction site erosion. Sources of oily residues may include petroleum refineries, storage facilities, and/or vehicle service facilities.
Vegetation	Vegetation surrounding an outfall may show the effects of industrial pollutants. Decaying organic materials coming from food processors may cause increased vegetation growth. Other toxic materials from industrial discharges may decrease or kill vegetation. Non-stormwater discharges that contain excessive nutrients from concentrated animal feeding activities may also kill vegetation.
Damage to Outfall Structures	Cracking, deterioration, and scouring of concrete or peeling of paint at an outfall pipe may be caused by severely contaminated industrial discharges that are extremely acid or basic. Primary metal industries may discharge highly acidic batch dumps. Food processors with discharges that become "septic" produce hydrogen sulfide gas, which quickly deteriorates metal surfaces.
Temperature	Both sanitary wastewater and cooling water may substantially increase the outfall discharge temperature. Elevated temperature measurements in discharges that test negative for detergents are likely to be cooling water discharges. Sources of cooling water discharges would be industrial facilities in the drainage area.

Figure 3

Chapter 7 - Solids and Floatable Control

Solids and floatable control focuses on using preventative measures to help reduce the amounts of solids and floatable materials which may enter or result from the MS4s. "Solid and floatable materials" means sediment, debris, trash, and other floating, suspended, or settleable solids. The permit targets the reduction of solids and floatables since they are one of the most visible pollutants that impact our receiving waters. Many solids on streets come from pavement, tire and vehicle equipment wear, and often contain heavy metals and petroleum hydrocarbons. Solids are also produced by erosion along roads and in the vicinity of stormwater outfall pipes. These solids contribute to siltation of waterways and make streambeds unsuitable for many species reproduction. Solids and floatables also create nuisances such as odors and toxic/corrosive gases. Solids and floatables are also aesthetically unappealing, making water look dirty, turbid and cloudy.

Street Sweeping

WHAT IS REQUIRED?

Minimum Standard

Public Complexes shall sweep all parking lots and curbed streets (including roads or highways) owned or operated by the Public Complex with storm drains that have a posted speed limit of 35 mph or less (excluding all entrance and exit ramps) at a minimum of once per month, weather and street surface conditions permitting.

Measurable Goal

Public Complexes shall certify annually that they have met the Street Sweeping minimum standard. Public Complexes must maintain records including the date and areas swept, number of miles of streets and parking lots swept and the total amount of materials collected. Information shall be reported to the Department in the annual report and certification.

Implementation Schedule

Within 12 months of effective date of permit authorization Public Complexes shall have developed and begun implementing a street sweeping program that meets the minimum standard above.

WHAT DOES THIS MEAN?

What streets need to be swept?

The only streets (including roads and highways) that need to be swept are streets that meet **all** of the following criteria:

- the parking lot or street is owned or operated by the Public Complex;
- the street is curbed and has storm drains;
- the street has a posted speed limit of 35 mph or less; and
- the street is not an entrance or exit ramp.

Public Complexes are required to sweep these streets and parking lots monthly (weather and street surface conditions permitting) and maintain appropriate record keeping, which will allow the completion of the Annual Report and Certification. The Department defined which streets need to be swept in an attempt to target those streets where sweeping may be most feasible or effective. The Department encourages all Public Complexes to maintain existing street sweeping and try to sweep all streets within the Public Complex once per year.

WANT TO KNOW MORE?

Street sweeping removes silt, trash, total suspended solids (TSS), hydrocarbons, excessive nutrients such as phosphorous and nitrogen, and other chemicals from the roadside before they are discharged from the storm drain system. Studies have revealed that the vast majority of toxic and conventional pollutants found in stormwater are associated with automobile maintenance and use. Studies have identified gasoline combustion, brake fluid, transmission oil, antifreeze, grease, undercoating and tire and brake lining wear as the chief contributors. Since little can be done to prevent the pollutants from depositing on street surfaces, attention must be focused on removing the accumulated materials. A regular street-sweeping program will help to clean and maintain the attractiveness of communities and enhance business viability and residential values.

It is also important to note there is a relationship between regular sweeping and maintenance of catch basins and other stormwater facilities. A regular sweeping program will reduce the amount of material accumulating in such facilities, reducing the need for frequent cleaning. More information on catch basin and stormwater facility maintenance can be found in this Chapter of the guidance document

For information on how to properly dispose of materials collected during street sweeping and catch basin cleaning see http://www.state.nj.us/dep/dshw/rrtp/sweeping.htm.

For information on the beneficial use program see http://www.state.nj.us/dep/dshw/rrtp/bud.htm.

Recommendations

The following are recommendations that may be beneficial, but are not required by the permit.

- Higher efficiency street sweepers should be considered when purchasing new equipment (e.g., regenerative air and vacuum filter street sweepers).
- By sharing staff and equipment, Public Complexes may benefit by saving money and resources.

Storm Drain Inlets (Retrofitting)

WHAT IS REQUIRED?

Minimum Standard

Retrofitting of existing storm drain inlets to meet the standard contained in Attachment C of the permit is required where such inlets are in direct contact with repaving, repairing (excluding repair of individual potholes), reconstruction or alterations of facilities operated by the Public Complex. For exemptions to this standard, refer to "Exemptions" in Attachment C.

Measurable Goal

Public Complexes shall certify annually that such storm drain inlets have been retrofitted to meet the minimum standard contained in Attachment C, unless otherwise exempted.

Implementation Schedule

Within 12 months of the effective date of permit authorization and thereafter, Public Complexes shall retrofit all such storm drain inlets in accordance with the Storm Drain Inlets minimum standard.

WHAT DOES THIS MEAN?

Any time your Public Complex does any repaving, repairing, reconstruction or alterations of facilities operated by the Public Complex, storm drain inlets in direct contact with the repaving, repairing, reconstruction or alterations must be retrofitted or replaced to meet the standard contained in Attachment C of the permit. Facilities include all roads, all parking lots, and any other area that the Public Complex owns or operates that have storm drain inlets. Repairing does not include the filling of individual potholes.

There are separate design standards for grates in pavement or other ground surfaces, and for curb-opening inlets. Each standard is described below. These standards help prevent certain solids and floatables (e.g., cans, plastic bottles, wrappers, and other litter) from reaching the surface waters of the State.

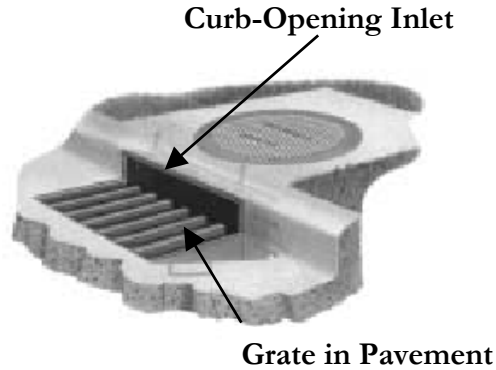

It is important to note that Attachment C of the permit also contains a number of exemptions to the storm drain inlet retrofitting requirement. The exemptions include:

- grandfathering of projects that began construction or were awarded bid prior to March 3, 2004;
- hydraulic performance exemption when the Public Complex determines that the standard would cause inadequate hydraulic performance (flooding);
- historic places exemption for situations where action to meet this standard constitutes an encroachment or will damage or destroy a New Jersey Register listed historic property;
- alternative device exemption where flows are already conveyed through a device that meets certain standards to prevent the delivery of solids and floatable materials;
- an exemption for **existing** curb-opening inlets if each individual clear space in the curb opening is no larger than 9 square inches.

Attachment C of the permit and guidance provided below should be consulted for the actual standard for grates and curb-opening inlets and specific exemption language.

Grates In Pavement or Other Ground Surfaces

This standard applies to grates that are used in pavement or another ground surface to collect stormwater into a storm drain or surface water body under the grate.

Examples of storm drain inlet grates subject to this standard include grates in grate inlets, the grate portion (non-curb-opening portion) of combination inlets, grates on storm sewer manholes, ditch grates, trench grates, and grates of spacer bars in slotted drains. Examples of ground surfaces include surfaces of roads (including bridges), driveways, parking areas, bikeways, plazas, sidewalks, lawns, fields, open channels, and stormwater basin floors.

Many grate designs meet the standard. The first option (especially for storm drain inlets along roads) is to use the New Jersey Department of Transportation (NJDOT) bicycle safe grate. This grate is described in Chapter 2.4 of the NJDOT Bicycle Compatible Roadways and Bikeways Planning and Design Guidelines, which is available at: http://www.state.nj.us/transportation/publicat/bike_guidelines.htm.

NJDOT "Bicycle Safe" Grate

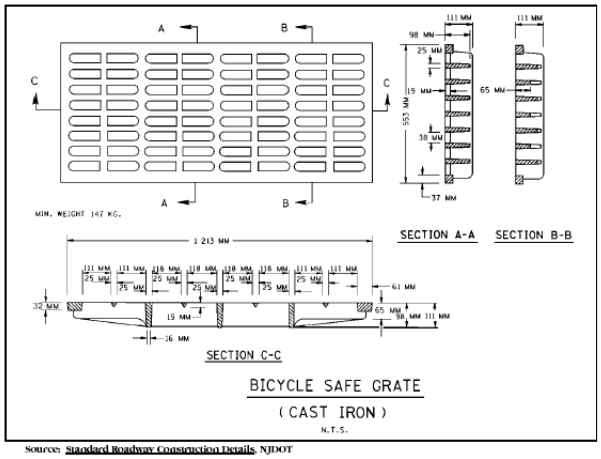

Source: Standard Roadway Construction Details, NJDOT

The other option is to use a different grate, as long as each "clear space" in the grate (each individual opening) is:

- No bigger than seven (7.0) square inches

OR

- No bigger than 0.5 inches (½ inch) across the smallest dimension (length or width).

Curb-Opening Inlets (including Curb-Opening Inlets in Combination Inlets)

If the storm drain inlet has a curb opening, the clear space in that curb opening (or each individual clear space, if the curb opening has two or more clear spaces) must be:

- No bigger than two (2.0) inches across the smallest dimension (length or width) - many curb-opening inlets installed in recent years meet this criterion

OR

- No bigger than seven (7.0) square inches

Option 1 (Example)

A curb-opening with a "clear space" no bigger than 2" across the smallest dimension

Option 2 (Example)

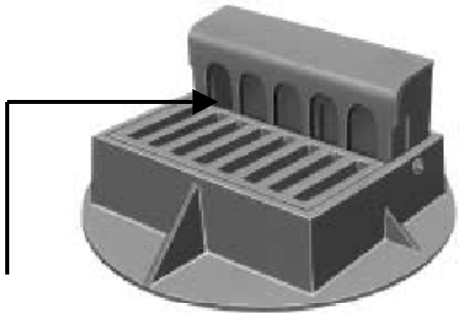

Each individual hole ("clear space") in the curb-opening is no bigger than 7 square inches

Retrofitting Discussion

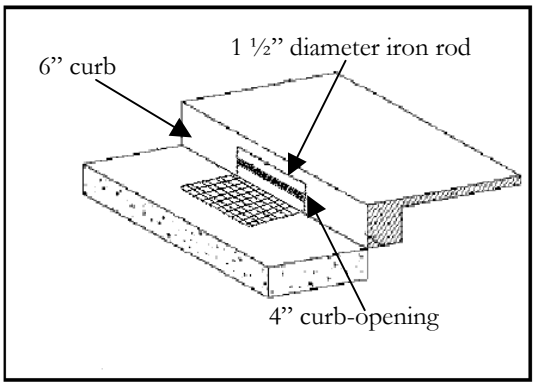

After retrofit w/1 ½" diameter rod, each clear space of the curb-opening is 1 ¼" across the smallest dimension.

Public Complexes which are undertaking a repaving, repairing, reconstruction or alteration project that will require the retrofitting of storm drain inlets pursuant to this section of the permit, have 2 choices: a) replace the hood piece, or b) retrofit the curb-opening inlet to meet the new design standard. (In most situations the grate will need to be replaced since there is no practical way to retrofit a grate to meet the standard.) Replacing the gutter inlet or hood piece may be the easiest solution. The Department has worked with a number of foundries to ensure a style is manufactured that meets the new design standard. A lower cost option would be to retrofit the curb-opening inlet by dividing the existing opening into 2 or more smaller openings (each no bigger than two (2.0) inches across the smallest dimension) with a bar, rod, or flat iron. This bar or flat iron needs to be permanently affixed to the casting by attaching to the existing bolt pattern on the hood piece or by some other method. This retrofitting technique has successfully been done, and can be seen in many NJ locations. Replacing the grate with a grate that extends to the back of the curb opening is another option.

Exemptions

For purposes of this SBR, the requirements of this standard do not apply whenever any of the following exemptions listed in Attachment C are applicable:

- A **"Hydraulic Performance Exemption"** where the Public Complex or other review agency determines that this standard would cause inadequate hydraulic performance.
- Either of two **"Alternative Device Exemptions"**:
  - The first of these exemptions is where flows from the "water quality design storm" as specified in N.J.A.C. 7:8 are conveyed through any device or combination of devices (e.g., end of pipe netting facility, manufactured treatment device, or a catch basin hood) that is designed, at a minimum, to prevent the passage of all solid and floatable materials that could not fit through one of the following:
    1. A rectangular space that is four and five-eighths ($4^5/_8$) inches long and one and one-half (1½) inches wide (this option does not apply for outfall netting facilities); or
    2. A bar screen that has a ½ inch (0.5 inches) opening between each bar.
  - The second of these exemptions is where flows are conveyed through a trash rack that has parallel bars with one-inch (1.0 inch) spacing between the bars, to the elevation of the "water quality design storm" as specified in N.J.A.C. 7:8.

    One of the requirements in the new Stormwater Management Rules at N.J.A.C. 7:8-5.7(a)2 is that "trash racks shall be installed at the intake to the outlet structure as appropriate, and shall have parallel bars with one-inch spacing between the bars to the elevation of the water quality design storm" [emphasis added].

In the new Stormwater Management Rules, the "water quality design storm" is specified at N.J.A.C. 7:8-5.5(a).

- A **"Historic Places Exemption"** where the Department determines, pursuant to the New Jersey Register of Historic Places Rules at N.J.A.C. 7:4-7.2(c), that action to meet this standard is an undertaking that constitutes an encroachment or will damage or destroy the New Jersey Register listed historic property.

WANT TO KNOW MORE?

Several studies have been conducted to determine what materials are most often discharged to storm sewers. Some of the most commonly found materials were polystyrene pieces, pieces of paper, candy and food wrappers, plastic bag fragments, and metal foil, with the biggest offender being plastic products. The useful qualities of plastic (it is cheap and plentiful) make it a tremendous pollution problem. Plastic needs ultraviolet light to decompose, taking hundreds of years to decay. In the meantime plastic continues to accumulate in our waterways, causing the deaths of many mammals, fish, birds and reptiles each year.

Every piece of solid or floatable material that is caught before it enters or leaves a storm drainage system will benefit the environment. Minimizing the size of spaces in storm drain inlet grates and curb openings will trap certain solid and floatable materials before they reach our waterways. However, these spaces must also be large enough to provide adequate hydraulic performance.

Recommendations

The following recommendations may be beneficial but are not required by the permit.

- Retrofit existing storm drain inlets to meet the standard contained in Attachment C earlier than required by the permit (rather than waiting until repaving or other projects).
- Increase street sweeping (above the minimum standard) to reduce clogging of storm drain inlets.
- Use additional devices to remove solid and floatable materials including trash racks, mesh nets, bar screens and trash booms.

Stormwater Facility Maintenance

WHAT IS REQUIRED?

Minimum Standard

Public Complexes shall develop and implement a stormwater facility maintenance program for cleaning and maintenance of all stormwater facilities operated by the Public Complex. Stormwater facilities include, but are not limited to: catch basins, detention basins, filter strips, riparian buffers, infiltration trenches, sand filters, constructed wetlands, wet ponds, bioretention systems, low flow bypasses, and stormwater conveyances. The stormwater facility maintenance must be performed as required to ensure the proper function and operation of the stormwater facility.

As sweeping increases and storm drain inlets are retrofitted, amounts of material removed during catch basin cleaning should decrease.

Public Complexes shall also clean all catch basins operated by the Public Complex annually to remove accumulated sediment, trash and debris.

Measurable Goal

Public Complexes shall certify annually that all stormwater facilities are properly functioning and that all catch basins have been cleaned in accordance with the minimum standard. If stormwater facilities were found not to be functioning properly and repairs were not made, a schedule for such repairs shall be included in the annual report and certification. Public Complexes shall also maintain records of inspections, maintenance and repairs that were performed which shall be reported in the annual report and certification.

Implementation Schedule

Within 12 months from the effective date of permit authorization, Public Complexes shall have developed and begun implementing a stormwater facility maintenance program in accordance with the minimum standard.

WHAT DOES THIS MEAN?

This BMP requires that the Public Complex maintain all of its stormwater facilities to ensure that they are properly functioning. The BMP also requires the annual inspection and cleaning of all catch basins owned or operated by the Public Complex. If, during the inspection of the catch basin, no sediment, trash or debris is observed, then the catch basin does not have to be cleaned that year. A catch basin is a cistern, vault, chamber or well that is usually associated with a storm drain inlet along a street, with the capability to trap debris and some sediments before they travel further into the MS4. Typically, a catch basin has a sump at its base.

This stormwater facility maintenance BMP does not include **private or public stormwater facilities** that discharge into the Public Complex's MS4 but are not operated by the Public Complex. Proper maintenance, including preventative maintenance, of stormwater facilities ensures they operate as designed. Stormwater facilities vary due to the environmental effect desired, from simple conveyance to designed wetland ecosystems that mimic nature. Many stormwater facilities like wet ponds, filter strips, and manmade wetlands provide pollutant removal. Additional stormwater facilities like infiltration basins, infiltration trenches and porous paving are designed to recharge groundwater. All must be maintained to operate at the designed efficiency.

Information on proper maintenance of many stormwater facilities is found in the New Jersey Stormwater Best Management Practices Manual as amended.

- For information on the proper handling and disposal of the debris collected during catch basin cleaning, see http://www.state.nj.us/dep/dshw/rrtp/sweeping.htm.

  (**Note**: In accordance with this guidance, at a minimum, all potentially contaminated road cleanup material must be staged on an impervious surface and covered with a waterproof material (i.e., tarpaulin or 10-mil plastic sheeting). The containment must be maintained for the duration of the staging period to prevent contaminant volatilization, runoff, leaching, or fugitive dust emissions. See above guidance for specifics.)

- For information on the beneficial reuse program see: http://www.state.nj.us/dep/dshw/rrtp/bud.htm.

WANT TO KNOW MORE?

Recommendations

Listed below are recommendations, not required by the permit, to help maintain stormwater facilities.

- Increase catch basin inspection and cleaning in problem areas (e.g., prone to flooding).
- Perform maintenance inspections after major storm events.
- Increase street sweeping (above the minimum standard) to decrease the amount of materials entering the catch basins and other stormwater facilities.
- Coordinate the timing of catch basin cleaning with the local mosquito control agency where possible.

Road Erosion Control Maintenance

WHAT IS REQUIRED?

Minimum Standard

Public Complexes shall develop a roadside erosion control maintenance program to identify and repair erosion along streets (including roads or highways) operated by the Public Complex. Public Complexes are also required to regularly inspect and maintain the stability of shoulders, embankments, ditches and soils along these streets to ensure that they are not eroding and contributing to sedimentation of receiving waters. Repairs shall be made in accordance with the Standards for Soil Erosion and Sediment Control in New Jersey, N.J.A.C. 2:90-1 (or N.J.A.C. 16:25A where NJDOT operates the Public Complex).

Measurable Goal

Public Complexes shall certify annually that they have developed and are implementing a roadside erosion control maintenance program. The certification shall also indicate the locations of all problem areas corrected and any maintenance done during that year. The dates of all inspections and employee training sessions shall also be reported in the annual report and certification.

Implementation Schedule

Within 18 months from the effective date of permit authorization, Public Complexes shall have developed and begun implementing a roadside erosion control maintenance program in accordance with the minimum standard.

WHAT DOES THIS MEAN?

Public Complexes must develop a program to detect and repair erosion along the streets (including roads and highways) operated by the Public Complex, and to regularly inspect and maintain the stability of shoulders, embankments, ditches and soils along these streets to ensure that they are not eroding and contributing to sedimentation of receiving waters. This requirement for road erosion control is limited to streets, shoulders, embankments, ditches and soils for which the Public Complex has, alone or along with other persons, primary management and operational decision-making authority. In some instances, these areas may not include the entire right-of-way owned by the Public Complex. Any repairs are to be made in accordance with the Standards for Soil Erosion and Sediment Control in New Jersey (N.J.A.C. 2:90-1), or with the NJDOT Soil Erosion and Sediment Control Standards at N.J.A.C. 16:25A where NJDOT operates the Public Complex.

It is important to note that this is an ongoing program and that all erosion along these streets operated by the Public Complex does not need to be repaired in any specific timeframe. Public Complexes however, must be able to show that there is an effective program in place and that repairs are being made. The Department does not expect that where existing erosion is widespread, all repairs will be completed during the initial five-year term of the permit. Rather the Department expects the Public Complex to show an ongoing, good faith effort to accomplish such repairs (including a prioritized schedule of the repairs).

WANT TO KNOW MORE?

New Jersey has approximately 35,600 miles of roads and more highways, per square mile, than any other state. Erosion along these streets, highways, and other roads contributes suspended solids, sediment and other materials to storm sewer systems and waterways.

Vegetative cover (including the root system) plays an important role in preventing erosion by: shielding the soil surface from the impact of falling rain drops and flowing water, reducing the velocity of runoff; maintaining the soil's capacity to absorb water; and holding soil particles in place. In addition, vegetative cover may also be effective at removing heavy metals from runoff. However, utilizing vegetation to control erosion may require frequent monitoring, especially in the early stages when new vegetation is being established. Standards for vegetative cover, as well as other stabilization practices are found in the Standards for Soil Erosion and Sediment Control in New Jersey. A copy of these standards can be obtained from your Local Soil Conservation District (see Chapter 14 of this guidance document for a complete listing). Standards for vegetative cover and other stabilization practices are also found in the NJDOT Soil Erosion and Sediment Control Standards.

Sedimentation or deposition of material eroded by runoff from roads and roadsides may have significant impacts on water quality, and when not maintained, roadside erosion can significantly contribute to the pollution of stormwater runoff. Sedimentation not only causes an increase of costs for ditch, culvert and catch basin cleaning, it is also the single largest contributor of pollution to our nation's waters. Sedimentation can lead to a decrease in water carrying and storage capacities of streams and reservoirs, as well as destroy fish and other aquatic habitats. For example, sedimentation can fill the pores between gravel and cobble stream bottoms, greatly decreasing the spawning areas for many fish species (including native trout) and the habitat for macroinvertebrates, which serve as food for many fish species.

Outfall Pipe Stream Scouring Remediation

WHAT IS REQUIRED?

Minimum Standard

Public Complexes shall develop and implement a stormwater outfall pipe scouring detection, remediation and maintenance program to detect and control localized stream and stream bank scouring in the vicinity of outfall pipes operated by the Public Complex. This program shall identify all areas where localized stream and bank scouring occurs as a result of stormwater discharges from the Public Complex's MS4. These areas shall then be prioritized and repairs shall be scheduled and completed. Repairs shall be made in accordance with the Standards for Soil Erosion and Sediment Control in New Jersey at N.J.A.C. 2:90-1 (e.g., Conduit Outlet Protection 12-1), or N.J.A.C. 16:25A where NJDOT operates the Public Complex.

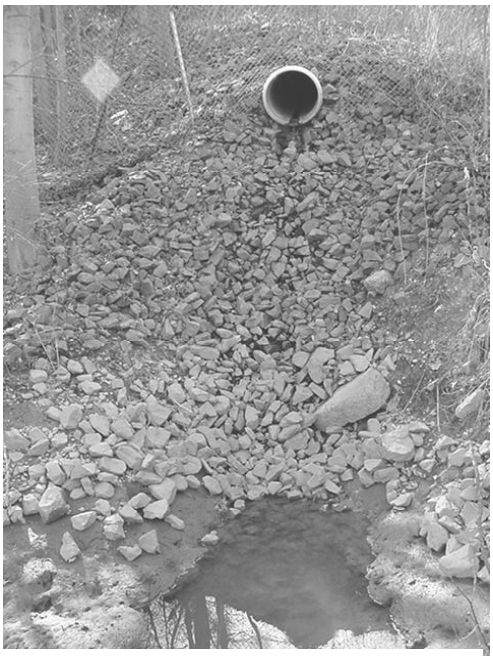

Scour holes are caused by excessive velocity of the discharge. Riprap may help dissipate the flow, reducing damage to the stream bank.

Measurable Goal

Public Complexes shall certify annually that they have met the Outfall Pipe Stream Scouring Remediation minimum standard. In addition, the Public Complex shall list the location of outfall scouring identified, the dates control measures are to begin, and the dates any control measures were completed.

Implementation Schedule

Within 18 months of the effective date of permit authorization, Public Complexes shall have developed and begun implementing an outfall pipe stream scouring detection, remediation and maintenance program. This program shall identify and prioritize all stormwater outfall pipes needing repairs, and then schedule and complete the repairs.

WHAT DOES THIS MEAN?

Public Complexes must develop a program to detect and control any active localized stream and stream bank scouring located on property operated by the Public Complex in the vicinity of outfall pipes operated by the Public Complex. The program does not apply to outfall pipes that discharge into the ocean or into any other waterways that are not "streams." For purposes of this SBR, a "stream" may be perennial or intermittent, may be tidal or non-tidal, and may be called, for example, a "river," "brook," "creek," "run," "branch," 'kill," or "ditch," or may have no name. Any areas that are found to be scouring must be prioritized based on the extent of erosion, and repairs must be scheduled and completed. All repairs shall be made using methods found in the Standards for Soil Erosion and Sediment Control in New Jersey (N.J.A.C. 2:90-1) or the NJDOT Soil Erosion and Sediment Control Standards (N.J.A.C. 16:25A) where NJDOT operates the Public Complex.

Where existing active localized stream and stream bank scouring is widespread, the Department does not expect that this program will result in the repair of all such scouring in the initial five-year permit term. Rather, the Department expects this program to include an ongoing, good faith effort to accomplish such repair, which may not be completed during the initial permit term. The Department also notes that this program applies to locations where there is active scouring, but not to locations where scouring occurred in the past, but has now ceased.

Repairing scouring may be problematic due to access restriction and/or Department permitting requirements. The Department's Land Use Regulation Program (www.nj.gov/dep/landuse) may require wetlands, stream encroachment or coastal permits prior to any repairs or remediation. Access and the need for permits/approvals may be considered when a permittee prioritizes and schedules repairs. The Department is attempting to streamline the process for getting wetlands and stream encroachment permits needed to repair localized stream and stream bank scouring and is aware that substantial time may be required to obtain these permits, which is one of the reasons why the Public Complex permit does not specify deadlines for completing repairs. Prioritizing outfall repairs in areas that allow easy access and don't require permits may be appropriate.

WANT TO KNOW MORE?

Outfall pipe stream scouring is the localized scouring of the stream bank or bottom caused by the discharge from the outfall pipe. This type of erosion to the stream bed and stream banks can cause sedimentation in the waterways. While sedimentation is a natural process, the accelerated accumulation of sediments in aquatic ecosystems leads to a decline in surface water quality and biodiversity. For more information on the harmful environmental impacts caused by sedimentation, please see the "Want to know more" section of the Road Erosion Control Maintenance BMP in this Chapter of the guidance document.

Scouring occurs when the velocity of stormwater leaving an outfall pipe erodes the stream bottom or the stream bank. To prevent scouring from occurring, the exit velocity of the water from the outfall pipes must be dissipated and/or reduced. Stream bank stabilization is needed when vegetative stabilization practices are not practical and where the stream banks are subject to heavy erosion. One way to prevent scouring from occurring is to reduce the quantity of stormwater that reaches eroding outfall(s) by infiltrating the stormwater before it reaches the outfall. For more information on how to do this, see the New Jersey Stormwater Best Management Practices Manual as amended.

Another solution to stream and stream bank scouring is to implement one or more of the engineering standards approved by the State Soil Conservation Committee. A copy of these standards can be obtained from your Local Soil Conservation District (see Chapter 14 of this guidance document for a complete listing). The NJDOT Soil Erosion and Sediment and Control Standards are available at: http://www.state.nj.us/transportation/.

Recommendations

The following recommendation may be beneficial, but is not required by the permit.

- To help reduce costs, when mapping your outfall pipes, look for signs of outfall pipe stream scouring (see Illicit Connection Program/Outfall Pipe Mapping in Chapter 6). This will ensure that you do not have to make multiple visits to the same outfall pipes.

Chapter 8 - Maintenance Yard Operations

This Chapter focuses on eliminating and/or minimizing the amounts of pollutants entering the waters of the State from Public Complex maintenance yard operations, including maintenance activities at ancillary operations. Ancillary Operations may include impoundment lots, recycling centers, solid waste transfer stations, mobile fueling stations, etc., owned or operated by the Public Complex. The concept behind these BMPs is to stress ways of improving stormwater quality through the implementation of pollution prevention and source reduction techniques. Many of the BMPs in this Chapter require the development of standard operating procedures (SOPs). **At a minimum, these SOPs must include the items listed in Attachment D of the permit.**

Inspections

Inspections are an important part of your maintenance yard operations. The entire maintenance yard needs to be inspected regularly, and these inspections should be documented as a part of your SPPP.

- Inspections of all Public Complex Maintenance Yard Operations shall be conducted regularly.

Discharge of Stormwater from Secondary Containment

Many maintenance yards have secondary containment for things such as aboveground fueling tanks and waste oil storage. These containment areas can accumulate water during storm events. This permit authorizes the discharge of clean stormwater from secondary containment, under the following conditions:

The permit authorizes the discharge of stormwater that accumulates in a secondary containment area if certain precautions are taken.

- The discharge pipe/outfall from a secondary containment area must have a valve and the valve must remain closed at all times except as described below. A Public Complex may discharge stormwater that accumulated in the secondary containment area if a visual inspection is performed to ensure that the contents of the aboveground storage tank have not come in contact with the stormwater to be discharged. Visual inspections are only effective when dealing with materials that can be observed, like petroleum. If the contents of the tank are not visible in stormwater, the Public Complex must rely on previous tank inspections to determine with some degree of certainty that the tank has not leaked. If the Public Complex cannot make a determination with reasonable certainty that the stormwater in the secondary containment area is uncontaminated by the contents of the tank, then the stormwater shall be hauled for proper disposal.

  (**NOTE:** If the stormwater from secondary containment is hauled, the Department recommends that copies of all hauling receipts are kept on site.)

De-icing Material and Sand Storage

WHAT IS REQUIRED?

Minimum Standard

Public Complexes must construct a permanent structure (a permanent building or permanent structure that is anchored to a permanent foundation with a impermeable floor, and is completely roofed and walled) for the storage of salt and other de-icing materials, if applicable. Once completed, Public Complexes shall perform regular maintenance and inspections of the permanent structure. Seasonal tarping shall be used as an interim BMP until the permanent structure is completed. Sand may be stored outside and uncovered if a 50-foot setback is maintained from storm sewer inlets, ditches or other stormwater conveyance channels, and surface water bodies.

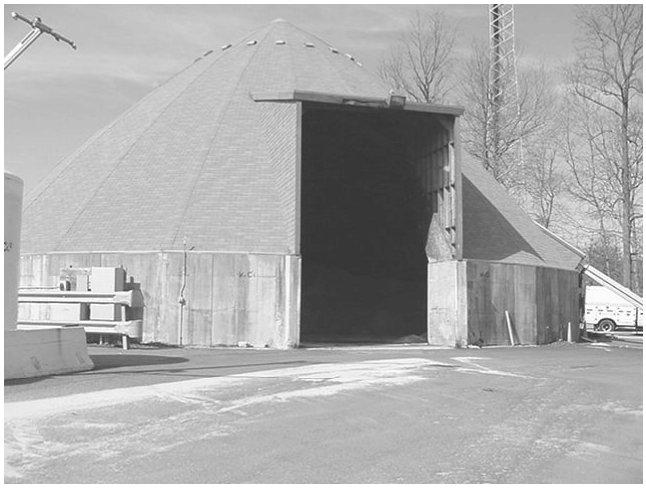

An acorn storage shed is an example of a "permanent structure."

Measurable Goal

Public Complexes shall certify annually that they have met the De-icing Material Storage minimum standard.

Implementation Schedule

Within 12 months from the effective date of permit authorization, Public Complexes shall implement the interim seasonal tarping BMP. Within 12 months of the effective date of permit authorization, Public Complexes will comply with the 50-foot buffer requirement for the outside storage of sand. Within 36 months from the effective date of permit authorization Public Complexes shall store all salt and de-icing materials in a permanent structure.

WHAT DOES THIS MEAN?

When salt and other de-icing materials are stored outside and uncovered, they can easily dissolve and be transported by stormwater. Public Complexes that store de-icing materials (including sand/salt mixtures) must construct an indoor storage to prevent stormwater from coming into contact with de-icing materials. This permanent structure for the storage of salt and other de-icing materials must be a permanent building or permanent structure that is anchored to a permanent foundation with an impermeable floor, and that is completely roofed and walled. An example would be an acorn structure, a monolithic dome (shotcrete dome), a shed or building. The permanent structure may have an open entryway for equipment access for loading and unloading. The structure cannot be a

Monolithic, or shotcrete dome.

This three sided storage structure does not comply with the permit minimum standard.

three-sided building. Public Complexes have 36 months from the effective date of permit authorization to construct such a structure. Until this structure is built, all de-icing materials may be stored outdoors between October 15 and April 30 as long as they are tarped when not in use (see Interim Seasonal Tarping below). Additionally, sand may be permanently stored outdoors and uncovered, as long as a 50-foot setback is maintained from any storm sewer inlets, ditches or other stormwater conveyance channels, and surface water bodies. For sand stored in three-sided uncovered bins, the 50-foot setback is measured from the open side of the bin. It is important to note that if the sand is covered the 50-foot setback is not required.

Good Housekeeping Practices for Salt and De-Icing Material Handling (as required by Attachment D of the permit)

The SPPP for De-icing Material Storage shall include the following required practices to ensure that Public Complex Maintenance Yard Operations prevent or minimize the exposure of salt and de-icing materials to stormwater runoff from storage, loading and unloading areas and activities:

The Public Complex should be implementing good housekeeping procedures to prevent and minimize spillage of salt and de-icing materials during loading and unloading activities.

- Prevent and/or minimize the spillage of salt and de-icing materials during loading and unloading activities.
- At the completion of loading and unloading activities, spilled salt and de-icing materials shall be removed using dry cleaning methods and either reused or properly discarded.
- Sweeping by hand or mechanical means of storage and loading/unloading areas shall be done on a regular basis. More frequent sweeping is required following loading/unloading activities. Sweeping shall also be conducted immediately following, as practicable, loading/unloading activities.
- Tracking of materials from storage and loading/unloading areas shall be minimized.
- Minimize the distance salt and de-icing materials are transported during loading/unloading activities.

Interim Seasonal Tarping - All Public Complexes must tarp all de-icing materials until a permanent structure is built. Interim storage measures must include, but are not limited to the following:

- Tarping materials that are not actively being used.

- The storage of de-icing materials (salt and de-icing products) outside is limited to October 15 through April 30. All salt and de-icing materials must be removed from the site prior to May 1 and may not be stored outside again until October 15.
- The implementing of a regular inspection, sweeping and housekeeping program to ensure that the material is maintained and stored in a proper manner.

WANT TO KNOW MORE?

The application of salt and sand on roads to improve conditions in winter weather has been a popular practice since the 1930s. Sand is widely used in colder climates where temperatures drop below 0° F. In New Jersey, where the climate is warmer, salt and other de-icing materials are primarily used to reduce ice bonding to road surfaces. The Department understands that during the winter, the application of sand and de-icing materials is a public safety issue that outweighs the possible environmental impacts of the application. However, the proper storage and handling of these materials is something within our control. In addition, during winter weather, salt and other de-icing materials are spread over large areas. However, at Public Complex storage facilities the discharges are concentrated and year round. The Department's goal is to ensure that these materials are properly handled, stored or covered, so that they are not transported by stormwater and discharged to surface and ground waters of the State.

Improper de-icing material and sand storage may result in stormwater runoff containing high amounts of sodium and solids. Sodium chloride (road salt) is an effective de-icer, but can be highly corrosive to stormwater facilities. Smaller waterways like small streams, rivers and ponds are at a higher risk to increases in salinity, which can threaten species that have lowered immune responses. Additionally, sodium chloride washed off roadways can eventually reach drinking water sources where even small traces can affect people with hypertension. Requiring indoor storage of salt and de-icing materials is an effective pollution prevention technique, which helps to eliminate pollutant loadings to surface and ground waters.

Recommendations

The following recommendations are not required by the permit, but should be taken into account when siting a new permanent structure:

- Locate the site at least 200 hundred feet away from nearby streams, wells, reservoirs and groundwater sources.
- Do not build your structure in designated well head protection areas.
- Ensure that the top elevation of the pad for the permanent structure, as well as the access way, is higher than the 100-year storm level.
- Control site drainage by diverting stormwater away from storage areas (e.g., by installing curbing, temporary berms, etc.).
- Place wind barriers at strategic areas where shipments of salt and sand are being loaded. This can help to reduce the possibility of windblown particles entering nearby areas.
- When constructing a deicing material storage structure, include a paved, impermeable access way.

- Public Complexes are encouraged to work together with neighboring municipalities, public complexes, and/or highway agencies (such as NJ Turnpike Authority, South Jersey Transportation Authority, NJDOT) to construct joint use de-icing material storage facilities.

Fueling Operations

WHAT IS REQUIRED?

Minimum Standard

Public Complexes must develop and implement standard operating procedures for vehicle fueling, and receiving of bulk fuel deliveries at maintenance yard operations. The standard operating procedures shall incorporate the required practices listed in Attachment D.

Measurable Goal

Public Complexes must certify annually that there is a vehicle fueling and bulk receiving standard operating procedures in place.

Implementation Schedule

Within 12 months of the effective date of permit authorization, Public Complexes shall have developed and begun implementing the required standard operating procedures for fueling operations.

WHAT DOES THIS MEAN?

The minimum standard requires Public Complexes to develop a SOP for vehicle fueling and receiving of bulk fuel. **The SOP shall, at minimum, include the following:**

Fueling (as required by Attachment D of the permit)

- No topping off vehicles, mobile fuel tanks, and storage tanks. Drip pans must be used under all hose and pipe connections and other leak-prone areas **during** bulk transfer of fuels.
- Block storm sewer inlets, or contain tank trucks used for bulk transfer, with temporary berms or temporary absorbent booms during the transfer process. If temporary berms are being used instead of blocking the storm sewer inlets, all hose connection points associated with the transfer of fuel must be within the temporary berms during the loading/unloading of bulk fuels. A trained employee must always be present to supervise during bulk fuel transfer.

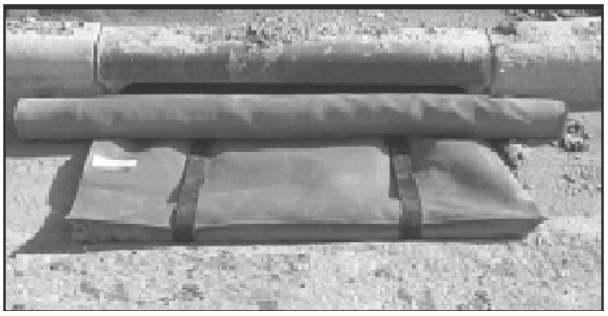

Storm drain inlets blocked during bulk fuel transfer.

- Clearly post, in a prominent area of the facility, instructions for safe operation of fueling equipment, and appropriate contact information for the person(s) responsible for spill response.
- Any equipment, tanks, pumps, piping and fuel dispensing equipment found to be leaking or in disrepair must immediately be repaired or replaced.

(**NOTE -** All repairs and replacement of such equipment, pumps, piping, and fuel dispensing equipment should be made in accordance with any applicable local, State, or federal regulations and/or requirements.)

Recommendations

The following recommendations may be beneficial, but are not required by the permit.

- Use only pumps, hoses and containers that have been approved for fuel use.
- When installing new tanks consider aboveground storage tanks rather than underground storage tanks.
- Designated transfer areas should be paved with concrete and be designed with containment.
- When practical, vehicle fueling should be done at designated fueling areas rather than on location (mobile fueling) where employees are less equipped to handle spills.
- Fueling stations can be regional or shared with other Public Complexes or other public agencies to help to reduce costs of operation and upgrading.
- Ensure that all underground storage tanks are maintained in accordance with the New Jersey Underground Storage of Hazardous Substances Act (N.J.S.A. 58:10A-21 et seq.) and the Department's Underground Storage Tanks rules at N.J.A.C. 7:14B, if applicable.

Vehicle Maintenance

Vehicle maintenance should be performed indoors whenever possible.

WHAT IS REQUIRED?

Minimum Standard

Public Complexes shall develop and implement a standard operating procedure (SOP) for vehicle maintenance and repair activities that occur at maintenance yard operations, if applicable. The SOP shall include the required practices listed in Attachment D. The SOP shall include regular inspections of all maintenance areas and activities.

Mesurable Goal

Public Complexes must certify annually that there is a vehicle maintenance standard operating procedure in place and that regular inspections and maintenance are being performed.

Implementation Schedule

Within 12 months of the effective date of permit authorization, Public Complexes shall have developed and begun implementing the required standard operating procedures for Vehicle Maintenance.

WHAT DOES THIS MEAN?

Public Complexes are required to develop and implement a vehicle maintenance SOP to eliminate and/or minimize the amount of pollutants entering surface and ground water from vehicle maintenance activities. **The SOP shall, at minimum, include the following:**

Vehicle Maintenance (as required by Attachment D of the permit)

Perform all vehicle and equipment maintenance at an indoor location with a paved floor whenever possible. For projects that must be performed outdoors that last more than one day, portable tents or covers must be placed over the equipment being serviced when not being worked on, and drip pans must be used.

This means that if maintenance is being performed outdoors on exposed equipment (engine blocks, lawn equipment, and tractors) and won't be completed in one day, then the exposed machinery should be covered with a tarp or a portable tent when not being worked on. If the machinery is not exposed (hood of vehicle can be closed, tractor engine cover replaced), then no tarp is required. Drip pans are only required if equipment that is being serviced could possibly leak oil, hydraulic fluids or other fluids, and will be left outside for a time period greater than one day.

Important Note - Floor drains within maintenance garages, if connected to the MS4, are illicit connections and must be eliminated in accordance with the Public Complex's Illicit Connection Elimination Program (see Chapter 6 of this guidance document). All other discharges from floor drains within maintenance garages to surface or ground waters the State require a separate NJPDES permit in accordance with N.J.A.C. 7:14A. Any such discharge must be ceased until a final effective NJPDES permit is issued by the State. The Department recommends, however, that all floor drains in maintenance garages be permanently sealed, and that all discharges to "motor vehicle waste disposal wells" be closed in accordance with N.J.A.C. 7:14A-8.4. If you have any questions or concerns about a floor drain or about "motor vehicle waste disposal wells," contact the Department's Bureau of Nonpoint Pollution Control at (609) 633-7021.

Good Housekeeping Practices

Good housekeeping includes storage of materials like waste oil.

WHAT IS REQUIRED?

Minimum Standard

Public Complexes must implement good housekeeping procedures for all materials or machinery listed in the Inventory Requirements for Maintenance Yard Operations prepared in accordance with Attachment D. These good housekeeping procedures include, but are not limited to, the required practices listed in Attachment D at maintenance yard operations (including maintenance activities at ancillary operations), if applicable.

Measurable Goal

Public Complexes must certify annually that they have met the Good Housekeeping Practices minimum standard.

Implementation Schedule

Within 12 months of the effective date of permit authorization, Public Complexes shall have developed and begun implementing the required standard operating procedures for Good Housekeeping Practices.

WHAT DOES THIS MEAN?

The intent of this program is to help maintain a clean and orderly work place. Public Complexes are required to do this by maintaining up-to-date inventories, conducting regular inspections and educating all employees about good housekeeping practices. Requirements and recommendations include basic good housekeeping practices, such as eliminating or minimizing exposure of materials to stormwater, maintaining a clean and orderly work environment, cleaning up any spills as soon as they are discovered, properly disposing of any hazardous materials, etc. Some examples of how to do this might include keeping oil, oil filters, hydraulic and transmission fluids, greases, cleaning solutions, antifreeze, coolants and batteries indoors or covered and on a spill platform.

Inventory Requirements for Maintenance Yard Operations (including Ancillary Operations)

In accordance with Attachment D of the permit, Public Complexes shall include for maintenance yard operations an inventory that includes the following:

- A list to be made part of the SPPP of general categories of all materials or machinery located at the maintenance yard, which could be a source of pollutants in a stormwater discharge. The materials in question include, but are not limited to: raw materials; intermediate products; final products; waste materials; by-products; machinery and fuels; and lubricants, solvents, and detergents that are related to the maintenance yard operations or ancillary operations. Materials or machinery that are not exposed to stormwater or that are not located at the maintenance yard or related to its operations do not need to be included.

In addition to the Inventory Requirements for Maintenance Yard Operations, **the Good Housekeeping SOP shall also include the following:**

Good Housekeeping (as required by Attachment D of the permit)

- Properly mark or label all containers. Labels must be kept clean and visible. All containers must be kept in good condition and tightly closed when not in use. When practical, containers must be stored indoors. If indoor storage is not practical, containers may be stored outside as long as they are covered and placed on spill platforms. An area that is graded and/or bermed that prevents run-through of stormwater may be used in place of spill platforms. Outdoor storage locations must be regularly maintained.
- Conduct cleanups of any spills or liquids or dry materials immediately after discovery. Clean all maintenance areas with dry cleaning methods only. Spills shall be cleaned up with a dry, absorbent material (i.e., kitty litter, sawdust, etc.) and the rest of the area is to be swept. Collected waste is to be disposed of properly. Clean-up materials, spill kits and drip pans must be kept near any liquid transfer areas, protected from rainfall.

Important Note: Discharges of hazardous substances shall be reported to the NJDEP Action Hotline at 1-877-WARN-DEP (1-877-927-6337) in accordance with N.J.A.C. 7:1E-5.3 (a copy of the rule may be found at: http://www.nj.gov/dep/rpp/brp/download.htm). Additional information on discharges of hazardous substances and notification requirements may be found at: http://www.state.nj.us/dep/enforcement/relprev/dpcc/document/dcrgid.htm.

Recommendations

The following recommendations may be beneficial, but are not required by the permit.

- Dispose of stockpiles of scrap you will never use.
- Switch to non-toxic chemicals whenever possible.
- Equipment should be kept clean of excessive build-up of oil and grease, and all equipment should be checked regularly for drips or leaks.
- Batteries should be stored indoors, and any leaking, cracked or broken batteries should be handled in accordance with applicable federal and/or State rules and regulations.
- Check incoming vehicles and equipment for leaks (including delivery trucks and employee and subcontractor vehicles). Do not allow leaking vehicles or equipment on site.

WANT TO KNOW MORE?

Fueling, Vehicle Maintenance, and Good Housekeeping

When stormwater is exposed to pollutants associated with maintenance and fueling activities it becomes polluted with toxic or other deleterious materials (e.g., petroleum hydrocarbons, heavy metals and organics). Many times this stormwater contamination is a result of human errors, such as topping off fuel tanks, not being attentive during loading and unloading procedures, improper cleanup after a spill occurs and improperly storing materials associated with maintenance activities (e.g., fertilizers, pesticides, waste oil, waste solvents, scrap materials, and material stock piles). The fueling, maintenance and good housekeeping SOPs, if properly implemented, help eliminate or minimize stormwater contamination from these activities.

Fueling and maintenance activities can contribute to local stormwater pollution when not managed properly. Petroleum hydrocarbons, found in diesel fuel and waste oils and lubricants, are harmful to aquatic life. Hydrocarbons that have a lighter density can float on the surface of the water harming

waterfowl, while dense hydrocarbons sink to the bottom and accumulate in the sediment, affecting bottom feeders and other organisms. Heavy metals, which are found in fuel and may leach from scrap materials and batteries, tend to have a cumulative effect on the food chain since they can accumulate in the tissues, as they are passed up the food chain, becoming more and more potent. In addition, heavy metals have been shown to cause several detrimental effects on various species of shellfish, including inhibited feeding behavior, delayed shell growth, depression of cardiovascular function and respiration and a suppression of growth or death of eggs, embryos or larvae. Organic compounds, like BTEX found in gasoline, and other organic compounds found in solvents are known mutagens, teratogens, and carcinogens.

When good housekeeping practices are not implemented, these materials are potentially exposed to stormwater. Once that happens the only effective way to remove the pollutants is by providing costly treatment. Stormwater is difficult at best to treat due to inherent problems like variability of rainfall and its intensity. If maintenance yards are large, storage of stormwater for treatment requires the construction of large lined basins. Instead, it is far more cost effective to implement BMPs designed at eliminating or minimizing contact between stormwater and source materials. Properly implemented Good Housekeeping SOPs do just that and prevent the need for costly end of pipe treatment systems.

Equipment and Vehicle Washing

Equipment and vehicle washing is not authorized under the Public Complex Permit (except for washwater from rinsing of certain de-icing and beach maintenance vehicles and equipment as authorized in Part I, Section A.2.d.) The discharge of equipment and vehicle washwater from maintenance yards to the surface and ground waters of the State may be unlawful under the Water Pollution Control Act unless a separate NJPDES permit is obtained for such discharge.

Chapter 9 - Employee Training

Employee training is one of the most important aspects of the permit. All the time and effort undertaken to develop a stormwater program and to write a SPPP is wasted if employees aren't properly trained and do not clearly understand what is expected of them. Sometimes it is difficult to change how people do things. Stressing employee training and not dismissing it as an afterthought shows employees that your Public Complex is serious about its stormwater program and protecting the environment.

WHAT IS REQUIRED?

Minimum Standard

Public Complexes shall develop and conduct an annual employee training program for appropriate employees on appropriate topics. At a minimum, annual employee training will include the following topics:

i. Waste Disposal Education –Training shall include how to respond to inquiries regarding proper waste disposal.

ii. Control Measures – Training shall include an overview of the Pet Waste Control, Litter Control, Wildlife Feeding Control, Illicit Connection Prohibition and Improper Waste Disposal Control measures, their requirements, enforcement policy, and hazards associated with improper waste disposal.

iii. Vegetative Waste – Training shall include details on handling, storage and disposal of vegetative wastes and the frequency of pickups and schedules. Training shall also include alternatives such as composting and recycling.

iv. Illicit Connection Elimination and Outfall Pipe Mapping – Training shall include information regarding the hazards associated with illicit connections and details of the program including investigation techniques, physical observations, field sampling, and mapping procedures.

v. Street Sweeping – Training shall include sweeping schedules and record keeping requirements.

vi. Stormwater Facility Maintenance - Training shall include catch basin cleaning schedules and record keeping requirements.

vii. Road Erosion Control and Outfall Pipe Stream Scouring Remediation – Training shall include identifying road erosion and outfall pipe scouring and repairs.

viii. Maintenance Yard Operations (including Ancillary Operations) – Training shall include de-icing material storage, fueling, vehicle maintenance, equipment/vehicle washing and good housekeeping SOPs, if applicable.

ix. Construction Activity / Post-Construction Stormwater Management in New Development and Redevelopment – Training shall include information regarding the requirement to obtain a NJPDES construction activity stormwater permit (see Part I, Section A.5.a and A.5.b of this

permit) and requirements for Post-Construction Stormwater Management in New Development and Redevelopment (See Part I, Section F.3 of this permit).

Measurable Goal

Public Complexes must certify annually the date of the annual employee training.

Implementation Schedule

Training shall begin 12 months from the effective date of permit authorization.

WHAT DOES THIS MEAN?

Employee training is intended to increase employee awareness of the stormwater program and its importance, as well as their role in its implementation. It is believed that if the employees understand what is required of them and why it is being required, they will be more likely to comply with the conditions of the permit. Employees must be trained about the various topics listed above, but the employee training program need not be limited to those topics. All employees should be involved in the training program, but the permit requires training only on those particular topics that are relevant to their job descriptions. For example, maintenance personnel shall be trained on the maintenance yard SOPs, but they don't need to be trained on the design standards in the new Stormwater Management Rules.

Overall, this training program is very important to the success of the Stormwater Pollution Prevention Plan required by this permit. Since the goal of this training is to stress the importance of the permit and the required practices, the training should encourage employees to take an active and environmentally responsible role in the stormwater program.

WANT TO KNOW MORE?

In many ways, education and training may be considered the most important aspect of this program. It is widely recognized that education is the key to providing people with the knowledge, awareness, attitudes and values that will help them play their part in sustaining the environment, not only while they are at work but also throughout life. This SBR specifically targets the employees that work for Public Complexes.

Employee training has two purposes. The first is to familiarize the workers with the permit requirements, and what specifically will be required of them. The second is to give the employees an overview of the stormwater program, why it is being done, and why their participation is important. As mentioned above, if the employees do not understand what is required of them and why it is required then they will not do it. As philosopher Baba Dium said, "We only conserve what we love, we only love what we understand, we only understand what we know and we only know what we are taught."

Chapter 10 - Additional Measures

Additional Measures (AMs) are measures (non-numeric or numeric effluent limitations) that are expressly required to be included in the stormwater program by an areawide or Statewide Water Quality Management Plan (WQM plan). AMs may modify or be in addition to SBRs.

Additional Measures may be required by a Total Maximum Daily Load (TMDL) approved or established by the US Environmental Protection Agency, a regional stormwater management plan, or other elements of adopted areawide or Statewide WQM plans. If a Public Complex has to implement an AM as a result of such a WQM plan, the Department will provide written notice of the AM to that Public Complex. The Department will also list each required AM in the permit through minor modifications to the permit. The AMs, other than numeric effluent limitations, will specify the measures that must be implemented, the measurable goals and an implementation schedule for each BMP.

A Water Quality Management Plan is a plan that is prepared pursuant to Sections 208 and 303 of the Federal Act and the Water Quality Planning Act, N.J.S.A. 58:11A-1 et seq., including the Statewide, areawide, and county WQM plans. Department rules governing WQM plans are found at N.J.A.C. 7:15.

The Total Maximum Daily Load is the sum of individual wasteload allocations for point sources, load allocations for nonpoint sources of pollution, other sources such as tributaries or adjacent segments, and allocations to reserve or margin of safety for an individual pollutant.

More information on Water Quality Management Plans, and the most recent updates concerning Total Maximum Daily Loads can be found at the following website:

http://www.nj.gov/dep/watershedmgt/tmdl.htm.

Regional stormwater management planning is a water resource management strategy that identifies and develops solutions to problems that can be managed most effectively on a regional basis. The product of this planning process, the regional stormwater management plan, spans the boundaries of individual properties, neighborhoods, municipalities, and even county borders. A plan may address an existing water quantity issue, such as localized flooding; an existing water quality issue, such as excess pollutant loading; or issues of water quantity and quality that may be generated by future development. Regional stormwater planning creates a combination of regulations and actions tailored to the specific needs of a drainage area, but it does not reduce environmental protection. Rather, it allows regulations more flexibility to match the concerns, conditions, and features of regions that are connected by a common drainage area. More information on regional stormwater management plans can be found in subchapter 3 of the Stormwater Management rules (N.J.A.C. 7:8) and in Chapter 3 of the New Jersey Stormwater Best Management Practices Manual

(http://www.state.nj.us/dep/watershedmgt/bmpmanualfeb2004.htm).

As of the date this Public Complex permit guidance document was issued, no AMs have been adopted.

Chapter 11 - Optional Measures

At the Public Complex's discretion, the stormwater program may also include Optional Measures, which are Best Management Practices (BMPs) that are not implemented as Statewide Basic Requirements or Additional Measures, but that prevent or reduce the pollution of the waters of the State. These Optional Measures (OMs) are voluntary BMPs that may further enhance a Public Complex's stormwater program and may target a specific pollutant of concern or problem affecting the Public Complex. The SPPP should include any Optional Measures that the Public Complex plans on implementing, along with an implementation schedule. If a Public Complex does not implement an Optional Measure identified in their SPPP, the Public Complex will not be considered to be in violation of the permit.

Suggested Optional Measures include:

- Wildlife Management;
- Fertilizer and Pesticide Management Program;
- Retrofit of Existing Stormwater Management Measures;
- Road De-icing; and
- Planting of Native Vegetation in Existing Landscapes.

Public Complexes are not limited to those topics and may develop an OM on their own if they feel it will help to reduce or prevent the pollution of the waters of the State. Whenever an OM is implemented it should be reviewed periodically to check its effectiveness. If the desired results are not being accomplished the OM should either be improved, modified or abandoned.

Wildlife Management

The Canada goose (*Branta canadensis*) is probably the most commonly recognized bird in New Jersey, and with good reason. New Jersey currently has about 85,000 geese, which places us with the highest density of Canada geese in the United States: 12 geese per square kilometer.

However, this wasn't always the case. In 1967, one subspecies, the Aleutian Canada goose, was listed as endangered by the U.S. Fish and Wildlife Service. This was primarily due to the introduction of a non-native arctic fox species to their nesting island, which became predatory on the defenseless geese. This introduction led to a population decline to approximately 800 geese. The Canada goose population was declining so rapidly that state and federal biologists resorted to importing thousands of mating pairs of geese from the Midwest in the 1960's to ensure their survival in the Mid-Atlantic States. Under the cover of the 1916 Migratory Bird Treaty (which prohibited spring shooting, limited the shooting season, and put a quota system on bag limits) and the federal wildlife agency, the geese began to thrive.

Today, Canada geese populations are broken down into two distinct groups: the migratory population and the resident population. Currently, the migratory population is below management objectives, and thus is still strictly protected by the U.S. Fish and Wildlife Service and the 1916 Migratory Bird Treaty. The resident population, however, continues to grow at an alarming rate. If nothing is done to control the resident geese in the Atlantic flyway, their population is estimated to exceed 1.6 million by 2012.

This Optional Measure addresses the concerns raised by the ever increasing Canada goose population in New Jersey, and the impacts they have on our environment.

Canada geese are grazers, their diet consisting mainly of grasses and other green vegetation. They tend to be attracted to urban sites with short lawns, and they will almost always choose fertilized lawns over unfertilized lawns. For these reasons geese are often found congregating on golf courses, school grounds, playgrounds, sports fields and any other well-manicured lawn.

Canada geese nest in the spring and nesting sites are usually surrounded by, or very close to, water. Water provides the geese with access to food, drink and an escape from predators. Nesting females also tend to use the same nesting site year after year, which makes it difficult to remove them once they breed in an area. In addition to this, once a year the geese begin a complete molt of their flight feathers. During this period the geese will be unable to fly, thus making it necessary for them to be in areas near water with a close food source.

These characteristics of the Canada goose, in addition to their increasing populations, often conflict with human interests, necessitating some form of management. Depending on the severity of the problem, non-lethal or lethal methods may be chosen. The management control methods listed below are only recommendations and may be implemented as needed. However, using two or more of the following techniques will provide better results than relying on just one method.

Non-Lethal Control Measures

Barriers

Barriers can be effective in small areas where the geese tend to walk from their feeding source to the water. A low fence or other barrier, such as high vegetation, that prevents the geese from easily moving from grassy areas to the water may be all that is needed to solve the problem. Fencing works best during their summer molt when the birds cannot fly into the water. The barriers can either be permanent or temporary.

Overhead Wire Grids

Overhead wire grids are typically made out of polypropylene lines and placed over a body of water, which is usually supported by fiberglass rod posts that are evenly spaced around the perimeter. A two-strand perimeter fence should also surround the area to deny entry to the pond from the sides. The overhead wire grid prevents the geese from landing in the water by reducing the long take-off and landing zones needed by the Canada geese.

Scare Decoys

Scare decoys, such as the Dead Canadian Goose, will discourage geese from nesting or feeding near a body of water. This method is typically most effective where the problem area is small in size.

Repellants

Repellants are substances that can be sprayed on the lawn to deter the geese by making the grass taste bad to them. Biodegradable deterrents using human-safe food flavoring derived from grapes (methyl anthranilate) can be sprayed on an area and will last about 14 days per application. Other deterrents contain an ultraviolet repellant to visually deter the birds. Before this method is used, however, local regulations must be checked to ensure use near ponds or wetlands.

Sound Deterrents

Sound deterrents must be in place early in the season to be effective. Sound deterrents can be as simple as banging on ordinary pots and pans, or as complex as pistol-launched pyrotechnics, firecrackers, or liquid propane gas cannons. To be most effective the sound deterrents should go off under the birds as they come in to land. Sound deterrents are the best option for large-scale geese problems, but may not be suitable for residential or public areas. Additionally, a permit to discharge a firearm may be required.

Visual Deterrents

Visual deterrents include items such as balloons, streamers, flags and scarecrows. Large red, white, yellow, or mylar balloons have proven to be most effective. They should be filled with helium and tethered on a monofiliment line to scare the geese. To increase the balloons' effectiveness, large eyespots can be drawn on. Any visual deterrent used should be moved periodically to make sure that the geese don't become accustomed to them

Hazing

Hazing the geese includes chasing the geese from any area where they are not welcome. People or livestock herding dogs that are trained to chase geese can be used to haze the geese, however special permits may be required to use dogs to haze geese. This can be an effective method of control in areas where noise and appearance are important considerations.

Education

Educating the public is a very important part of goose management. Many times people attract large number of geese to an area by feeding them. By feeding the geese, they are only encouraged to stay in the area. (Many people also don't realize that bread is not a nutritional food source for geese and can actually harm them.) Under this permit, Public Complexes are required to adopt and enforce a regulatory mechanism prohibiting the feeding of any wildlife (excluding confined animals, for example wildlife confined in zoos, parks, or rehabilitation centers or as part of academic research or unconfined wildlife at environmental education centers). In addition to educating the public about not feeding the geese, they should also be made aware of the ideal habitat of the Canada goose, and what they can do to make their property less attractive to the geese. Since geese typically like to live near ponds, access to these ponds should be limited. In the springtime, the ponds can be fenced off, or high vegetation can be allowed to grow around the pond. If the pond has an aerator, it should be turned off in the wintertime to allow the pond to freeze over. Also, old goose nests or goose nest platforms should be removed (no permit is required to remove these).

Lethal Control Measures

Hunting

The most effective, but controversial, method of population control of the Canada geese is to allow a hunting season for them. Several states, including New Jersey, currently have a hunting season for Canada geese. There are presently three hunting seasons for Canada geese in New Jersey: the regular Canada goose season, September season and winter season, with bag limits ranging from two to five geese. More information can be found on this topic by visiting the New Jersey Fish and Wildlife webpage (www.njfishandwildlife.org), or the NJDEP webpage (www.state.nj.us/dep/fgw/).

Egg Addling, Oiling, or Replacing

One means of population control for the Canada goose is to ensure that they don't produce offspring. The easiest way to accomplish this is to alter their eggs so that they are no longer viable.

There are several ways that this can be done, however, it should be kept in mind that if a goose cannot find its egg, or realizes that it has been tampered with, it will simply find a new nest and lay more eggs. Additionally, all of these methods can be very time consuming and dangerous. The nest must be watched for times when the geese are not nearby so that they do not see their eggs being tampered with. If the geese do see someone near their nest, they may become aggressive.

Egg addling means that the eggs are shaken to mix up the contents, or a small hole is poked in the shell so that the inside can be stirred up. Both of these methods will destroy the egg, making sure it does not hatch.

Egg oiling involves rubbing a thin layer of oil on the outside of the entire shell. This prevents the egg from "breathing" and suffocates it.

Replacing the real eggs with wooden or other artificial eggs may also be effective. Remember, if the eggs are simply removed, the geese will just lay more. If the eggs are replaced with artificial eggs, though, the geese will continue to incubate them as if they were real.

Although the resident population of the Canada goose continues to grow at an alarming rate, and continue to claim more and more recreational areas as their own, this is not the major complaint. The major complaint is not attributed to what they take from these areas, but rather what they leave behind. The average Canada goose produces two to four pounds of droppings a day. These droppings can contain salmonella bacteria that persist (in wet droppings) for up to one month.

Substances that are derived from goose droppings can cause water quality problems, including noxious algal blooms, beach closings, and the spread of fowl related diseases.

When geese droppings are allowed to enter the water, the nutrient level increases. This can lead to excessive plant and algal growth, which is directly related to a loss of habitat and wildlife including fish kills and eutrophication. Eutrophication can permanently change the character of a lake by increasing the organic content, eventually converting it into marsh and land areas.

Many beach closings have also been attributed to geese. When an excessive number of geese congregate near a beach or waterway, their fecal matter can sometimes overload the normal capacity of a beach to absorb natural wastes, thus degrading the water quality and requiring the area to close to the public.

Finally, geese can be responsible for the spread of some fowl related diseases. Among these are viral, bacterial and parasitic diseases, to which only waterfowl are susceptible.

The costs associated with implementing this optional measure can be highly variable, depending on the method(s) chosen, and the frequency they must be repeated. Additionally, some of the options are more time consuming or require special permits, which may add to the pre-existing cost of the actual control measure.

While it is difficult to quantify the benefits an area will receive through managing goose populations, it is reasonable to assume that any reduction in their population will have a positive effect on the environment. The amount of benefits received will depend on the severity of the problem in the first place, the method(s) chosen to control the goose populations, and how frequently the control methods are repeated.

More information on this topic can be found at:

http://www.state.nj.us/dep/watershedmgt/DOCS/BMP_DOCS/Goosedraft.pdf
http://www.fw.umn.edu/research/goose/html/default.html

http://www.wildlifedamagecontrol.com/canadageese.htm
http://www.pacd.org/resources/lake_notes/geese02.htm
http://www.birdcontrolsupplies.com/bobbexg.htm
http://www.wnrmag.com/stories/1998/dec98/geese.htm

Fertilizer and Pesticide Management Program

The Local Public Education Program includes educating appropriate users and employees of the Public Complex on proper application, storage and disposal of pesticides and fertilizers, and the benefits of using native or well adapted vegetation that requires little or no fertilization. The Department recommends that Public Complexes adopt, as an Optional Measure, fertilizer and pesticide management programs that restrict the Public Complex's use of such chemicals. This is especially important in communities located near lakes, rivers or bays.

Fertilizer Management

A fertilizer management program may include the following restrictions:

- Require soil samples to be tested to determine which nutrients, if any, are necessary before any fertilizers are applied.
- Allow nitrogen-based fertilizers only in slow-release formulas.
- Prohibit the use of phosphorous-based fertilizers unless soil testing demonstrates a need for it.
- Prohibit the use of fertilizer within 25 feet of any lake, stream, drain, river, wetland, or natural waterway.
- Require that fertilizers be watered within 24 hours of application.
- Prohibit fertilizer applications when heavy rainfall is anticipated.
- Ban the application of fertilizers before April 15 and after November 15, when there is a risk that frost will prevent the nutrients from being absorbed into the soil.
- Require applicators to take precautions against applying fertilizers to impervious surfaces, such as driveways and sidewalks, where the nutrients will simply wash away into storm sewers or nearby waterways with the next rainfall.

Pesticide Management

A pesticide management program should, at a minimum, conform with the Pesticide Control Code (N.J.A.C. 7:30). The program, for example, may address the following issues:

- The proper storage of pesticides (N.J.A.C. 7:30–1.9, 9.4)
- Pesticide application/use and safety equipment (N.J.A.C. 7:30–2.2, 2.3, 9.3, 9.7, 10.3)
- The proper methods of disposal of pesticides, their containers, and equipment that holds or has held a pesticide (N.J.A.C. 7:30–9.6, 11.2, 11.3)
- Accidental pesticide misapplications, spills, and emergency containment (N.J.A.C. 7:30–9.14, 9.15, 11.1)

Retrofit of Existing Stormwater Management Measures

For more information on this topic please see Chapter 8 of the New Jersey Stormwater Best Management Practices Manual as amended.

(http://www.state.nj.us/dep/watershedmgt/bmpmanualfeb2004.htm).

Road De-icing

Road de-icing is a common practice during and after winter storms. Essentially it consists of applying salt (NaCl), or other types of de-icing materials, to lower the freezing temperature of the precipitation. Lowering the freezing temperature of the snow and ice causes it to melt quicker, and allows motorists to travel roadways safely. Excessive use of de-icers can be environmentally detrimental due to increasing sediment loads and soluble materials entering surface and ground water. The excessive use of de-icers may adversely affect roadside vegetation, pollute waterways and/or groundwater, as well as adversely affect aquatic life or cause corrosion.

However, the use of road salt is a public safety issue as well as a water quality issue. The short term need for clear, safe winter roadways outweighs the environmental impacts. None of the recommendations here are to be construed as advocating the reduction of de-icing efforts to the point of jeopardizing public safety. Rather, most are simple techniques that can be easily integrated into existing de-icing practices that can reduce the impact on surface and ground water quality.

Road salts were identified in the early 1970's as a pollutant source after high levels of sodium, calcium and chloride were found in public water supply wells. Aside from contaminating potable surface and ground water, high levels of sodium chloride can kill roadside vegetation, impair aquatic ecosystems and corrode infrastructure such as bridges, roads and stormwater management devices.

Application of typical de-icers and alternative de-icers should be considered when formulating a de-icing policy. New, safer alternatives are being developed that may lesson our dependence on traditional de-icers. Alternative de-icing materials and techniques should be considered whenever possible.

Application of De-icing Materials

In general, the Department promotes the smart use of salt and other de-icing materials. This concept encourages Public Complexes, municipalities, commercial facilities and others to consider a wide range of options when formulating a management policy on the application of de-icing materials. These de-icing policies should take into consideration storm characteristics, roadway conditions, road characteristics, the type and availability of equipment, and availability and need of alternative de-icing materials (other than NaCl). Reduced application rates and alternative de-icing practices should be incorporated in environmentally sensitive areas, areas that drain to surface drinking water sources (reservoirs), and groundwater recharge areas (e.g., ground water supply wells, and wellhead protection areas). Reduced application rates may also be considered on secondary roads or on other roads rarely traveled.

One of the most effective means in preventing over-application is the use of calibrated spreaders, which ensure delivering de-icing materials at the predetermined optimal application rate. Automated controls on spreaders are recommended to ensure a consistent and correct application. The spreader should be calibrated prior to a snow storm event and periodically during the snow season, regardless of whether or not automatic or manual controls are used. A regular schedule of maintenance for snow removing equipment (including salt spreaders) should be incorporated into a snow management policy. Poor maintenance of the snow removal equipment is often responsible for excessive salt use. Guidelines for the calibration of spreaders and determination of application rates are given in the EPA document *Manual for De-icing Chemicals: Application Practices*.

De-icing is recommended for snowfalls of less than two inches and for road surfaces with packed snow already on the road surfaces. A management policy of de-icing of roadways should consider

factors such as length and duration of the snowfall and initial conditions of the roadway. The de-icing of road surfaces after the snow has accumulated will only result in the removal of the de-icing materials with the snow when plowed.

De-icing Materials and Alternative De-icing Materials

In most instances winter de-icing materials consist of rock salt (NaCl) or a combination of rock salt and sand. The effectiveness of this mixture is significantly reduced at temperatures below 25 degrees Fahrenheit. As a result, it is not practical to increase the amount of rock salt when spreading below 25 degrees Fahrenheit. At temperatures lower than 25 degrees Fahrenheit, rock salt can be applied with calcium chloride (CaCl), which increases the effectiveness of the deicer at temperatures down to -25 degrees Fahrenheit.

Various mixtures of sodium chloride, calcium chloride and sand can be used depending on the sensitivity of the area. The State of Connecticut recommends a 7:2 sand pre-mix be used in sensitive areas. Pre-mix is 3.5 parts sodium chloride and 1 part calcium chloride by weight. Use of higher ratios of calcium salts is recommended environmentally since calcium poses fewer problems than sodium.

New de-icing materials are periodically developed which are more environmentally friendly and can be used in sensitive areas or as an alternative to traditional de-icers. In some instances, the costs of these new materials are prohibitive on a large-scale basis but they could be used in smaller target areas.

One of the best alternatives to de-icing materials is sand. Sand has no de-icing properties but when used as a mix with rock salt, can be helpful in areas where increased traction is needed and where a reduction of rock salt is desired. Ash and cinders are another low tech alternative to calcium chloride. While using sand, gravel, ash and cinders reduce the amount of sodium, they have their own environmental problems, specifically, causing sedimentation and increasing suspended solids in receiving waters.

NOTE: The New Jersey Department of Environmental Protection does not promote the use of any specific product discussed below.

Calcium Chloride: Has a lower freezing point than rock salt. Absorbs moisture readily and stays on the pavement longer than rock salt. Used in "wetting" of roadways prior to snowfall.

Calcium Magnesium Acetate: Less effective, better environmentally.

Magnesium Chloride: Basically as effective as calcium chloride in adhering to the road surface and has comparable freezing temperature.

Potassium Acetate: Does not have the chloride residual problems associated with other de-icers. Does not cause corrosion and has a low environmental impact.

Potassium Chloride: Is similar in performance and cost to calcium chloride and magnesium chloride. Has a similar chloride residual problem.

Urea: Less corrosive than rock salt and has little to no effect on roadside vegetation.

Reduction of the Application of De-icing Materials

Remote sensors along roadways can be used to determine which parts of roadways have ice on them. Some sensors can detect ice as thin as 0.005 inches. Using this technology will enable the

effective delivery of de-icing material to sections of roadway that need it most rather than spreading on the entire roadway.

The state of Vermont has used a strategy that employs an application curve for efficient salting. Application rates vary with temperature. The study "Smart Salting: A Winter Maintenance Strategy" is available from the Vermont Agency of Transportation.

Structural controls are another way to reduce over-application of de-icing materials. Snow fences are used to keep snow from being blown into drifts. Studies show that fences minimize costs associated with snow clearing, reduce the formation of compacted snow, and reduce the need for chemicals. Mechanical snow removal costs approximately 100 times more than trapping snow with fences.

Planting of Native Vegetation in Existing Landscapes

For new development and redevelopment projects the Stormwater Management rules require low maintenance landscaping that encourages the retention and planting of native vegetation, and that minimizes the use of lawns, fertilizers and pesticides. The Department is recommending that as an Optional Measure, Public Complexes incorporate these same concepts into their own existing developed areas and open space. Planting native (or well-adapted) trees and shrubs in a watershed will help restore a healthy stream environment. Plantings help to improve local water quality by preventing erosion, slowing stormwater runoff, and provide food and shelter for wildlife. NJ Watershed Ambassadors can help organize and implement volunteer plantings. Information on the NJ Watershed Ambassadors program may be found at http://www.nj.gov/dep/watershedmgt/ambassadors_index.htm. For more information on landscaping and native species please see Chapter 7 of the New Jersey Stormwater Best Management Practices Manual (http://www.state.nj.us/dep/watershedmgt/bmpmanualfeb2004.htm).

Chapter 12 – Annual Report and Certification, and Blank Forms

This Chapter contains all blank forms required by the permit including:

- Annual Report and Certification form;
- Stormwater Pollution Prevention Plan forms;
- Illicit Connection Inspection Report form (see Chapter 6); and
- Closeout Investigation form (see Chapter 6).

These forms are meant to aid the Public Complex by making the process of complying with your permit, completing the SPPP, conducting inspections, and reporting to the Department easier. Electronic copies of the blank forms are on the CD provided to you by the Department and may also be downloaded at www.state.nj.us/dep/dwq/municstw.html. The forms are available as both a PDF file, which allows the form to be completed on the computer, or as an MS Word fill in form document. If the Public Complex has a full version of Adobe Acrobat, the PDF files can be saved and updated. If you are using an Adobe Acrobat Reader, you will be able to complete the forms, but not save the completed forms for future use.

Each Public Complex should use the blank Stormwater Pollution Prevention Plan forms when completing its SPPP (see Chapter 2 of this guidance document for more information on your SPPP). A Public Complex or consultant may create their own forms. When completing your SPPP, it's important to include detailed information about your Public Complex's stormwater program. The more information your SPPP contains, the more beneficial it will be to you and the Department. The Public Complex Stormwater General Permit does not require Public Complexes to submit the SPPP to the Department, however, the Department will review the completed SPPP as part of regular compliance assistance inspections. In addition, the SPPP should be kept on site for use by members of the Stormwater Pollution Prevention Team and other Public Complex employees it may affect.

The SPPP should be an evolving document and should not be filed away upon completion. The SPPP needs to be continually updated and revised as people, tasks, and best management practices change. Each year you will be required to submit an **Annual Report and Certification**. This is the perfect time to evaluate your stormwater program and SPPP and make appropriate changes, revisions and updates.

Annual Report and Certification

Public Complexes shall complete an Annual Report (on a form provided by the Department below) summarizing the status of compliance with this permit including measurable goals and the status of the implementation of each SBR contained in Part I, Section F of the permit. This report shall include a certification that the Public Complex is in compliance with its stormwater program, SPPP and this permit, except for any incidents of noncompliance. Any incidents of noncompliance with permit conditions shall be identified in the Annual Report and Certification. A copy of each Annual Report and Certification shall be kept at a central location and shall be made available to the Department for inspection.

- If there are incidents of noncompliance, the report shall identify the steps being taken to remedy the noncompliance and to prevent such incidents from recurring.

- The Annual Report and Certification shall be signed and dated by the Public Complex, and shall be maintained for a period of at least five years. This period may be extended by written request of the Department at any time.

The Annual Report and Certification shall be submitted to the Department pursuant to the following submittal schedule:

- Submit an Annual Report and Certification: **on or before July 1, 2005 and every 12 months thereafter**.

Annual Report and Certification Form

Stormwater Pollution Prevention Plan Forms

Illicit Connection Inspection Report Form

Closeout Investigation Form

Chapter 13 – Industrial and Construction Activity Operated by the Public Complex

Provisions within the Intermodal Surface Transportation Efficiency Act (ISTEA) of 1991 temporarily exempted certain discharges from the need to obtain an industrial stormwater discharge permit under the Federal Clean Water Act. The exempted discharges included those associated with Phase I industrial activities at facilities owned or operated by Public Complexes with populations of less than 100,000 (with the exception of powerplants, airports, and uncontrolled sanitary landfills). This "ISTEA" exemption was later extended by U.S. Environmental Protection Agency and Department regulations. The Department's Phase II Rule further extended the deadline to apply for a permit for these previously exempted industrial activities to **March 3, 2004**.

It is important to note that the Public Complex Stormwater General Permit **does not** authorize the discharge of stormwater associated with industrial activity and that **a Public Complex must apply for a separate NJPDES permit if the Public Complex operates those types of facilities.** Types of facilities that a Public Complex may operate and that are considered to be engaging in "industrial activity" include but are not limited to:

- certain landfills and recycling facilities;
- certain transportation facilities (including certain local passenger transit and air transportation facilities);
- certain facilities handling domestic sewage or sewage sludge (including certain Sewage Treatment Plants);
- steam electric power generating facilities; and
- construction activity that disturbs five acres or more

(See N.J.A.C. 7:14A-1.2 for the full definition of "stormwater discharge associated with industrial activity.")

A Public Complex must apply for a separate NJPDES permit if it operates any of these activities regardless of the size of the population of the Public Complex in which they are located.

In addition, the Public Complex Stormwater Permit **does not** authorize "stormwater discharge associated with small construction activity" as defined in N.J.A.C. 7:14A-1.2. In general, this is the discharge to surface water of stormwater from construction activity that disturbs at least one but less than five acres. Any Public Complex that operates a construction site with such a discharge must apply for a separate NJPDES permit for that discharge. In most cases, this permit is the Department's Construction Activity Stormwater General Permit (NJ0088323) obtained through the Soil Conservation District (or through NJDOT for a Public Complex operated by NJDOT). This general permit is also used for construction activity that disturbs five acres or more.

Chapter 14 - Important Names, Addresses and Contacts

Listed below are names, addresses and contacts that may be helpful to the Public Complex when preparing and implementing its stormwater program.

NEW JERSEY DEPARTMENT OF ENVIRONMENTAL PROTECTION CONTACT INFORMATION

Bureau of Nonpoint Pollution Control
Division of Water Quality
PO Box 029
Trenton, New Jersey 08625-0029
Tele: (609) 633-7021
Home of the Municipal Stormwater Regulation Program (MSRP), which implements the Phase II Rules, issues permit authorizations under the MSRP, and provides outreach and compliance assistance. Also issues NJPDES permits for industrial stormwater discharges and discharges to ground water.

Division of Watershed Management
PO Box 418
Trenton, New Jersey 08625-0418
(609) 984-0058

For assistance with the Stormwater Management rules:

- **Bureau of Northern Planning**
  Ken Klipstein, Bureau Chief
  (609) 633-3812
- **Bureau of Southern Planning**
  Steve Jacobus or Bob Mancini
  (609) 984-6888

For assistance with **technical questions** regarding the Stormwater Management rules:

- Sandra Blick, Supervising Environmental Specialist
  Division of Watershed Managementat:
  (609) 633-1441

For assistance with education and outreach:

- **Bureau of Outreach and Education**
  Kerry Kirk Pflugh, Section Chief
  (609) 292-2113

For other sites related to watershed management (e.g., watershed associations) see: http://www.nj.gov/dep/watershedmgt/links.htm

Bureau of Permit Management
Division of Water Quality
PO Box 029
Trenton, New Jersey 08625-0029
(609) 984-4428
Reviews and processes requests for authorization (RFAs) under the Public Complex Stormwater General Permits. RFA, permit fee and billing questions should be submitted to this bureau.

New Jersey Environmental Infrastructure Trust
PO Box 440
Trenton, NJ 08625
(609) 219-8600
Provides low-cost financing for the capital equipment purchase and construction components of environmental infrastructure projects (including stormwater projects) that enhance and protect ground and surface water resources, ensure the safety of drinking water supplies, and make possible responsible and sustainable economic development.

Land Use Regulation, Compliance and Enforcement
PO Box 439
Trenton, New Jersey 08625-0439
(609) 292-0060
Reviews applications for permits to build or develop on environmentally sensitive land such as freshwater wetlands, coastal areas and floodplains.

Solid Waste Regulation
PO Box 414
Trenton, NJ 08625-0414
(609) 984-5950
Responsible for the effective management of solid and hazardous wastes and recyclable materials, such as vegetative waste and street sweeping and catch basin cleaning debris.

Bureau of Point Source Permitting

Issues permits for nonstormwater discharges to surface water including process wastewater, noncontact cooling water, or domestic sewage discharges.

Region 1
Serving northern and western parts of the State, plus Monmouth and Ocean Counties
(609) 633-3869

Region 2
Serving southern and central parts of the State
(609) 292-4860

Regional NJDEP Water Compliance and Enforcement Offices

Conducts compliance evaluation inspections of NJPDES permitted facilities.

Northern (& Metro)
1259 Route 46 East
Parsippany, New Jersey 07054-4191
(973) 299-7592
Fax: (973) 299-7719
(serves Bergen, Essex, Hudson, Hunterdon, Morris, Passaic, Somerset, Sussex & Warren Counties)

Central
Horizon Center
PO Box 407
Robbinsville, New Jersey 08625-0407
(609) 584-4201
Fax: (609) 584-4220
(serves Mercer, Middlesex, Monmouth, Ocean & Union Counties)

Southern
One Port Center
2 Riverside Drive
Camden, New Jersey 08102
(856) 614-3655
Fax: (856) 614-3608
(serves Atlantic, Burlington, Camden, Cape May, Cumberland, Gloucester & Salem Counties)

NJ Geological Survey
29 Arctic Parkway
P.O. Box 427
Trenton, NJ 08625
(609) 292-1185
http://www.state.nj.us/dep/njgs/

The NJ Geological Survey is a public service and research agency within the NJ Department of Environmental Protection. Founded in 1835, the NJGS has evolved from a mineral resources and topographic mapping agency to a modern environmental organization that collects and provides geoscience information to government, consultants, industry, environmental groups, and the public.

CONTACT INFORMATION FOR OTHER GOVERNMENT / PUBLIC AGENCIES

New Jersey Department of Transportation
Administrative Offices
1035 Parkway Avenue
Trenton, NJ 08625
http://www.state.nj.us/transportation/

State Soil Conservation Committee
New Jersey Department of Agriculture
CN330
Trenton, NJ 08625
http://www.state.nj.us/agriculture/rural/natrsrc.htm
(see the last page of this chapter for a list of soil conservation districts and their phone numbers)

U.S. Geological Survey
1-888-ASK-USGS (1-888-275-8747).
http://www.usgs.gov/

U.S. Environmental Protection Agency
Environmental Protection Agency
Ariel Rios Building
1200 Pennsylvania Avenue, N.W.
Washington, DC 20460
(202) 272-0167
http://www.epa.gov/

CONTACT INFORMATION FOR OTHER GROUPS AND ORGANIZATIONS

Watershed Associations
Contact the Department's Division of Watershed Management for contact information for your local Watershed Association (http://www.nj.gov/dep/watershedmgt/links.htm)

New Jersey Association of Counties
150 West State Street
Trenton, NJ 08608
609-394-3467
http://www.njac.org/

New Jersey Council of County Colleges
330 West State Street
Trenton, NJ 08618
Phone: 1-800-334-NJCC
http://www.njccc.org/

New Jersey Association of State Colleges and Universities
150 West State Street
Trenton, NJ 08608
Phone: 609-989-1100
http://www.njascu.org/

Association of New Jersey Environmental Commissions (ANJEC)
PO Box 157
Mendham, NJ 07945
Phone: (973) 539-7547
(609) 278-5088
ANJEC is a statewide non-profit organization that assists the efforts of environmental commissions, local officials, interested citizens, private organizations and government agencies. ANJEC protects natural resources through smart growth and State Plan implementation, preserves open space, protects water resources and cares for the urban environment. ANJEC is active in the Coalition for Affordable Housing and the Environment and the Highlands Coalition. They also work to protect the special resources of the Pinelands and the Delaware Bayshore.

Clean Ocean Action
P.O. Box 505, Highlands, New Jersey 07732-0505
Tele: (732) 872-0111
and
PO Box 1098,
Wildwood, New Jersey 08260
Tele: (609) 729-9262
Clean Ocean Action's south Jersey office is also the home of the new environmental education center, the Institute of Coastal Education. The Wildwood Office organizes activites, programs, and citizen action events for the Cape May & Atlantic Counties area.

Clean Ocean Action's goal is to improve the degraded marine water quality off the New Jersey/New York coast, by identifying and attacking the sources of pollution by using research, public education, and citizen action to convince public officials to enact and enforce measures which will clean up and protect the ocean.

BULLETINS, DOCUMENTS, MANUALS, ETC.

Stormwater Pollution Prevention Plan Electronic Worksheets
Contact the Bureau of Nonpoint Pollution Control, or visit www.njstormwater.org

Information concerning industrial stormwater permitting (for ISTEA or other facilities)
Contact the Bureau of Nonpoint Pollution Control

New Jersey Stormwater Best Management Practices Manual as amended
Contact the Division of Watershed Management, or visit www.njstormwater.org

NJPDES Rules (N.J.A.C. 7:14A) and the New Jersey Register
Official versions are available from:
West Group, Attn: COP
620 Opperman Drive
PO Box 64833
St. Paul, MN 55164-9742
To order call (800) 328-9352
Cost $77 (NJPDES Rules), $169. (New Jersey Register)

Unofficicial version of the NJPDES rules are on the Division of Water Quality website at: www.njstormwater.org.

Code of Federal Regulations and Federal Register
Available from: State, university, law, and some county libraries. Also available at www.gpoaccess.gov

Standards for Soil Erosion and Sediment Control in New Jersey
Available from: State Soil Conservation Committee (SSCC) or your local SCD

NJDOT Soil Erosion and Sediment and Control Standards
http://www.state.nj.us/transportation/

Local Soil Conservation Districts

BERGEN
327 Ridgewood Avenue
Paramus, NJ 07652
201-261-4407
201-261-7573 (fax)
973-538-1552*

BURLINGTON
Tiffany Square, Suite 100
2615 Route 38 - RD 2
Mount Holly, NJ 08060
609-267-7410
609-267-3347 (fax)
609- 267-0811*
mailto:burlsoil@bellatlantic.net

CAMDEN
403 Commerce Lane, Suite 1
W. Berlin, NJ 08091
856-767-6299
856-767-1676 (fax)
856-267-0811*
http://www.camdenscd.org/
ccscd@jersey.net

CAPE-ATLANTIC
Atlantic County Office Building
6260 Old Harding Highway
Mays Landing, NJ 08330
609-625-3144
609-625-7360 (fax)
609-205-1225*
mailto:capeatlantic@erols.com
http://capeatlantic.org/

CUMBERLAND
PO Box 144, Route 77
Deerfield, NJ 08313
856-451-2422
856-451-1358 (fax)
856-205-1225
http://cumberland-soil.deeweb.com
csc123@jnlk.com

FREEHOLD
(Monmouth & Middlesex)
211 Freehold Road
Manalapan, NJ 07726
732-446-2300
732-446-9140 (fax)
732-462-1079*
http://freeholdscd.org/
fscd@webspan.net

GLOUCESTER
301 Hollydell Dr.
Sewell, NJ 08080
856-589-5250
856-256-0488 (fax)
856-769-2790*
http://gloucesterscd.org/
victor-devasto@nj.nacdnet.org

HUDSON, ESSEX & PASSAIC
15 Bloomfield Avenue
North Caldwell 07006
973-364-0786
973-364-0784 (fax)
973-538-1552*
hepscd@bellatlantic.net

HUNTERDON
Community Services Annex
8 Gauntt Place
Flemington, NJ 08822
908-788-1397
908-788-0795 (fax)
908-782-3915*

MERCER
508 Hughes Drive
Hamilton Square, NJ 08690
609-586-9603
609-586-1117 (fax)
732-462-1079*
http://mercerswcd.org
mercersoil@aol.com

MORRIS
Court House, PO Box 900
Morristown 07960
560 W. Hanover Avenue,
Morris Township, NJ
973-285-2953
973-285-8345 (fax)
973-538-1552*
mcscd@ibm.net

OCEAN
714 Lacey Road
Forked River, NJ 08731
609-971-7002
609-971-3391 (fax)
609-267-0811*
www.ocscd.org/
info@ocscd.org

SALEM
PO Box 168
Deerfield, NJ 08313
856-769-1124
856-451-1358 (fax)
856-769-2790*
http://cumberland-soil.deeweb.com

SOMERSET-UNION
Somerset County 4-H Center
308 Milltown Road
Bridgewater, NJ 08807
908-526-2701
908-526-7017 (fax)
908-782-3915*
thurlow@co.somerset.nj.us

SUSSEX
186 Halsey Rd, Suite 2
Newton, NJ 07860
973-579-5074
973-579-7846 (fax)
908-852-5450*

WARREN
224 Stiger Street
Hackettstown, NJ 07840
908-852-2579
908-852-2284 (fax)
908-852-5450*
http://warrencountyscd.org/
wcscd@bellatlantic.net

State Soil Conservation Committee
New Jersey Department of Agriculture
CN 330, Trenton, NJ 08625
609-292-5540
609-633-7229 (fax)
www.state.nj.us/agriculture/rural/natrsrc.htm
james.sadley@ag.state.nj.us