ARCADIS Submittal # CD-020-R1

abscope
environmental, inc.
P.O. Box 487
Canastota, NY 13032

315-697-8437
315-697-9391 Fax

# SUBMITTAL

| | |
|---|---|
| DATE: 7/22/11 | Abscope Job #: 11833 |
| ATTENTION: Mathew Bowman | |
| Submittal #: 13,15,& 22 | |
| RE: sieve & proctor analysis of DGA, 5/8" stone, 2.5" stone, & clean certification | |

TO: Mathew Bowman

Arcadis
251 E. Ohio St., Suite 800
Indianapolis, IN, 46204
P: 317-236-5226 | F: 989-277-4852

WE ARE SENDING YOU ☒ Attached ☐ Under Separate cover via _____ the following items:

☐ Shop drawings ☐ Prints ☐ Plans ☐ Samples ☒ Specifications

☐ Copy of letter ☐ Change order ☐ Other:

| COPIES | DATE | NO. | Section | DESCRIPTION |
|---|---|---|---|---|
| 1 | 7/22/11 | 22 | 33 23 00 | Sieve analysis of DGA Type 5A stone (trench fill) |
| 1 | 7/22/11 | 22 | 33 41 00 | Sieve analysis of 5/8" stone (#67 bedding stone) |
| 1 | 7/22/11 | 22 | 33 23 00 | Sieve analysis 2.5" stone (construction entrance fill) |
| 1 | 7/22/11 | 13 | 31 23 00 | Proctor (moisture/density) for DGA Type 5A stone |
| 1 | 7/22/11 | 13 | 31 23 00 | No Proctor available for 5/8" stone – see letter |
| 1 | 7/22/11 | 13 | 31 23 00 | No Proctor available for 2.5" stone – see letter |
| 1 | 7/22/11 | 15 | 31 23 00 | Clean Certification and source of materials |

☒ For Approval ☐ Approved as Submitted ☐ Resubmit Copies for Approval

☐ For Your Use ☐ Approved as Noted ☐ Submit Copies for Distribution

☐ As Requested ☐ Returned for Corrections ☐ Return Corrected Prints

☐ For Review and Comment ☐ OTHER: _____

☐ FOR BIDS DUE _____ ☐ PRINTS RETURNED AFTER LOAN TO US

REMARKS:

Derek Cole – Project Engineer

SIGNED:

**If enclosures are not as noted, kindly notify us at once**

☒ REVIEWED ☐ REVIEWED & NOTED

REVIEWED SOLELY FOR GENERAL COMPLIANCE WITH CONTRACT DOCUMENTS

ARCADIS

SIGNATURE

7/28/2011 TOLEDO

Date Office Location

☐ RESUBMIT ☐ REJECTED

# WELDON QUARRY CO.
## HOPATCONG, N.J.

**CONTRACTOR:** Abscope Environmental, Inc.
**FAX NUMBER:** 315 697 9391

**ATTN:** Derek Cole

**PROJECT :** Upland Processing Facility, Newark, NJ

**DATE :** 07/19/11 **Sales Representative:** T.Starr

**MATERIAL :** NJDOT DGA/TYPE 5A

## TYPICAL SIEVE ANALYSIS

| SIEVE SIZE | PER CENT PASSING. | 2007 N.J.DOT SPECS. |
|---|---|---|
| 1 1/2" | 100 | 100 |
| 1" | 96 | N/A |
| 3/4" | 66 | 55 - 90 |
| 1/2" | 52 | N/A |
| 3/8" | 45 | N/A |
| # 4 | 42 | 25 - 50 |
| # 8 | 37 | N/A |
| # 10 | 32 | N/A |
| # 16 | 22 | N/A |
| # 30 | 19 | N/A |
| # 40 | 16 | N/A |
| # 50 | 11 | 5 - 20 |
| # 60 | 12 | N/A |
| # 100 | 8.4 | N/A |
| # 200 | 5.8 | 3 - 10 |

THE SIEVE ANALYSIS SHOWN IS TYPICAL OF : NJDOT DGA/TYPE 5A AGGREGATE AS PRODUCED AT THE WELDON QUARRY, HOPATCONG, NJ AND PROPOSED FOR USE ON THE ABOVE PROJECT. THE SIEVE ANALYSIS COMPLIES WITH THE APPROPRIATE NJ.DOT SPECIFICATIONS.

**WELDON QUARRY CO.**
**HOPATCONG, N.J.**

**CONTRACTOR:** Abscope Environmental, Inc.
**FAX NUMBER:** 315 397 9391

**ATTN.** Derek Cole

**PROJECT :** Upland Processing Facility, Newark, NJ

DATE : 07/19/11 Sales Representative: T.Starr

MATERIAL : 5/8" STONE

## TYPICAL SIEVE ANALYSIS

| SIEVE SIZE | PER CENT PASSING. |
|---|---|
| 1" | 100 |
| 3/4" | 100 |
| 1/2" | 53 |
| 3/8" | 16 |
| # 4 | 4 |
| # 8 | 2 |

**THE SIEVE ANALYSIS SHOWN IS TYPICAL OF : 5/8" STONE AGGREGATE AS PRODUCED AT THE WELDON QUARRY, HOPATCONG, NJ AND PROPOSED FOR USE ON THE ABOVE PROJECT.**

**WELDON QUARRY CO.**
**HOPATCONG, N.J.**

**CONTRACTOR:** Abscope Environmental, Inc.
**FAX NUMBER:** dcole@abscope.com

**ATTN:** Derek Cole

**PROJECT :** Upland Processing Facility, Newark, NJ

**DATE :** 07/22/11 **Sales Representative:** T.Starr

**MATERIAL :** **2 1/2" STONE**

## TYPICAL SIEVE ANALYSIS

| SIEVE SIZE | PER CENT PASSING. | NJ.DOT SPECS. |
|---|---|---|
| 3" | 100 | 100 |
| 2 1/2" | 92 | 90 - 100 |
| 2" | 60 | 35 - 70 |
| 1 1/2" | 7 | 0 - 15 |
| 1" | 2 | N/A |
| 3/4" | 1 | 0 - 5 |

**THE SIEVE ANALYSIS SHOWN IS TYPICAL OF : 2 1/2" STONE AGGREGATE AS PRODUCED AT THE WELDON QUARRY, HOPATCONG, NJ AND PROPOSED FOR USE ON THE ABOVE PROJECT. THE SIEVE ANALYSIS COMPLIES WITH THE APPROPRIATE NJ.DOT SPECIFICATIONS.**

# WELDON MATERIALS, INC.

**ENGINEERING DIVISION - TECHNICAL SERVICES**
**141 CENTRAL AVENUE, WESTFIELD, NJ 07090**
**(908) 233-4444 ext. 2288 FAX (908) 233-4215**


**July 14, 2011**

**Contractor: Abscope Environmental, Inc.**
**Fax: 315 697 9391**

**Attn: Dustin**

**Reference: 117 Blanchard, Newark, NJ**

**Material(s): 5/8" Stone, DGABC Type 5A , ¾" Roadstone & 2 ½" Stone**

**To whom it may concern:**

**We certify that the aggregates to be purchased for the project in reference are produced by Weldon Quarry Company, from sources of virgin granite indigenous to the region. These aggregates are free from contamination when stockpiled at our quarry in Hopatcong, New Jersey.**

**Our Quarry is located at:**

**Route 181**
**Hopatcong, NJ**
**Sussex County.**
**Block #: 1, Lot #: 70001**

**Sincerely,**

Terry Starr

Account Manager

ARCADIS Submittal # CD-23-R1

abscope
environmental, inc.
P.O. Box 487
Canastota, NY 13032

315-697-8437
315-697-9391 Fax

# SUBMITTAL

| | |
|---|---|
| DATE: 7/22/11 | Abscope Job #: 11833 |
| ATTENTION: Mathew Bowman | |
| Submittal #: 13,15,& 22 | |
| RE: sieve & proctor analysis of DGA, 5/8" stone, 2.5" stone, & clean certification | |

TO: Mathew Bowman

Arcadis
251 E. Ohio St., Suite 800
Indianapolis, IN, 46204
P: 317-236-5226 | F: 989-277-4852

WE ARE SENDING YOU ☒ Attached ☐ Under Separate cover via _____ the following items:

☐ Shop drawings ☐ Prints ☐ Plans ☐ Samples ☒ Specifications

☐ Copy of letter ☐ Change order ☐ Other:

| COPIES | DATE | NO. | Section | DESCRIPTION |
|---|---|---|---|---|
| 1 | 7/22/11 | 22 | 33 23 00 | Sieve analysis of DGA Type 5A stone (trench fill) |
| 1 | 7/22/11 | 22 | 33 41 00 | Sieve analysis of 5/8" stone (#67 bedding stone) |
| 1 | 7/22/11 | 22 | 33 23 00 | Sieve analysis 2.5" stone (construction entrance fill) |
| 1 | 7/22/11 | 13 | 31 23 00 | Proctor (moisture/density) for DGA Type 5A stone |
| 1 | 7/22/11 | 13 | 31 23 00 | No Proctor available for 5/8" stone – see letter |
| 1 | 7/22/11 | 13 | 31 23 00 | No Proctor available for 2.5" stone – see letter |
| 1 | 7/22/11 | 15 | 31 23 00 | Clean Certification and source of materials |

☒ For Approval ☐ Approved as Submitted ☐ Resubmit Copies for Approval

☐ For Your Use ☐ Approved as Noted ☐ Submit Copies for Distribution

☐ As Requested ☐ Returned for Corrections ☐ Return Corrected Prints

☐ For Review and Comment ☐ OTHER: _____

☐ FOR BIDS DUE _____ ☐ PRINTS RETURNED AFTER LOAN TO US

REMARKS:

Derek Cole – Project Engineer

SIGNED:

**If enclosures are not as noted, kindly notify us at once**

☐ REVIEWED ☐ REVIEWED & NOTED

REVIEWED SOLELY FOR GENERAL COMPLIANCE WITH CONTRACT DOCUMENTS

ARCADIS

SIGNATURE

7/28/2011 TOLEDO

Date Office Location

☒ RESUBMIT ☐ REJECTED

**CD-23-R1**

**RESUBMIT:**

Provide updated proctor from a lab that will perform compaction testing. Proctor provided was an estimated value.

**WELDON MATERIALS, INC.**
**ENGINEERING DIVISION - TECHNICAL SERVICES**
**141 CENTRAL AVENUE, WESTFIELD, NJ 07090**
**(908) 233-4444 ext. 2288. FAX (908) 233-4215**

**July 19, 2011**

**Fax: 315 697 9391**

**Attn: Derek Cole**

**Reference: Upland Processing Facility, Newark, NJ**

**Material: DENSE GRADED AGGREGATE (DGA).**

**Gentlemen:**

**Our most recent tests on our Quarry Processed Aggregate, Base Course, as produced at the Weldon Quarry in Lake Hopatcong, NJ indicate that the typical value for density is 144.6 lbs per cubic foot at optimum moisture content of 7.2 %.**

**This is equivalent to 3904 lbs per cubic yard, or 1.95 Tons per cubic yard.**

**We trust this is the information you require.**

**Sincerely,**

Terry Starr

Terry Starr

Account Manager

# weldon quarry co.

July 19, 2011

Abscope Environmental, Inc.
One Commercial Drive
Canastota, NY 13032

Re: Upland Processing Facility, Newark, NJ

Attn: Derek Cole

Gentlemen:

* Clean stone does not have a proctor number. There are no fines in it and cannot compact.

I have enclosed the proctor # for DGABC and gradation for 5/8 Stone and DGABC from our Lake Hopatcong Quarry.

Sincerely,

Terry Starr

Terry Starr
Account Manager

Corporate Office:
141 Central Avenue • Westfield, NJ 07090-2189
Tel: (908) 233-4444 • Fax (908) 233-9440

Quarry:
181 Rte 181, Lake Hopatcong, NJ 07849
Tel: (973) 663-1800 • Fax: (973) 663-0809

**WELDON QUARRY CO.**

July 22, 2011

Abscope Environmental, Inc.
One Commercial Drive
Canastota, NY 13032

Re: Upland Processing Facility Newark, NJ

Attn: Derek Cole

Gentlemen:

Clean stone does not have a proctor number as there are no fines in it and cannot compact.

Attached is the gradation for 2 ½" stone .

Sincerely,

Terry Starr
Account Manag

ARCADIS SUBMITTAL # CD-023-R2

abscope
environmental, inc.
P.O. Box 487
Canastota, NY 13032

315-697-8437
315-697-9391 Fax

# SUBMITTAL

| | |
|---|---|
| DATE: 8/11/11 | Abscope Job #: 11833 |
| ATTENTION: Erika Denkenberger | |
| Submittal #: 13 | |
| DGA Proctor | |

TO: Erika Denkenberger

Arcadis
6723 Towpath Road, P.O Box 66
Syracuse, NY
P: 315-671-9426| F: 315-445-9161

WE ARE SENDING YOU ☒ Attached ☐ Under Separate cover via _____the following items:

☐ Shop drawings ☐ Prints ☐ Plans ☐ Samples ☒ Specifications

☐ Copy of letter ☐ Change order ☐ Other:

| COPIES | DATE | NO. | Section | DESCRIPTION |
|---|---|---|---|---|
| 1 | 8/11/11 | 13 | 31 23 00 | Proctor analysis for DGA stone |
| | | | | |
| | | | | |
| | | | | |
| | | | | |
| | | | | |
| | | | | |

☒ REVIEWED ☐ REVIEWED & NOTED

REVIEWED SOLELY FOR GENERAL COMPLIANCE WITH CONTRACT DOCUMENTS

ARCADIS

SIGNATURE

8/15/2011 SYR

Date Office Location

☐ RESUBMIT ☐ REJECTED

☒ For Approval

☐ For Your Use

☐ As Requested

☐ For Review and Comm

☐ FOR BIDS DUE _____

REMARKS:

Derek Cole – Project Eng

ARCADIS SUBMITTAL # CD-023-R2

abscope
environmental, inc.
P.O. Box 487
Canastota, NY 13032

315-697-8437
315-697-9391 Fax

# SUBMITTAL

| | |
|---|---|
| DATE: 8/11/11 | Abscope Job #: 11833 |
| ATTENTION: Erika Denkenberger | |
| Submittal #: 13 | |
| DGA Proctor | |

TO: Erika Denkenberger

Arcadis
6723 Towpath Road, P.O Box 66
Syracuse, NY
P: 315-671-9426| F: 315-445-9161

WE ARE SENDING YOU ☒ Attached ☐ Under Separate cover via _____the following items:

☐ Shop drawings ☐ Prints ☐ Plans ☐ Samples ☒ Specifications

☐ Copy of letter ☐ Change order ☐ Other:

| COPIES | DATE | NO. | Section | DESCRIPTION |
|---|---|---|---|---|
| 1 | 8/11/11 | 13 | 31 23 00 | Proctor analysis for DGA stone |
| | | | | |
| | | | | |
| | | | | |
| | | | | |
| | | | | |
| | | | | |

☒ For Approval ☐ Approved as Submitted ☐ Resubmit Copies for Approval

☐ For Your Use ☐ Approved as Noted ☐ Submit Copies for Distribution

☐ As Requested ☐ Returned for Corrections ☐ Return Corrected Prints

☐ For Review and Comment ☐ OTHER: _____

☐ FOR BIDS DUE _____ ☐ PRINTS RETURNED AFTER LOAN TO US

REMARKS:

Derek Cole – Project Engineer SIGNED:

_____

If enclosures are not as noted, kindly notify us at once

**SPECIMEN ID:** NJDOT DGA/Type 5A

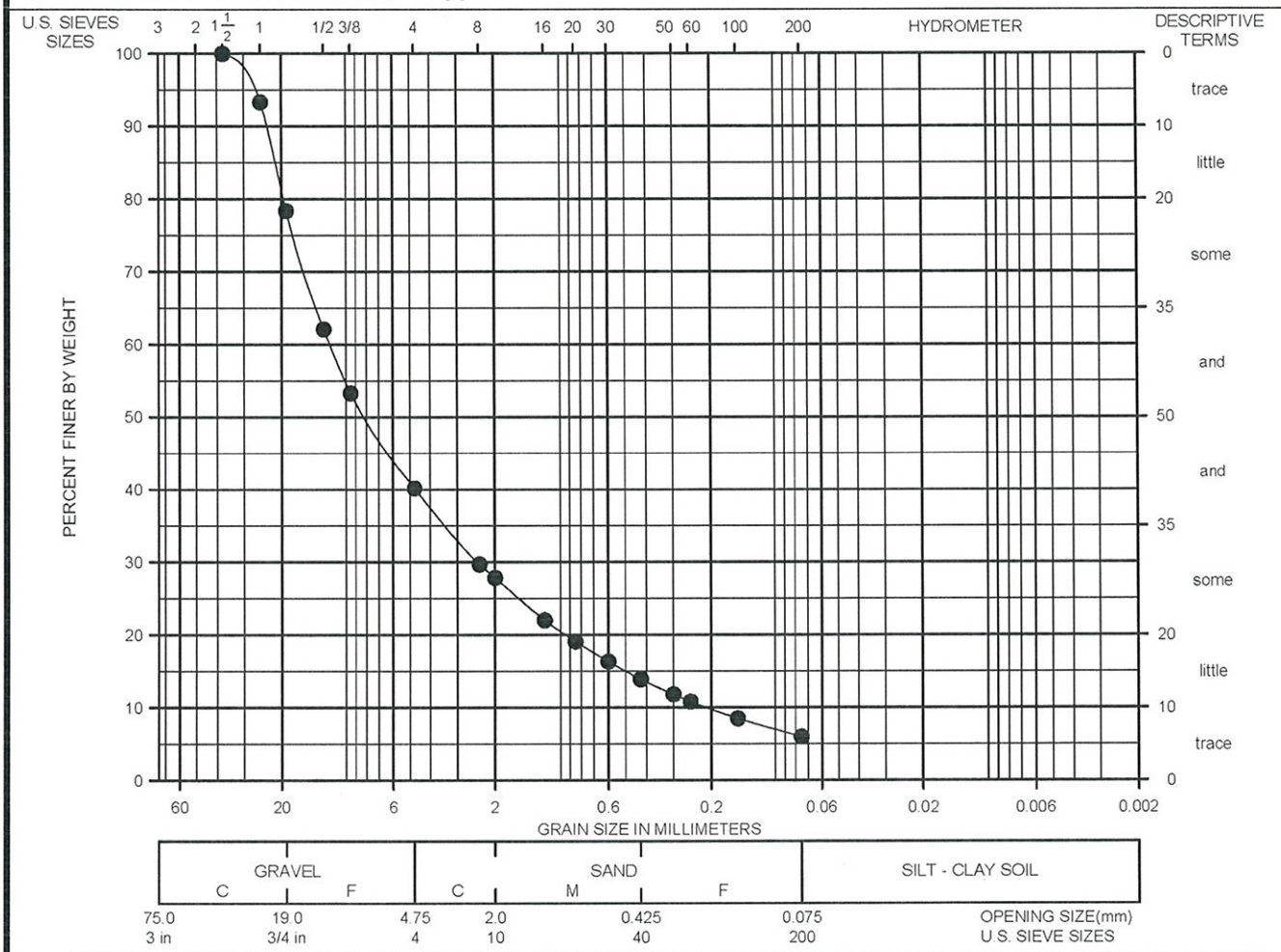


| Cc | Cu | $D_{100}$ | $D_{60}$ | $D_{30}$ | $D_{10}$ | % Gravel | % Sand | % Silt | % Clay |
|---|---|---|---|---|---|---|---|---|---|
| 2.33 | 56.67 | 37.5 | 11.864 | 2.406 | 0.209 | 59.8 | 34.2 | | |

**CLASSIFICATION:** WELL-GRADED GRAVEL with SILT and SAND(GW-GM)

## PARTICLE-SIZE ANALYSIS [ASTM D422]

| Sieve No. / Size | Passing (%) |
|---|---|
| 1-1/2" | 100.0 ✓ |
| 1" | 93.4 |
| 3/4" | 78.4 ✓ 80-55 |
| 1/2" | 62.1 |
| 3/8" | 53.3 |
| #4 | 25-50 40.2 ✓ |
| #8 | 29.7 |
| #10 | 27.9 |
| #16 | 22.0 |
| #20 | 19.1 |
| #30 | 16.3 |
| #40 | 13.9 |
| #50 | 5-20 11.8 ✓ |
| #60 | 10.8 |
| #100 | 8.5 |
| #200 | 3-10 6.0 ✓ |

## PLASTICITY OF SOIL [ASTM D4381]

Liquid Limit: NP
Plastic Limit: NP
Plasticity Index: NP

## MOISTURE CONTENT [ASTM D2216]

## ORGANIC CONTENT [ASTM D2974]

## SPECIFIC GRAVITY [ASTM C127]

Bulk Specific Gravity 2.738

## HYDROMETER ANALYSIS [ASTM D422]


JERSEY ESSAY LABS, INC.
154 Wright Street Newark, NJ 07114
Ph: 973-242-3800 Fax: 973-802-1272
AASHTO Accredited in Soil, Asphalt, Concrete, and Concrete Aggregate testing


Client: Abscope
Project: Upland Processing Facility
Location: 118 Blancard St. Newark, NJ
Date: 8/10/11

LAB NO.: 11S-073

**SPECIMEN ID:** NJDOT DGA/Type 5A

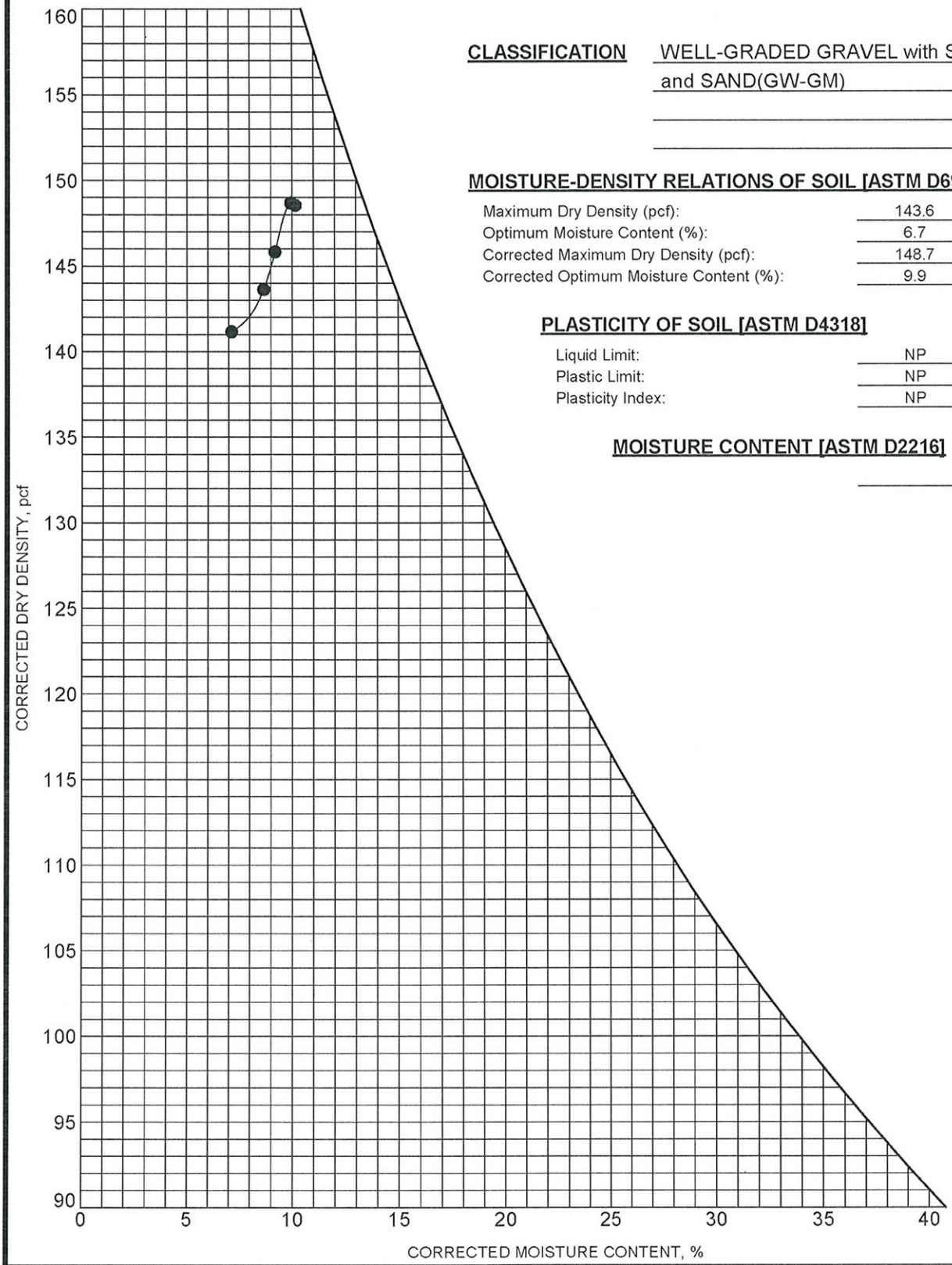


**CLASSIFICATION** WELL-GRADED GRAVEL with SILT and SAND(GW-GM)

**MOISTURE-DENSITY RELATIONS OF SOIL [ASTM D698C]**

| | |
|---|---|
| Maximum Dry Density (pcf): | 143.6 |
| Optimum Moisture Content (%): | 6.7 |
| Corrected Maximum Dry Density (pcf): | 148.7 |
| Corrected Optimum Moisture Content (%): | 9.9 |

**PLASTICITY OF SOIL [ASTM D4318]**

| | |
|---|---|
| Liquid Limit: | NP |
| Plastic Limit: | NP |
| Plasticity Index: | NP |

**MOISTURE CONTENT [ASTM D2216]**


JEL

JERSEY ESSAY LABS, INC.

154 Wright Street Newark, NJ 07114
Ph: 973-242-3800 Fax: 973-802-1272

AASHTO Accredited in Soil, Asphalt, Concrete, and Concrete Aggregate Testing


Client: Abscope
Project: Upland Processing Facility
Location: 118 Blancard St. Newark, NJ
Date: 8/10/11

LAB NO.: 11S-073

ARCADIS SUBMITTAL # CD-031-R1

abscope
environmental, inc.
P.O. Box 487
Canastota, NY 13032

315-697-8437
315-697-9391 Fax

# SUBMITTAL

| | |
|---|---|
| DATE: 8/12/11 | Abscope Job #: 11833 |
| ATTENTION: Erika Denkenberger | |
| Submittal #: 5 & 6 | |
| Cast-In-Place Concrete | |

TO: Erika Denkenberger

Arcadis
6723 Towpath Road, P.O Box 66
Syracuse, NY
P: 315-671-9426| F: 315-445-9161

WE ARE SENDING YOU ☒ Attached ☐ Under Separate cover via _____ the following items:

☐ Shop drawings ☐ Prints ☐ Plans ☐ Samples ☒ Specifications

☐ Copy of letter ☐ Change order ☐ Other:

| COPIES | DATE | NO. | Section | DESCRIPTION |
|---|---|---|---|---|
| 1 | 8/12/11 | 5 | 3 30 00 | Lab Test Reports |
| 1 | 8/12/11 | 6 | 3 30 00 | Material Certificates |
| | | | | |
| | | | | |
| | | | | |
| | | | | |
| | | | | |

☒ For Approval ☐ Approved as Submitted ☐ Resubmit Copies for Approval

☐ For Your Use ☐ Approved as Noted ☐ Submit Copies for Distribution

☐ As Requested ☐ Returned for Corrections ☐ Return Corrected Prints

☐ For Review and Comment ☐ OTHER _____

☐ FOR BIDS DUE _____ ☐ PRINTS RETURNED AFTER LOAN TO US

REVIEWED
REVIEWED & NOTED
REVIEWED SOLELY FOR GENERAL COMPLIANCE WITH CONTRACT DOCUMENTS
ARCADIS
SIGNATURE
Office Location TOLEDO
Date 8/19/2011
RESUBMIT
REJECTED

REMARKS:

Derek Cole – Project Engineer

SIGNED: _____

**If enclosures are not as noted, kindly notify us at once**

# BERTO CONSTRUCTION

625 LEESVILLE AVENUE
RAHWAY, NJ 07065
732-396-0099

8/12/2011

ABSCOPE ENVIRONMENTAL, INC.
ONE COMMERCIAL DRIVE
CANASTOTA, NY 13032

**RE: ARCADIS UPLAND PROCESSING FACILITY - NEWARK**

Below is a list of submittals to be used on above project:

| ITEM | MANUFACTURER | SUPPLIER |
|---|---|---|
| Concrete<br>4500 PSI<br>MIX DESIGN #12018<br>4500 PUMP HRWR<br>MIX DESIGN #A12035 | COLONIAL CONCRETE<br>1196 MCCARTER HIGHWAY<br>NEWARK, NJ 07104 | COLONIAL CONCRETE<br>1196 MCCARTER HIGHWAY<br>NEWARK, NJ 07104 |

BARB BALCHUS
BERTO CONSTRUCTION

COLONIAL
CONCRETE 1196 MCCARTER HIGHWAY - NEWARK, NJ 07104 - 973 482-1920
COMPANY

Client: Berto Construction — Date: 8/2/2011
Project: Arcadis - Newark
Subject: Recommended Concrete Mix Design (Mix #12018) — Report No. 1

The following Mix design is recommended and submitted for your approval for the above referenced project. The mix was designed in accordance with ACI 211.1 and when sampled and tested in accordance with applicable ASTM procedures, will comply with the specifications.

| **Dry Weights per Cubic Yard** | **F'c** | **4500 588#** |
|---|---|---|
| Cement, lbs., Type I / II | | 471 |
| Type C Flyash | | 117 |
| Sand, lbs., SSD | | 1307 |
| Stone, lbs., SSD | | 1750 |
| Water, lbs. | | 249 |
| Water-Cement-Ratio | | 0.42 |
| Mid-Range Water Reducer, oz/100wt. | | 3.0 |
| High-Range Water Reducer, oz/100wt. | | n/a |
| AEA, oz/100 wt. | | 0.75 |
| % Air, +/- 1.0% | | 5.00 |
| Slump, Inches **(Maximum)** | | 4.00 |
| Slump, Inches., after HRWR | | n/a |

## Compressive Strengths Determined by a Independent Laboratory

| | | |
|---|---|---|
| 3 Days | | 3400 |
| | | 3590 |
| | Average | ***3495*** |
| 7 Days | | 4690 |
| | | 4860 |
| | Average | ***4775*** |
| 14 Days | | 5700 |
| | | 5890 |
| | Average | ***5795*** |
| 28 Days | | 6600 |
| | | 6400 |
| | | 6450 |
| | Average | ***6483*** |

STL/CSS

# STL / CSS LLC

INSPECTION & ENGINEERING LABORATORIES

5 Erie Street * Garfield, New Jersey 07026 973.478.6851 * Fax 973.478.7841

*MATERIALS TESTING * RESEARCH * CONSULTING * NONDESTRUCTIVE TESTING * FORENSIC INVESTIGATIONS * FLOOR FLATNESS SURVEY * QUALITY CONTROL*

**Lab No:** R-471-253

**CLIENT:** **COLONIAL CONCRETE COMPANY**
1196 McCarter Highway
Newark, NJ 07104

PLACEMENT TYPE

**PROJECT:** 2010 - 2011 Quality Control Program

MIX DESIGNATION
4500 588#

**SUBJECT:** Trial Concrete Mix Proportions

**CONCRETE SUPPLIER:** Colonial Concrete Company

***The following materials were furnished by the supplier as typical of those proposed for this project***

| | | | |
|---|---|---|---|
| **CEMENT:** | Essex Cement | Type I / II | ASTM C150 |
| **FLYASH:** | Mineral Resources | Type C | ASTM C311 / C618 |
| **FINE AGGREGATE:** | Phoenix Sand | Concrete Sand | ASTM C33 |
| **COARSE AGGREGATE:** | Tilcon Crushed Stone | # 67 Stone | ASTM C33 |
| **ADMIXTURE:** | WR Grace & Company | Daravair | ASTM C260 |
| **ADMIXTURE:** | WR Grace & Company | Daracem 55 | ASTM C494 ' A ' |
| **ADMIXTURE:** | WR Grace & Company | Adva 140 | ASTM C494 ' F ' |

***The aggregates were examined with the following results:***

| PASSING SIEVE SIZE | | F.A SAND | ASTM C-33 SPECIFICATIONS | C.A #67 Stone | ASTM C-33 SPECIFICATIONS |
|---|---|---|---|---|---|
| 1 " | | | | 100 | 100 |
| 3/4 " | | | | 98.1 | 90-100 |
| 3/8 " | | 100 | 100 | 39.7 | 20-55 |
| No. | 4 | 98.9 | 95-100 | 7.2 | 0-10 |
| No. | 8 | 95.8 | 80-100 | 1.2 | 0-5 |
| No. | 16 | 76.5 | 50-85 | | - |
| No. | 30 | 45.2 | 25-60 | | - |
| No. | 50 | 17.4 | 10-30 | | - |
| No. | 100 | 3.6 | 2-10 | | - |
| Fineness Modulus | | 2.62 | 2.3-3.1 | - | - |
| Specific Gravity | | 2.65 | - | 2.67 | - |
| Unit Weight | | 102.9 | PCF | 99.7 | PCF |
| Colometric Test | | Plate No. 1 | - | - | - |

STL/CSS

# STL / CSS LLC

INSPECTION & ENGINEERING LABORATORIES

5 Erie Street * Garfield, New Jersey 07026 973.478.6851 * Fax 973.478.7841

*MATERIALS TESTING * RESEARCH * CONSULTING * NONDESTRUCTIVE TESTING * FORENSIC INVESTIGATIONS * FLOOR FLATNESS SURVEY * QUALITY CONTROL*

| MIX POINT NO. | | 1 | 2 | 3 |
|---|---|---|---|---|
| CEMENT | (lbs.) | 471 | ***471*** | 471 |
| FLYASH | (lbs.) | 117 | ***117*** | 117 |
| FINE AGGREGATE | (lbs.) | 1351 | ***1307*** | 1288 |
| COARSE AGGREGATE | (lbs.) | 1750 | ***1750*** | 1750 |
| TOTAL WATER | (lbs.) | 237 | ***249*** | 261 |
| WATER CEMENT RATIO | lb water / lb cement | 0.40 | ***0.42*** | 0.44 |
| DARACEM 55 (MRWR) | oz/100wt | 3.00 | ***3.00*** | 3.00 |
| DARAVAIR (AIR) | oz/100wt | 0.75 | ***0.75*** | 0.75 |
| ADVA 140 (HRWR) | oz/100wt | n/a | ***n/a*** | n/a |
| AIR CONTENT | +/- 1.0 Percent | 5.00 | ***5.00*** | 5.00 |
| Slump, Inches (Maximum) | | 4.00 | ***4.00*** | 4.00 |
| Slump, Inches., after HRWR | | n/a | ***n/a*** | n/a |
| UNIT WEIGHT | | 146.07 | ***144.89*** | 144.63 |
| W/C RATIO | | 0.40 | ***0.42*** | 0.44 |
| MIX POINT NO. | | 1 | 2 | 3 |
| 7 DAY PSI | | 4854 | ***4690*** | 4533 |
| | | 5030 | ***4860*** | 4700 |
| AVERAGE | | **4942** | ***4775*** | **4617** |
| 28 DAY PSI | | 6864 | ***6600*** | 6329 |
| | | 6669 | ***6400*** | 6106 |
| | | 6721 | ***6450*** | 6153 |
| AVERAGE | | **6751** | ***6483*** | **6196** |
| MIX POINT NO. | | 1 | 2 | 3 |
| CEMENT | cu.ft. | 2.40 | ***2.40*** | 2.40 |
| FLYASH | cu.ft. | 0.75 | ***0.75*** | 0.75 |
| FINE AGGREGATE | cu.ft. | 8.20 | ***8.01*** | 7.82 |
| COARSE AGGREGATE | cu.ft. | 10.50 | ***10.50*** | 10.50 |
| TOTAL WATER | cu.ft. | 3.80 | ***3.99*** | 4.18 |
| ENTRAINED AIR | cu.ft. | 1.35 | ***1.35*** | 1.35 |
| TOTAL VOLUME | cu.ft. | 27.00 | ***27.00*** | 27.00 |

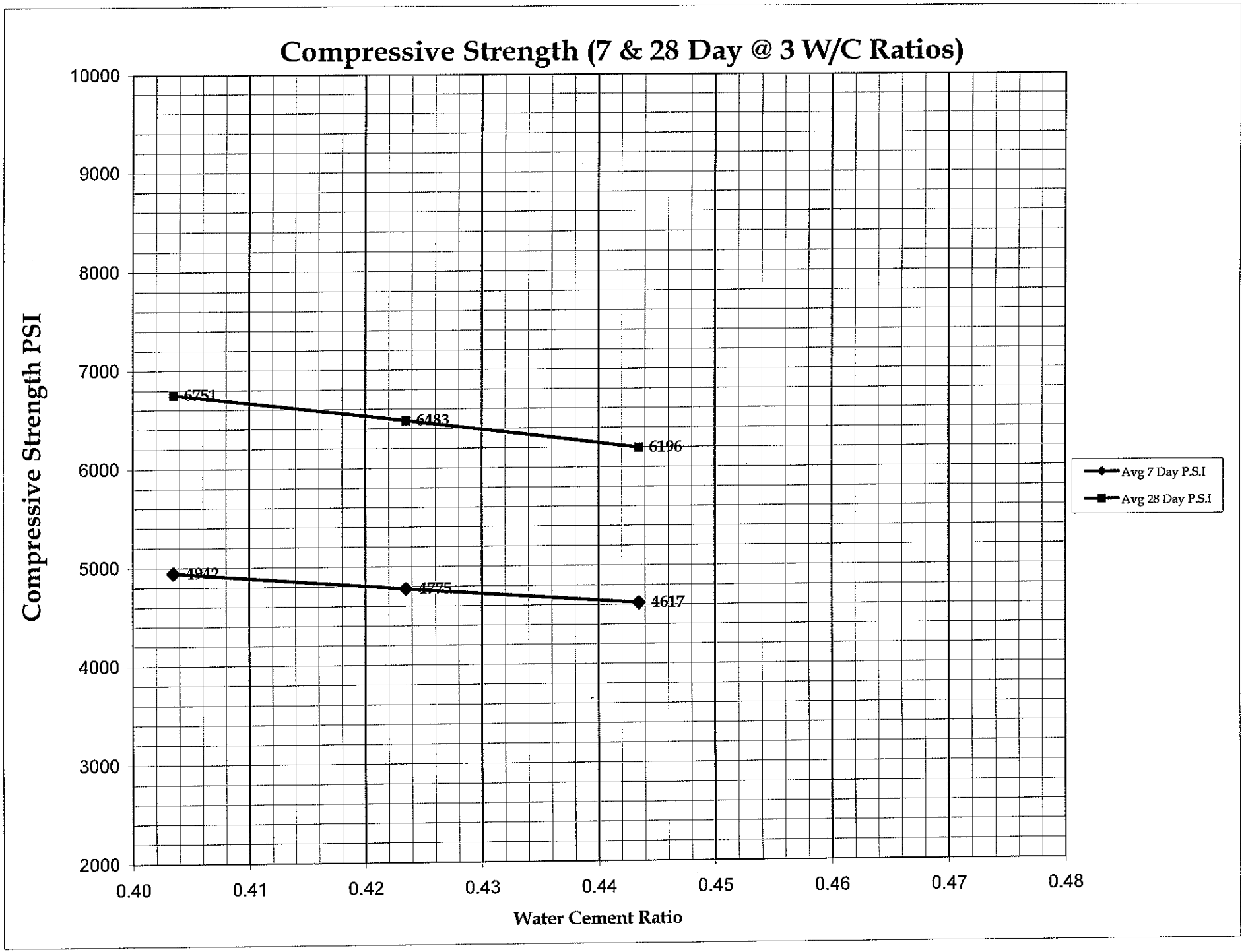
Compressive Strength (7 & 28 Day @ 3 W/C Ratios)
Compressive Strength PSI
10000
9000
8000
7000
6000
5000
4000
3000
2000
0.40
0.41
0.42
0.43
0.44
0.45
0.46
0.47
0.48
Water Cement Ratio
6751
6483
6196
4942
4775
4617
Avg 7 Day P.S.I
Avg 28 Day P.S.I

COLONIAL
CONCRETE 1196 MCCARTER HIGHWAY - NEWARK, NJ 07104 - 973 482-1920
COMPANY

Client: Berto Construction — Date: 8/2/2011
Project: Arcadis - Newark
Subject: Recommended Concrete Mix Design (Mix #A12035) — Report No. 2

The following Mix design is recommended and submitted for your approval for the above referenced project. The mix was designed in accordance with ACI 211.1 and when sampled and tested in accordance with applicable ASTM procedures, will comply with the specifications.

| Dry Weights per Cubic Yard | F'c | 4500 PUMP HRWR |
|---|---|---|
| Cement, lbs., Type I / II | | 441 |
| Type C Flyash | | 147 |
| Sand, lbs., SSD | | 1388 |
| Stone, lbs., SSD | | 1650 |
| Water, lbs. | | 249 |
| Water-Cement-Ratio | | 0.42 |
| Mid-Range Water Reducer, oz/100wt. | | N/A |
| High-Range Water Reducer, oz/100wt. | | 9.0 |
| AEA, oz/100 wt. | | 0.50 |
| % Air, +/- 1.0% | | 5.00 |
| Slump, Inches before MRWR | | N/A |
| Slump, Inches after MRWR | | N/A |
| Slump, Inches., after HRWR | | 8.00 |

## Compressive Strengths Determined by a Independent Laboratory

| | | |
|---|---|---|
| 3 Days | | 4390 |
| | | 4550 |
| | Average | ***4470*** |
| 7 Days | | 5000 |
| | | 5200 |
| | Average | ***5100*** |
| 14 Days | | 5800 |
| | | 5690 |
| | Average | ***5745*** |
| 28 Days | | 6750 |
| | | 6740 |
| | | 6610 |
| | Average | ***6700*** |

STL/CSS

# STL / CSS LLC

INSPECTION & ENGINEERING LABORATORIES

5 Erie Street * Garfield, New Jersey 07026 973.478.6851 * Fax 973.478.7841

*MATERIALS TESTING * RESEARCH * CONSULTING * NONDESTRUCTIVE TESTING * FORENSIC INVESTIGATIONS * FLOOR FLATNESS SURVEY * QUALITY CONTROL*

**Lab No:** R-471-198a

**CLIENT:** **COLONIAL CONCRETE COMPANY**
1196 McCarter Highway
Newark, NJ 07104

PLACEMENT TYPE

**PROJECT:** 2009 - 2010 Quality Control Program

MIX DESIGNATION
4500 PUMP HRWR

**SUBJECT:** Trial Concrete Mix Proportions

**CONCRETE SUPPLIER:** Colonial Concrete Company

***The following materials were furnished by the supplier as typical of those proposed for this project***

| | | | |
|---|---|---|---|
| **CEMENT:** | ESSEX CEMENT | Type I / II | ASTM C150 |
| **FLYASH:** | Mineral Resources | Type C | ASTM C311 / C618 |
| **FINE AGGREGATE:** | Phoenix Sand | Concrete Sand | ASTM C33 |
| **COARSE AGGREGATE:** | Tilcon Crushed Stone | # 67 Stone | ASTM C33 |
| **ADMIXTURE:** | WR Grace & Company | Daravair | ASTM C260 |
| **ADMIXTURE:** | WR Grace & Company | Daracem 55 | ASTM C494 ' A ' |
| **ADMIXTURE:** | WR Grace & Company | Adva 140 | ASTM C494 ' F ' |

***The aggregates were examined with the following results:***

| PASSING SIEVE SIZE | | F.A SAND | ASTM C-33 SPECIFICATIONS | C.A #67 Stone | ASTM C-33 SPECIFICATIONS |
|---|---|---|---|---|---|
| 1 " | | | | 100 | 100 |
| 3/4 " | | | | 98.1 | 90-100 |
| 3/8 " | | 100 | 100 | 39.7 | 20-55 |
| No. | 4 | 98.9 | 95-100 | 7.2 | 0-10 |
| No. | 8 | 95.8 | 80-100 | 1.2 | 0-5 |
| No. | 16 | 76.5 | 50-85 | | - |
| No. | 30 | 45.2 | 25-60 | | - |
| No. | 50 | 17.4 | 10-30 | | - |
| No. | 100 | 3.6 | 2-10 | | - |
| Fineness Modulus | | 2.62 | 2.3-3.1 | - | - |
| Specific Gravity | | 2.65 | - | 2.67 | - |
| Unit Weight | | 102.9 | PCF | 99.7 | PCF |
| Colometric Test | | Plate No. 1 | - | - | - |

STL/CSS

# STL / CSS LLC

INSPECTION & ENGINEERING LABORATORIES

5 Erie Street * Garfield, New Jersey 07026 973.478.6851 * Fax 973.478.7841

*MATERIALS TESTING * RESEARCH * CONSULTING * NONDESTRUCTIVE TESTING * FORENSIC INVESTIGATIONS * FLOOR FLATNESS SURVEY * QUALITY CONTROL*

| MIX POINT NO. | | 1 | 2 | 3 |
|---|---|---|---|---|
| CEMENT | (lbs.) | 441 | ***441*** | 441 |
| FLYASH | (lbs.) | 147 | ***147*** | 147 |
| FINE AGGREGATE | (lbs.) | 1443 | ***1388*** | 1381 |
| COARSE AGGREGATE | (lbs.) | 1650 | ***1650*** | 1650 |
| TOTAL WATER | (lbs.) | 237 | ***249*** | 261 |
| WATER CEMENT RATIO | lb water / lb cement | 0.40 | ***0.42*** | 0.44 |
| DARACEM 55 (MRWR) | oz/100wt | N/A | ***N/A*** | N/A |
| DARAVAIR (AIR) | oz/100wt | 0.50 | ***0.50*** | 0.50 |
| ADVA 140 (HRWR) | oz/100wt | 9 | ***9*** | 9 |
| AIR CONTENT | +/- 1.0 Percent | 5.00 | ***5.00*** | 5.00 |
| Slump, Inches before MRWR | | N/A | ***N/A*** | N/A |
| Slump, Inches after MRWR | | N/A | ***N/A*** | N/A |
| Slump, Inches., after HRWR | | 8.00 | ***8.00*** | 8.00 |
| UNIT WEIGHT | | 145.79 | ***144.18*** | 144.35 |
| W/C RATIO | | 0.40 | ***0.42*** | 0.44 |
| MIX POINT NO. | | 1 | ***2*** | 3 |
| 7 DAY PSI | | 5175 | ***5000*** | 4833 |
| | | 5382 | ***5200*** | 5029 |
| AVERAGE | | **5279** | ***5100*** | **4931** |
| 28 DAY PSI | | 7020 | ***6750*** | 6473 |
| | | 7023 | ***6740*** | 6430 |
| | | 6888 | ***6610*** | 6306 |
| AVERAGE | | **6977** | ***6700*** | **6403** |
| MIX POINT NO. | | 1 | ***2*** | 3 |
| CEMENT | cu.ft. | 2.24 | ***2.24*** | 2.24 |
| FLYASH | cu.ft. | 0.94 | ***0.94*** | 0.94 |
| FINE AGGREGATE | cu.ft. | 8.76 | ***8.57*** | 8.38 |
| COARSE AGGREGATE | cu.ft. | 9.90 | ***9.90*** | 9.90 |
| TOTAL WATER | cu.ft. | 3.80 | ***3.99*** | 4.18 |
| ENTRAINED AIR | cu.ft. | 1.35 | ***1.35*** | 1.35 |
| TOTAL VOLUME | cu.ft. | 27.00 | ***27.00*** | 27.00 |

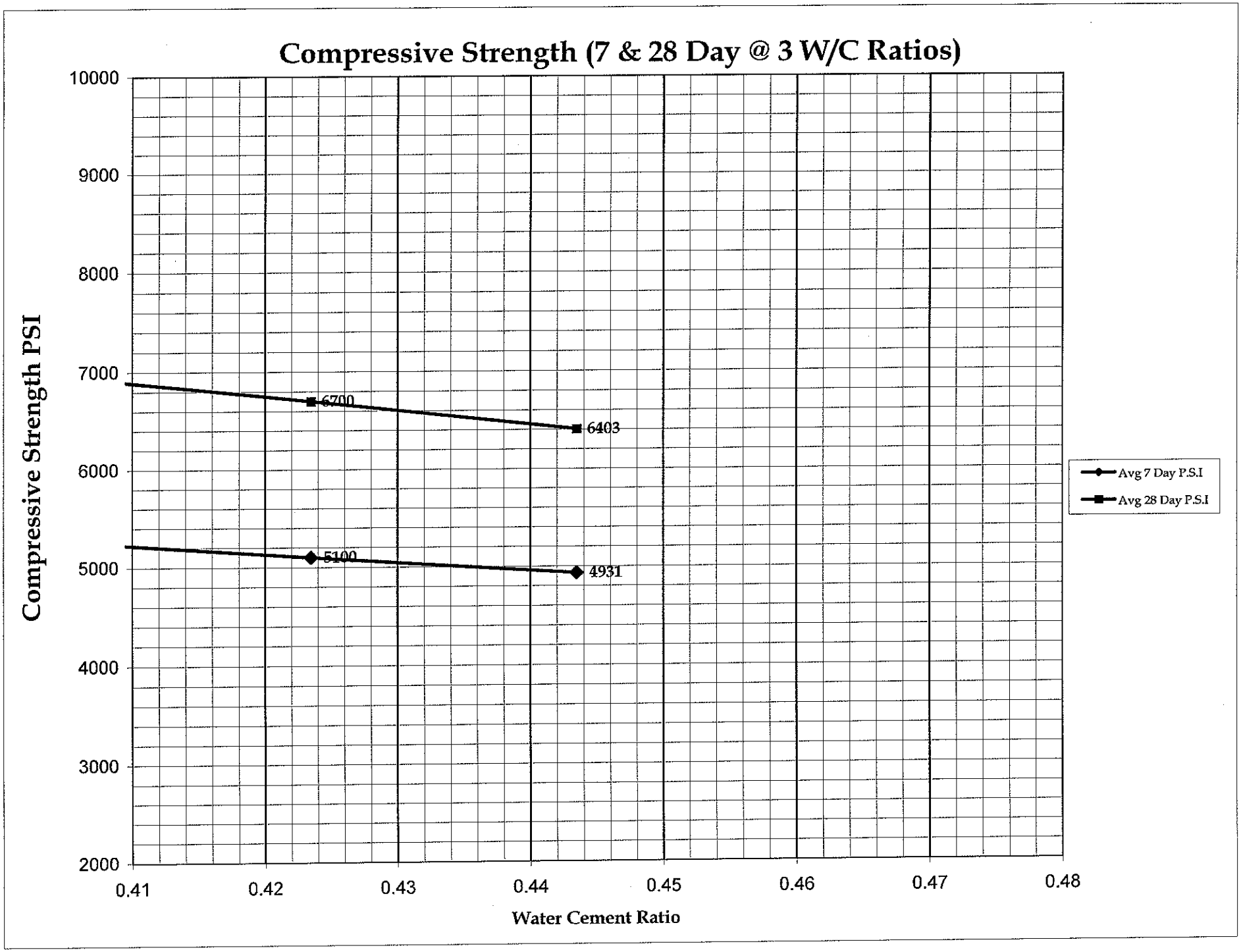
Compressive Strength (7 & 28 Day @ 3 W/C Ratios)
Compressive Strength PSI
10000
9000
8000
7000
6000
5000
4000
3000
2000
0.41
0.42
0.43
0.44
0.45
0.46
0.47
0.48
Water Cement Ratio
6700
6403
5100
4931
Avg 7 Day P.S.I
Avg 28 Day P.S.I

ARCADIS SUBMITTAL # CD-032-R1

abscope
environmental, inc.
P.O. Box 487
Canastota, NY 13032

315-697-8437
315-697-9391 Fax

# SUBMITTAL

| | |
|---|---|
| DATE: 8/12/11 | Abscope Job #: 11833 |
| ATTENTION: Erika Denkenberger | |
| Submittal #: 23A | |
| Stormwater Pumping Stations | |

TO: Erika Denkenberger

Arcadis
6723 Towpath Road, P.O Box 66
Syracuse, NY
P: 315-671-9426| F: 315-445-9161

WE ARE SENDING YOU ☒ Attached ☐ Under Separate cover via _____the following items:

☐ Shop drawings ☐ Prints ☐ Plans ☐ Samples ☒ Specifications

☐ Copy of letter ☐ Change order ☐ Other:

| COPIES | DATE | NO. | Section | DESCRIPTION |
|---|---|---|---|---|
| 1 | 8/12/11 | 23A | 33 44 18 | Pumps and Control Panel |
| | | | | |
| | | | | |
| | | | | |
| | | | | |
| | | | | |
| | | | | |

☐ REVIEWED ☐ REVIEWED & NOTED

REVIEWED SOLELY FOR GENERAL COMPLIANCE WITH CONTRACT DOCUMENTS

ARCADIS

SIGNATURE

8/19/2011 SYR

Date Office Location

☒ RESUBMIT ☐ REJECTED

☒ For Approval

☐ For Your Use

☐ As Requested

☐ For Review and Cor

☐ FOR BIDS DUE ___

REMARKS:

Derek Cole – Project I

PSS Pump Service and Supply of Troy, Inc.

1 Regatta Place ■ Troy, N.Y. 12180 ■ (518) 272-0388 ■ Fax (518) 272-0389

# SUBMITTAL

**Upland Processing Facility**
**Site Improvement Pump Station**
**Lower Passaic River**
**Newark, NJ**
**August 1, 2011**

**Contractor: Abscope Environmental, Inc.**
**Engineer: Malcolm Pirnie, the Water Division of ARCADIS**

# TABLE OF CONTENTS


I. Equipment Specifications and Listing

II. Technical Specifications

III. Performance Curves

IV. Technical and Electrical Data

V. Pump Dimensions

VI. Installation, Operation and Maintenance Manual

VII. Warranty

VIII. Accessories

IX. Transducers & Float Switches

X. Pump Control Panel

# EQUIPMENT SPECIFICATIONS & LISTING

**Date: August 1, 2011**
**Job Name: Upland Processing Facility Site Improvement Pump Station**
**Contractor: Abscope Environmental, Inc.**
**Engineer: Malcolm Pirnie, the Water Division of ARCADIS**

## Mechanical Data

**Pump Manufacturer: HOMA Pump Technology, Inc.**
**Model: AK636-320/21.5PU FM**
**Qty: 3**
**Impeller: 300mm Trim**
**Solid Size Diameter (inches) 3"**
**Pump Weight: 650lbs.**
**Discharge Size Diameter (inches): 6"**
**Power Cable: 1 Qty 30' Feet Length**
**Sensor Cable: 1 Qty 30' Feet Length**

## Motor Data

**BHP: 18.4**
**RPM: 1160**
**Voltage: 460**
**Phase: 3**
**Hz: 60**
**Insulation Class: F**
**Service Factor: 1.25**
**Motor Filling Medium: Air**
**Thermal Overload: yes**
**Moisture Probe: yes**
Motor Cooling Jacket: Yes

## Hydraulic Data

**Actual Flow: Determined System Head**
**Design Flow: 1,700GPM@25'TDH**
**Shut Off Head: 65 Feet**
**Test Requirements: Manuf. Standard Performance Test**

# Technical Specifications

## A Series Non-Clog Submersible Pump
## Installation: Wetwell with AutoCoupling

- SCOPE

  These specifications cover the description, performance, and installation of the electric submersible pump(s) to be procured for customer's project. The pump(s) described here are intended for use in a "wet well only" pumping station and will include a self-engaging Autocoupling Assembly. The pump assembly including Impeller, Volute, Motor and Autocoupling, shall be in full compliance with these specifications.

- GENERAL CONDITIONS 21.5 PUFM TRIM

  Furnish and install 3 Homa Model AK636 320 Electric Submersible Wastewater Pump(s), each consisting of a single stage, non-clog centrifugal pump, close-coupled to a squirrel cage induction type electric motor assembled in a single-body, watertight aggregate, capable of maintaining its watertight integrity submerged under 80 feet of water, complete with Autocoupling Base and Adapter Flange, for automatic operation in a Wet Well. The Autocoupling discharge flange shall be ANSI Class l25 size ___ inch Cast Iron.

- PERFORMANCE GUARANTEE

  The pump shall be designed to handle raw, unscreened sewage, storm water, sludge or similar contaminated liquid at a operating point of 1700 GPM at 75 FT TDH with a Hydraulic Efficiency of at least 67 %. Shut-off head shall be 84 FT minimum. As this pump will be utilized for solids handling, it must be capable of repeatably passing spherical solids up to 3 inch in diameter.

- MATERIALS OF CONSTRUCTION

  Major castings: ASTM A48 Class 40B Cast Iron. - Wear Ring: ASTM Bl44 Bronze. - Shaft: AISI 430F Stainless Steel. - Fasteners: AISI 304 Stainless Steel. - O-Rings: Nitrile Rubber. - Shaft Seals: Silicon Carbide/Silicon Carbide (impeller and motor side). Cable Jacket: Neoprene. - Cable Entry: elastomer grommet, stainless steel washers.- Protective Coating: High Solids Epoxy

- IMPELLER

  Impeller will be cast as one piece and shall be one of the following designs:
  ( ) single-vane closed (double-shrouded), radial non- clog ("AM" & "AMX" Models)
  (✓) two-vane closed (double-shrouded), radial non-clog ("AK" Models)
  ( ) multi-vane open (single-shrouded), torque-flow (vortex, 4" and 6" "AV" models)
  statically and dynamically balanced, to assure that vibration amplitudes, measured at the level of the upper bearing while operating in a vertical position, remain within the limits specified by the Hydraulic Institute Standards.

- VOLUTE

  Volute will be cast in one piece, with smooth internal contours and surfaces, providing obstruction-free passageways with low friction losses. A stationary Wear Ring, made of bronze, shall maintain close tolerances between the rotating Impeller and the stationary Volute.

- SHAFT

  Pump shaft must have generous shoulder fillet radii to minimize stress concentration and fatigue. Deflection at the Shaft Seal within the operating range shall not be more than 0.002 inch.

- BEARINGS

  Pump shaft shall be supported by anti-friction bearings, designed for minimum 50,000 hours B-l0 Life at the pumps Best Efficiency Point ,and shall be factory pre-lubricated. The lower impeller-side bearing will be a double-row, deep groove ball bearing, axially retained, to sustain both axial and radial loads. The upper motor-end bearing is a single-row, deep groove ball bearing axially floating, to sustain radial loads only.

# Technical Specifications

- ## WATERTIGHT INTEGRITY

The watertight integrity of the single-body pump-motor assembly shall be assured.

Each Cable Entry Assembly shall contain an elastomer grommet, flanked by two washers, closely fitted to the cable O.D. A watertight seal shall be maintained by screwing a threaded cable entry gland into a cable inlet flange which bolts into the motor cap. The cable entry gland threads down to a positive stop, thereby tightly compressing the grommet around the cable. The gland will provide a strain-relieving , anti-kink feature, functioning independently from the separate sealing action. The cable inlet flange shall contain an oring groove on the bottom side of the flange to allow for watertight integrity of the bolt-on cable entry assembly when bolted into the entry holes in the motor cap. For pumps above 10 horsepower an isolated Junction Box containing the Terminal Board, and sealed from the Motor Compartment by a watertight isolation plate, will provide a secondary barrier against water or moisture penetration. Each pump shall be supplied with 30 feet of SO Type power cable.

- ## SEALS

Motor Compartment shall be isolated from the Liquid End by Single Mechanical Shaft Seals in tandem arrangement (dual-independent, both oriented to resist pressure from the impeller). The upper motor side seal shall run in an Oil Chamber, which separates the Motor Compartment from the Liquid End and provides permanent lubrication and cooling. The lower impeller side seal will also get lubrication from the Oil Chamber. Each seal will have a stationary portion and a positively driven rotary portion. Springs must be protected from the pumped liquid; and under no circumstances can solid particles accumulate on the external spring and hamper its effectiveness. Seals must not require repeated checking or re-adjustment, except periodic inspection of the oil chamber. At the interfaces of major castings, sealing shall by accomplished by resilient Buna-N O-Rings, confined within closely fitted, high surface quality rabbet joints, compressed only to the prescribed dimension by metal-to-metal contact, allowing radial movement and preventing permanent set. Flat gaskets and seal rings, which may be squeezed unevenly or beyond the permanent deformation limit, are not allowed.

- ## SEAL PROBE

A conductive seal probe shall be provided with pump. Probe shall be mounted into mechanical seal chamber and when interlocked with control panel, probe shall indicate the presence of contaminants within mechanical seal chamber. Option for external seal probe devices shall be readily available and field retrofittable for all pumps.

- ## ELECTRIC MOTOR

Each pump shall be driven by a Submersible Squirrel Cage Induction Motor in accordance with NEMA MG I Section IV Part 30, rated at 18.4 HP 1160 RPM 460 Volts 3 Phase. Motor shall be NEMA Design B for continuous duty, capable of sustaining 15 starts per hour. The pump and motor shall be produced by one manufacturer and shall be of the air-filled, watertight design.

All stator windings and leads shall be insulated with moisture-resistant Class F Insulation, capable of withstanding 155°C Max. temperature, dipped and baked three times. Upon assembly the stator shall be heat-shrink-fitted into the stator housing; the use of bolts, pins or other fastening devices, which would require penetration of the stator housing, shall not be acceptable.

In each phase winding there shall be embedded a bi-metallic temperature sensor, wired in series and interlocked with the motor overload protection in the Control Panel. Any of these thermal sensors shall cut out electric power if the temperature in its winding exceeds 140°C, but shall automatically reset when the winding temperature returns to normal. The motor shall be non-overloading through the selected performance curve and have a Service Factor of 1.15.

When the application requires, motor shall be approved for use in Hazardous (Classified) areas. Pumps shall be suitable for operation in Class 1, Division 1, Groups C & D Areas and shall be approved by Factory Mutual (FM) for use in the area classification indicated.

- ## INSTALLATION MODE

An Autocoupling assembly shall be employed to eliminate the need for entering the wet well to service pumps. The system shall allow the lowering of the pump unit(s) into the well along rigid guide pipes, resulting in a self-engaging, firm, leak proof coupling of the volute outlet to a receiving Base anchored to the floor which forms the discharge pipe connection. To assure a leak proof junction between movable and stationary components, a resilient seal ring shall be employed which is easily replaceable as part of the pump assembly, is axially and evenly compressed upon contact. Metal-to-metal contact faces shall not be allowed. Once seated, the pump shall be entirely supported by the Autocoupling Base, without any reliance on additional supports.

# Technical Information

AK636-320/20PUFM

**Operating data**

| | |
|---|---|
| Flow | 1700 US g.p.m. |
| Head | 25 ft |
| Pump efficiency | 59 % |
| Required power | 18.4 hp |
| NPSH | |
| Fluid | Water, clean |
| Temperature | 68 °F |
| Pumpe type | Single pump |
| No. of pumps | 1 |

**Pump data**

| | |
|---|---|
| Type | AK636-320/20 PUFM |
| Manufacturer | HOMA |
| Series | AK |
| Impeller | Multi channel impeller |
| Impeller size | 12⅝" |
| Solid size | 3 inch |
| Discharge port | 6" ANSI |

**Motor data**

| | |
|---|---|
| Rated voltage | 230 / 460 V |
| Frequency | 60 Hz |
| Power output (P2) | 20.0 |
| Rated speed | 1160 rpm |
| Number of poles | 6 |
| Efficiency | 86 % |
| Rated current | 60 / 30 A |
| Degree of protection | IP 68 |

**Materials**

| | |
|---|---|
| Motor housing | Cast Iron ASTM A48;Cl.40B |
| Impeller | Cast Iron ASTM A48;Cl.40B |
| Pump housing | Cast Iron ASTM A48;Cl.40B |
| Wear ring | Bronze ASTM B144 |
| Motor shaft | AISI 430 F Stainless Steel |
| Bolts | AISI 304 Stainless Steel |
| Motor jacket | Stainless steel |
| Elastomeres | Nitrile Rubber |

| | |
|---|---|
| Mechanical seal on motor side | SiC / SiC |
| Mechanical seal on medium side | SiC / SiC |
| Lower Bearing | Two angular ball bearings |
| Upper Bearing | Deep Groove Ball Bearing |

Testnorm
**ISO 9906**

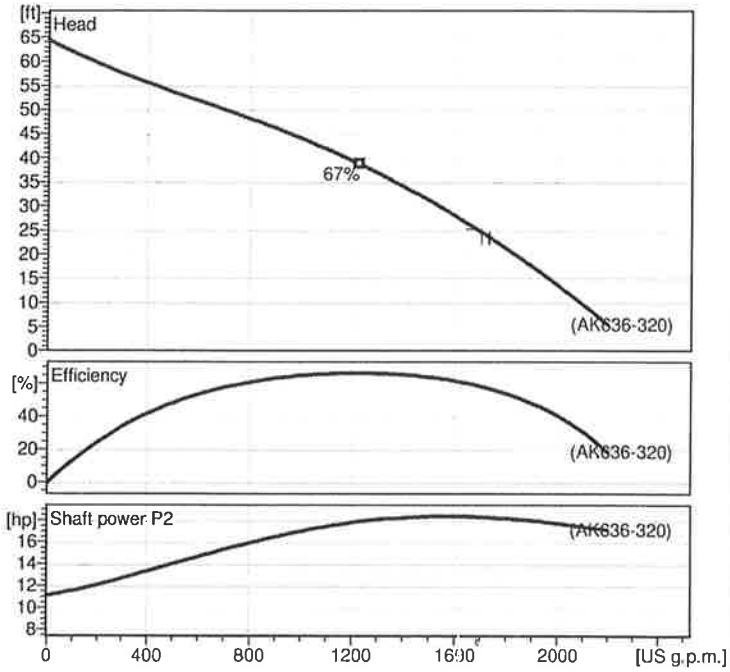


Wet well installation with auto coupling kit (PU-motor, 320, FM, 6")
Dimensions in inch, letters see table

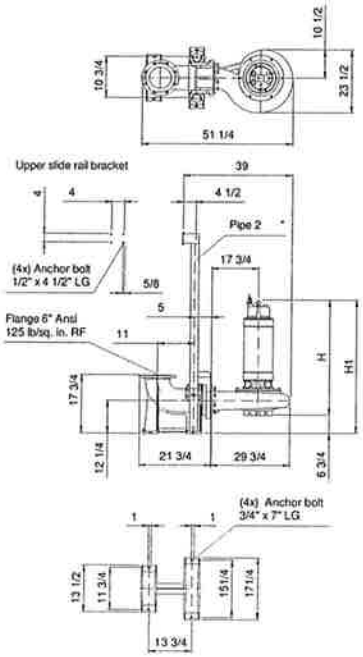


**Table Dimensions**
( inch)

| | |
|---|---|
| H | 42¾ |
| H1 | 48¼ |

2.0 - 11.01.2008 (Build 137) Homa Pump Technology Inc. (internal)

| Project | Project no.: | Created by: | Page: | Date: |
|---|---|---|---|---|
| **Pump Service Troy** | **Arcadis- Newark, NJ rev2** | **R Sura** | **1** | **2011-07-22** |

HOMA PUMPEN MIT SYSTEM

# Performance Curve

AK636-320/20PUFM

| Impeller | | | | | |
|---|---|---|---|---|---|
| Impeller type: Multi channel impeller | Solid size Ø: 3 inch | Max. Ø: 14 1/4 | Min. Ø: 12 5/8" | Sel. Ø: 12 5/8" | |

| Operating data | | | | |
|---|---|---|---|---|
| Speed: 1160 | Frequency: 60 Hz | Duty point: Q = 1700 US g.p.m. H = 25 ft | Suction port: | Discharge port: 6" ANSI |
| Power data referred to: | | Water [100%] ; 68 °F; 62.322lb/ft³; 1.0818E-5ft²/s | Testnorm: | ISO 9906 |

Curve number:

The performance curve included in the July 14th proposal has the same operating points and impeller diameter, but the indicated speed and frequency are different. Confirm which is correct.

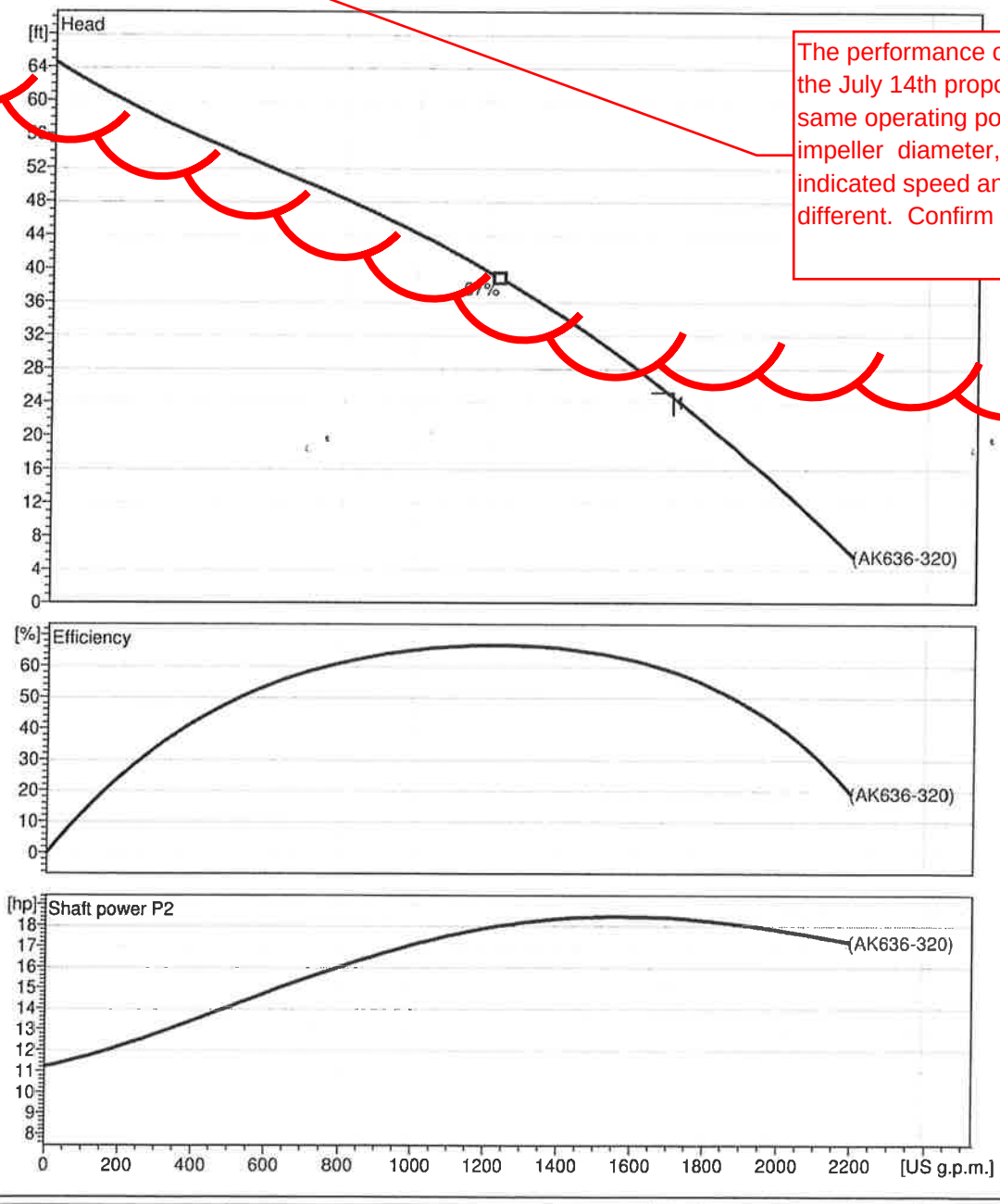


2.0 - 11.01.2008 (Build 137) Homa Pump Technology Inc. (internal)

| Project | Project no.: | Created by: | Page: | Date: |
|---|---|---|---|---|
| Pump Service Troy | Arcadis- Newark, NJ rev2 | R Sura | 2 | 2011-07-22 |

# Technical Data

AK636-320/20 P/C FM
AK636-320/20 P/C
AK636-320/20 PU

AK636-320/20 PUFM

## Operating data

| | | | | | | |
|---|---|---|---|---|---|---|
| **Fluid** | Water, clean | | **Flow** | | 1700 | US g.p.m. |
| **Temperature** | 68 | °F | **Static head** | **H geo** | 0 | ft |
| **Density** | 62.32 | lb/ft³ | **Manometric head** | **H man** | 25 | ft |
| **Kin. viscosity** | 1.082E-5 | ft²/s | **Pump efficiency** | | 59.0 | % |

## Pump

| | | | | | | |
|---|---|---|---|---|---|---|
| **Pump Code** | AK636-320/20 PUFM | | **Speed** | | 1160 | rpm |
| **Suction port** | | | **Head** | **Max.** | 64.7 | ft |
| **Discharge port** | 6" ANSI | | | **Min.** | 5.6 | ft |
| **Impeller type** | Multi channel impeller | | **Flow** | **Max.** | 2203.3 | US g.p.m. |
| **Solid size** | 3 | inch | **Pump efficiency max.** | | 67 | % |
| **Impeller Ø** | 12.6 | inch | **Required rated power max.** | | 18.5 | hp |

## Motor

| | | | | | | |
|---|---|---|---|---|---|---|
| **Motor design** | Submersible motor | | **Insulation class** | | F | |
| **Motor name** | AM204.25P/6/3 | | **Degree of protection** | | IP 68 | |
| **Frequency** | 60 | Hz | **Temperature class** | | T3C | |
| **Power input (P1)** | 24.9 | hp | **Ex** | | D | |
| **Power output (P2)** | 20.0 | hp | **Explosion protection** | | | |
| **Rated speed** | 1160 | rpm | **Efficiency at % rated power** | **100%** | 86 | % |
| **Rated voltage** | 230 / 460 V | 3~ | | **75%** | 87 | % |
| **Rated current** | 60.0 / 30 | A | | **50%** | 86 | % |
| **Starting current, direct starting** | 222.0 / 111 | A | **cos phi at % rated power** | **100%** | 0.78 | |
| **Starting current, star-delta** | 74.0 | A | | **75%** | 0,73 | |
| **Service factor** | 1.15 | | | **50%** | 0,62 | |

| | | |
|---|---|---|
| **Shaft seal** | Mechanical seal on motor side | SiC / SiC |
| | Mechanical seal on medium side | SiC / SiC |
| **Bearing** | Lower Bearing | Two angular ball bearings |
| | Upper Bearing | Deep Groove Ball Bearing |
| **Remarks** | | |

## Cable data — Starting mode: direct — /Weight

| | | | | | | | |
|---|---|---|---|---|---|---|---|
| **Motorversion** | | P 20 /C FM | P 20 /C | PU 20 | PU 20 FM | | |
| **Power cable** | | 4X10 | 4G10 | 4G10 | 4X10 | | |
| **Type of power cable** | | NSSHÖU-J | H07RN-F PLUS | H07RN-F PLUS | NSSHÖU-J | | |
| **Control cable** | | 4+4X1,5 | 5G1,5 | 5G1,5 | 2x4X1,5 | | |
| **Type of control cable** | | NSSHÖU-J | H07RN-F | H07RN-F | NSSHÖU-J | | |
| **Cable length** | ft | 32.8 | | | | | |
| **Weight aggregat** | lb | On demand | On demand | On demand | On demand | | |

## Materials

| | | | |
|---|---|---|---|
| **Motor housing** | Cast Iron ASTM A48;Cl.40B | **Bolts** | AISI 304 Stainless Steel |
| **Pump housing** | Cast Iron ASTM A48;Cl.40B | **Elastomeres** | Nitrile Rubber |
| **Impeller** | Cast Iron ASTM A48;Cl.40B | **Motor jacket** | Stainless steel |
| **Wear ring** | Bronze ASTM B144 | | |
| **Motor shaft** | AISI 430 F Stainless Steel | | |

# Accessory Data

## Seal Probe

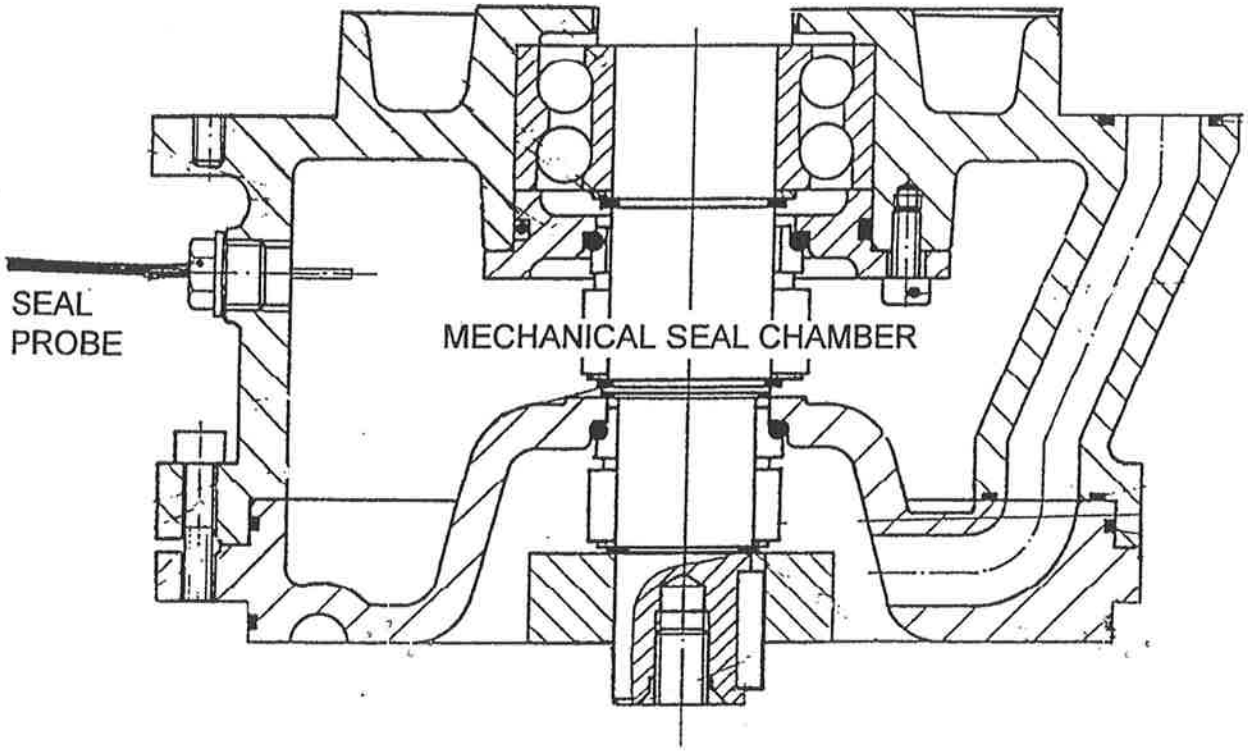


Principle of Operation

Sensor is installed in the mechanical seal chamber which contains an electrically non-conductive oil. The presence of water changes the chamber fluid mixture to a conductive condition and therefore completes the circuit which will result in a leakage indication on the customer supplied control panel.

Electrical Specifications
Sensor Type : Conductive
Suggested Seal Fail Relay Voltage : 24 VAC
Required Wiring : Single wire in separate sensor cable to be connected to seal leak relay in control panel by customer. Two wire probe is available. Please consult factory.

Cable Length : 30 feet is standard. Longer lengths are available. Please consult factory

# Accessory Data

## Media Cooled, Jacketed Pump Construction

The stator is cooled by the circulation of a portion of the pumped liquid in the space between the stator casing and the cooling jacket.

In the standard media cooled design, ambient temperature pumpage is taken from behind the impeller and is ported into the cooling jacket chamber. The cool liquid entering the bottom of the chamber, forces the warm liquid into the extended return port at the top of the jacket. The warm liquid is then returned to the volute chamber. Because of the close running tolerances between the impeller back vanes and the rear cover, large solids are prevented from entering the cooling chamber.

For severe solids loading or for high temperatures pumpage, our pump construction also permits the use of external cooling liquid. Inlet and Outlet cooling ports are added to the SS jacket to permit external flush water to be used, and the bypass ports are closed off during pump assembly.

An alternate configuration is also offered which utilizes an external inlet coolant port, with the internal outlet port returning the liquid to the pump chamber. This permits an external flush to augment the media cooling and can serve as a continuous flush in heavy solids applications.

**See Tech Page for Closed Loop Cooling System Option.**

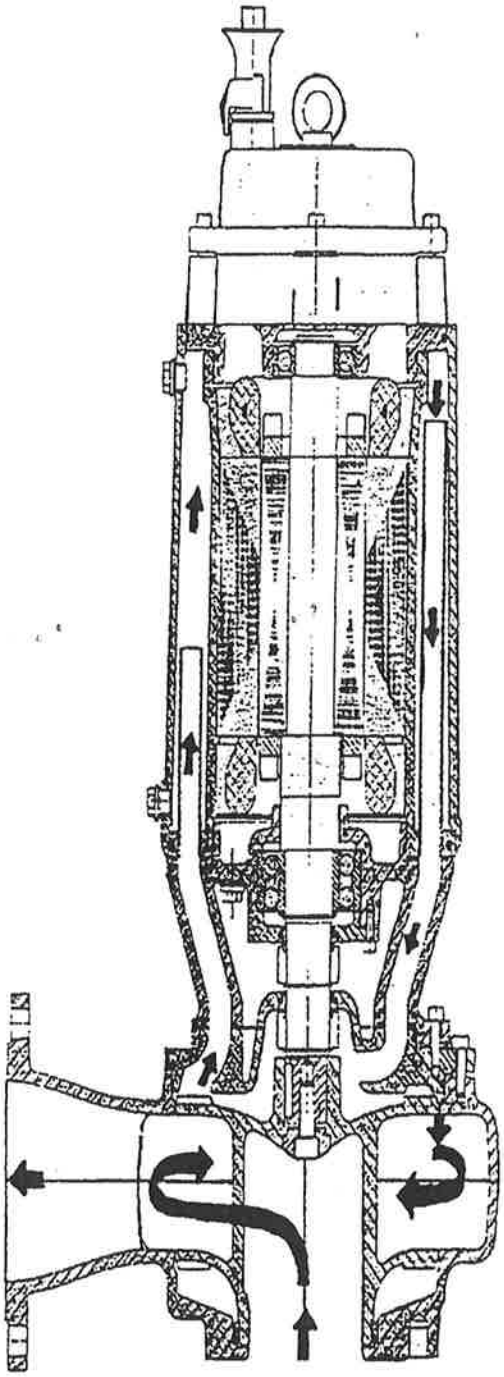

PTI reserves the Right to change Product, Material or Design Data as required without Notification.

HOMA PUMPEN MIT SYSTEM

# Dimensions

AK636-320/20PUFM

Wet well installation with auto coupling kit (PU-motor, 320, FM, 6")
Dimensions in inch, letters see table

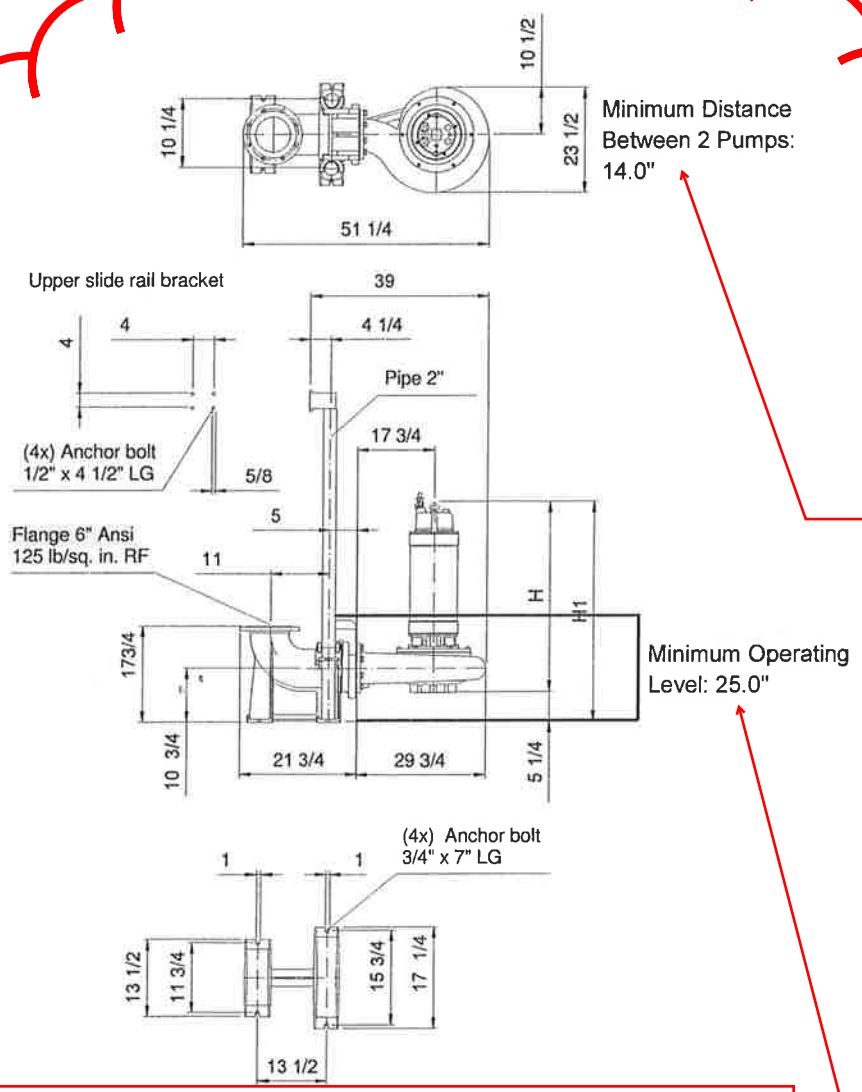


Minimum Distance Between 2 Pumps: 14.0"

Using this spacing between the pumps, confirm the resulting distance from the outside edge of the two outer pumps to the wall is acceptable.

Minimum Operating Level: 25.0"

For single pump operation, the "on" elevation needs to be at or below the lowest pipe invert into the wet well, which is El 5.0. With a minimum operating level of 25 inches, the off point will have to be at EL 4.7 (2.65+2.08). This leaves only a 0.3 ft (4 inch) operating envelope for single pump operation. Confirm the pumps can be effectively controlled and a level setpoint maintained within this small of an operating envelope; or deepen wet well as needed to provide a greater operating envelope.

(The specified Flygt pump had a minimum operating level of approx. 15 inches.)

**Table D**

H
H1

Homa Pump Technology Inc. (internal)

2.0 - 11.01.2008 (Build 137)

| Project: | Project no.: | Created by: | Page: | Date: |
|---|---|---|---|---|
| Pump Service Tray | Arcadis- Newark, NJ rev2 | H Sura | 3 | 2011-07-22 |

HOMA

PUMP TECHNOLOGY

# A Series

## Installation, Operation & Maintenance Manual

**Project:** _____

**Installation:** _____

**Pump Model:** _____ **Serial Number:** _____

*AIOM REV. 4/09*

**HOMA Pump Technology, Inc.**
390 Birmingham Boulevard • Ansonia, CT 06401

## ELECTRICAL INSTALLATION:

### GENERAL GUIDELINES

All electrical work shall be carried out under the supervision of an authorized, licensed electrician. **The present state adopted edition of the National Electrical Code as well as all local codes and regulations shall be complied with.**

### VERIFICATION OF POWER SUPPLY

Prior to making any electrical connections or applying power to the pump, compare the power supply available at the pump station to the data on the unit's nameplate. *Confirm that both voltage and phase match between pump and control panel.* The voltage supplied at the pump shall be +5 / -10% of the nameplate value, frequency shall be + / - 1% of the nameplate value, the voltage phase balance shall be within 1% and the maximum corrected power factor shall be 1.0.

### POWER LEAD WIRING

HOMA A Series pumps may be provided with 1 or more cables, depending on motor horsepower and operating voltage. Power leads L1, L2, & L3 may be provided as single conductor, or as multiple conductors. Multiple conductor configurations may use leads from separate cables, or may use two conductors within one cable. Please refer to wiring diagram in the appendix for specific connection details. *The pump must be connected electrically through a motor starter with proper circuit breaker protection in order to validate warranty. Do not splice cables.*

### THERMAL SWITCH WIRING :

Pumps are equipped with thermal switches embedded in the stator windings which are normally closed, automatically resetting switches. Switches will open when the internal temperature rises above the design temperature, and will close when the temperature returns to normal. Thermal switches must be wired to a current regulated control circuit in accordance with the NEC.

Identify thermal switch leads marked T1 and T3 in the power or control cable.

The resistance across the leads will be .5 Ohms. Thermal leads must be connected to the thermal overload relay located in the control panel. *Thermal switch leads must be connected to validate warranty.*

**Note: All sizes of Class 1, Div. 1 pumps for hazardous service must have thermal switch leads connected to a current regulated control circuit in accordance with NEC.**

### SEAL PROBE WIRING

The mechanical seal leak detector probe utilized in the pump is a conductive probe which is normally open. The intrusion of water into the seal chamber completes the electrical circuit. Control panel provisions will sense this circuit closure, and will provide indication or alarm functions depending on the panel design.

Either single or dual wire systems may be provided. Single wire systems utilize one energizing conductor, and the pump casing and neutral lead as the ground or return portion of the circuit. The dual wire systems utilize two separate conductors for each leg of the circuit. With either system, the seal probe leads must be wired into a control circuit provided in the control panel. This control circuit must energize the probe with a regulated power source, and sense the closed circuit in event of water intrusion. Indication and alarm functions must also be provided in the control circuit. Please see control panel wiring diagram for seal probe connection points. *IMPORTANT: For Hazardous Area Classification Pumps, leak detector circuit must be in conformance with applicable NEC codes and regulations.*

### START / RUN CAPACITORS AND RELAYS:

All single phase motors require start and run capacitors along with a start relay to operate. Refer to the wiring diagram in the appendix. Capacitors and relays must be sized for the specific motor.

Capacitors are sized based on ideal conditions. The run capacitor may need to be resized to match the available field voltage. Each cap kit shipped is supplied with a wiring diagram and start up procedure.

*If the base is not level, proper sealing of the pump to base may not occur!*

Place the guide rails (supplied by others), cut to length in to the rings of the base. The rails will be secured at the top of the pump station with the upper guide bar bracket and to extend down to the sump floor.
Install the upper guide bar bracket as shown in the appendix.

*For stations exceeding 10 feet in depth intermediate guide bar brackets are recommended. One bracket is recommended for each additional 10 feet of station depth.*

Check that the guide system is properly installed in the vertical orientation by using levels and a plumb line. Fully tighten all anchors and mounting bolts.
Connect the station riser piping to the outlet flange of the base.

Before lowering the pump, verify the direction of impeller rotation (refer to start-up section for procedure).

**Make sure to use lifting equipment that has adequate capacity for the pump that will be handled.** Before installing pump, check to be certain the profile seal (rubber ring) is properly positioned in the guide claw flange. Then position pump so the guides on the discharge flange engage the rails. Slowly lower the pump along the guide rail. Once the pump reaches its bottom location it will automatically connect to the base.

*It is recommended that the stationary base elbow be visible before lowering the unit. If this is not possible, ensure all debris is removed from wet well.*

Important: Do not install more than one (1) check valve into any piping system or problems will occur.

## INSTALLATION OF PUMPS WITH RING STANDS:

The ring stand design allows for a free standing, simple economical installation or to be transportable from one installation to another.
It is intended to operate completely or partially submerged in the pumping liquid.
Install the ring stand to the underside of the volute with the supplied fasteners provided.
Apply thread locking compound such as blue #242 and tighten the bolts using the torque table indicated in the table. Do not over tighten!
Install suitable lifting devise of an adequate length to ensure proper lowering and raising capabilities. Lower the pump into the area where it is required. Properly position power cable and chain so they stay above pump and cannot enter the pump suction.

## INSTALLATION OF PUMPS FOR DRY PIT APPLICATIONS:

**Foundation and Piping Requirements:**

General

The following recommendations are basic guidelines which are intended to outline basic requirements in the design of the dry pit station. It is essential that a licensed professional engineer be retained by the owner to design the station and all support structures.

Foundations

Foundations may consist of any structure heavy enough to provide permanent rigid support for the pump and inlet elbow stand. Concrete foundations built up from the solid ground are the most commonly used. The concrete floor shall be level. The space required by the inlet stand and the location of the foundation anchor bolts are shown on the outline dimension drawing. Foundation bolts are to be embedded in the concrete.

## Jacketed Pump Option

The cooling jacket has been supplied based upon the specified operating conditions of this application. It is important this jacket is function properly, or the internal motor components could become damaged.

Several cooling configurations are available depending upon customer preference and system requirements. You must know what configuration of cooling system is to be used with the pump prior to installation. In some cases, field test results may indicate a change of cooling method is required. Consult factory for necessary changes to the pump.

**Cooling Requirements**

**1 - Standard Media Cooled** – This construction does not require any external piping and it is completely self-contained. This design is suitable for the routine collection system application. No pump modifications are required.

Required Hardware – Automatic air bleed valve mounted in upper vent port or a ¼" or 3/8" elbow and small block valve for venting. A length of hose routed to the sump should be attached to either air bleed or the block valve outlet.
Start Up Requirements – This jacket must be vented at start up. Additional venting may be required after situations where the suction or discharge piping has been removed for maintenance and reinstalled. Some adverse operating conditions can allow air to become trapped in this jacket. This must be periodically vented off. If this occurs, it is recommended the small air bleed valve is utilized.

**2 - Media Cooled with External Flush** - This construction requires an external flow of water, typically re-use water. Applications which require this option are typically heavy slurry or sludge service often found in the treatment plant. This option routes the externally supplied water into the pumped media. No pump modifications are required.

Required Hardware – Mounting a regulating valve, pressure gauge and automated block valve between the water supply and the upper jacket port is required. The supply valve should be adjusted to allow the supply of water to exceed pump discharge pressure. This assures a positive flow of water into the pump chamber. The block valve should be automated to open whenever the pump is operated.

Start Up Requirements – This jacket must be vented at start up Additional venting may be required if cooling water supply is interrupted.

**3 - External Fluid Cooled** - This option requires an external flow of water like in option 2 above, but is used where dilution of the pumped product is not desirable. The supply of water is internally isolated from the pumped media. The water inlet is routed into the jacket's lowest port and returned out of the highest port. This option does NOT allow water to enter the pumped media and pump must be ordered from factory this way.

Required Hardware – Mounting a regulating valve, pressure gauge and automated block valve between the water supply and the upper jacket port is required. The supply valve should be adjusted to allow for a good supply of water to flow through the jacket. The block valve should be automated to open whenever the pump is operated.
Start Up Requirements – This jacket must be vented at start up. Additional venting should not be required.

**Vent Valve Installation**

HOMA dry pit pumps are supplied with a valve and fitting that must be installed and maintained to ensure the proper performance of these pumps.
The opening for this valve is located on the base of the motor cap near the mounting screws. The pump is shipped with a plug installed which must be removed prior to start up.
This opening is a metric straight thread and requires an adapter included with the valve and fitting hardware. It is also recommended that a length of hose be attached to the valve and routed back to the sump.

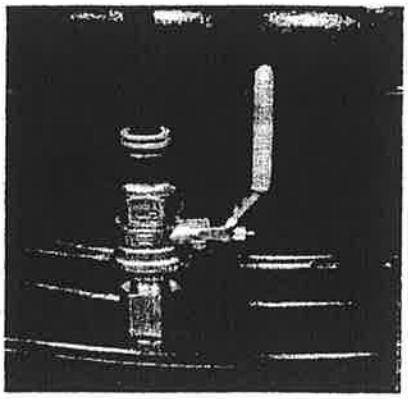

**Note: Leave vent valve open in wet pit pump application to prevent air entrapment in jacket.**

## MAINTENANCE

Regular maintenance will help ensure longer pump life and more reliable operation. It is recommended that pumps in intermittent operation be inspected twice a year and pumps in continuous operation be inspected every 1,000 hours. The following is a listing of required inspection and maintenance items.

**If any of the problems described in the following list exists stop operating the pump to avoid damage or personal injury.**

### 1. CABLE ENTRY

Make sure that the cable entry flange and strain relief clamp are tight. If the cable entry is showing signs of leakage remove cable from entry, remove grommet, cut a piece of cable off so that the grommet seats on a new portion of the cable, replace grommet, and reinstall cable assembly, into the top of the motor.
*Note: Explosion Proof cables are sealed with a Factory Mutual Approved potting compound. Please consult factory for instruction.*

### 2. CABLES

Inspect the cable for cuts, scrapes or sharp bends. If the outer jacket is damaged, replace the cable. Splices of the power or control cable within the wet well area are not acceptable.

### 3. MOTOR INSULATION RESISTANCE

Megger the insulation between the phases; and between any phase and ground. Resistance values should be greater than 1 M ohm. If abnormal readings are obtained, contact authorized service center immediately.

### 4. EXTERNAL PARTS ON PUMP

Make sure that all screws, bolts and nuts are tight. Check the condition of pump lifting eyes and replace if damaged or worn, Replace any external part that appears worn or damaged.

### 5. SEAL CHAMBER OIL

*Note: Use extreme care when removing the seal chamber plug, as the chamber may become pressurized if seal failure has occurred.* Seal chamber oil should be checked for signs of water intrusion, or other impurities any time the pump is removed from wet well. To check the condition of the oil, remove the oil fill plug. Drain the chamber volume into a transparent container. Visually check sample for impurities or emulsification (oil may appear cream-like if a small amount of water is present). If significant water intrusion has occurred, remove and replace lower mechanical seal. Unless obvious mechanical damage has occurred to the lower seal, it is good practice to replace the upper and lower mechanical seals as a set. Refill seal chamber with fresh oil to the bottom of fill plug port (when pump is in vertical position) and replace oil fill plug.

### 6. IMPELLER

Periodically inspect impeller by turning pump on its side, remove suction strainer nuts and strainer to expose impeller and relocate position of adjusting plate (suction cover) as needed. Replace the impeller if it is damaged or worn.

## SPARE PARTS

In order to obtain spare parts identify the required parts by looking at the enclosed cross sectional drawing and listing, and contact authorized HOMA PUMP TECHNOLOGY representative with your order. Authentic Homa Pump Technology parts shall be used to maintain warranty.
*Note: Explosion Proof pumps must be identified as such, and the pump serial number must be referenced for proper parts identification.*

## RECOMMENDED TOOLS AND SUPPLIES

In addition to ordinary maintenance and lifting devices, ensure that complete set of metric Allen wrenches, impeller puller, Loctite 242 (Blue), and Anti-seize compound are on hand.

## *PROFILE SEAL INSTALLATION*

### IMPORTANT

Black Rubber Sealing Ring (Profile Seal) must be installed in the Guide Claw before pump is installed. Ring must be installed with the large diameter lip inside the groove of the Guide Claw Flange.

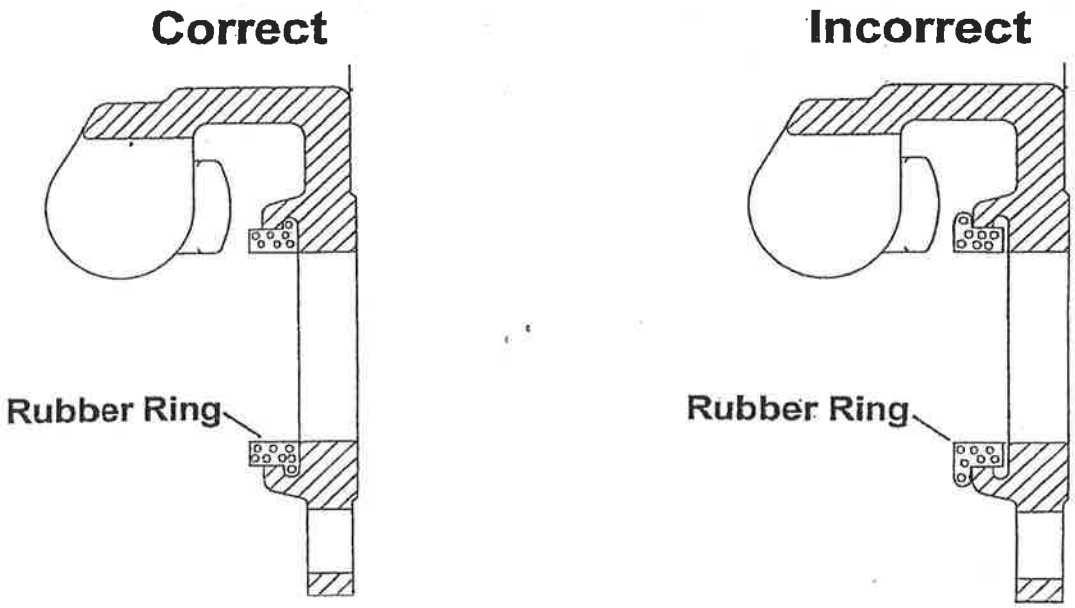


**CALL OUR TECHNICAL SUPPORT GROUP WITH ANY QUESTIONS REGARDING THE INSTALLATION OF THIS EQUIPMENT.**

# 3 Phase Cable Connection Diagram

Note: If wire numbers or markers are different than shown, consult factory!

## 7 Conductor

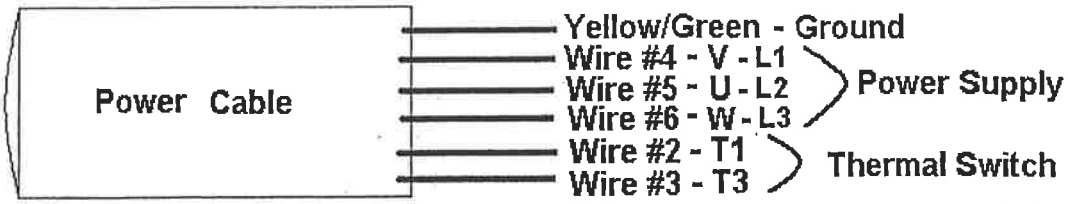


## 10 Conductor

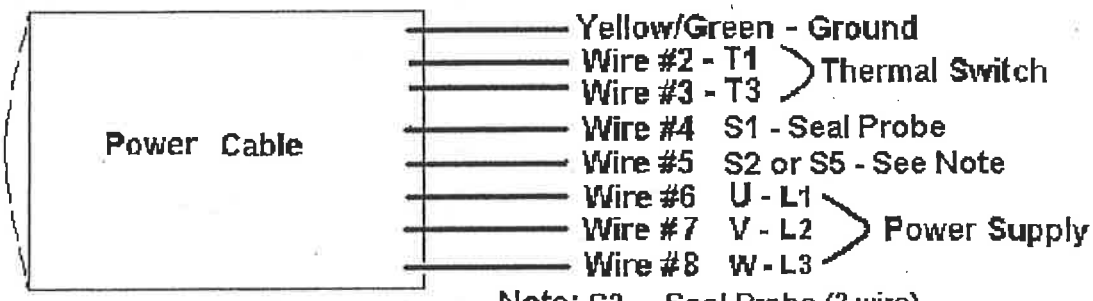


Note: S2 - Seal Probe (2 wire)
S5 - Stator Leakage Probe

## Dual Power Cable

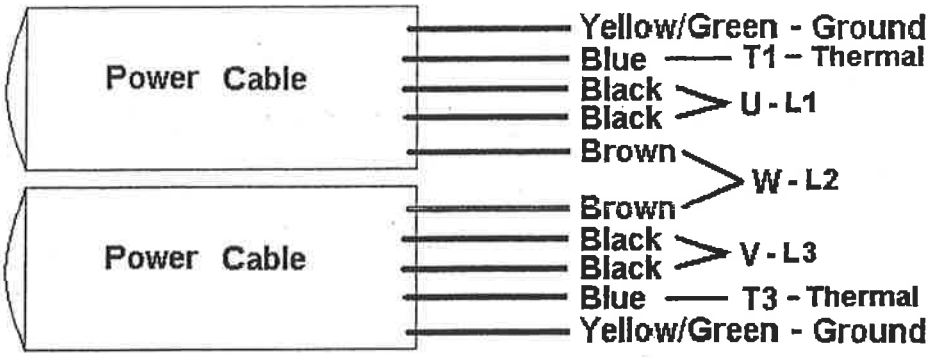


## Power and Control Cable

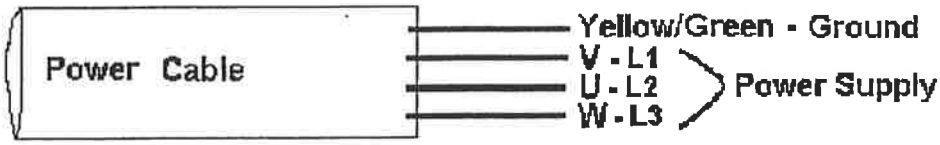


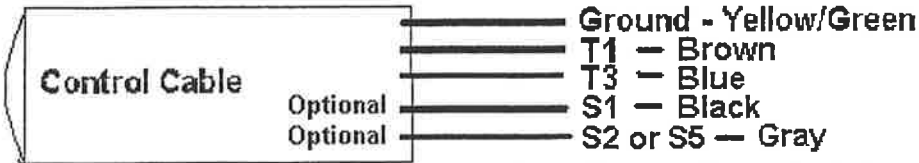


Note: S2 - Seal Probe (2 wire)
S5 - Stator Leakage Probe

# 3 Phase Cable Connection Diagram
## T Motor

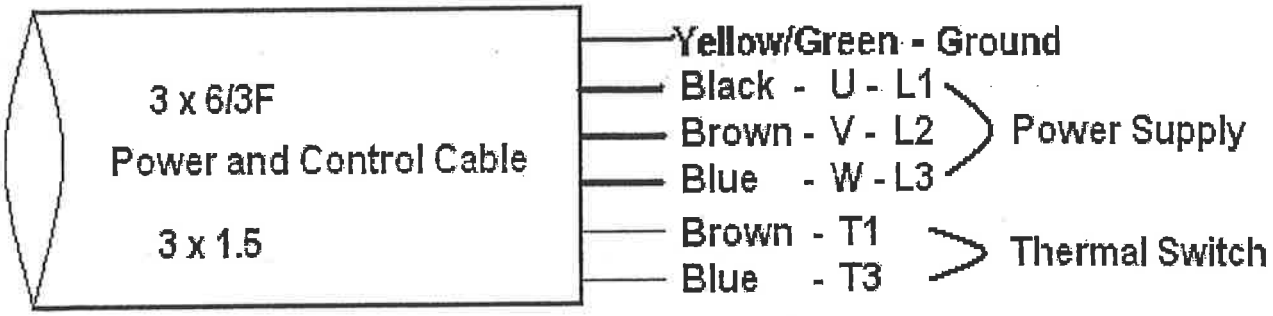


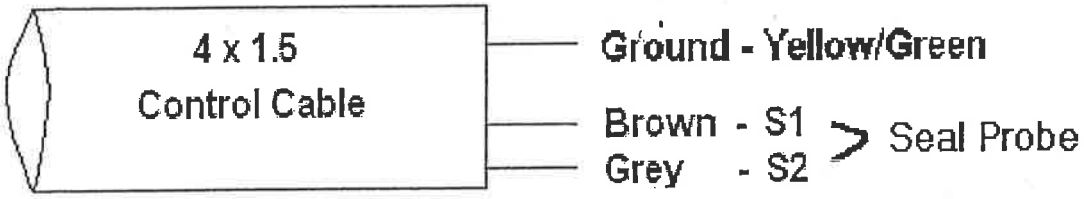

# 1 Phase Cable Connection Diagram
# C, D, N & T Frame Motors *

Note: If wire numbers or markers are different than shown, consult factory!

## 7 Conductor Cable

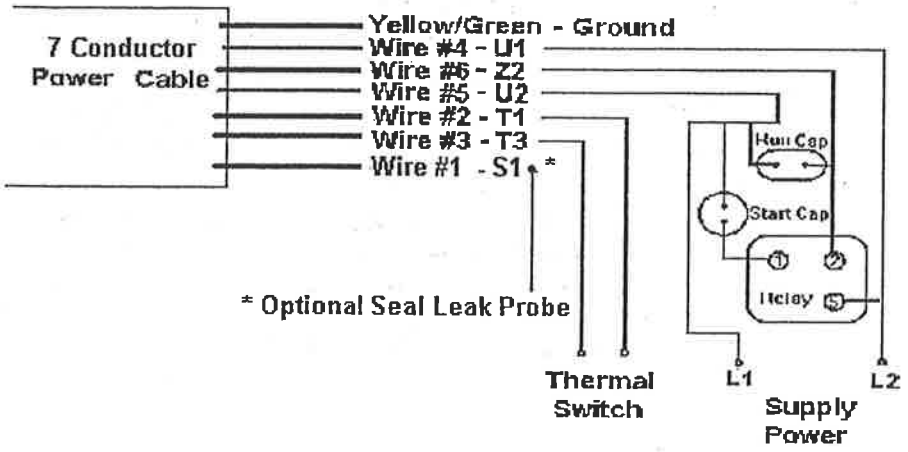


## 10 Conductor Cable

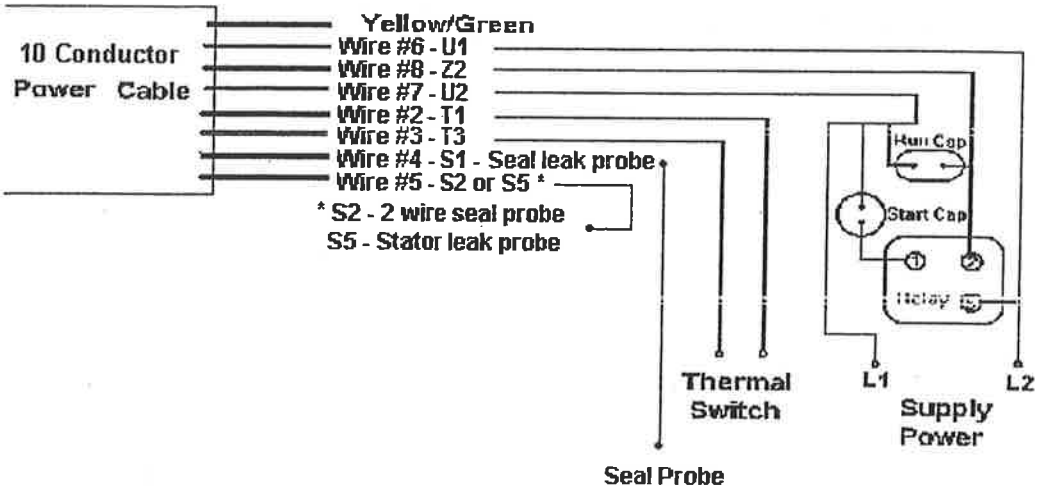

# C, D & T Motor Capacitor Sizing Chart

| Pump Model | Start Capacitor | Run Capacitor | Cap Kits |
|---|---|---|---|
| AMX334-434/1-1422/C/C | 80uf@330V | 40uf @370V | 8807010 |
| AMX334-434/1-142/2.5D | 80uf @ 330V | 50uf @ 370V | 8857060 |
| AMX334-434/1-142/2.9T/C | 60uf @ 330V | 40uf @ 370V | 8857065 |
| AMX334-434/1-155/3.6D | 80uf @ 330V | 50uf @ 370V | 8857060 |
| AMX334-434/1-155/4.3T/C | 100uf @ 330V | 50uf @ 370V | 8857035 |
| AMX334-434/1-155/5.1T/C | 100uf @ 330V | 50uf @ 370V | 8857035 |
| AMX334-434/1-178/3.6D | 80uf @ 330V | 50uf @ 370V | 8857060 |
| AMX334-434/1-178/4.3T/C | 100uf @ 330V | 50uf @ 370V | 8857035 |
| AMX334-434/1-178/5.1T/C | 100uf @ 330V | 50uf @ 370V | 8857035 |
| AMX334-434/1-184/5.1T/C | 100uf @ 330V | 50uf @ 370V | 8857035 |
| AMX334-434/1-193/5.1T/C | 100uf @ 330V | 50uf @ 370V | 8857035 |
| AMX334-434/1-193/6.7T/C | 120uf @ 330V | 60uf@ 370V | 8857070 |
| AMX334-434/1-206/6.7T/C | 120uf@ 330V | 60uf@ 370V | 8857070 |
| AMX334-434/1-206/9.7T/C | 150uf @ 330V | 80uf@370V | 8857075 |
| AMX334-434/1-218/9.7T/C | 150uf@330V | 80uf@370V | 8857075 |
| AMX334-434/1-228/9.7T/C | 150uf@330V | 80uf@370V | 8857075 |
| AMX334-434/1-228/11.4T/C | 250uf@330V** | 120uf@370V* | 8857080 |
| AMX334-434/1-235/11.4T/C | 250uf@330V** | 120uf@370V* | 8857080 |
| AMX334-434/1-250/11.4T/C | 250uf@330V** | 120uf@370V* | 8857080 |

** (2) 60uf run capacitors in parallel are required.*
*** (1) 150uf & 100uf start capacitor in parallel required.*

***Consult factory for A Frame motors with centrifugal switch.**

## External Seal Probe Wiring

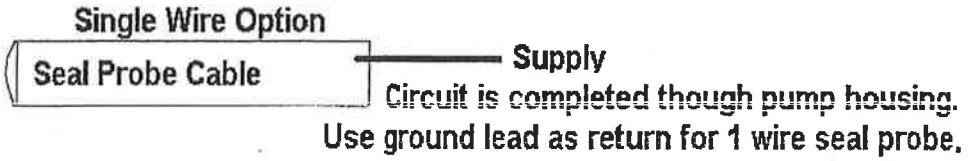


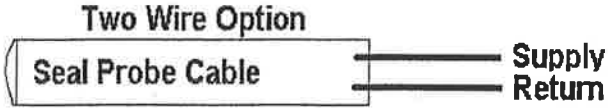


**Seal Probes must be connected to a Homa Go Switch or suitable controller to operate.**

7.) Starting Devices

Are pumps being started DOL, or with Soft Start device. Indicate manufacturer of Soft Starter. _____

Are any vibrations evident while pump is being controller by the soft starter? _____

Are pumps being operated with VFD (Variable Frequency Drive)? _____

Please indicate brand and model VFD: _____

Are load reactors being used between VFD output and pump? _____ Please indicate size _____

What ramp up and decel time is the VFD set for? Accel _____ seconds, Decel: _____ seconds

What is the minimum frequency the pump can operate at in this system? _____Hz. Is low speed limit set?_____

8.) Final Check:

Are Thermal Switches properly wired? _____What Over-temperature Relay is being used? _____

Is Pump Seated On Discharge Properly? _____ Check For Leaks? _____

Does Check Valves Operate Properly? _____

Flow: Does Station Appear To Operate At Proper Rate _____

Vibration Level: Measured _____ Observed_____

Has the cooling jacket been vented? _____ Is a permanent cooling jacket vent installed? _____

COMMENTS: _____

9.) Equipment Difficulties During Start-Up:_____

_____

_____

_____

10.) I Certify this Report to be accurate.

Authorized Homa Service Representative:

_____ Phone #_____

(Signature)

DATE_____

Pump Station Owner/ Operator

_____ Phone # _____

(Signature)

DATE _____

# A Series Technical Details

**Seal Chamber Oil: White Mineral Oil (Chevron Lubricating Oil FM 32, 46, 68)**

**Seal Oil Volume**

| | |
|---|---|
| ALL N FRAME MOTORS | 2.5L |
| ALL T FRAME MOTORS | 2.5L |
| ALL P FRAME MOTORS | 3.7L |
| CURRENT D MOTORS | .9L |

F, G & H FRAME SEAL OIL VOLUTE VARY BY HP, PLEASE CONSULT FACTORY WITH SPECIFIC PUMP MODEL.

**Seal Oil Level**

With pump lying on its side and oil port at 12:00, measure from the top of housing with gasket in place, to the oil level.

A Series T, N & P motors: 1 1/2" from top of housing to oil level

**Minimum Distance between 2 pumps**

| | 3" Discharge | 4" Discharge | 6" Discharge | 8" & Larger |
|---|---|---|---|---|
| **AK** | Min N/A | Min 10" | Min 13" | Please consult factory for layout information |
| **AV** | Min N/A | Min 10" | Min N/A | |
| **AMX** | Min 8" | Min 10" | Min 13" | |

# Warranty

## *Municipal Installations*

## "A" Series Pumps

HOMA Pump Technology Incorporated (referred to hereafter as the Company) warrants its A Series pumps to be free from defects in workmanship and materials for the period defined below, from date of shipment to end customer, when used in a Municipal Sewage Collection or Treatment System or similar pumping application pumping raw sewage or municipal waste water of a non-corrosive, non-abrasive nature.

HOMA Pumps, when used in a Sewage Lift Station for intermittent duty cycle (less than 50% duty cycle) at a fixed speed shall be warranted for a period of 5 years as per the below terms.

HOMA Pumps, when used in conjunction with VFD drives, or in fixed speed applications of a more continuous duty cycle (50% or more) shall be warranted for a period of 12,000 hrs. of operation as per the below terms.

Important: Monitoring devices (ex. thermal switch, seal probe, etc) supplied with pump must be properly wired into a circuit within the control panel that will provide adequate protection to the pump. Failure to properly connect and utilize provided monitoring devices will invalidate this warranty.

The Company shall pay the following share of refurbishing costs provided the complete pump and power cable / defective component is returned prepaid to the HOMA Repair Center in Ansonia, CT or an Authorized HOMA Service Center. Labor charges for warranty repairs shall not be assumed by the Company for repairs made after one (1) year from date of shipment to end customer. All returns must have prior written authorization from the Company prior to shipment.

| | | TIME IN FIELD | | | |
|---|---|---|---|---|---|
| **Intermittent Duty** | **Months:** | **0-18** | **19-31** | **32-45** | **46-60** |
| **Continuous Duty** | **Hours:** | **0 - 3000** | **3000 - 6000** | **6000 - 9000** | **9000 - 12,000** |
| | **Warranty:** | **100%** | **75%** | **50%** | **25%** |

Time in field shall be determined from shipment date to date warranty claim is registered with Company.

Field Start-up Report, along with control panel wiring diagrams and bills of material must be provided with any warranty claim.

This warranty excludes failures caused by improper mechanical or electrical installation, defects or imbalance in power supply or electrical protection, abrasive wear or improper maintenance or service activities. There must be no splice in the electrical cable within the wet well and pump thermal overload protection must be properly wired into control panel.

The Company's sole obligation under this warranty shall be to make repairs and/or replace parts when necessary on products that have been returned and found to be defective by the Company. The Company shall not be liable for any special, indirect, or consequential damages of any kind. Major components not manufactured by the Company are covered by the original manufacturer's warranty in lieu of this warranty.

***The Company will not be held responsible for travel expenses , rented equipment, outside contractors fees, or unauthorized repair expenses.***

The company neither assumes nor authorizes any person or other company to assume for it, any other obligation in connection with the sale of its equipment. Any enlargement or modification of this Warranty by a Representative, Distributor or other Sales Agent is expressly forbidden by the company. This warranty shall extend only to the original Owner and shall not apply to any products that have been repaired or altered without the Company's consent or have been subject to misuse, accident or neglect.

**NO OTHER WARRANTIES EXPRESS OR IMPLIED, INCLUDING IMPLIED WARRANTIES OF MERCHANTABILITY AND FITNESS FOR A PARTICULAR PURPOSE WILL APPLY.**

## Accessories

| Qty | | Mfg/Description | Part Number |
|---|---|---|---|
| 3 | Auto Coupling Assembly | HOMA, 6", Elbow, Pump Claw And Anchor Bolts Included | |
| 3 | Upper Rail Bracket | HOMA, Included with Auto Coupling Assembly | |
| 3 | Discharge Base | HOMA, Included with Auto Coupling Assembly | |
| 3 | Seal Probe | HOMA | |
| 1 | Float Bracket | Halliday, Stainless Steel | J4A |
| 6 | Guide Rail | 2" x 5', Schedule 40, Galvanized | |

HALLIDAY PRODUCTS

## ~~STAINLESS STEEL CABLE~~

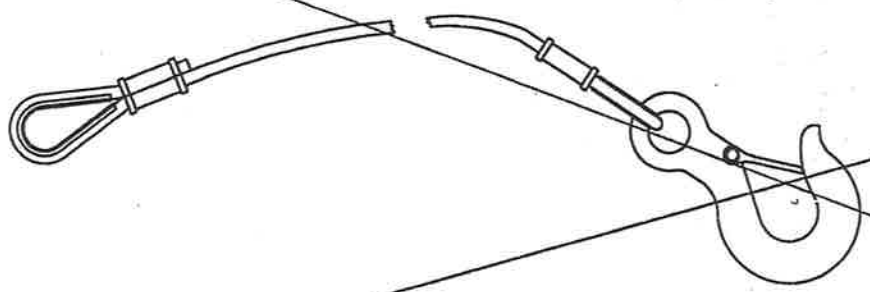

## SERIES K
(STAINLESS STEEL CABLE)

### STANDARD FEATURES:

- COMPLETE WITH HOOK AND EYE
- 1/4" DIA. STAINLESS STEEL CABLE TYPE 304 (TYPE 316 OPTIONAL)
- 1285 LBS. SAFE LOAD
- STAINLESS STEEL THIMBLES
- NICOPRESS SLEEVES
- 1 1/2 TON EYE HOOK WITH STAINLESS STEEL SAFETY LATCH
- TYPE 316 STAINLESS STEEL HARDWARE AVAILABLE
- VARIOUS CONFIGURATIONS AVAILABLE
- ANY LENGTH (SPECIFY)

## STAINLESS STEEL CABLE HOLDER

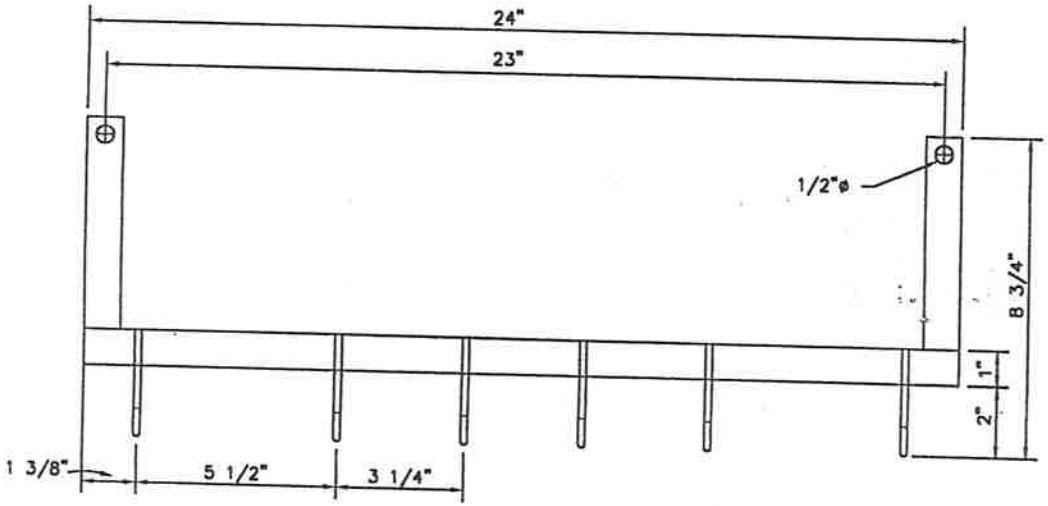


## SERIES J
(STAINLESS STEEL CABLE HOLDER)

### STANDARD FEATURES:

- STAINLESS STEEL TYPE 304 (TYPE 316 OPTIONAL)
- 6 HOOKS STANDARD
- USED FOR FLOAT SWITCHES AND LIFTING CABLES
- WALL OR ACCESS FRAME MOUNTING

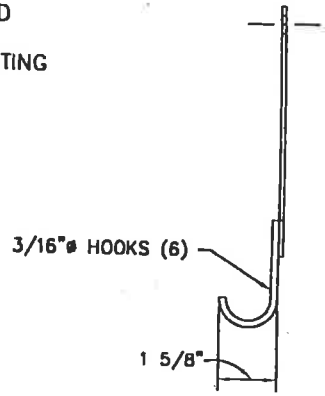

## Control

| Qty | | Mfg/Description | Part Number |
|---|---|---|---|
| 1 | Control Manufac. | Myles ElectroDynamics | Triplex |
| 1 | Pressure Transducer | Geotech, Submersible, 0-2PSI 4-20mA, 30' Cable | 82051000 |
| 2 | Float Switch | SJE Rhombus, 30' N/O Mechanically Activated | 1006053 |

# Geotech Gauge Pressure Transducers

Geotech's submersible pressure transducers are designed for ruggedness and long life to meet the harsh environments encountered in liquid level measurement and control.

## FEATURES

- High static accuracy and repeatability
- 100% computer tested and calibrated
- Temperature compensated
- Signal outputs of 4-20 mA or 1-5 Volt output
- User specified pressure ranges from 3–100 psi gauge
- 500' maximum cable length
- All wetted materials are #316 stainless steel
- Select between polyurethane or Tefzel® jacketed cable
- Sensor has ¼" NPT process fitting with protective cap
- Cable incorporates vent line to allow barometric compensation of level readings
- Field replaceable vent line desiccant cartridge
- Optional surge suppressor for lightning protection (requires both well and downwell components)

## APPLICATIONS

- Groundwater Monitoring
- Surface Water Monitoring
- Well Monitoring
- Wetted Studies
- Remediation Pump Control
- Landfill Pump Control
- Fluid Level Control

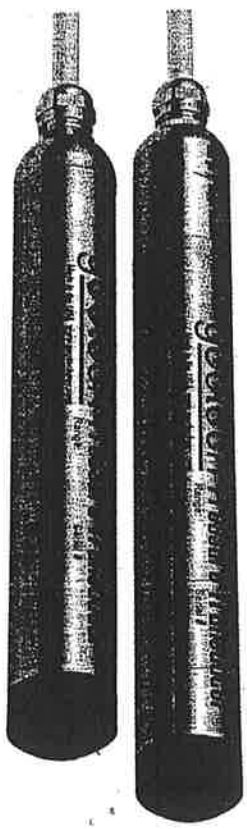

*Gauge Pressure Transducer*

*Gauge Pressure Transducer with Optional Surge Suppressor*

*Replaceable Desiccant Cartridge*

## SPECIFICATIONS

**Electrical:**

| | |
|---|---|
| **Supply Voltage** | 12-36 Volt DC |
| **Supply Current** | 25 mA |
| **Output** | 1-5 Volt DC<br>4-20 mA |

**Performance:**

| | |
|---|---|
| **Pressure Ranges (psi)** | 0-3, 0-5, 0-15, 0-30, 0-50, 0-100 |
| **Accuracy** | ±0.1% of full scale |
| **Non-linearity** | .07% of full scale |
| **Repeatability** | 0.015% of full scale |
| **Pressure Hysteresis** | 0.010% of full scale |
| **Zero Error** | ±0.1% of full scale |
| **Span Error** | ±0.1% of full scale |
| **Compensated Temperature** | -20° to 85°C |
| **Operating Temperature** | -40° to 125°C |
| **Response Time** | 2 milliseconds |
| **Life** | 1 million pressure cycles |

**Physical:**

| | |
|---|---|
| **Sensor Length** | 7 ⅛" |
| **Sensor Diameter** | 1" or .72" |
| **Sensor Weight** | 12.28 oz. (348g) |
| **Proof Pressure** | 3x psi |
| **Burst Pressure** | 5x psi |
| **Media Compatibility** | Liquids or gases compatible with 316 SS |

**Note:** Probe is protected from reverse polarity supply connection.

# SJE MILLIAMPMASTER™ Control Switch

**Mechanically-activated control switch designed to activate low current control panels and alarms.**

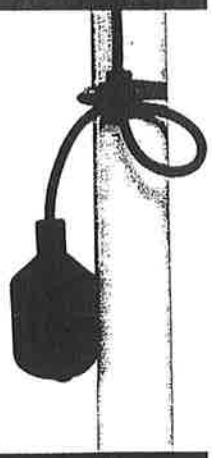

This wide-angle or narrow-angle control switch offers reliable low current control for AC and DC applications in potable water, wastewater, and sewage. The internal switching mechanism has sealed gold cross-point contacts for reliable low current operation. Common applications include PLC (programmable logic controller) panels, IS panels with intrinsically safe barriers, low current solar applications, and other low current control panels and alarms applications.

The wide-angle version activates/deactivates approximately 4" above and below horizontal with a 3.5" tether. The narrow angle version activates/deactivates at approximately 1.5" above and below horizontal with a 3.5" tether.

**Normally Open Model (high level)**
The control switch turns on (closes) when the float tips **above** horizontal signaling a high level, and turns off (opens) when the float drops below horizontal.

**Normally Closed Model (low level)**
The control switch turns on (closes) when the float drops **below** horizontal signaling a low level, and turns off (opens) when the float tips above horizontal.

## FEATURES

- Passed NSF Standard 61 protocol by an approved Water Quality Association laboratory.
- Low current, non-arching applications down to 0.160 mA at 125 VAC.
- Mechanically-activated, snap action contacts.
- High impact, corrosion resistant polypropylene float housing.
- Not sensitive to rotation.
- UL Listed for use in non-potable water and sewage.
- CSA Certified.
- Three-year limited warranty.

LR54245 LISTED 83N2

Hydraulic MEMBER Water Quality ASSOCIATION

## OPTIONS

**This switch is available:**

- for normally open (high level) applications or normally closed (low level) applications.
- with narrow or wide-angle pumping ranges.
- in standard cable lengths of 10, 15, 20, or 30 feet.
- with two mounting options that allow for flexibility in installation:

  **Mounting Clamp:** for applications where the switch can be attached to a discharge pipe or similar mounting device.

  **Externally Weighted:** for applications where the switch can be suspended from above.

## SPECIFICATIONS

**CABLE:** flexible 18 gauge, 2 conductor (UL,CSA) SJOW, water-resistant (CPE) jacket

**FLOAT:** 2.74 inch diameter x 4.83 inch long (7.0 cm x 12.3 cm), high-impact, corrosion resistant, polypropylene housing for use in sewage and water up to 140°F (60°C)

**MAXIMUM WATER DEPTH:** 30 feet (9 meters), 13 psi

**ELECTRICAL:**

**125 VAC**
**Maximum Electrical Load:** 0.1 amps
**Minimum Electrical Load:** 0.160 milliamps

**30 VDC**
**Maximum Electrical Load:** 0.1 amps
**Minimum Electrical Load:** 0.160 milliamps

**5 VDC**
**Minimum Electrical Load:** 1 milliamps

SJE Rhombus

PO Box 1708, Detroit Lakes, MN 56502
1-888-DIAL-SJE • 1-218-847-1317
1-218-847-4617 Fax
email: sje@sjerhombus.com
www.sjerhombus.com

# PUMP CONTROL PANEL

**Manufacturer:** Myles ElectroDynamics, Ltd.
**Model:** Triplex
**HP:** 25
**Volts:** 480
**Phase:** 3
**FLA:** 35.0
**Wire:** 3

**Includes the Following:**

698A U.L. Listed
Backup Float System
60" x 37" x 12" NEMA 4 Enclosure
Time Mark
Variable Frequency Drives for Flow Matching
Leg Mount
Interior Door
Panel Heating & Panel Light
Non-Fused Disconnect
Main, Motor, and Control Breakers
Elapsed Time Meter
Test Push Button
GFI Receptacle
Lightning, Primary and Secondary Arrestors
Intrinsically Safe Relay
Pump Run, Pump Fault, High Level, and Low Level Indicating Lights
Digital Display
Dry and Power Contacts
HOA Switches
Selector Switch
Push Button
Alarm Light

# PUMP SERVICE AND SUPPLY CO.

## ENGINEERING SUBMITTALS

| FILE | |
|---|---|
| JOB NAME | LOWER PASSAIC |
| REF NO. - | M1105313 |
| DATE - | 08/02/11 |
| CUSTOMER - | PUMP SERVICE AND SUPPLY |

| ELECTRICAL SERVICE | |
|---|---|
| VOLTAGE - | 480VAC |
| PHASE - | 3 PHASE |
| WIRES - | 4 WIRES |

| CONTROL SYSTEM | |
|---|---|
| TYPE OF CONTROL PANEL - | TRIPLEX |
| SENSING DEVICE - | FLOATS/TRANSDUCER |
| NUMBER OF MOTORS - | 3 |
| MOTOR H.P. - | 21HP |
| ENCLOSURE - | STEEL |
| NEMA RATING - | NEMA TYPE 4 |
| SIZE - | 60"X37"X12" |
| MODIFICATIONS - | DEAD FRONT DOOR |
| MOUNTING STYLE - | LEGS |

| PRODUCTION REQUIREMENT |
|---|
| [ ] APPROVAL WAIVED |
| [ ] APPROVED AS SUBMITTED |
| [ ] DRAWINGS APPROVED AS NOTED, "PROVIDE CLEAR AND PRECISE COMMENTS" |

APPROVAL SIGNATURE: _____

# BILL OF MATERIAL

| | | |
|---|---|---|
| **JOB NAME** | LOWER PASSAIC | **Date:08/02/11** |
| **CUSTOMER** | PUMP SERVICE AND SUPPLY | **REF NO.M1105313** |

| QTY | LEGEND | DESCRIPTION | MFG. | PART |
|---|---|---|---|---|
| 1 | | ENCLOSURE | HOFFMAN | A60HS3712LP |
| 1 | | BACK PANEL | HOFFMAN | A60P36 |
| 1 | | DEAD FRONT DOOR | SEE DWG. | 48"X36" |
| 1 | MCB | MAIN CIRCUIT BREAKER | CUTLER H. | FD3125L |
| 1 | CCB | CONTROL CIRCUIT BREAKER | CUTLER. H | QCR115 |
| 3 | VFD | VARIABLE FREQUENCY DRIVE | CUTLER H. | SVX025A1-4A1B1 |
| 3 | HOA | HAND OFF AUTO SELECTOR | CUTLER H. | E34VHBK1-Y1 |
| 6 | PL | INDICATING LIGHT | CUTLER H. | E22T3X26 |
| 9 | PL | INDICATING LIGHT | CUTLER H. | E22T2X26 |
| 1 | LGC | ALTERNATING RELAY | CROUZET | 88950043 |
| 1 | LEGS | PANEL FLOOR STAND | HOFFMAN | AFK1212 |
| 1 | DS | DISCONNECT SWITCH | CUTLER H. | F1S07C |
| 3 | MB | MOTOR BREAKER | CUTLER H. | GMCP050K2C |
| 3 | ETM | ELASPED TIME METERS | REDINGTON | 711-0160 |
| 3 | SFR | SEAL FAIL RELAY | SYMCOM | PC-102CICI-LT |
| 1 | CCT | CONTROL CIRCUIT TRANSFORMER | MICRON | B2K0BTZ13JKH |
| 5 | | SOCKETS | FINDER | 90.27 |
| 5 | CR | CONTROL RELAYS | FINDER | 60.13.8.120.0040 |
| 13 | CR | CONTROL RELAYS | FINDER | 60.12.8.120.0040 |
| 13 | | SOCKETS | FINDER | 90.26 |
| 1 | AL | DOME MOUNTED ALARM LIGHT | INGRAM | LRX-40 |
| 4 | F | FUSES | LITTELFUSE | BLN-5/250V |
| 4 | F | FUSES | LITTELFUSE | KLDR-15-600V |
| 1 | PL | INDICATING LIGHT | CUTLER H. | E22T9X26 |
| 2 | ISR | INTRINSICALLY SAFE RELAY | SYMCOM | ISS-101 |
| 1 | LA | LIGHTNING ARRESTOR | CUTLER H. | CHSA03 |
| 1 | HT/TH | PANEL HEATER WITH THERMOSTAT | INGRAM | AHC-50W |
| 1 | FL | FLASHER | SSAC | FS127 |
| 4 | RESET | RESET | CUTLER H. | E34PB4-51X |
| 3 | TD1 | TIME DELAY RELAY | FINDER | 85.02.0.125.0000 |
| 1 | | SOCKET | EDCO | PCB1B |
| 1 | ISB | INTRINSICALLY SAFE BARRIER | STAHL | 90010128016510 |
| 1 | SA2 | SECONDARY SURGE ARRESTOR | EDCO | PC-642C-030 |

| | | | | |
|---|---|---|---|---|
| 1 | GFCI | GROUND FAULT RECEPTACLE | HUBBELL | GFR5252IA |
| 1 | AEB | AUXILLARY EQUIPMENT BREAKER | CUTLER H. | QCR1020 |
| 1 | LC | LEVEL CONTROLLER | TIME MARK | 4042 (IN FEET) |
| 1 | SW | 4 POSITION SWITCH | CUTLER H. | E34VTBK1-23X |
| 1 | | FACE PLATE | CROUZET | 88970809 |
| | | | | |
| | | | | |
| | | | | |
| | | | | |
| | | | | |
| | | | | |
| | | | | |
| | | | | |
| | | | | |
| | | | | |
| | | | | |
| | | | | |
| | | | | |
| | | | | |

**NOTES: OR EQUAL ON ALL**

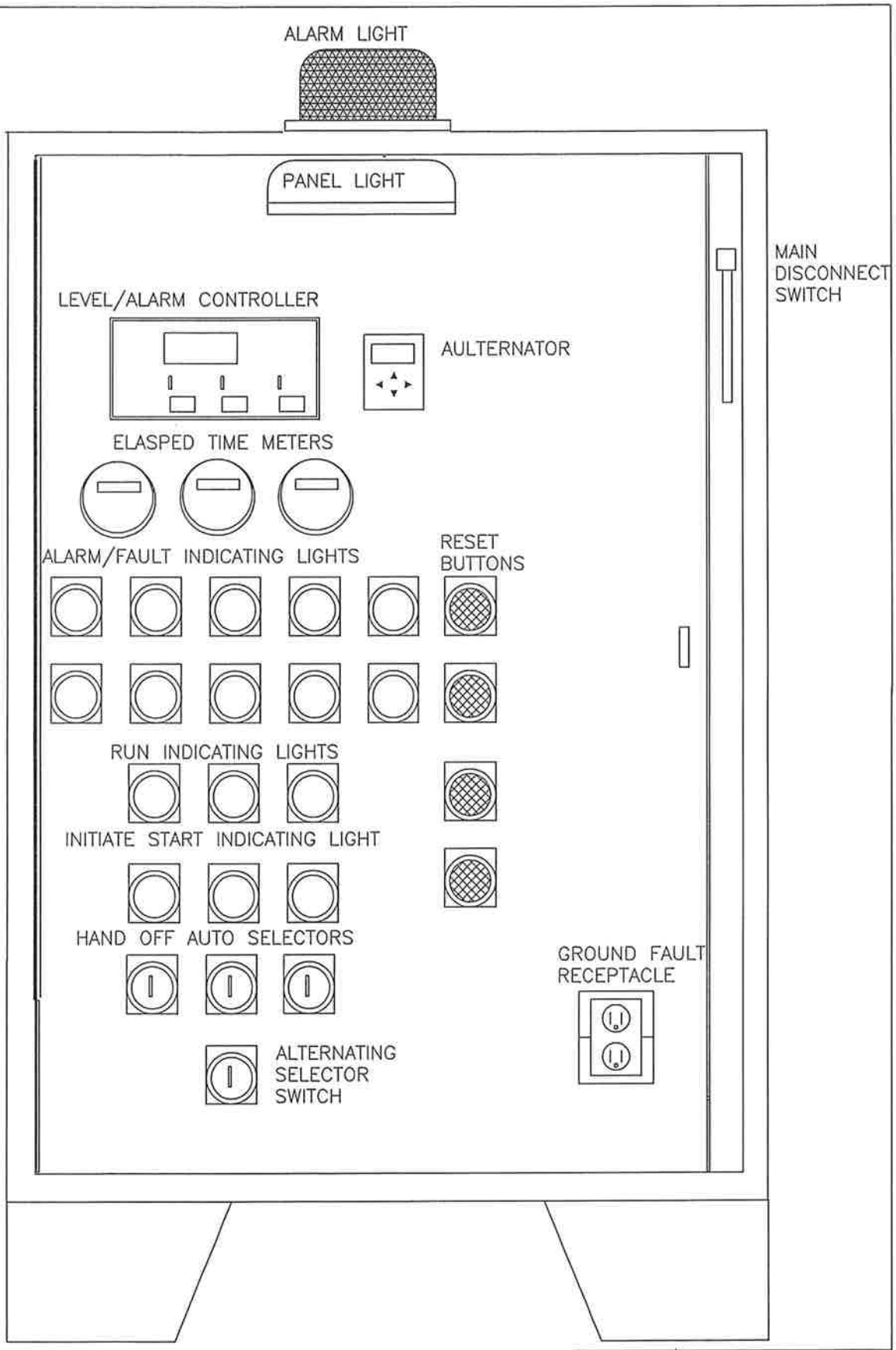


LAY OUT MAY VARY

| | |
|---|---|
| PROJECT | LOWER PASSAIC |
| DATE | 08/02/11 |
| DWG. BY RRS | CHK. BY DHM |

NOTE: LAY-OUT MAY VARY

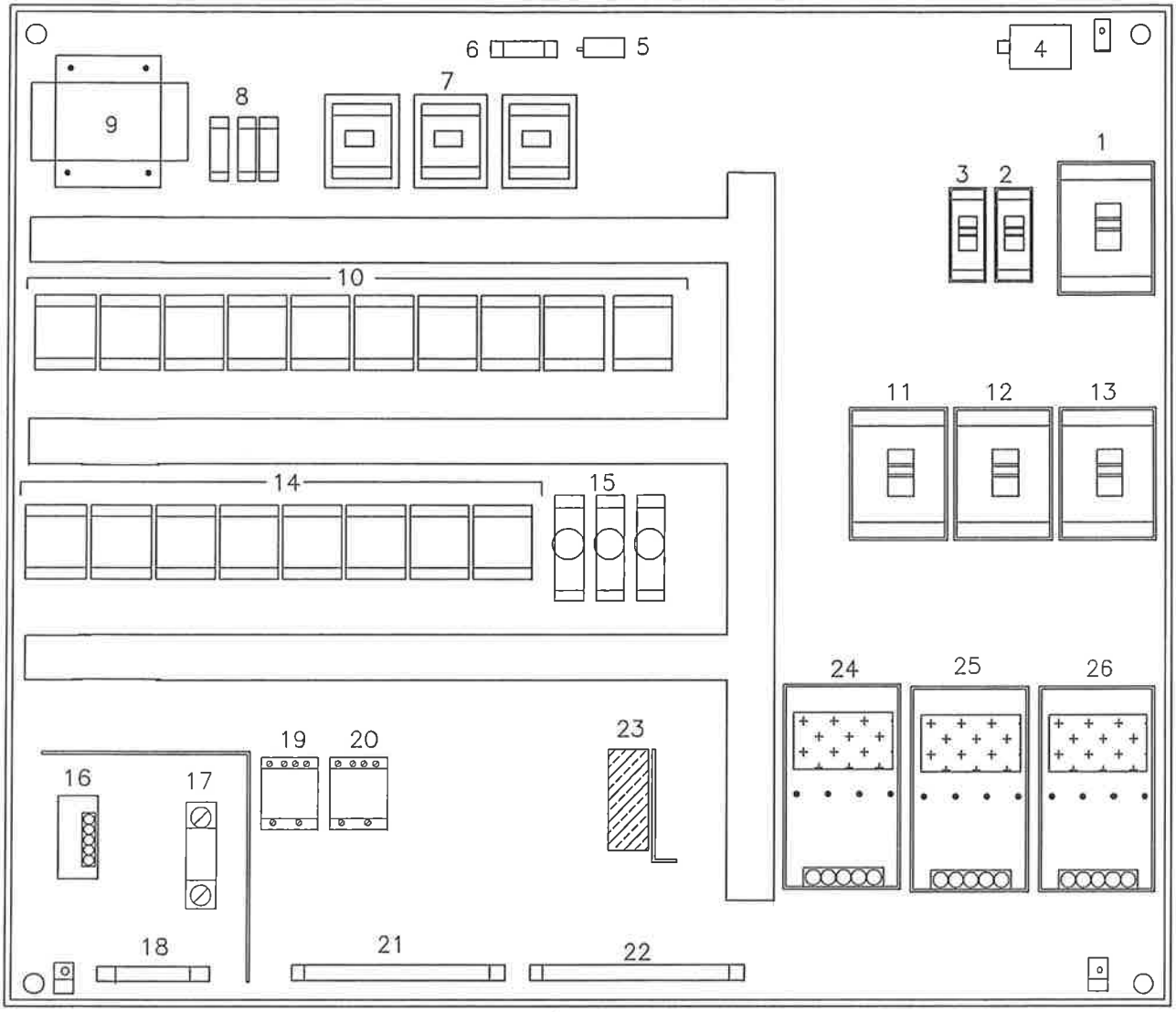


1-MAIN CIRCUIT BREAKER
2-CONTROL CIRCUIT BREAKER
3-AUXILLARY EQUIPMENT BREAKER
4-LIGHTNING ARRESTOR
5-FLASHER
6-TERMINAL STRIP A
7-SEAL/THERMAL FAIL RELAY 1 THRU 3
8-FUSES 1 THRU 3
9-CONTROL CIRCUIT TRANSFORMER
10-CONTROL RELAY 1 THRU 10
11-MOTOR BREAKER 1
12-MOTOR BREAKER 2
13-MOTOR BREAKER 3
14-CONTROL RELAY 11 THRU 18
15-TIME DELAY RELAY 1 THRU 3
16-SECONDARY SURGE ARRESTOR
17-INTRINSICALLY SAFE BARRIER
18-TERMINAL STRIP B
19-INTRINSICALLY SAFE RELAY 1
20-INTRINSICALLY SAFE RELAY 2
21-TERMINAL STRIP C
22-TERMINAL STRIP D
23-PANEL HEATER W/THERMOSTAT
24-VARIABLE FREQUENCY DRIVE 1
25-VARIABLE FREQUENCY DRIVE 2
26-VARIABLE FREQUENCY DRIVE 3

| | |
|---|---|
| PROJECT | LOWER PASSAIC |
| DATE | 08/02/11 |
| DWG. BY RRS | CK'D BY DHM |

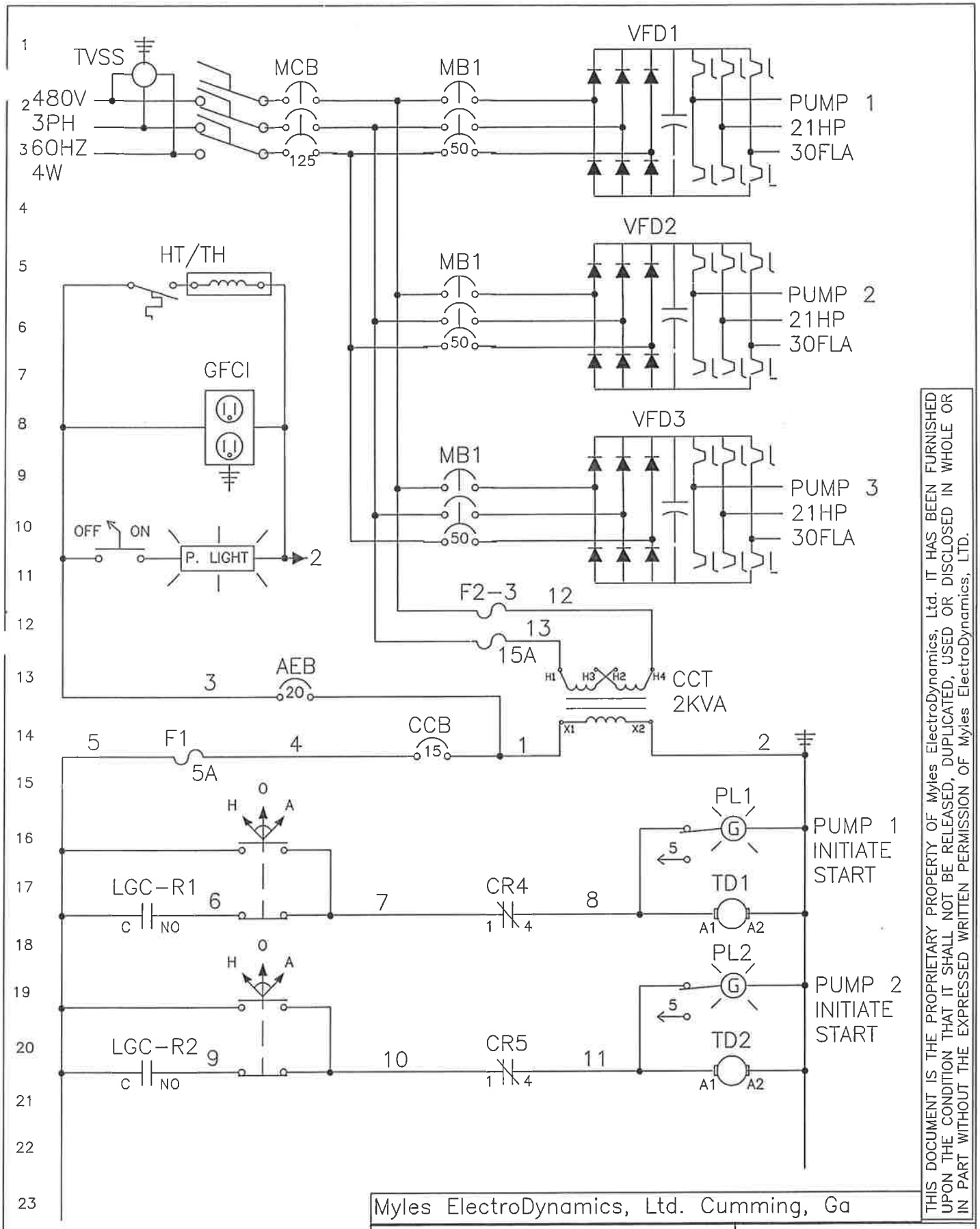


THIS DOCUMENT IS THE PROPRIETARY PROPERTY OF Myles ElectroDynamics, Ltd. IT HAS BEEN FURNISHED UPON THE CONDITION THAT IT SHALL NOT BE RELEASED, DUPLICATED, USED OR DISCLOSED IN WHOLE OR IN PART WITHOUT THE EXPRESSED WRITTEN PERMISSION OF Myles ElectroDynamics, LTD.

| | |
|---|---|
| Myles ElectroDynamics, Ltd. Cumming, Ga | |
| PROJECT: LOWER PASSAIC | JOB NO. M1105313 |
| DATE: 08/02/11 | REVISION: A |
| DWG. BY : RRS | CHECKED: DHM DATE |

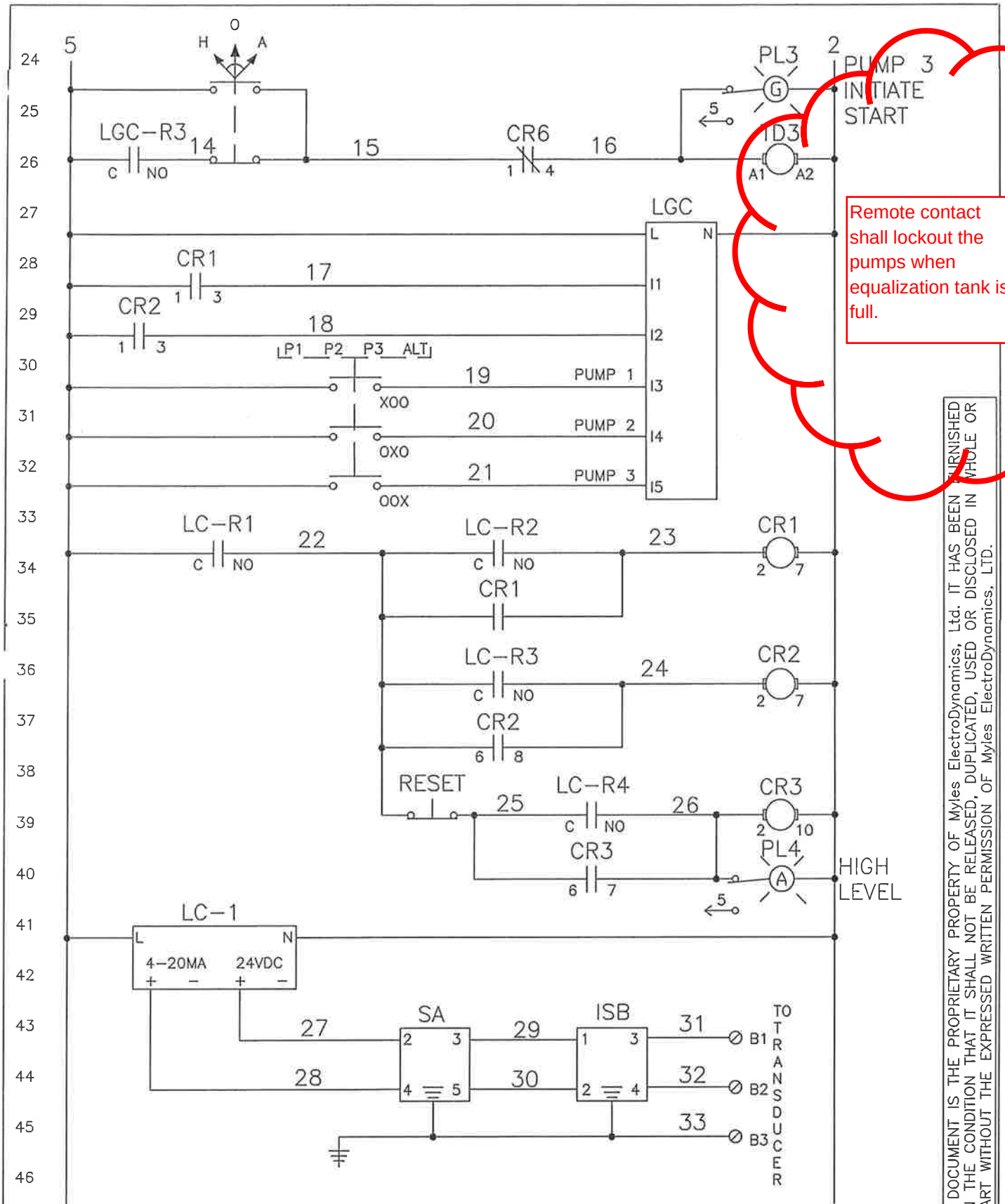


Remote contact shall lockout the pumps when equalization tank is full.

THIS DOCUMENT IS THE PROPRIETARY PROPERTY OF Myles ElectroDynamics, Ltd. IT HAS BEEN FURNISHED UPON THE CONDITION THAT IT SHALL NOT BE RELEASED, DUPLICATED, USED OR DISCLOSED IN WHOLE OR IN PART WITHOUT THE EXPRESSED WRITTEN PERMISSION OF Myles ElectroDynamics, LTD.

| | |
|---|---|
| Myles ElectroDynamics, Ltd. Cumming, Ga | |
| PROJECT: LOWER PASSAIC | JOB NO. M1105313 |
| DATE: 08/02/11 | REVISION: A |
| DWG. BY : RRS | CHECKED: DHM DATE |

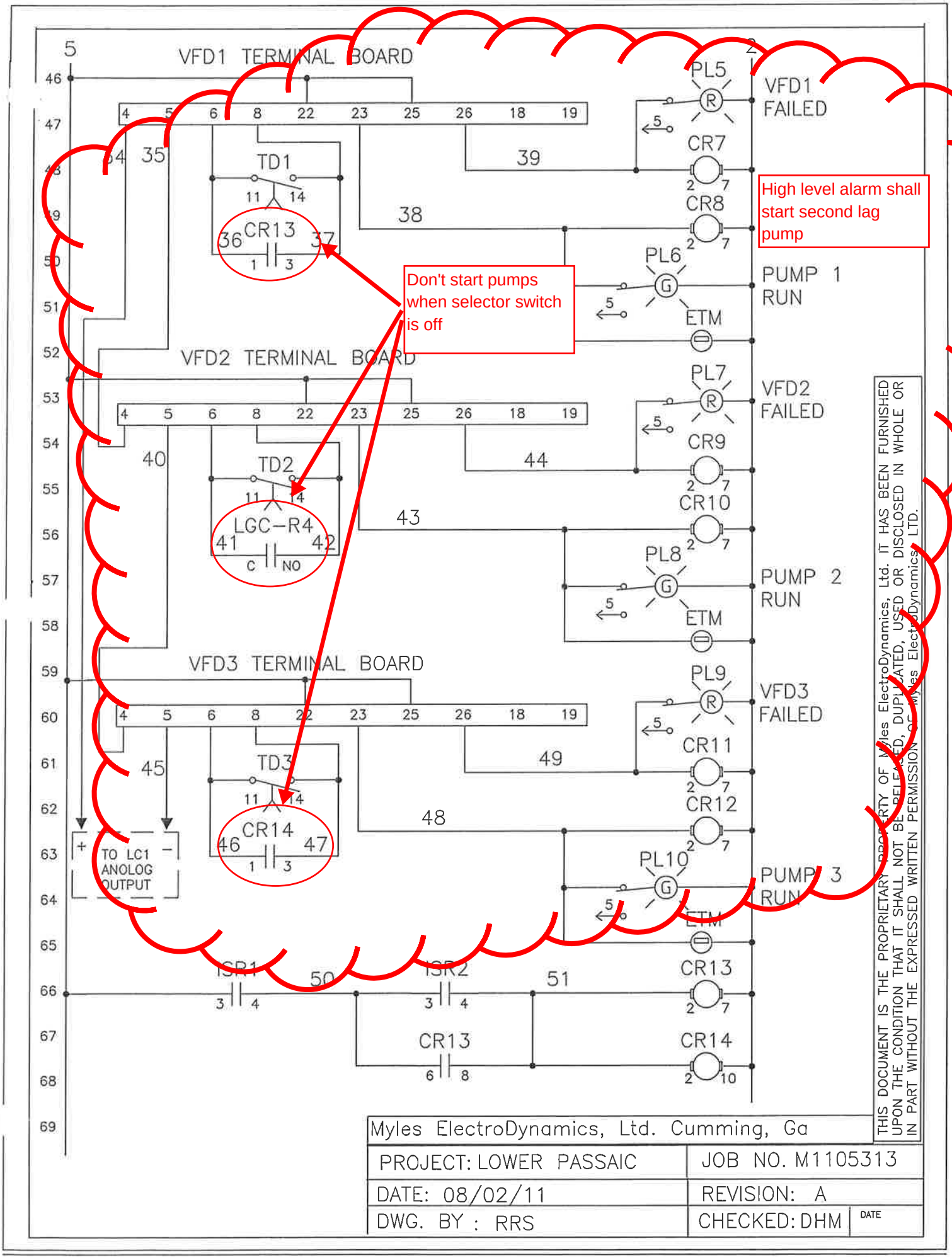
VFD1 TERMINAL BOARD
VFD2 TERMINAL BOARD
VFD3 TERMINAL BOARD
PL5
VFD1 FAILED
CR7
CR8
High level alarm shall start second lag pump
TD1
CR13
PL6
PUMP 1 RUN
ETM
Don't start pumps when selector switch is off
PL7
VFD2 FAILED
CR9
CR10
TD2
LGC-R4
PL8
PUMP 2 RUN
ETM
PL9
VFD3 FAILED
CR11
CR12
TD3
CR14
PL10
PUMP 3 RUN
ETM
TO LC1 ANOLOG OUTPUT
ISR1
ISR2
CR13
CR14
THIS DOCUMENT IS THE PROPRIETARY PROPERTY OF Myles ElectroDynamics, Ltd. IT HAS BEEN FURNISHED UPON THE CONDITION THAT IT SHALL NOT BE RELEASED, DUPLICATED, USED OR DISCLOSED IN WHOLE OR IN PART WITHOUT THE EXPRESSED WRITTEN PERMISSION OF Myles ElectroDynamics, LTD.
Myles ElectroDynamics, Ltd. Cumming, Ga
PROJECT: LOWER PASSAIC
JOB NO. M1105313
DATE: 08/02/11
REVISION: A
DWG. BY : RRS
CHECKED: DHM
DATE

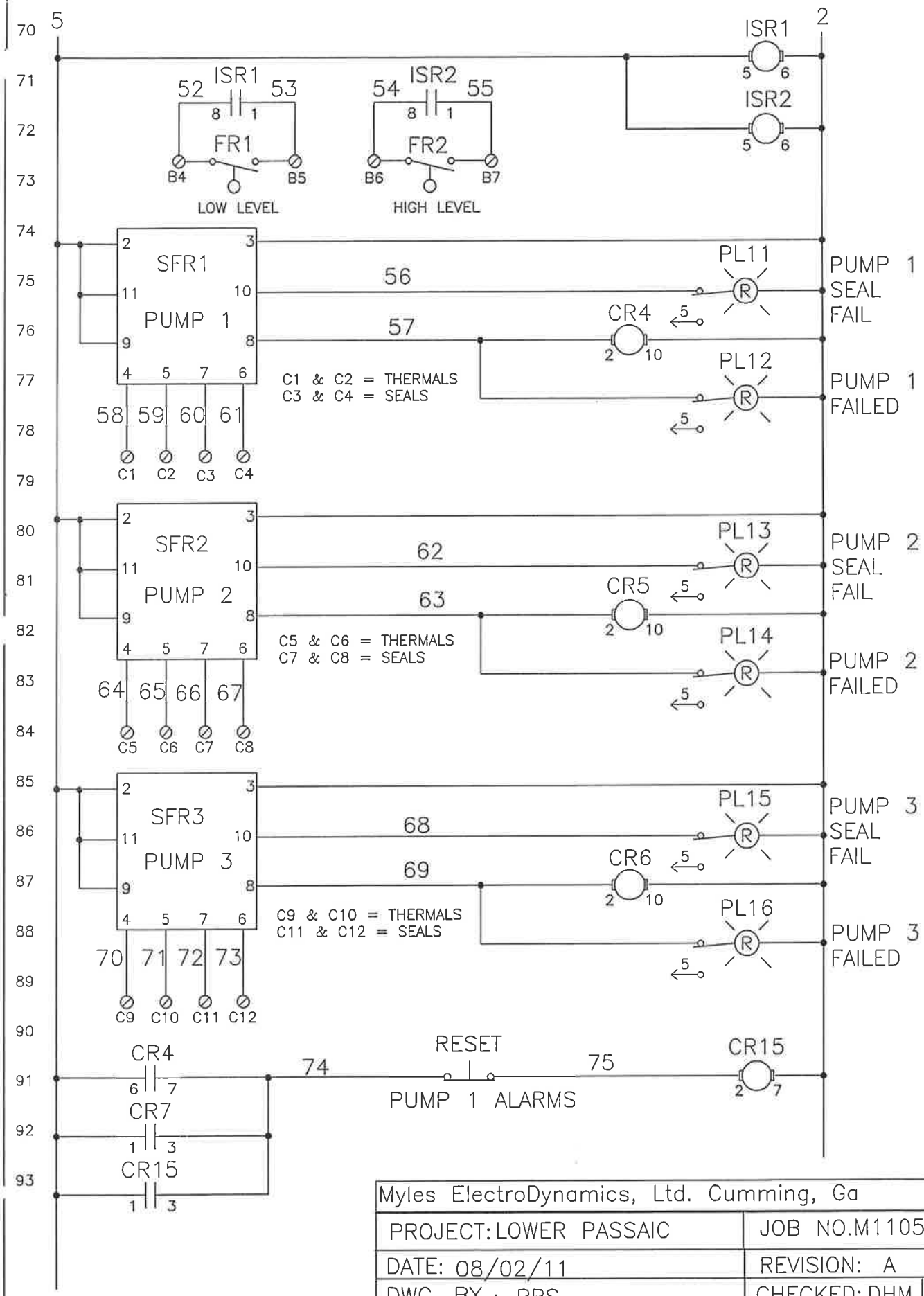


THIS DOCUMENT IS THE PROPRIETARY PROPERTY OF Myles ElectroDynamics, Ltd. IT HAS BEEN FURNISHED UPON THE CONDITION THAT IT SHALL NOT BE RELEASED, DUPLICATED, USED OR DISCLOSED IN WHOLE OR IN PART WITHOUT THE EXPRESSED WRITTEN PERMISSION OF Myles ElectroDynamics, LTD.

| | |
|---|---|
| Myles ElectroDynamics, Ltd. Cumming, Ga | |
| PROJECT: LOWER PASSAIC | JOB NO. M1105313 |
| DATE: 08/02/11 | REVISION: A |
| DWG. BY : RRS | CHECKED: DHM — DATE |

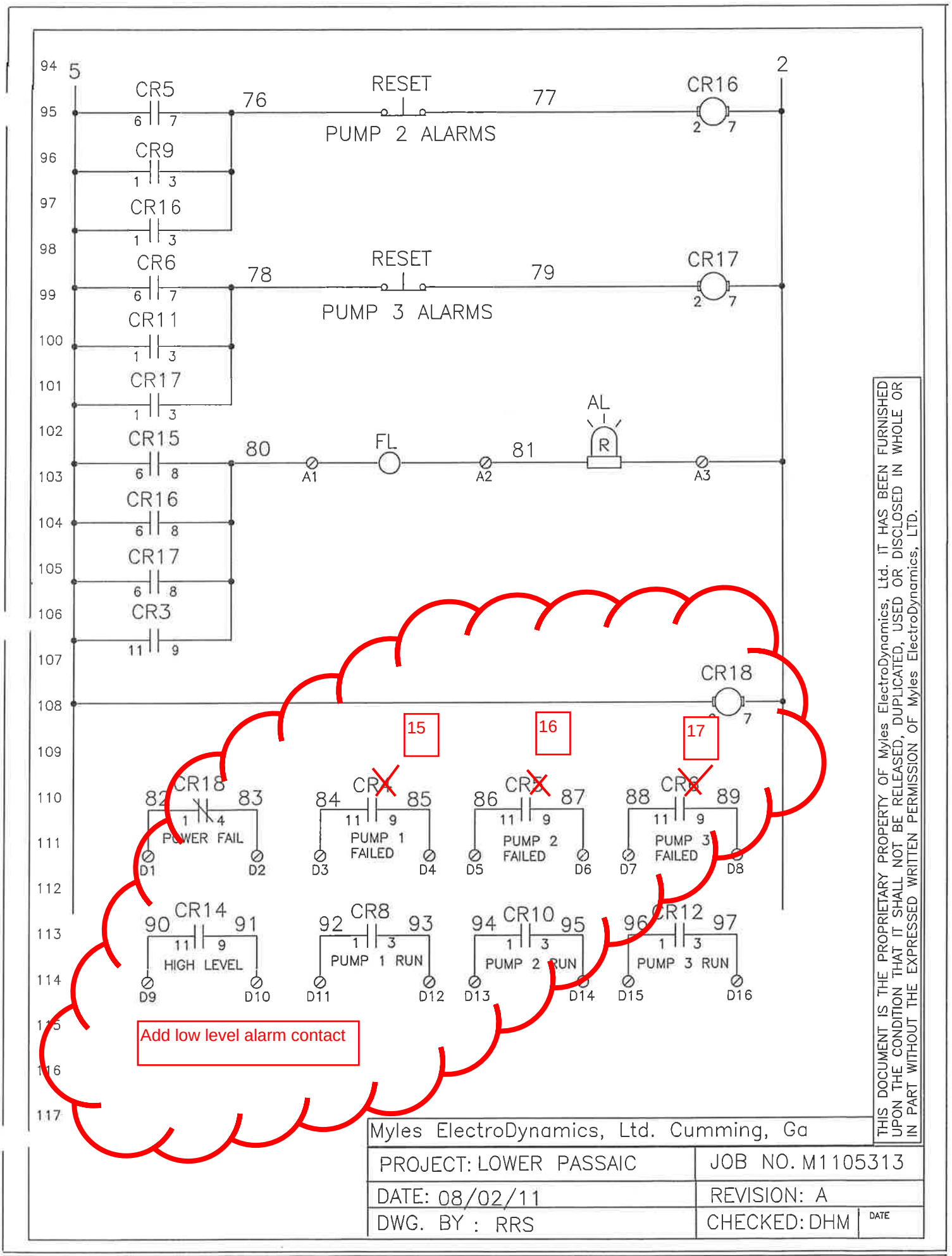


THIS DOCUMENT IS THE PROPRIETARY PROPERTY OF Myles ElectroDynamics, Ltd. IT HAS BEEN FURNISHED UPON THE CONDITION THAT IT SHALL NOT BE RELEASED, DUPLICATED, USED OR DISCLOSED IN WHOLE OR IN PART WITHOUT THE EXPRESSED WRITTEN PERMISSION OF Myles ElectroDynamics, LTD.

| | |
|---|---|
| Myles ElectroDynamics, Ltd. Cumming, Ga | |
| PROJECT: LOWER PASSAIC | JOB NO. M1105313 |
| DATE: 08/02/11 | REVISION: A |
| DWG. BY : RRS | CHECKED: DHM DATE |

# Type 4 and 12 Wall-Mount Disconnect Enclosures

## Disconnect Enclosure with Clamps, Type 4

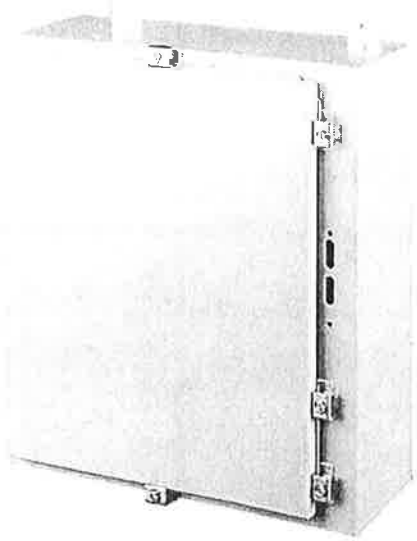

### Industry Standards

UL 508A Listed; Type 4, 12; File No. E61997
cUL Listed per CSA C22.2 No. 94; Type 4, 12; File No. E61997

NEMA/EEMAC Type 3, 4, 12, 13
CSA File No. 42186: Type 4, 12
IEC 60529, IP66

### Application

For disconnect applications in which a clamp-secured door is preferred. Clamps on three sides of the door keep liquid and contaminants out. Preferred cutout accepts major brand disconnect switches and circuit breakers.

### Furnished with Enclosures

1. Bracket welded to door for attaching disconnect door catch (interlock)
2. Instructions to locate and install disconnect switches, circuit breakers and operating mechanisms

### Specifications

- 14 gauge steel
- Seams continuously welded and ground smooth
- External mounting brackets
- External-formed flange around all sides of enclosure opening
- Stainless steel door clamps on three sides of door
- Removable door with continuous hinge
- Data pocket is high impact thermoplastic
- Type 4 rated door gasket
- Collar studs for mounting optional panels
- Holes in body for mounting disconnect operating handle and operating mechanism
- Bonding provision on door
- Bracket welded to door for attaching disconnect door catch (interlock) and instructions for installing disconnects

### Finish

ANSI 61 gray polyester powder coating inside and out.

### Accessories

*See also Accessories.*
Blank Adapter Plates, Mild Steel
Industrial Corrosion Inhibitors
Electric Heater
PANELITE™ Enclosure Lights Overview
Panels for Type 3R, 4, 4X, 12 and 13 Enclosures

### Modification and Customization

Hoffman excels at modifying and customizing products to your specifications. Contact your local Hoffman sales office or distributor for complete information.

Bulletin: A19

Standard Product

| Catalog Number | AxBxC in./mm | Panel | Conductive Panel | Panel Size DxE in./mm | Data Pocket Size in./mm | Number of Clamps |
|---|---|---|---|---|---|---|
| A24HS2108LP | 24.00 x 21.38 x 8.00<br>610 x 543 x 203 | A24P20 | A24P20G | 21.00 x 17.00<br>533 x 432 | 6.00 x 6.00<br>152 x 152 | 5 |
| A24HS2508LP | 24.00 x 25.38 x 8.00<br>610 x 645 x 203 | A24P24 | A24P24G | 21.00 x 21.00<br>533 x 533 | 6.00 x 6.00<br>152 x 152 | 5 |
| A30HS2508LP | 30.00 x 25.38 x 8.00<br>762 x 645 x 203 | A30P24 | A30P24G | 27.00 x 21.00<br>686 x 533 | 12.00 x 12.00<br>305 x 305 | 5 |
| A36HS2508LP | 36.00 x 25.38 x 8.00<br>914 x 645 x 203 | A36P24 | A36P24G | 33.00 x 21.00<br>838 x 533 | 12.00 x 12.00<br>305 x 305 | 5 |
| A36HS3108LP | 36.00 x 31.38 x 8.00<br>914 x 797 x 203 | A36P30 | A36P30G | 33.00 x 27.00<br>838 x 686 | 12.00 x 12.00<br>305 x 305 | 7 |
| A42HS3112LP | 42.00 x 31.38 x 12.00<br>1067 x 797 x 305 | A42P30 | A42P30G | 39.00 x 27.00<br>991 x 686 | 6.00 x 6.00<br>152 x 152 | 10 |
| A42HS3712LP | 42.00 x 37.38 x 12.00<br>1067 x 949 x 305 | A42P36 | A42P36G | 39.00 x 33.00<br>991 x 838 | 12.00 x 12.00<br>305 x 305 | 10 |
| A48HS3712LP | 48.00 x 37.38 x 12.00<br>1219 x 949 x 305 | A48P36 | A48P36G | 45.00 x 33.00<br>1143 x 838 | 12.00 x 12.00<br>305 x 305 | 10 |
| A60HS3712LP | 60.00 x 37.38 x 12.00<br>1524 x 949 x 305 | A60P36 | A60P36G | 57.00 x 33.00<br>1448 x 838 | 12.00 x 12.00<br>305 x 305 | 11 |

Purchase panels separately.


© 2011 Pentair Technical Products

# Type 4 and 12 Wall-Mount Disconnect Enclosures

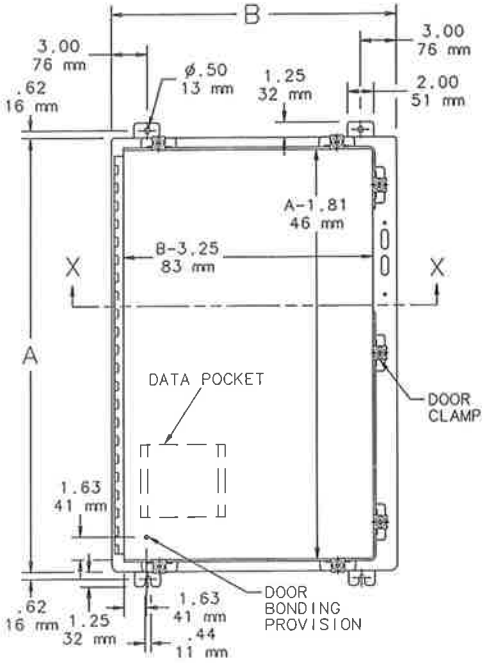


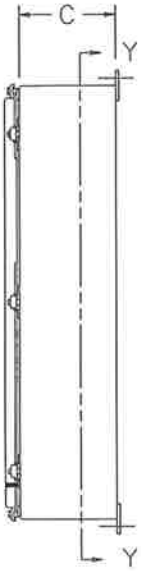


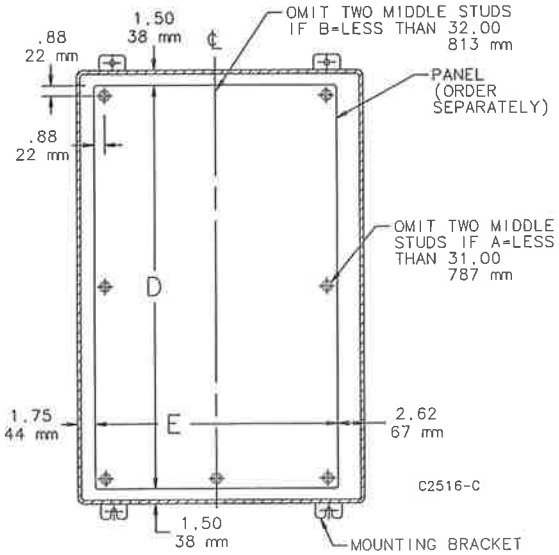


SECTION Y-Y

NOTE: 1. 12 gauge panels have flanges along two sides when the side dimension is more than 21.00 inches (533mm). Panels A24P20 and A24P24 have flanges on four sides.

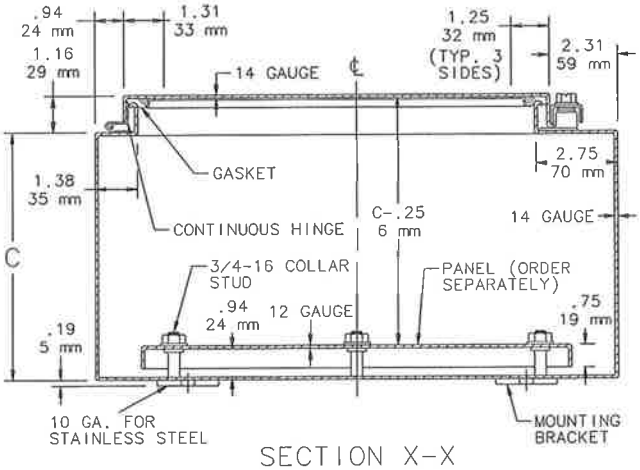


SECTION X-X

## Disconnect Mounting Space

Disconnects will occupy space on panel shown by dimensions E1, F1, and G1. Wiring space W1 is available when disconnect is installed in the enclosure.
E1 = 8.62 in. (219 mm) when C = 8.00 in. (203 mm)
E1 = 11.62 in. (294 mm) when C = 12.00 in. (305 mm)
W1 = Wiring Space

Refer to ***NATIONAL ELECTRICAL CODE, 2005*** article 430-10(b) for wiring space required for line side conductors to be connected to disconnect.

**Verify your application to determine whether wiring space is adequate.**

*Consult Space Occupied by Disconnect drawing to determine whether the disconnect device you are using will fit the enclosure size you have selected.*

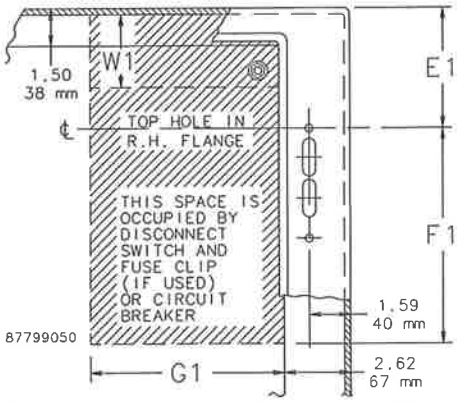


Consult disconnect manufacturer or see Disconnect Ordering Information at hoffmanonline.com under Technical Resources for F1 and G1 dimensions of various brands of disconnects.


© 2011 Pentair Technical Products

# Wall-Mount Preferred-Cutout Overview

## Preferred-Cutout Overview

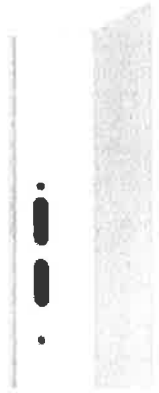

### Application

Enclosures having the preferred cutout are sized for use with up to 200A disconnect switches and up to 400A circuit breakers unless otherwise specified. The preferred cutout accepts the smaller operating handle whose mounting hole centers are 4.688 in. apart. Preferred cutouts are standard in mild steel wall-mount enclosures, modular enclosures and some select large mild steel enclosures. They are also present on all standard stainless steel offerings. Mild steel operator adapter plates with brand specific preferred cutouts are available for enclosures with a rectangular universal cutout.

Preferred cutouts are designed to house the following:

**Allen-Bradley**

- Bulletin 1494V disconnect switches with flange-mount variable-depth operating mechanisms and Bulletin 1494V flange-mount variable-depth operating mechanisms for circuit breakers
- Bulletin 140U flexible cable operating mechanisms for 140U molded case circuit breakers
- Bulletin 1494C cable-operated disconnect switches with flange-mount handles
- Bulletin 194RC cable-operated flange-mount handles for use with the NFPA 79 compliant 194R IEC rotary disconnect switches

*Allen-Bradley Bulletin 1494V-R1, -R2 and -W2 operating handles and Allen-Bradley Bulletin 1494F disconnect devices or Bulletin 1494D circuit breaker operators will NOT fit these enclosures.*

**ABB Controls** flange-mount variable-depth operating mechanisms for disconnect switches and circuit breakers. Also the cable version for circuit breakers.

**Eaton Cutler-Hammer** Type C361 flange-mount variable-depth operating mechanisms with disconnect switches and Type C371 flange-mount variable-depth operating mechanisms for circuit breakers.

**General Electric** Type STDA flange handles and variable-depth operating mechanisms for disconnect switches and circuit breakers. Also SPECTRAFLEX™ cable operators for circuit breakers.

**Siemens ITE** MAX FLEX® flange-mount variable-depth operating handles for circuit breakers.

**Schneider Square D®** Class 9422 disconnect switches with flange-mount variable-depth operating mechanisms or cable mechanisms and Class 9422 flange-mount variable-depth operating mechanisms or cable mechanisms for circuit breakers.
*These enclosures will NOT accept Square D Class 9422 bracket-mounted disconnect devices, Class 9422TG1 or TG2 devices.*

### Ordering

The disconnect switch, operating handle, and operating mechanism must be ordered from disconnect equipment supplier. See Technical Information in the Hoffman Specifier's Guide for wire bend space available when various manufacturers' disconnect switches are installed, or Disconnect Ordering Information at hoffmanonline.com for disconnect ordering guidelines and wire bend space available. Check the enclosure dimension drawings to verify the chosen disconnect switch will fit in the enclosure.


© 2011 Pentair Technical Products

# Wall-Mount Preferred-Cutout Overview

## Notes


© 2011 Pentair Technical Products

# Mounting Kits

## Floor Stand Kit

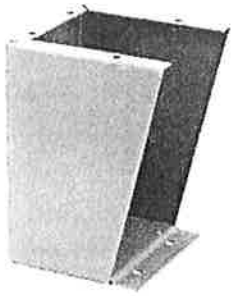

### Industry Standards

Product maintains UL/CSA Type 4, 4X (stainless steel only) and Type 12 when properly installed on Hoffman Type 4 or Type 12 enclosures.

### Application

Kits are easily installed on most wall-mount Hoffman enclosures. Can also be used to elevate Hoffman free-stand enclosures.

To install, drill holes in the bottom of the enclosure and bolt the floor stands to the enclosure.It is not necessary to remove the wall-mount brackets from the enclosure.

### Specifications

12 gauge steel floor stand has an ANSI 61 gray polyester powder finish over pretreated surfaces. Stainless steel floor stand is Type 304.

### Components

Each kit includes two stands. Two sets of floor stands are recommended for enclosures larger than double door free-stand enclosures.

### Ordering

Special heights, depths, materials and finishes can be provided on custom order. Consult factory for information.

Bulletin: A4SY, A80

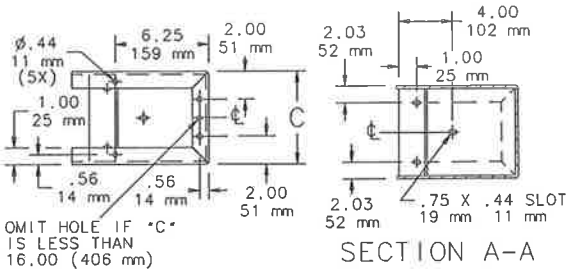


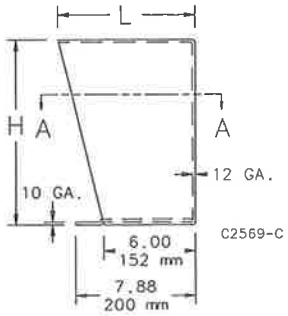


| Catalog Number | Material | Height, H (in.) | Height, H (mm) | Width, C (in.) | Width, C (mm) | L (in.) | L (mm) |
|---|---|---|---|---|---|---|---|
| AFK0608 | Steel | 6.00 | 152 | 8.06 | 205 | 7.06 | 179 |
| AFK0610 | Steel | 6.00 | 152 | 10.06 | 256 | 7.06 | 179 |
| AFK0612 | Steel | 6.00 | 152 | 12.06 | 306 | 7.06 | 179 |
| AFK0618 | Steel | 6.00 | 152 | 18.06 | 459 | 7.06 | 179 |
| AFK1208 | Steel | 12.00 | 305 | 8.06 | 205 | 8.12 | 206 |
| AFK1210 | Steel | 12.00 | 305 | 10.06 | 256 | 8.12 | 206 |
| AFK1212 | Steel | 12.00 | 305 | 12.06 | 306 | 8.12 | 206 |
| AFK1216 | Steel | 12.00 | 305 | 16.06 | 408 | 8.12 | 206 |
| AFK1218 | Steel | 12.00 | 305 | 18.13 | 461 | 8.12 | 206 |
| AFK1220 | Steel | 12.00 | 305 | 20.06 | 510 | 8.12 | 206 |
| AFK1808 | Steel | 18.00 | 457 | 8.06 | 205 | 9.17 | 233 |
| AFK1810 | Steel | 18.00 | 457 | 10.06 | 256 | 9.17 | 233 |
| AFK1812 | Steel | 18.00 | 457 | 12.06 | 306 | 9.17 | 233 |
| AFK1816 | Steel | 18.00 | 457 | 16.06 | 408 | 9.17 | 233 |
| AFK2408 | Steel | 24.00 | 610 | 8.06 | 205 | 10.23 | 260 |
| AFK2410 | Steel | 24.00 | 610 | 10.06 | 256 | 10.23 | 260 |
| AFK2412 | Steel | 24.00 | 610 | 12.06 | 306 | 10.23 | 260 |
| AFK2416 | Steel | 24.00 | 610 | 16.06 | 408 | 10.23 | 260 |
| AFK1208SS | Stainless Steel | 12.00 | 305 | 8.06 | 205 | 9.09 | 231 |
| AFK1210SS | Stainless Steel | 12.00 | 305 | 10.06 | 256 | 9.09 | 231 |
| AFK1212SS | Stainless Steel | 12.00 | 305 | 12.06 | 306 | 9.09 | 231 |
| AFK1216SS | Stainless Steel | 12.00 | 305 | 16.06 | 408 | 9.09 | 231 |
| AFK1218SS | Stainless Steel | 12.00 | 305 | 18.06 | 459 | 9.09 | 231 |
| AFK1224SS | Stainless Steel | 12.00 | 305 | 24.06 | 611 | 9.09 | 231 |
| AFK2410SS | Stainless Steel | 24.00 | 610 | 10.06 | 256 | 9.09 | 231 |
| AFK2412SS | Stainless Steel | 24.00 | 610 | 12.06 | 306 | 9.09 | 231 |


© 2011 Pentair Technical Products

Typical F-Frame Breaker
F-Frame Breaker with Electronic Trip Unit

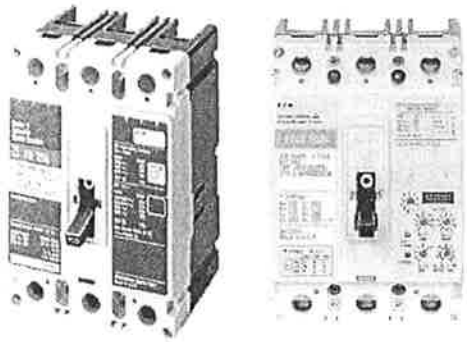

## Contents


| *Description* | *Page* |
|---|---|
| Product Overview | V4-T25-121 |
| Standards and Certifications | V4-T25-122 |
| Quick Reference | V4-T25-123 |
| G-Frame (15–100 Amperes) | V4-T25-127 |
| F-Frame (10–225 Amperes) | |
| Catalog Number Selection | V4-T25-142 |
| Product Selection | V4-T25-143 |
| Accessories | V4-T25-154 |
| Technical Data and Specifications | V4-T25-155 |
| Dimensions and Weights | V4-T25-157 |
| J-Frame (70–250 Amperes) | V4-T25-158 |
| K-Frame (70–400 Amperes) | V4-T25-166 |
| L-Frame (125–600 Amperes) | V4-T25-193 |
| M-Frame (300–800 Amperes) | V4-T25-219 |
| N-Frame (400–1200 Amperes) | V4-T25-230 |
| R-Frame (800–2500 Amperes) | V4-T25-258 |
| Motor Circuit Protectors (MCP) | V4-T25-282 |
| Motor Protection Circuit Breakers (MPCB) | V4-T25-289 |
| Type ELC Current Limiter Attachment (Size 0–4) | V4-T25-291 |
| Internal Accessories | V4-T25-296 |
| External Accessories | V4-T25-327 |


## F-Frame (10–225 Amperes)

### Product Description

- All Eaton's F-Frame circuit breakers are HACR rated
- All circuit breakers 10 through 30 amperes are suitable for HID (high intensity discharge) use
- All F-Frame circuit breakers are suitable for reverse feed use

## Type FD Thermal-Magnetic Circuit Breakers with Non-Interchangeable Trip Units (Includes Terminals on Load End Only)

| | 277 Vac Maximum, 125 Vdc<br>35 kAIC at 277 Vac | 600 Vac Maximum, 250 Vdc<br>35 kAIC at 480 Vac | | |
|---|---|---|---|---|
| | Single-Pole | Two-Pole | Three-Pole | Four-Pole |
| Maximum Continuous Ampere Rating at 40°C | Catalog Number | Catalog Number | Catalog Number | Catalog Number |
| 10 ① | FD1010 | — | — | — |
| 15 | FD1015 ② | FD2015 | FD3015 | FD4015 |
| 20 | FD1020 ② | FD2020 | FD3020 | FD4020 |
| 25 | FD1025 | FD2025 | FD3025 | FD4025 |
| 30 | FD1030 | FD2030 | FD3030 | FD4030 |
| 35 | FD1035 | FD2035 | FD3035 | FD4035 |
| 40 | FD1040 | FD2040 | FD3040 | FD4040 |
| 45 | FD1045 | FD2045 | FD3045 | FD4045 |
| 50 | FD1050 | FD2050 | FD3050 | FD4050 |
| 60 | FD1060 | FD2060 | FD3060 | FD4060 |
| 70 | FD1070 | FD2070 | FD3070 | FD4070 |
| 80 | FD1080 | FD2080 | FD3080 | FD4080 |
| 90 | FD1090 | FD2090 | FD3090 | FD4090 |
| 100 | FD1100 | FD2100 | FD3100 | FD4100 |
| 110 | FD1110 | FD2110 | FD3110 | FD4110 |
| 125 | FD1125 | FD2125 | FD3125 | FD4125 |
| 150 | FD1150 | FD2150 | FD3150 | FD4150 |
| 175 | — | FD2175 | FD3175 | FD4175 |
| 200 | — | FD2200 | FD3200 | FD4200 |
| 225 | — | FD2225 | FD3225 | FD4225 |

*Notes*

① Not UL listed. 5 kAIC interrupting rating.

② UL listed for SWD applications, see NEC Article 240-83(d).

SVX9000 Open Drives

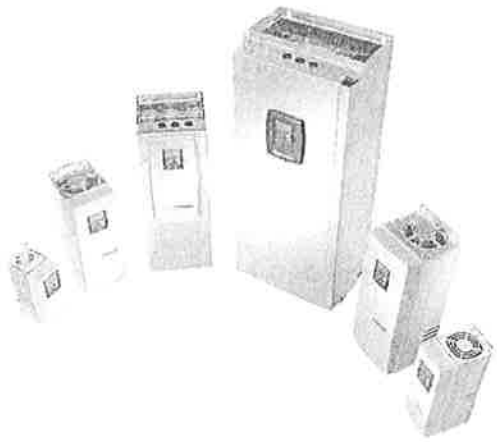

## Contents


| *Description* | *Page* |
|---|---|
| SVX9000 Open Drives | |
| Standards and Certifications | **V6-T36-18** |
| Catalog Number Selection | **V6-T36-18** |
| Product Selection | **V6-T36-19** |
| Accessories | **V6-T36-23** |
| Options | **V6-T36-24** |
| Replacement Parts | **V6-T36-27** |
| Technical Data and Specifications | **V6-T36-34** |
| Dimensions | **V6-T36-35** |
| SVX9000 Enclosed Drives | **V6-T36-52** |
| SVX9000 VFD Pump Panels | **V6-T36-78** |


## SVX9000 Open Drives

### Product Description

SVX9000 Series Adjustable Frequency Drives from Eaton's electrical sector are the next generation of drives specifically engineered for today's commercial and industrial applications. The power unit makes use of the most sophisticated semiconductor technology and a highly modular construction that can be flexibly adapted to the customer's needs.

The input and output configuration (I/O) is designed with modularity in mind. The I/O is compromised of option cards, each with its own input and output configuration. The control module is designed to accept a total of five of these cards. The cards contain not only normal analog and digital inputs but also fieldbus cards.

These drives continue the tradition of robust performance, and raise the bar on features and functionality, ensuring the best solution at the right price.

### Features

- Robust design—proven 500,000 hours MTBF
- Integrated 3% line reactors standard on drives from FR4 through FR9
- EMI/RFI Filters H standard up to 200 hp $I_H$ 480V, 100 hp $I_H$ 230V
- Simplified operating menu allows for typical programming changes, while programming mode provides control of everything
- Quick Start Wizard built into the programming of the drive ensures a smooth start-up
- Keypad can display up to three monitored parameters simultaneously
- LOCAL/REMOTE operation from keypad
- Copy/paste function allows transfer of parameter settings from one drive to the next
- Standard NEMA Type 12/IP54 keypad on all drives
- The SVX can be flexibly adapted to a variety of needs using our pre-installed "Seven in One" precision application programs consisting of:
  - Basic
  - Standard
  - Local/remote
  - Multi step speed control
  - PID control
  - Multi-purpose control
  - Pump and fan control with auto change
- Additional I/O and communication cards provide plug and play functionality
- I/O connections with simple quick connection terminals
- Hand-held auxiliary 24V power supply allows programming/monitoring of control module without applying full power to the drive
- Control logic can be powered from an external auxiliary control panel, internal drive functions and fieldbus if necessary
- Brake chopper standard from: 1–30 hp/380–500V 3/4–15 hp/208–230V
- NEMA Type 1/IP21 and NEMA Type 12/IP54 enclosures available, Frame Sizes FR4–FR9
- Open chassis FR10 and greater
- Standard option board configuration includes an A9 I/O board and an A2 relay output board installed in slots A and B

### *480V SVX9000 Drives*

**SVX9000 Open Drives**

## 380–500V, NEMA Type 1/IP21 Drives

| Frame Size | Delivery Code | hp ($I_H$) | Current ($I_H$) | hp ($I_L$) | Current ($I_L$) | Catalog Number |
|---|---|---|---|---|---|---|
| FR4 | W | 1 | 2.2 | 1-1/2 | 3.3 | SVX001A1-4A1B1 |
| | | 1-1/2 | 3.3 | 2 | 4.3 | SVXF15A1-4A1B1 |
| | | 2 | 4.3 | 3 | 5.6 | SVX002A1-4A1B1 |
| | | 3 | 5.6 | 5 | 7.6 | SVX003A1-4A1B1 |
| | | 5 | 7.6 | — | 9 | SVX005A1-4A1B1 |
| | | — | 9 | 7-1/2 | 12 | SVX006A1-4A1B1 |
| FR5 | W | 7-1/2 | 12 | 10 | 16 | SVX007A1-4A1B1 |
| | | 10 | 16 | 15 | 23 | SVX010A1-4A1B1 |
| | | 15 | 23 | 20 | 31 | SVX015A1-4A1B1 |
| FR6 | W | 20 | 31 | 25 | 38 | SVX020A1-4A1B1 |
| | | 25 | 38 | 30 | 46 | SVX025A1-4A1B1 |
| | | 30 | 46 | 40 | 61 | SVX030A1-4A1B1 |
| FR7 | W | 40 | 61 | 50 | 72 | SVX040A1-4A1N1 |
| | | 50 | 72 | 60 | 87 | SVX050A1-4A1N1 |
| | | 60 | 87 | 75 | 105 | SVX060A1-4A1N1 |
| FR8 | W | 75 | 105 | 100 | 140 | SVX075A1-4A1N1 |
| | | 100 | 140 | 125 | 170 | SVX100A1-4A1N1 |
| | | 125 | 170 | 150 | 205 | SVX125A1-4A1N1 |
| FR9 | W | 150 | 205 | 200 | 261 | SVX150A1-4A1N1 |
| | | 200 | 245 | 250 | 300 | SVX200A1-4A1N1 |

## 380–500V, NEMA Type 12/IP54 Drives

| Frame Size | Delivery Code | hp ($I_H$) | Current ($I_H$) | hp ($I_L$) | Current ($I_L$) | Catalog Number |
|---|---|---|---|---|---|---|
| FR4 | F1 | 1 | 2.2 | 1-1/2 | 3.3 | SVX001A2-4A1B1 |
| | | 1-1/2 | 3.3 | 2 | 4.3 | SVXF15A2-4A1B1 |
| | | 2 | 4.3 | 3 | 5.6 | SVX002A2-4A1B1 |
| | | 3 | 5.6 | 5 | 7.6 | SVX003A2-4A1B1 |
| | | 5 | 7.6 | — | 9 | SVX005A2-4A1B1 |
| | | — | 9 | 7-1/2 | 12 | SVX006A2-4A1B1 |
| FR5 | F1 | 7-1/2 | 12 | 10 | 16 | SVX007A2-4A1B1 |
| | | 10 | 16 | 15 | 23 | SVX010A2-4A1B1 |
| | | 15 | 23 | 20 | 31 | SVX015A2-4A1B1 |
| FR6 | F1 | 20 | 31 | 25 | 38 | SVX020A2-4A1B1 |
| | | 25 | 38 | 30 | 46 | SVX025A2-4A1B1 |
| | | 30 | 46 | 40 | 61 | SVX030A2-4A1B1 |
| FR7 | W | 40 | 61 | 50 | 72 | SVX040A2-4A1N1 |
| | | 50 | 72 | 60 | 87 | SVX050A2-4A1N1 |
| | | 60 | 87 | 75 | 105 | SVX060A2-4A1N1 |
| FR8 | W | 75 | 105 | 100 | 140 | SVX075A2-4A1N1 |
| | | 100 | 140 | 125 | 170 | SVX100A2-4A1N1 |
| | | 125 | 170 | 150 | 205 | SVX125A2-4A1N1 |
| FR9 | W | 150 | 205 | 200 | 261 | SVX150A2-4A1N1 |
| | | 200 | 245 | 250 | 300 | SVX200A2-4A1N1 |

## Motor Circuit Protectors

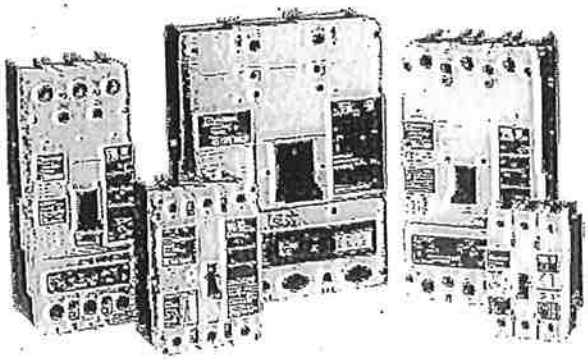

*Motor Circuit Protectors*

## Product Description

Designated as Eaton's Cutler-Hammer Types GMCP and HMCP, the instantaneous-only Motor Circuit Protector (MCP) is available in ratings from 3 A to 1200 A for motor starter sizes 0 through 8. The MCP is designed to comply with the applicable requirements of Underwriters Laboratories Standard UL 489, Canadian Standards Association Standard C22.2 No. 5.1, and International Electrotechnical Commission Recommendations IEC 157-1.

An innovative design of internal components allows higher MCP-starter combination interrupting ratings. The MCP is marked to permit proper electrical application within the assigned equipment ratings.

The MCP is a recognized component (UL File E7819) and complies with the applicable requirements of Underwriters Laboratories Standard UL 489. It is also designed to comply with the applicable requirements of Canadian Standards Association Standard C22.2 No. 5.1, International Electrotechnical Commission Recommendations IEC 157-1, and nameplates bear the CE marking.

Note: Interrupting ratings are dependent on starter it is used with.

# Product Selection

## G-Frame

Table 45-471. 480 Vac Maximum, 600Y/347 Vac

| NEMA Starter Size | Cont. Amps | Cam Setting | Motor Full Load Current Amperes (FLA) ① | MCP Trip Setting | MCP Catalog Number | Price U.S. $ |
|---|---|---|---|---|---|---|
| 0 | 3 | A | 1.1 – 1.2 | 15 | GMCP003A0C | |
| | | B | 1.3 – 1.5 | 18 | | |
| | | C | 1.6 – 1.7 | 21 | | |
| | | D | 1.8 – 1.9 | 24 | | |
| | | E | 2.0 – 2.2 | 27 | | |
| | | F | 2.3 – 2.5 | 30 | | |
| 0 | 7 | A | 2.6 – 3.1 | 35 | GMCP007C0C | |
| | | B | 3.2 – 3.6 | 42 | | |
| | | C | 3.7 – 3.9 | 49 | | |
| | | D | 4.3 – 4.7 | 56 | | |
| | | E | 4.8 – 5.2 | 63 | | |
| | | F | 5.3 – 5.7 | 70 | | |
| 0 | 15 | A | 5.7 – 6.8 | 75 | GMCP015E0C | |
| | | B | 6.9 – 7.9 | 90 | | |
| | | C | 8.0 – 9.1 | 105 | | |
| | | D | 9.2 – 10.3 | 120 | | |
| | | E | 10.4 – 11.4 | 135 | | |
| | | F | 11.5 – 12.6 | 150 | | |
| 1 | 30 | A | 11.5 – 13.7 | 150 | GMCP030H1C | |
| | | B | 13.8 – 16.0 | 180 | | |
| | | C | 16.1 – 18.3 | 210 | | |
| | | D | 18.4 – 20.6 | 240 | | |
| | | E | 20.7 – 22.9 | 270 | | |
| | | F | 23.0 – 25.2 | 300 | | |
| 2 | 50 | A | 19.3 – 22.9 | 250 | GMCP050K2C | |
| | | B | 23.0 – 26.8 | 300 | | |
| | | C | 26.9 – 30.6 | 350 | | |
| | | D | 30.7 – 34.5 | 400 | | |
| | | E | 34.6 – 38.3 | 450 | | |
| | | F | 38.4 – 42.1 | 500 | | |
| 3 | 60 | A | 23.1 – 27.5 | 300 | GMCP060J2C | |
| | | B | 27.7 – 32.2 | 360 | | |
| | | C | 32.3 – 36.7 | 420 | | |
| | | D | 36.9 – 41.4 | 480 | | |
| | | E | 41.5 – 46.0 | 540 | | |
| | | F | 46.2 – 50.5 | 600 | | |
| 3 | 63 | A | 24.2 – 32.1 | 320 | GMCP063M2C | |
| | | B | 29.1 – 34.8 | 380 | | |
| | | C | 33.9 – 39.4 | 440 | | |
| | | D | 38.8 – 46.4 | 500 | | |
| | | E | 43.6 – 48.9 | 570 | | |
| | | F | 48.5 – 53.7 | 630 | | |

① Motor FLA ranges are typical. The corresponding trip setting is at 13 x the minimum FLA value shown. Where a 13 x setting is required for an intermediate FLA value, alternate Cam settings and/or MCP ratings should be used.

Note: All GMCP 3 – 63 A come with line and load steel body terminals for Cu only wire. Refer to Table 45-120 on Page 45-70 under Optional Terminal Types.

Note: UL recognized and CSA approved.



Discount Symbol ..... CB-2

## Cable-In/Cable-Out, 1/2 Wide Types QCR, QCF, QCRH, QCFH

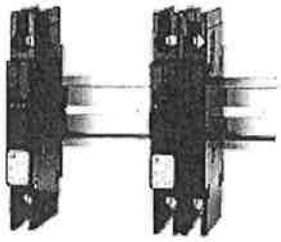

*1-Pole* *2-Pole*

*QCR (Rear-Mounted Breakers)*

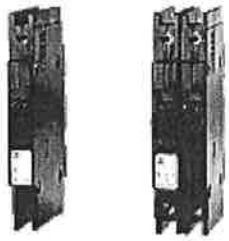

*1-Pole* *2-Pole*

*QCF (Front-Mounted Breakers)*

### Product Description

Type QCR have as a standard feature provisions for 35 mm DIN rail rear mounting with a spring-loaded release. Optional clips for individual mounting are available as a separate accessory.

Type QCF have two threaded steel inserts to facilitate front mounting with #6 – 32 steel screws. The clamp type terminals are accessible from the rear of the breaker so that cables can be accessed without removal of the breaker from the front cover.

### Application Description

QCR and QCF circuit breakers are only 1/2-inch (12.7 mm) wide per pole and are excellent for general purpose industrial applications where space savings is required.

### Features, Benefits and Functions

- 1/2-inch (12.7 mm) wide per pole
- Cable-in/cable-out
- Black cases with black handles
- Three position handle: ON, Tripped (center), OFF
- Thermal-magnetic protection
- One-, two- and three-pole
- 10 kAIC at 120/240V AC, 10 – 60 amperes
- 22 kAIC at 120/240V AC, 15 – 20 amperes
- 10 kAIC at 240V AC, 10 – 30 amperes
- 3 kAIC at 62.5V DC (1-pole)
- 3 kAIC at 130V DC (2 poles in series)
- Normal operating environment:
  - 0 – 40°C
  - 5 – 95% humidity (non-condensating)

### Standards and Certifications

- Built and Listed to UL 489
- UL File E7819
- CSA File LR48907
- Type QCR and QCF circuit breakers are UL listed circuit breakers that are suitable for use as branch circuit protectors
- All ratings 15 – 60A are HACR rated

### Instruction Leaflets

- Instructions for QCRLOFF Padlock Bracket for Types QCR and QCF Breakers: FRED 6621023

Time/Current Curves

- 1-Pole: FRED 350077
- 2-Pole: FRED 350177
- 3-Pole: FRED 350277

Dimension Sheets

- FRED Index 206

### Options and Accessories

QCR and QCF Standard Box Terminals

Factory installed line and load side breaker terminal to accommodate 14 AWG to 4 AWG wire.

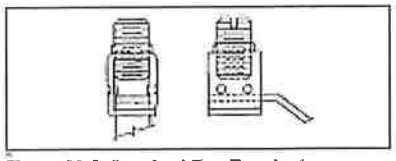

Figure 11-3. Standard Box Terminals

QCR Quick-Connect Terminals

Factory installed two-prong quick-connect terminal on breaker load side suitable for terminating two 10 AWG wire with insulated slip-on terminals as shown. Line side terminal is the standard type.

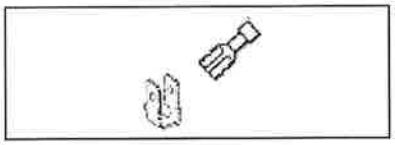

Figure 11-4. Catalog Suffix "P"

QCR and QCF Ring or Spade Lug Terminals (10 to 30 ampere ratings only)

Factory installed line and load side terminals each equipped with a #10 – 32 screw suitable for terminating one 10 AWG wire with insulated ring or spade type terminal as shown.

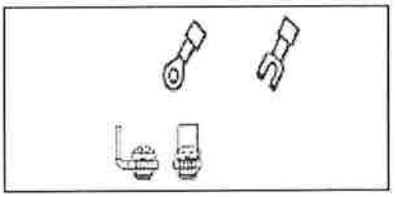

Figure 11-5. Catalog Suffix "T"

Table 11-12. Available QCR and QCF Breaker Accessories

| Description | Catalog Number | Price U.S. $ |
|---|---|---|
| Steel mounting clip mounts QCR breaker if individual mounting is required. Quantity two required for 1- and 2-pole and four required for 3-pole breakers. | QCRMTGFT | .62 |
| Removable padlock device for single-pole QCR or QCF breaker. | QCRFPL1P | 19.80 |
| Removable padlock device for multi-pole QCR or QCF breaker. | QCRFPLMP | 19.00 |
| Padlock bracket assembly for QCR or QCF single- or multi-pole breakers (OFF only). | QCRFLOFF | 24.50 |

## Product Selection

Table 11-13. QCR Breaker Catalog Numbers ①②③④

| Continuous Ampere Rating @ 40°C | 120/240V AC | | 120/240V AC | | 240V AC⑧ | | | |
|---|---|---|---|---|---|---|---|---|
| | 1-Pole | | 2-Pole | | 2-Pole | | 3-Pole | |
| | Catalog Number | Price U.S. $ | Catalog Number | Price U.S. $ | Catalog Number | Price U.S. $ | Catalog Number | Price U.S. $ |
| **QCR Breaker 10 kAIC Interruption Ratings** | | | | | | | | |
| 10 | QCR1010<br>QCR1010T<br>— | 27.50<br>33.50<br>— | QCR2010<br>QCR2010T<br>QCR2010P | 60.50<br>74.50<br>73.50 | —<br>—<br>— | —<br>—<br>— | —<br>—<br>— | —<br>—<br>— |
| 15 | QCR1015⑨<br>QCR1015T⑨<br>— | 27.50<br>33.50<br>— | QCR2015<br>QCR2015T<br>QCR2015P | 60.50<br>74.50<br>73.50 | QCR2015H<br>QCR2015HT<br>— | 156.00<br>180.00<br>— | QCR3015H<br>QCR3015HT<br>— | 194.00<br>224.00<br>— |
| 20 | QCR1020⑨<br>QCR1020T⑨<br>— | 27.50<br>33.50<br>— | QCR2020<br>QCR2020T<br>QCR2020P | 60.50<br>74.50<br>73.50 | QCR2020H<br>QCR2020HT<br>— | 156.00<br>180.00<br>— | QCR3020H<br>QCR3020HT<br>— | 194.00<br>224.00<br>— |
| 25 | QCR1025<br>QCR1025T<br>— | 27.50<br>33.50<br>— | QCR2025<br>QCR2025T<br>QCR2025P | 60.50<br>74.50<br>73.50 | QCR2025H<br>QCR2025HT<br>— | 156.00<br>180.00<br>— | QCR3025H<br>QCR3025HT<br>— | 184.00<br>225.00<br>— |
| 30 | QCR1030<br>QCR1030T<br>— | 27.50<br>33.50<br>— | QCR2030<br>QCR2030T<br>QCR2030P | 60.50<br>74.50<br>73.50 | QCR2030H<br>QCR2030HT<br>— | 156.00<br>180.00<br>— | QCR3030H<br>QCR3030HT<br>— | 194.00<br>224.00<br>— |
| 35 | QCR1035<br>— | 27.50<br>— | QCR2035<br>QCR2035P | 60.50<br>73.50 | —<br>— | —<br>— | —<br>— | —<br>— |
| 40 | QCR1040<br>— | 27.50<br>— | QCR2040<br>QCR2040P | 60.50<br>73.50 | —<br>— | —<br>— | —<br>— | —<br>— |
| 45 | QCR1045<br>— | 27.50<br>— | QCR2045<br>QCR2045P | 60.50<br>73.50 | —<br>— | —<br>— | —<br>— | —<br>— |
| 50 | QCR1050<br>— | 27.50<br>— | QCR2050<br>QCR2050P | 60.50<br>73.50 | —<br>— | —<br>— | —<br>— | —<br>— |
| 55 | QCR1055<br>— | 27.50<br>— | QCR2055<br>QCR2055P | 60.50<br>73.50 | —<br>— | —<br>— | —<br>— | —<br>— |
| 60⑦ | QCR1060<br>— | 27.50<br>— | QCR2060<br>QCR2060P | 60.50<br>73.50 | —<br>— | —<br>— | —<br>— | —<br>— |
| **QCR Breaker 22 kAIC Interruption Ratings** | | | | | | | | |
| 15 | QCRH1015⑨<br>QCRH1015T⑨ | 60.00<br>60.00 | QCRH2015<br>QCRH2015T | 128.00<br>128.00 | —<br>— | —<br>— | —<br>— | —<br>— |
| 20 | QCRH1020⑨<br>QCRH1020T⑨ | 60.00<br>60.00 | QCRH2020<br>QCRH2020T | 128.00<br>128.00 | —<br>— | —<br>— | —<br>— | —<br>— |

① Standard breaker terminals are box type lugs.
② Breakers with T Catalog Number Suffix are suitable for line and load side ring terminal connection (#10-32 plus/minus terminal screw provided).
③ Breakers with P Catalog Number Suffix are suitable for terminating two 10 AWG Quick-Connect Type Terminals per phase on breaker load side.
④ Breakers with Shunt Trip Attachment (extra pole required on breaker right-hand side) are available. Contact the Customer Support Center.
⑥ Breakers with H Catalog Suffix have 240V AC construction.
⑨ All 15 and 20 ampere single-pole breakers are SWD (Switching Duty) rated for fluorescent lighting applications.
⑦ 60/75°C Cu/Al wire on all ratings except 60 amperes which requires Cu only conductor.

# CUTLER-HAMMER (E34VHBK1-Y1 & E34VTBK1-23X) 30.5MM SELECTOR SWITCHES HEAVY-DUTY WATERTIGHT/OILTIGHT

## Selector Switch Units

- Two-, Three- and Four-Position — Maintained
- Non-illuminated and Illuminated

*2-Position Maintained Switch*

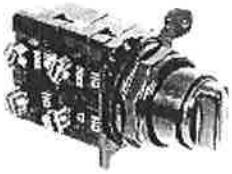

*4-Position Maintained Switch*

**Table 47-315. 2-Position Selector Switch — UL (NEMA) 3, 3R, 4, 4X, 12, 13**

| Operator Position ① | | Operator Action ② | Non-illuminated | | Price U.S. $ | Illuminated — 120V Transformer | | Price U.S. $ | Contact Type | Mounting Location | | Cam Code |
|---|---|---|---|---|---|---|---|---|---|---|---|---|
| | | | Black Knob ③ | Black Lever ③ | | Red Knob ③ | Red Lever ③ | | | | | |
| | | | Catalog Number | Catalog Number | | Catalog Number | Catalog Number | | | A | B | |
| X<br>O | O<br>X | M M | E34VFBK1-X1 | E34VFBL1-X1 | 45.25 | E34VFB120ER-1X | E34VFB120FR-1X | 99.35 | 1NC<br>1NO | | | 1 |

① X = closed circuit, O = open circuit.
② M = Maintained.
③ To order different type or color selector switch, substitute the underlined character with appropriate Suffix Code from the Color Selection table. Example: E34VFBK2-X1.

**Table 47-316. 3-Position Selector Switch — UL (NEMA) 3, 3R, 4, 4X, 12, 13**

| Operator Position ④ | | | Operator Action ⑤ | Non-illuminated | | Price U.S. $ | Illuminated — 120V Transformer | | Price U.S. $ | Contact Type | Mounting Location | | Cam Code |
|---|---|---|---|---|---|---|---|---|---|---|---|---|---|
| | | | | Black Knob ⑥ | Black Lever ⑥ | | Red Knob ⑥ | Red Lever ⑥ | | | | | |
| | | | | Catalog Number | Catalog Number | | Catalog Number | Catalog Number | | | A | B | |
| X<br>O | O<br>O | O<br>X | | E34VHBK1-Y1 | E34VHBL1-Y1 | 45.25 | E34VHB120TER-2X | E34VHB120TFR-2X | 99.35 | 1NO<br>1NO | | | 3 |
| X<br>O<br>O | O<br>X<br>O | O<br>O<br>X | M<br>M M | E34VHBK1-Y2 | E34VHBL1-Y2 | 79.00 | E34VHB120TER-23X | E34VHB120TFR-23X | 119.45 | 1NO<br>2NC (Series)<br>1NO | | | 3 |

④ X = closed circuit, O = open circuit.
⑤ M = Maintained.
⑥ To order different type or color selector switch, substitute the underlined character with appropriate Suffix Code from the Color Selection table. Example: E34VFBK2-X1.

**Table 47-317. 4-Position Selector Switch — UL (NEMA) 3, 3R, 4, 4X, 12, 13**

| Operator Position ⑦ | | | | Operator Action ⑧ | Non-illuminated | | Price U.S. $ | Illuminated — 120V Transformer | | Price U.S. $ | Contact Type | Mounting Location | | Cam Code |
|---|---|---|---|---|---|---|---|---|---|---|---|---|---|---|
| | | | | | Black Knob ⑨ | Black Lever ⑨ | | Red Knob ⑨ | Red Lever ⑨ | | | | | |
| | | | | | Catalog Number | Catalog Number | | Catalog Number | Catalog Number | | | A | B | |
| X<br>O<br>O<br>O | O<br>X<br>O<br>O | O<br>O<br>X<br>O | O<br>O<br>O<br>X | M M<br>M M | E34VTBK1-Z1 | E34VTBL1-Z1 | 79.00 | E34VRB120TER-23X | E34VRB120TFR-23X | 119.45 | 1NC<br>1NO<br>1NO<br>1NC | | | 7 |

⑦ X = closed circuit, O = open circuit.
⑧ M = Maintained.
⑨ To order different type or color selector switch, substitute the underlined character with appropriate Suffix Code from the Color Selection table. Example: E34VFBK2-X1.

**Table 47-318. Color Selection, Non-illuminated**

| Color | Code Letter |
|---|---|
| Black | 1 |
| Red | 2 |
| Green | 3 |
| Yellow | 4 |
| White | 5 |
| Blue | 6 |
| Gray | 7 |
| Orange | 8 |

**Note:** For Light Unit Voltage Suffix and Knobs, Levers tables, see **Page 47-192.**

**Note:** Use NEMA 4X 10250T operators where exposed to ultraviolet light, see **Pages 47-123 – 47-173.**


Accessories ..... **Pages 47-197 – 47-198**
Additional Circuit Arrangements ..... **Pages 47-189 – 47-190**
Dimensions ..... **Page 47-200**
Enclosures ..... **Pages 47-195 – 47-196**
Legend Plates ..... **Page 47-194**
Discount Symbol ..... **1CD1C**

# CUTLER HAMMER
## (P/N: E22T3X26, E22T2X26 & E22T9X26)

# E22T SERIES – 22.5MM PUSH BUTTON HEAVY DUTY WATERTIGHT/OIL TIGHT

### Indicating Light Units — Modular

- Standard and PresTest Types
- Full Voltage LED Light Units or
- Full Voltage, Resistor or Transformer Incandescent Light Units
- Plastic Lenses

PresTest — This device incorporates a press-to-test feature whereby depressing the lens disconnects the light from the source being monitored and connects the lamp to a continuously energized circuit for immediate test for a faulty lamp.

*24V Full Voltage Indicating Light*

*120V Resistor Indicating Light*

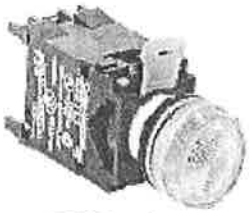

*120V Transformer Indicating Light*

**Table 47-35. Indicating and PresTest Light Units — UL (NEMA) 3, 3R, 4, 4X, 12, 13**

| Lamp | Type | Voltage | Color | Indicating Light | | PresTest | | LED/Lamp Number |
|---|---|---|---|---|---|---|---|---|
| | | | | Catalog Number | Price U.S. $ | Catalog Number | Price U.S. $ | |
| LED | Full Voltage | 24V AC/DC | Red | E22H2X40 | 48.00 | — | — | Bayonet Base |
| | | | Green | E22H3X41 | 48.00 | — | — | |
| | | | White | E22H5X90 | 48.00 | — | — | |
| | | | Blue | E22H6X52 | 48.00 | — | — | |
| | | | Amber | E22H9X95 | 48.00 | — | — | |
| | | | Clear | E22H0X90 | 48.00 | — | — | |
| | | 120V AC | Red | E22H2X43 | 48.00 | — | — | |
| | | | Green | E22H3X44 | 48.00 | — | — | |
| | | | White | E22H5X92 | 48.00 | — | — | |
| | | | Blue | E22H6X61 | 48.00 | — | — | |
| | | | Amber | E22H9X96 | 48.00 | — | — | |
| | | | Clear | E22H0X92 | 48.00 | — | — | |
| Incandescent | Full Voltage | 24V AC/DC | Red | E22H2X4 | 32.00 | E22T2X20 | 57.50 | #1819 |
| | | | Green | E22H3X4 | 32.00 | E22T3X20 | 57.50 | |
| | | | White | E22H5X4 | 32.00 | E22T5X20 | 57.50 | |
| | | | Blue | E22H6X4 | 32.00 | E22T6X20 | 57.50 | |
| | | | Amber | E22H9X4 | 32.00 | E22T9X20 | 57.50 | |
| | | | Clear | E22H0X4 | 32.00 | E22T0X20 | 57.50 | |
| | Resistor | 120V AC/DC | Red | E22H2X10 | 32.00 | E22T2X26 | 57.50 | W1226 |
| | | | Green | E22H3X10 | 32.00 | E22T3X26 | 57.50 | |
| | | | White | E22H5X10 | 32.00 | E22T5X26 | 57.50 | |
| | | | Blue | E22H6X10 | 32.00 | E22T6X26 | 57.50 | |
| | | | Amber | E22H9X10 | 32.00 | E22T9X26 | 57.50 | |
| | | | Clear | E22H0X10 | 32.00 | E22T0X26 | 57.50 | |
| | Transformer | 120V AC | Red | E22H2X11 | 48.00 | E22T2X27 | 73.00 | #755 |
| | | | Green | E22H3X11 | 48.00 | E22T3X27 | 73.00 | |
| | | | White | E22H5X11 | 48.00 | E22T5X27 | 73.00 | |
| | | | Blue | E22H6X11 | 48.00 | E22T6X27 | 73.00 | |
| | | | Amber | E22H9X11 | 48.00 | E22T9X27 | 73.00 | |
| | | | Clear | E22H0X11 | 48.00 | E22T0X27 | 73.00 | |

Note: Dimensions are listed with components.

## Handle Mechanisms Overview

Handle Mechanisms are used to operate molded case circuit breakers, molded case switches and motor circuit protectors. They are available in three basic configurations — Flange Mounted, Through-the-Door and Direct (Close-Coupled) — providing safe, dependable operation and ease of installation.

- Flange Mounted:
  - Flex Shaft
  - C371
- Through-the-Door:
  - Series C Rotary
  - Universal Rotary
- Direct (Close-Coupled):
  - Universal Direct
  - Euro IEC
  - G Direct

Handle mechanisms are typically used on enclosed circuit breakers, control panels and motor control centers in many different applications. Eaton's Cutler-Hammer has a handle mechanism for virtually any need.

## Flange Mounted Handle Mechanisms

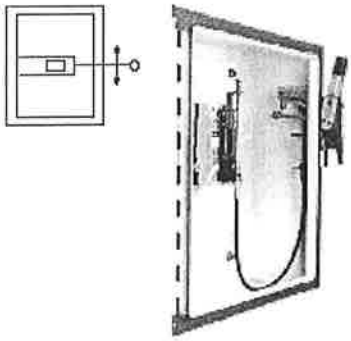

*Flex Shaft™*

## Product Description

Flange Mounted Handle Mechanisms mount on the flange of an enclosure door. The Flex Shaft™ is an extra heavy-duty mechanism that includes a flexible shaft in various lengths, 3 feet (.9 m) through 10 feet (3 m) for use with various size enclosures.

The Flex Shaft Handle will accept up to three padlock shackles, each with a maximum diameter of 3/8-inch (9.5 mm). Can be used with NEMA 1, 3R and 12 fabricated enclosures. An optional handle is available for Flex Shaft that is suitable for use with NEMA 4 and 4X environments. Flex Shaft comes preset from the factory, requiring only minor field adjustments on installation, which takes about 10 minutes — a significant time savings compared to installation of other types of flange handle mechanisms. The Flex Shaft mechanism also takes up less interior enclosure space than competitive designs and the handle fits standard flange cutouts. Flex Shaft Handle can be remotely mounted from breaker, where an operator can use it by "funneling" the cable through conduit.

Flex Shaft is UL listed under File E64983 and meets CSA requirements.

The Type C371 Circuit Breaker Operating Mechanisms are designed for installation in control enclosures where main or branch circuit protective devices are required. All circuit breaker mechanisms are suitable for right-hand mounting.

Auxiliary contacts are not available for mounting on operating mechanisms. Where required, have them installed in circuit breaker.

Type C371 is UL listed under File E62635.

**Table 12-494. Flex Shaft Ordering Information (3-Pole Only)**

| Breaker Frame | Flexible Shaft Length in Feet (m) | | | | | | | |
|---|---|---|---|---|---|---|---|---|
| | 3 (.9) | | 4 (1.2) | | 5 (1.5) | | 6 (1.8) | |
| | Catalog Number | Price U.S. $ | Catalog Number | Price U.S. $ | Catalog Number | Price U.S. $ | Catalog Number | Price U.S. $ |
| E125 | EHMFS03 | 399. | EHMFS04 | 406. | EHMFS05 | 415. | EHMFS06 | 420. |
| J250 | JHMFS03 | 465. | JHMFS04 | 475. | JHMFS05 | 485. | JHMFS06 | 495. |
| G | F0S03C | 399. | F0S04C | 406. | F0S05C | 415. | F0S06C | 420. |
| F | F1S03C | 399. | F1S04C | 406. | F1S05C | 415. | F1S06C | 420. |
| F (Dual) | F1S03CD | 499. | F1S04CD | 510. | F1S05CD | 520. | F1S06CD | 525. |
| J | F2S03C | 465. | F2S04C | 473. | F2S05C | 482. | F2S06C | 487. |
| K | F3S03C | 505. | F3S04C | 515. | F3S05C | 520. | F3S06C | 530. |
| L and MDL | N/A | — | F4S04C | 610. | F4S05C | 620. | F4S06C | 630. |
| N | N/A | — | F5S04C | 645. | F5S05C | 655. | F5S06C | 665. |
| R | N/A | — | F6S04 | 725. | F6S05 | 740. | F6S06 | 755. |
| MD | N/A | — | F7S04C | 610. | F7S05C | 620. | F7S06C | 630. |

*Flush Button — Green*
*Catalog Number E34PB3-53X*

*Extended Button — Red*
*Catalog Number E34EB2-53X*

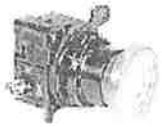

*Mushroom Button — Red*
*Catalog Number E34LB2-53X*

*Jumbo Mushroom — Red*
*Catalog Number E34JB2-1X*

## Product Selection — Assembled Devices

### Momentary Pushbutton Units

■ Non-illuminated

Table 47-305. Pushbutton Units — UL (NEMA) 3, 3R, 4, 4X, 12, 13

| Contact Type | Button Color | Flush Button | | Extended Button | | Mushroom Button | | Jumbo Mushroom ① | |
|---|---|---|---|---|---|---|---|---|---|
| | | Catalog Number | Price U.S. $ | Catalog Number | Price U.S. $ | Catalog Number | Price U.S. $ | Catalog Number | Price U.S. $ |
| 1NO | Black | E34PB1-53X | 28.25 | E34EB1-53X | 28.25 | E34LB1-53X | 48.25 | E34JB1-53X | 55.50 |
| | Red | E34PB2-53X | 28.25 | E34EB2-53X | 28.25 | E34LB2-53X | 48.25 | E34JB2-53X | 55.50 |
| | Green | E34PB3-53X | 28.25 | E34EB3-53X | 28.25 | E34LB3-53X | 48.25 | E34JB3-53X | 55.50 |
| | Red — Engraved EMERG. STOP | — | — | — | — | — | — | E34JB2N8-53X | 61.00 |
| 1NC | Black | E34PB1-51X | 28.25 | E34EB1-51X | 28.25 | E34LB1-51X | 48.25 | E34JB1-51X | 55.50 |
| | Red | E34PB2-51X | 28.25 | E34EB2-51X | 28.25 | E34LB2-51X | 48.25 | E34JB2-51X | 55.50 |
| | Green | E34PB3-51X | 28.25 | E34EB3-51X | 28.25 | E34LB3-51X | 48.25 | E34JB3-51X | 55.50 |
| | Red — Engraved EMERG. STOP | — | — | — | — | — | — | E34JB2N8-51X | 61.00 |
| 1NO-1NC | Black | E34PB1-1X | 38.50 | E34EB1-1X | 38.50 | E34LB1-1X | 58.50 | E34JB1-1X | 65.50 |
| | Red | E34PB2-1X | 38.50 | E34EB2-1X | 38.50 | E34LB2-1X | 58.50 | E34JB2-1X | 65.50 |
| | Green | E34PB3-1X | 38.50 | E34EB3-1X | 38.50 | E34LB3-1X | 58.50 | E34JB3-1X | 65.50 |
| | Red — Engraved EMERG. STOP | — | — | — | — | — | — | E34JB2N8-1X | 70.50 |

① Anodized aluminum head — may not be suitable for some corrosive environments.

### Indicating Light Units

■ Plastic Lenses

*24V Full Voltage*
*Indicating Light — Red*
*Catalog Number*
*E34FB24H2X*

Table 47-306. Indicating Light Units — UL (NEMA) 3, 3R, 3S, 4, 4X, 12, 13

| Lamp | Type | Voltage | Color | Indicating Light ② | | LED/Lamp Number |
|---|---|---|---|---|---|---|
| | | | | Catalog Number | Price U.S. $ | |
| LED | Full Voltage | 24V AC/DC | Red | E34FB197LRP24 | 69.50 | Bayonet Base |
| | | | Green | E34FB197LGP24 | 69.50 | |
| | | | Amber | E34FB197LAP24 | 69.50 | |
| | | 120V AC | Red | E34FB197LRP2A | 69.50 | |
| | | | Green | E34FB197LGP2A | 69.50 | |
| | | | Amber | E34FB197LAP2A | 69.50 | |
| Incandescent | Full Voltage | 24V AC/DC | Red | E34FB24H2X | 58.50 | #757 |
| | | | Green | E34FB24H3X | 58.50 | |
| | | | Amber | E34FB24H9X | 58.50 | |
| | Resistor | 120V AC/DC | Red | E34RB120H2X | 58.50 | 120MB |
| | | | Green | E34RB120H3X | 58.50 | |
| | | | Amber | E34RB120H9X | 58.50 | |
| | Transformer | 120V AC 50/60 Hz | Red | E34TB120H2X | 72.00 | #755 |
| | | | Green | E34TB120H3X | 72.00 | |
| | | | Amber | E34TB120H9X | 72.00 | |

② Anodized aluminum head — may not be suitable for some corrosive environments.

Note: Use NEMA 4X 10250T operators where exposed to ultraviolet light, see Pages 47-123 – 47-173.

Additional Light Units ..... Page 47-186
Dimensions ..... Page 47-200
Enclosures ..... Pages 47-195 – 47-196
Legend Plates ..... Page 47-194
Replacement
Lamps/LEDs ..... Page 47-173
Discount Symbol ..... 1CD1C

*Flush Button — Black*
*Catalog Number E34PB1*

*Extended Button — Red*
*Catalog Number E34EB2*

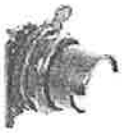

*Half Shrouded Button — Green*
*Catalog Number E34EVB3*

*Mushroom Head Button — Yellow*
*Catalog Number E34LB4*

*Jumbo Mushroom Head Button — Red*
*Catalog Number E34JB2*

# Product Selection — Components

## Pushbuttons

Table 47-319. Momentary Pushbutton Operators, Non-illuminated — UL (NEMA) 3, 3R, 4, 4X, 12, 13

| Color | Flush Button | | Extended Button | | Half Shrouded Button | | |
|---|---|---|---|---|---|---|---|
| | Catalog Number | Price U.S. $ | Catalog Number | Price U.S. $ | Vertical | Horiz. | Price U.S. $ |
| Black | E34PB1 | 18.20 | E34EB1 | 18.20 | E34EVB1 | E34EHB1 | 18.20 |
| Red | E34PB2 | 18.20 | E34EB2 | 18.20 | E34EVB2 | E34EHB2 | 18.20 |
| Green | E34PB3 | 18.20 | E34EB3 | 18.20 | E34EVB3 | E34EHB3 | 18.20 |
| Yellow | E34PB4 | 18.20 | E34EB4 | 18.20 | E34EVB4 | E34EHB4 | 18.20 |
| White | E34PB5 | 18.20 | E34EB5 | 18.20 | E34EVB5 | E34EHB5 | 18.20 |
| Blue | E34PB6 | 18.20 | E34EB6 | 18.20 | E34EVB6 | E34EHB6 | 18.20 |
| Gray | E34PB7 | 18.20 | E34EB7 | 18.20 | E34EVB7 | E34EHB7 | 18.20 |
| Orange | E34PB8 | 18.20 | E34EB8 | 18.20 | E34EVB8 | E34EHB8 | 18.20 |

Table 47-320. Mushroom Head Momentary Pushbutton Operators, Non-illuminated — UL (NEMA) 3, 3R, 4, 4X, 12, 13

| Color | Mushroom Button | | Anodized Aluminum Jumbo Mushroom Button ① | |
|---|---|---|---|---|
| | Catalog Number | Price U.S. $ | Catalog Number | Price U.S. $ |
| Black | E34LB1 | 38.50 | E34JB1 | 45.25 |
| Red | E34LB2 | 38.50 | E34JB2 | 45.25 |
| Red (Engraved EMER. STOP) | — | — | E34JB2N8 | 50.50 |
| Green | E34LB3 | 38.50 | E34JB3 | 45.25 |
| Yellow | E34LB4 | 38.50 | E34JB4 | 45.25 |
| Blue | E34LB6 | 38.50 | — | — |

① Anodized aluminum head — may not be suitable for some corrosive environments.

Note: Use NEMA 4X 10250T operators where exposed to ultraviolet light, see Pages 47-123 – 47-173.

### Contact Blocks

See **Page 47-193** for additional contact blocks, fingerproof shrouds and Transparent Amber colored blocks.

*Contact Block*

Table 47-321. Contact Blocks

| Symbol | Circuit | Catalog Number | Price U.S. $ |
|---|---|---|---|
| Blank No Plunger | NC | 10250T51 | 10.10 |
| Blank No Plunger | NO | 10250T53 | 10.10 |
| | NO-NC | 10250T1 | 20.10 |
| | 2NC | 10250T3 | 20.10 |
| | 2NO | 10250T2 | 20.10 |

*BRSURGE Surge Protector*

**BRSURGE** — For use on single-phase, 120/240V AC systems. This easily plugs into a single-phase Type BR loadcenter and occupies two 1-inch (25.4 mm) pole spaces similar to a 2-pole Type BR breaker. When plugged into the first two stabs at the top of the loadcenter just below the main breaker or main lug, it provides surge protection for the entire loadcenter. If internal components are damaged, the BRSURGE LED visual indicators will signal the need for replacement. This device is suitable for service entry locations installed in accordance with NEC Article 280. The BRSURGE is ideal for protecting sensitive appliances and electronics, such as refrigerators, microwave ovens, and home computers.

*CHSA01 Surge Protector*

**CHSA01** — For use on single-phase, 120/240V AC systems. This surge protector can be easily installed in the enclosure of indoor or outdoor loadcenters by using the 1/2-inch (12.7 mm) threaded nipple. It is ideal for protecting outdoor lighting, garages, sump and irrigation pumps, etc.

*CHSA03 Surge Protector*

**CHSA03** — For use on three-phase, 600V AC systems. This surge protector is installed in the enclosure of indoor and outdoor loadcenters by using the 1/2-inch (12.7 mm) threaded nipple. It provides protection for commercial electrical services especially those using electric motors.

**Table 3-112. Surge Protectors**

| Description | Discharge Voltage, V AC | | | | Lead Length Inches (mm) | Catalog Number | Price U.S. $ |
|---|---|---|---|---|---|---|---|
| | 1.5 kA | 3 kA | 5 kA | 10 kA | | | |
| Surge Protector Plug-On Type BR, Single-Phase, 120/240V AC | 345 | 370 | 500 | 545 | 8 (203.2) | BRSURGE | 108. |
| Surge Protector, 2-Pole Single-Phase, 3-Wire, 120/240V AC | 490 | 640 | 980 | 1410 | 15 (381.0) | CHSA01 | 51. |
| Surge Protector, 3-Pole Three-Phase, 4-Wire, 600V AC | 1700 | 2100 | 2510 | 3800 | 15 (381.0) | CHSA03 | 103. |

# REDINGTON COUNTERS (711-0160)

# MODEL 711 HOUR METER

Model 711 / 731

## Features

These 7 figure, AC or DC hourmeters with running indicators, offer crisp, distinctive styling for many panel applications. Available in square and round bezel, flush mount, or three-hole round panel mount. Each is light-weight, low power, and carry UL, CSA and CE approvals.

## Specifications

| | |
|---|---|
| Figures | 7 figures, .14" high<br>99,999.99 hours |
| Reset | Non-reset |
| Voltages | 24, 115, or 230VAC (+/-10%), 50 or 60Hz., 10-80 VDC |
| Power | 3 watts (AC), 1.2 watt maximum (DC) |
| Mounting | Panel (mounting hardware included) |
| Terminations | 1/4" spade terminals, with removable screws, or 8" wire leads |
| Temp. Range | -22°F to +158°F |
| Approvals | UL Recognized and CSA Certified (AC only),<br>CE Compliant |
| Weight | 2 oz. |
| Options | Din Rail |

| Models | Description |
|---|---|
| 711-0150 | 115VAC/60Hz., 2.28" Dia., Flush mount, screw termination |
| 711-0152 | 230VAC/60Hz., 2.28" Dia., Flush mount, screw termination |
| 711-0160 | 115VAC/60Hz., 2.93" Dia., 3-hole round, screw termination |
| 711-0161 | 115VAC/50Hz., 2.93" Dia., 3-hole round, screw termination |
| 711-0162 | 230VAC/60Hz., 2.93" Dia., 3-hole round, screw termination |
| 711-0163 | 230VAC/50Hz., 2.93" Dia., 3-hole round, screw termination |
| 711-0164 | 24VAC/60Hz., 2.93" Dia., 3-hole round, screw termination |
| 711-0170 | 230VAC/60Hz., 2.93" Dia., 3-hole round, 8" wire leads |
| 711-0171 | 115VAC/60Hz., 2.93" Dia., 3-hole round, 8" wire leads |
| 711-0180 | 115VAC/60Hz., 1.89" Sq., Flush mount, screw termination |
| 711-0182 | 24VAC/60Hz., 1.89" Sq., Flush mount, screw termination |
| 711-0190 | 115VAC/60Hz., 2.05" Sq., Flush mount, screw termination |
| 711-0191 | 230VAC/60Hz., 2.05" Sq., Flush mount, screw termination |
| 711-0192 | 24VAC/60Hz., 2.05" Sq., Flush mount, screw termination |
| 711-0193 | 115VAC/50Hz., 2.05" Sq., Flush mount, screw termination |
| 711-0194 | 230VAC/50Hz., 2.05" Sq., Flush mount, screw termination |
| 711-0195 | 24VAC/50Hz., 2.05" Sq., Flush mount, screw termination |
| 711-0200 | 115VAC/60Hz., 2.20" Sq., Flush mount, screw termination |
| 711-0201 | 115VAC/50Hz., 2.20" Sq., Flush mount, screw termination |
| 731-0046 | 10-80VDC, 2.93" Dia., 3-hole round, screw termination |

## Dimensions

2.28" Dia. FLUSH

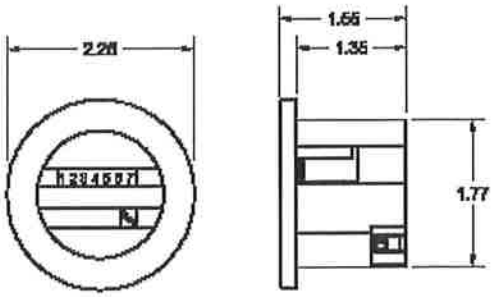


Panel cutout: 1.99" Dia. or 1.81" Sq.

3-HOLE ROUND

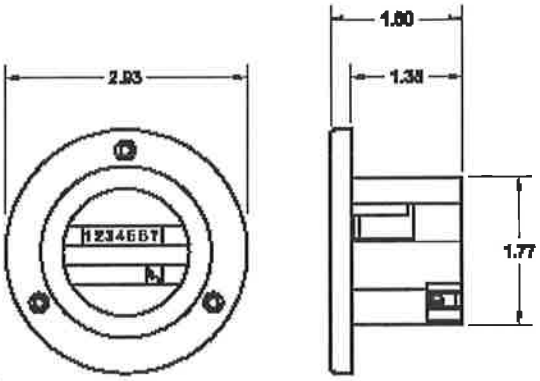


Panel cutout: 1.99" Dia. or 1.81" Sq.
Screws provided: 4-40 x 5/8"
Bolt hole circle: 2.44"

1.89", 2.05", or 2.20" Sq. FLUSH

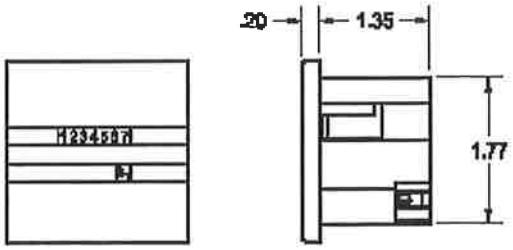


Panel cutout: 1.99" Dia. or 1.81" Sq.

# MICRON (B2K0BTZ13JKH)

# CONTROL CIRCUIT TRANSFORMER

Micron offers a broad line of standard transformers, each made with the finest materials and workmanship. Laminations of the finest silicon steel assure optimum performance and the finest quality copper magnet wire assures efficient operation. Insulation materials are of the highest rating available for the temperature class; mounting brackets of heavy gauge steel add strength and stability; and a detailed but easy-to-read nameplate assures easy identification. All are UL 506 listed (File # E46323) and CSA Certified (File # LR27533) and meet NEMA and ANSI requirements.

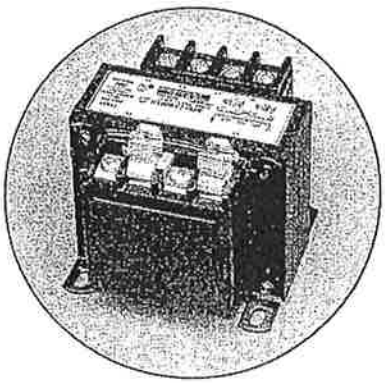

Group A

MICRON

**Primary Volts**

240 x 480, 230 x 460, 220 x 440

**Secondary Volts**

120 • 115 • 110

UL Listed and CSA Certified 50 / 60 Hz

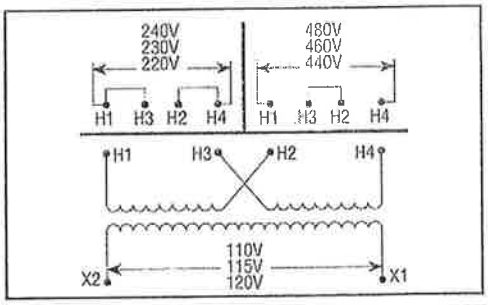


| VA Rating | Catalog Number | Construction Figure | Output Amps | DIMENSIONS (inches) • mm A | B | C | D | E | Mounting Slots | Approx. Wt. (lbs.) • kg |
|---|---|---|---|---|---|---|---|---|---|---|
| 25 | B025BTZ13JK | B | 0.22 | 2 1/2 • 64 | 3 • 76 | 2 9/16 • 65 | 1 1/2 • 38 | 2 1/2 • 64 | 13/64 X 3/8 • 5 X 10 | 1.7 • 0.8 |
| 50 | B050BTZ13JK | B | 0.43 | 3 • 76 | 3 • 76 | 2 9/16 • 65 | 2 • 51 | 2 1/2 • 64 | 13/64 X 3/8 • 5 X 10 | 2.6 • 1.2 |
| 75 | B075BTZ13JK | B | 0.65 | 3 1/2 • 89 | 3 • 76 | 2 9/16 • 65 | 2 1/2 • 64 | 2 1/2 • 64 | 13/64 X 3/8 • 5 X 10 | 3.5 • 1.6 |
| 100 | B100BTZ13JK | B | 0.87 | 3 3/8 • 86 | 3 3/8 • 86 | 2 7/8 • 73 | 2 3/8 • 60 | 2 13/16 • 71 | 13/64 X 3/8 • 5 X 10 | 4.2 • 1.9 |
| 150 | B150BTZ13JK | B | 1.30 | 4 • 102 | 3 3/4 • 95 | 3 3/16 • 81 | 2 7/8 • 73 | 3 1/8 • 79 | 13/64 X 3/8 • 5 X 10 | 6.7 • 3.1 |
| 200 | B200BTZ13JK | B | 1.74 | 4 • 102 | 4 1/2 • 114 | 3 13/16 • 97 | 2 1/2 • 64 | 3 3/4 • 95 | 13/64 X 3/8 • 5 X 10 | 8.5 • 3.9 |
| 250 | B250BTZ13JK | B | 2.17 | 4 3/8 • 111 | 4 1/2 • 114 | 3 13/16 • 97 | 2 7/8 • 73 | 3 3/4 • 95 | 13/64 X 3/8 • 5 X 10 | 10.0 • 4.6 |
| 300 | B300BTZ13JK | B | 2.61 | 4 3/4 • 121 | 4 1/2 • 114 | 3 13/16 • 97 | 3 1/4 • 83 | 3 3/4 • 95 | 13/64 X 3/8 • 5 X 10 | 11.3 • 5.1 |
| 350 | B350BTZ13JK | B | 3.04 | 5 1/4 • 133 | 4 1/2 • 114 | 3 13/16 • 97 | 3 3/4 • 95 | 3 3/4 • 95 | 13/64 X 3/8 • 5 X 10 | 13.6 • 6.2 |
| 500 | B500BTZ13JK | B | 4.35 | 5 1/2 • 140 | 5 1/4 • 133 | 4 3/4 • 121 | 4 3/4 • 108 | 4 3/8 • 111 | 5/16 X 11/16 • 8 X 17 | 19.2 • 8.7 |
| 750 | B750BTZ13JK | B | 6.52 | 7 • 178 | 5 1/4 • 133 | 4 3/4 • 121 | 5 3/4 • 146 | 4 3/8 • 111 | 5/16 X 11/16 • 8 X 17 | 28.1 • 12.8 |
| 1000 | VF1K0BTZ13JK | V | 8.70 | 5 • 127 | 6 3/4 • 171 | 5 3/4 • 146 | 3 5/8 • 92 | 6 1/16 • 154 | 5/16 X 9/16 • 8 X 14 | 28.0 • 12.7 |
| 1000 | EF1K0BTZ13 | E | 8.70 | 7 7/8 • 200 | 5 1/4 • 133 | 4 7/16 • 113 | 5 1/2 • 140 | 4 3/8 • 111 | 9/32 X 13/32 • 7 X 10 | 29.8 • 13.6 |
| 1500 | EF1K5BTZ13 | E | 13.04 | 6 3/4 • 171 | 6 3/4 • 171 | 5 11/16 • 144 | 3 9/16 • 91 | 6 1/16 • 154 | 9/32 X 9/16 • 7 X 14 | 30.0 • 13.6 |
| 2000 | EF2K0BTZ13 | E | 17.39 | 7 • 178 | 6 3/4 • 171 | 5 11/16 • 144 | 4 7/16 • 113 | 6 1/16 • 154 | 9/32 X 9/16 • 7 X 14 | 38.0 • 17.3 |
| 3000 | EF3K0BTZ13 | E | 26.09 | 7 1/2 • 191 | 9 • 229 | 7 9/16 • 192 | 4 1/8 • 105 | 6 1/2 • 165 | 7/16 X 3/4 • 11 X 19 | 53.0 • 24.1 |
| 5000 | EF5K0BTZ13 | E | 43.48 | 7 3/4 • 197 | 9 • 229 | 7 9/16 • 192 | 6 • 152 | 6 1/2 • 165 | 7/16 X 3/4 • 11 X 19 | 89.0 • 40.5 |

JK suffix denotes transformer supplied with primary J-2 jumpers & secondary fuse clips for a 13/16 x 1 1/2 fuse.
Construction figure E units rated for 60Hz at 240 x 480 input and do not come with secondary fuse clips.

## 60 Series - General Purpose Relays 10 A

- 8 - 11 pin plug-in
- AC or DC coils
- Lockable test button with mechanical flag indicator
- Bifurcated contact option
- Sockets and accessories: see 90, 99 and 86 series

| | 60.12 | 60.12 - 0200 | 60.13 |
|---|---|---|---|
| | 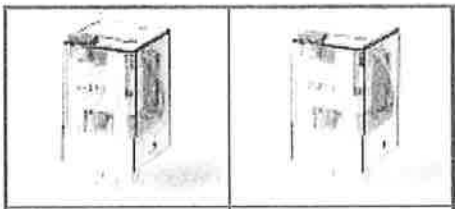 |  | 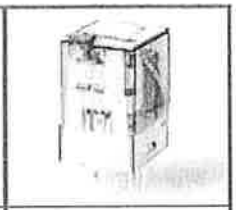 |
| | - 2 pole<br>- 8 pin<br>- Plug in for use with 90 series sockets | - 2 bifurcated contacts, for low level switching capability<br>- 8 pin<br>- Plug in for use with 90 series sockets | - 3 pole<br>- 11 pin<br>- Plug in for use with 90 series sockets |
| | 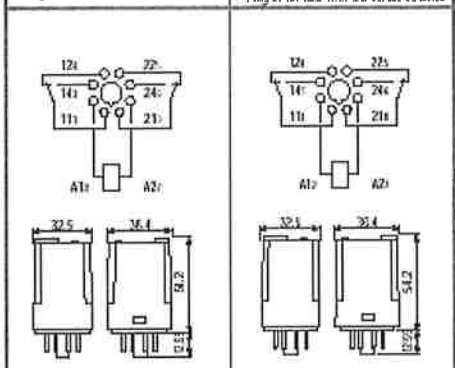 |  | 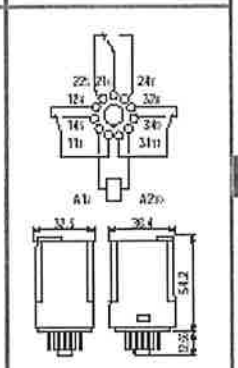 |

* For 400 V applications, where requirements for pollution degree 2 are met.

| | | | | |
|---|---|---|---|---|
| **Contact specifications** | | | | |
| Contact configuration | | 2 CO | 2 CO | 3 CO |
| Rated current/Maximum peak current | A | 10/20 | 6/10 | 10/20 |
| Rated voltage/Maximum switching voltage | V AC | 250/400* | 250/400* | 250/400* |
| Rated load in AC1 | VA | 2,500 | 1,500 | 2,500 |
| Rated load in AC15 (230 VAC) | VA | 500 | 250 | 500 |
| Single phase motor rating (230 VAC) | kW | 0.37 | 0.185 | 0.37 |
| Breaking capacity in DC1: 30/110/220V | A | 10/0.4/0.15 | 6/0.3/0.12 | 10/0.4/0.15 |
| Minimum switching load | mW (V/mA) | 500 (10/5) | 50 (5/5) | 500 (10/5) |
| Standard contact material | | AgNi | AgNi bifurcated contacts | AgNi |
| **Coil specifications** | | | | |
| Nominal voltage ($U_N$) | V AC (50/60 Hz) | 6 - 12 - 24 - 48 - 60 - 110 - 120 - 230 - 240 - 400 | | |
| | V DC | 6 - 12 - 24 - 48 - 60 - 110 - 125 - 220 | | |
| Rated power AC/DC | VA (50 Hz)/W | 2.2/1.3 | 2.2/1.3 | 2.2/1.3 |
| Operating range | AC | $(0.8...1.1)U_N$ | $(0.8...1.1)U_N$ | $(0.8...1.1)U_N$ |
| | DC | $(0.8...1.1)U_N$ | $(0.8...1.1)U_N$ | $(0.8...1.1)U_N$ |
| Holding voltage | AC/DC | $0.8\ U_N/0.5\ U_N$ | $0.8\ U_N/0.5\ U_N$ | $0.8\ U_N/0.5\ U_N$ |
| Max drop-out voltage | AC/DC | $0.2\ U_N/0.1\ U_N$ | $0.2\ U_N/0.1\ U_N$ | $0.2\ U_N/0.1\ U_N$ |
| **Technical data** | | | | |
| Mechanical life AC/DC | cycles | $20 \cdot 10^6/50 \cdot 10^6$ | $20 \cdot 10^6/50 \cdot 10^6$ | $20 \cdot 10^6/50 \cdot 10^6$ |
| Electrical life at rated load AC1 | cycles | $200 \cdot 10^3$ | $250 \cdot 10^3$ | $200 \cdot 10^3$ |
| Operate/release time | ms | 9/9 | 9/9 | 9/9 |
| Insulation according to EN 61810-5 | | 4 kV/3 | 4 kV/3 | 3.6 kV/3 |
| Insulation between coil and contacts (1.2/50µs) | kV | 3.6 | 3.6 | 3.6 |
| Dielectric strength between open contacts | V AC | 1,000 | 1,000 | 1,000 |
| Ambient temperature range | °C | -40...+70 | -40...+70 | -40...+70 |
| Environmental protection | | RT I | RT I | RT I |
| Approvals: (according to type) | | CE ABS GOST RINA | | |

60

## ORDERING INFORMATION

Example: a 60 series plug-in relay, 3 CO (3PDT) with coil rated 12 V DC, test button and mechanical indicator.

| 6 | 0 | . | 1 | 3 | . | 9 | . | 0 1 2 | . | 0 (A) | 0 (B) | 4 (C) | 0 (D) |
|---|---|---|---|---|---|---|---|---|---|---|---|---|---|

Series

Type
1 = 8/11 pin plug-in
6 = Faston 187 (mm 4.8x0.8) with flange mount

No. of poles
2 = 2 pole
3 = 3 pole

Coil version
4 = Current sensing
8 = AC (50/60 Hz)
9 = DC

Coil voltage
see coil specifications

A: Contact material
0 = Standard
2 = AgCdO
5 = AgNi + 5µm Au

B: Contact circuit
0 = CO
2 = Bifurcated contacts 60.12/13 - 6A only

C: Options
0 = None
2 = Mechanical indicator
3 = LED (AC)
4 = Lockable test button + mechanical indicator
5 = Lockable test button + LED (AC)
54 = Lockable test button + LED (AC) + mechanical indicator
6 = LED + diode (positive to pin 2, DC)
7 = Lockable test button + LED + diode (positive to pin 2)
74 = Lockable test button + LED + diode (positive to pin 2) + mechanical indicator

D: Special versions
0 = Standard

Only combinations in the same row are possible

Preferred versions

| | coil version | A | B | C | D |
|---|---|---|---|---|---|
| 60.12/13 | AC/DC | 0 | 0 | 4 | 0 |
| 60.62/63 | AC/DC | 0 | 0 | 0 | 0 |

All versions

| | coil version | A | B | C | D |
|---|---|---|---|---|---|
| 60.12/13 | AC | 0 - 2 | 0 | 0 - 2 - 3 - 4 - 5 | 0 |
| | AC | 0 - 2 | 0 | 54 | / |
| | AC | 5 | 0 - 2 | 0 - 2 - 3 - 4 - 5 | 0 |
| | AC | 5 | 0 - 2 | 54 | / |
| | DC | 0 - 2 | 0 | 0 - 2 - 4 - 5 - 7 | 0 |
| | DC | 0 - 2 | 0 | 74 | / |
| | DC | 5 | 0 - 2 | 0 - 2 - 4 - 5 - 7 | 0 |
| | DC | 5 | 0 - 2 | 74 | / |
| | current sensing | 0 | 0 | 4 | 0 |
| 60.62/63 | AC/DC | 0 - 2 - 5 | 0 | 0 | 0 |



## POSSIBLE OPTIONS

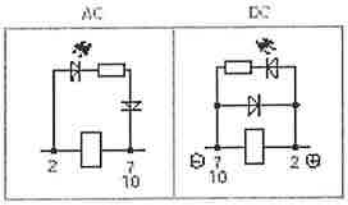


Option = 0030 0050 0054

Option = 0060 0070 0074

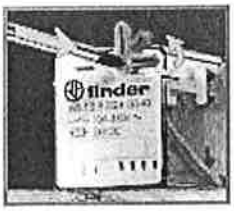


LOCKABLE TEST BUTTON AND MECHANICAL FLAG INDICATOR (0040)

The dual-purpose Finder test button can be used in two ways:

Case 1) The plastic pip (located directly above the test button) remains intact. In this case, when the test button is pushed, the contacts operate. When the test button is released the contacts return to their former state.

Case 2) The plastic pip is broken-off (using an appropriate cutting tool). In this case, (in addition to the above function), when the test button is pushed and rotated, the contacts are latched in the operating state, and remain so until the test button is rotated back to its former position. In both cases ensure that the test button actuation is swift and decisive.

## ACCESSORIES

060.72

| | |
|---|---|
| Sheet of marker tags for relay types 60.12 and 60.13 (72 tags): 6x12mm | 060.72 |

## TECHNICAL DATA

INSULATION

| | | | | |
|---|---|---|---|---|
| INSULATION according to EN 61810-5 | insulation rated voltage | V | 250 | |
| | rated impulse withstand voltage | kV | 4 (2 pole) | 3.6 (3 pole) |
| | pollution degree | | 3 | |
| | overvoltage category | | III | |

60

IMMUNITY

| | |
|---|---|
| CONDUCTED DISTURBANCE IMMUNITY | BURST (according to EN 61000-4-4) level 4 (4kV) |
| | SURGE (according to EN 61000-4-5) level 4 (4kV) |

OTHER DATA

| | | | |
|---|---|---|---|
| BOUNCE TIME: NO/NC | ms | 2/4 | |
| VIBRATION RESISTANCE (10...55Hz): NO/NC | g/g | 5/3 | |
| POWER LOST TO THE ENVIRONMENT | | 2 CO | 3 CO |
| without contact current | W | 1.3 | 1.3 |
| with rated current | W | 2.7 | 3.4 |

## CONTACT SPECIFICATIONS

F 60

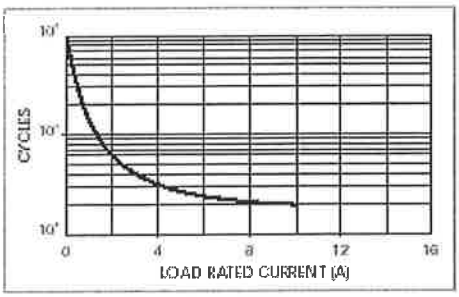


Electrical life vs AC1 load.

H 60

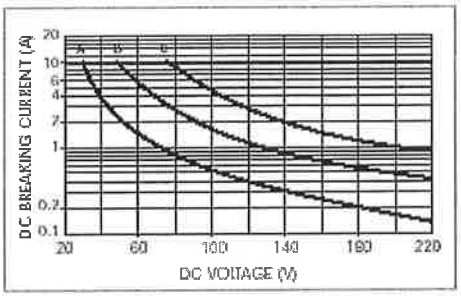


Breaking capacity for DC1 load.
A = Load applied to 1 contact
B = Load applied to 2 contacts in series
C = Load applied to 3 contacts in series

• When switching a resistive load (DC1) having voltage and current values under the curve the expected electrical life is ≥ 100·10³ cycles.
• In case of DC13 loads the connection of a diode in parallel with the load will permit the same electrical life as for a DC1 load.
**Note:** the release time of load will be increase.

## COIL SPECIFICATIONS

DC VERSION DATA

| Nominal voltage $U_N$ V | Coil code | Operating range $U_{min}$ V | $U_{max}$ V | Resistance R Ω | Rated coil consumption (at $U_N$) mA |
|---|---|---|---|---|---|
| 6 | 9.006 | 4.8 | 6.6 | 28 | 214 |
| 12 | 9.012 | 9.6 | 13.2 | 110 | 109 |
| 24 | 9.024 | 19.2 | 26.4 | 445 | 53.9 |
| 48 | 9.048 | 38.4 | 52.8 | 1,770 | 27.1 |
| 60 | 9.060 | 48 | 66 | 2,700 | 21.7 |
| 110 | 9.110 | 88 | 121 | 9,420 | 11.7 |
| 125 | 9.125 | 100 | 137.5 | 12,000 | 10.4 |
| 220 | 9.220 | 176 | 242 | 37,300 | 5.8 |

AC VERSION DATA

| Nominal voltage $U_N$ V | Coil code | Operating range $U_{min}$ V | $U_{max}$ V | Resistance R Ω | Rated coil consumption (at $U_N$ (50Hz)) mA |
|---|---|---|---|---|---|
| 6 | 8.006 | 4.8 | 6.6 | 4.5 | 367 |
| 12 | 8.012 | 9.6 | 13.2 | 19 | 183 |
| 24 | 8.024 | 19.2 | 26.4 | 74 | 90 |
| 48 | 8.048 | 38.4 | 52.8 | 290 | 47 |
| 60 | 8.060 | 48 | 66 | 450 | 37 |
| 110 | 8.110 | 88 | 121 | 1,600 | 20 |
| 120 | 8.120 | 96 | 132 | 1,940 | 18.6 |
| 230 | 8.230 | 184 | 253 | 7,250 | 10.5 |
| 240 | 8.240 | 192 | 264 | 8,500 | 9.2 |
| 400 | 8.400 | 320 | 440 | 19,800 | 6 |

R 60 DC

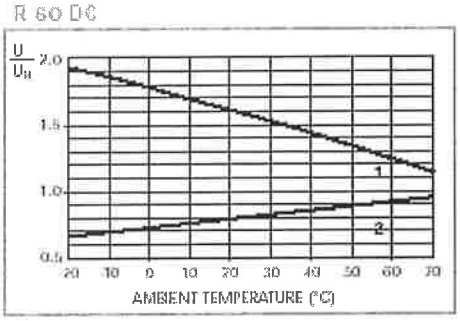


Operating range (DC version) vs ambient temperature.
1 - Max coil voltage permitted.
2 - Min pickup voltage with coil at ambient temperature.

R 60 AC

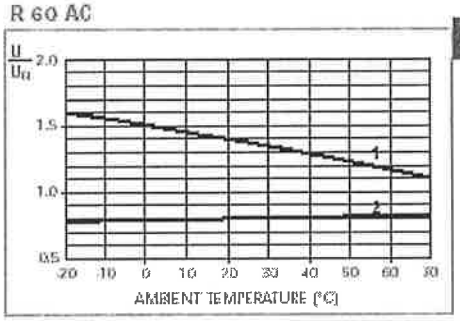


Operating range (AC version) vs ambient temperature.
1 - Max coil voltage permitted.
2 - Min pick-up voltage with coil at ambient temperature.

60

## CURRENT SENSING VERSION

Wiring Diagram

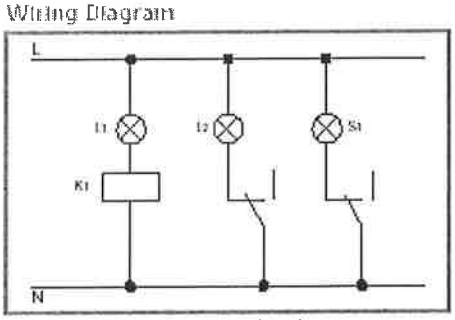


Typical application with current sensing relays.
An open circuit filament of lamp L1 is detected by the current sensing relay coil (K1) which causes the back-up safety lamp L2 to be energised, and indication of failure at the control panel via lamp S1.
Example: navigation light.
L1 = Light
L2 = Safety light
S1 = Control light
K1 = Relay

60 Series - CURRENT SENSING AC

| Coil code | $I_{min}$ (A) | $I_N$ (A) | $I_{max}$ (A) | R (Ω) |
|---|---|---|---|---|
| 4251 | 2.1 | 2.5 | 3.0 | 0.05 |
| 4181 | 1.5 | 1.8 | 2.2 | 0.10 |
| 4161 | 1.4 | 1.6 | 1.9 | 0.12 |
| 4121 | 1.0 | 1.2 | 1.4 | 0.22 |
| 4101 | 0.86 | 1.0 | 1.2 | 0.32 |
| 4051 | 0.42 | 0.5 | 0.6 | 1.28 |
| 4041 | 0.34 | 0.4 | 0.5 | 2.00 |
| 4031 | 0.26 | 0.3 | 0.4 | 3.57 |
| 4021 | 0.17 | 0.2 | 0.25 | 8.0 |
| 4011 | 0.085 | 0.1 | 0.15 | 32.1 |

60 Series - CURRENT SENSING DC

| Coil code | $I_{min}$ (A) | $I_N$ (A) | $I_{max}$ (A) | R (Ω) |
|---|---|---|---|---|
| 4202 | 1.7 | 2.0 | 2.4 | 0.15 |
| 4182 | 1.5 | 1.8 | 2.2 | 0.19 |
| 4162 | 1.4 | 1.6 | 1.9 | 0.24 |
| 4142 | 1.2 | 1.4 | 1.7 | 0.31 |
| 4122 | 1.0 | 1.2 | 1.4 | 0.42 |
| 4102 | 0.86 | 1.0 | 1.2 | 0.61 |
| 4092 | 0.8 | 0.9 | 1.1 | 0.75 |
| 4062 | 0.5 | 0.6 | 0.7 | 1.70 |
| 4032 | 0.26 | 0.3 | 0.4 | 6.70 |
| 4012 | 0.085 | 0.1 | 0.15 | 61 |

Other types of current sensing relays are available on request.

# 85 Series - Miniature plug-in timers 7 - 10 A

- *Plug-in timer relay*
- *2, 3 or 4 CO (DPDT, 3PDT or 4PDT) contact available*
- *Seven time scales, from 0.05s to 100h*
- *Multifunctions*
- *Sockets: see 94 series*

85.02/85.04

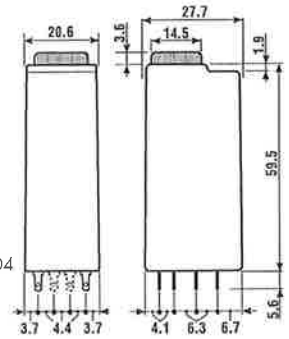


85.03

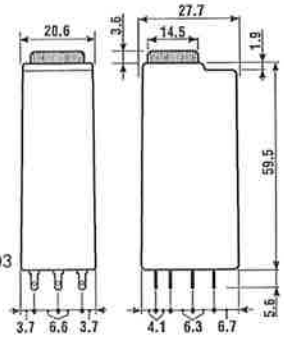


| | 85.02 | 85.03 | 85.04 |
|---|---|---|---|
| | | | |
| | - 2 pole, 10 A<br>- AC/DC supply non polarized<br>- Plug-in for use with 94 series sockets | - 3 pole, 10 A<br>- AC/DC supply non polarized<br>- Plug-in for use with 94 series sockets | - 4 pole, 7 A<br>- AC/DC supply non polarized<br>- Plug-in for use with 94 series sockets |
| | **AI:** ON delay<br>**DI:** ON pulse<br>**SW:** Symmetrical recycler: ON start<br>**GI:** Fixed pulse (0.5s) delayed | **AI:** ON delay<br>**DI:** ON pulse<br>**SW:** Symmetrical recycler: ON start<br>**GI:** Fixed pulse (0.5s) delayed | AI: ON delay<br>**DI:** ON pulse<br>**SW:** Symmetrical recycler: ON start<br>**GI:** Fixed pulse (0.5s) delayed |
| | 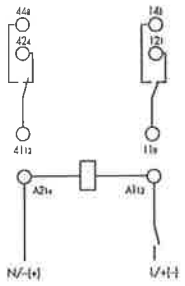 <br>wiring diagram | 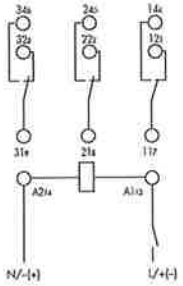 <br>wiring diagram | 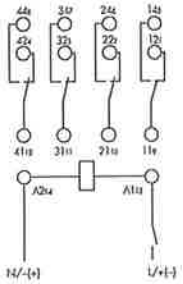 <br>wiring diagram |
| **Contact specifications** | | | |
| Contact configuration | 2 CO (DPDT) | 3 CO (3PDT) | 4 CO (4PDT) |
| Rated current/Maximum peak current A | 10/20 | 10/20 | 7/15 |
| Rated voltage/Maximum switching voltage V AC | 250/400 | 250/400 | 250/250 |
| Rated load in AC1 VA | 2,500 | 2,500 | 1,750 |
| Rated load in AC15 (230 V AC) VA | 500 | 500 | 350 |
| Single phase motor rating (230 V AC) kW | 0.37 | 0.37 | 0.125 |
| Breaking capacity in DC1: 30/110/220 V A | 10/0.25/0.12 | 10/0.25/0.12 | 7/0.25/0.12 |
| Minimum switching load mW(V/mA) | 300 (5/5) | 300 (5/5) | 300 (5/5) |
| Standard contact material | AgNi | AgNi | AgNi |
| **Supply specifications** | | | |
| Nominal voltage V AC (50/60 Hz) | 230...240 | 230...240 | 230...240 |
| V AC/DC | 12 - 24 - 48 - 110...125 (non polarized) | | |
| Rated power AC/DC VA (50 Hz)/W | 2/2 | 2/2 | 2/2 |
| Operating range AC | (0.85...1.1)$U_N$ | (0.85...1.1)$U_N$ | (0.85...1.1)$U_N$ |
| DC | (0.85...1.1)$U_N$ | (0.85...1.1)$U_N$ | (0.85...1.1)$U_N$ |
| **Technical data** | | | |
| Specified time range | (0.05...1)s, (0.5...10)s, (5...100)s, (0.5...10)min, (5...100)min, (0.5...10)h, (5...100)h | | |
| Repeatability % | ± 2 | ± 2 | ± 2 |
| Recovery time ms | ≤ 20 | ≤ 20 | ≤ 20 |
| Minimum control impulse ms | — | — | — |
| Setting accuracy-full range % | ± 5 | ± 5 | ± 5 |
| Electrical life at rated load in AC1 cycles | 200 · $10^3$ | 200 · $10^3$ | 200 · $10^3$ |
| Ambient temperature range °C | –20...+60 | –20...+60 | –20...+60 |
| Protection category | IP 40 | IP 40 | IP 40 |
| **Approvals** (according to type): | CE GOST cULus | | |

85

## ORDERING INFORMATION

Example: 85 series timer, 4 CO (4PDT), 24 V AC/DC supply voltage with AI - DI functions.

8 5 . 0 4 . 0 . 0 2 4 . 0 0 0 0

**Series**

**Type**
0 = Multifunction (AI, DI, GI, SW)

**No. of poles**
2 = 2 pole - 10 A
3 = 3 pole - 10 A
4 = 4 pole - 7 A

**Supply voltage**
012 = 12 V AC/DC
024 = 24 V AC/DC
048 = 48 V AC/DC
125 = (110...125)V AC/DC
240 = (230...240)V AC

**Supply version**
0 = AC (50/60 Hz)/DC
8 = AC (50/60 Hz) for 240 V only

## TECHNICAL DATA

### EMC SPECIFICATIONS

| TYPE OF TEST | | REFERENCE STANDARD | |
|---|---|---|---|
| Electrostatic discharge | - contact discharge | EN 61000-4-2 | n.a. |
| | - air discharge | EN 61000-4-2 | 8 kV |
| Radio-frequency electromagnetic field (80 ÷ 1000 MHz) | | EN 61000-4-3 | 15 V/m |
| Fast transients (burst) (5-50 ns, 5 kHz) on Supply terminals | | EN 61000-4-4 | 4 kV |
| Surges (1.2/50 µs) on Supply terminals | - common mode | EN 61000-4-5 | 4 kV |
| | - differential mode | EN 61000-4-5 | 2 kV |
| Radio-frequency common mode (0.15 ÷ 80 MHz) on Supply terminals | | EN 61000-4-6 | 10 V |
| Power-frequency (50 Hz) | | EN 61000-4-8 | 30 A/m |
| Radiated and conducted emission | | EN 55022 | class B |

### INSULATION

| Dielectric strength | | 85.02/03 | 85.04 |
|---|---|---|---|
| - between input and output circuit | V AC | 2,000 | 2,000 |
| - between open contacts | V AC | 1,000 | 1,000 |
| Insulation (1.2/50 µs) between input and output | kV | 6 | 4 |

85

### OTHER DATA

| Power lost to the environment | | 2 pole | 3 pole | 4 pole |
|---|---|---|---|---|
| without contact current | W | 1.6 | 1.6 | 1.6 |
| with rated current | W | 3.7 | 4.7 | 3.6 |

## TIME SCALES

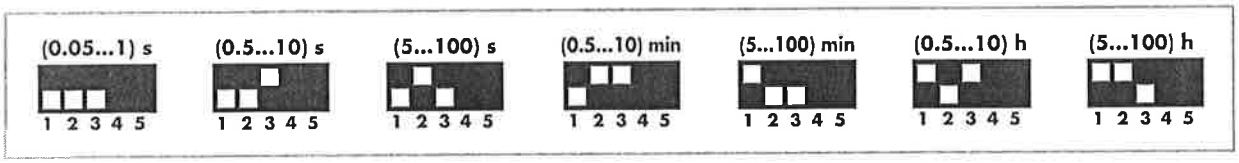


NOTE: time scales and functions must be set before energising the timer.

## FUNCTIONS

| | LED | Supply voltage | NO (SPDT-NO) output contact | Contacts Open | Contacts Closed |
|---|---|---|---|---|---|
| U = Supply voltage<br>= Output contact | | OFF | Open | x1 - x4 | x1 - x2 |
| | | ON | Open | x1 - x4 | x1 - x2 |
| | | ON | Open (Timing in Progress) | x1 - x4 | x1 - x2 |
| | | ON | Closed | x1 - x2 | x1 - x4 |

Wiring diagram

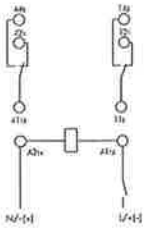
85.02

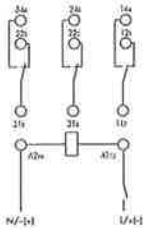
85.03

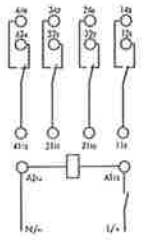
85.04

**Types: 85.02, 85.03, 85.04**

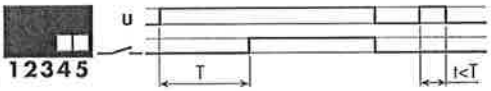


**(AI) ON delay.**
Apply power to timer.
Output contacts transfer after preset time has elapsed.
Reset occurs when power is removed.

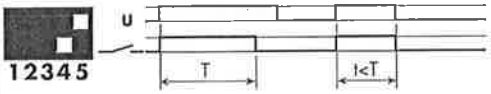


**(DI) ON pulse.**
Apply power to timer.
Output contacts transfer immediately.
After the preset time has elapsed, contacts reset.

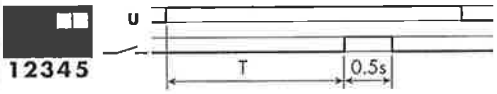


**(GI) Fixed pulse (0.5s) delayed.**
Apply power to timer. Output contacts transfer after preset time has elapsed. Reset occurs after a fixed time of 0.5s. 0.5s.

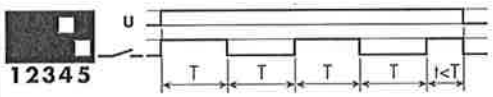


**(SW) Symmetrical recycler: ON start.**
Apply power to timer.
Output contacts transfer immediately and cycle between ON and OFF for as long as power is applied.
The ratio is 1:1 (time on = time off).

85

| | |
|---|---|
| U | = Supply voltage |
| S | = Signal switch |
| Uc | = Supply voltage to the timer |
| 11-14 | = Self-holding contact |
| | = Output contact |

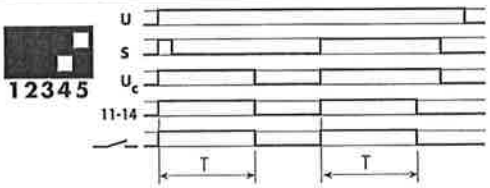


**Signal ON Pulse**
On mometary closure of Signal Switch (S) > 50 ms, the output contacts transfer and remain so (with self-holding on contact 11-14) for the duration of the preset delay, after which they reset.

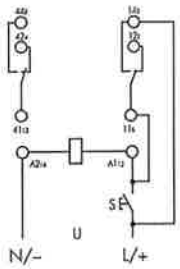

85.02

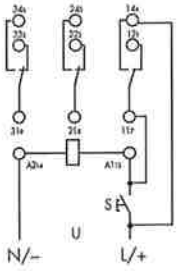

85.03

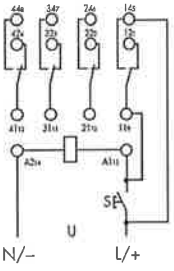

85.04

# 94 Series - Sockets and accessories for 85 series timers

94.04

| Timer type | 85.02 | | 85.03 | | 85.04 | |
|---|---|---|---|---|---|---|
| Colour | BLUE | BLACK | BLUE | BLACK | BLUE | BLACK |
| **Clamp terminal socket:** panel or 35 mm rail (EN 50022) mount | 94.02 | 94.02.0 | 94.03 | 94.03.0 | 94.04 | 94.04.0 |
| Metal retaining clip (supplied with timer) | 094.81 | | | | | |
| 6-way jumper link for 94.02, 94.03 and 94.04 sockets | 094.06 | 094.06.0 | 094.06 | 094.06.0 | 094.06 | 094.06.0 |
| Identification tag | 094.00.4 | | | | | |

Approvals
(according to type):

CE B SP GOST cULus

- Rated values: 10 A - 250 V
- Dielectric strength: ≥ 2 kV AC
- Protection category: IP 20
- Ambient temperature: (-40...+70)°C
- Torque: 0.5 Nm
- Wire strip length: 8 mm
- Max wire size:

| | solid wire | stranded wire |
|---|---|---|
| mm² | 1x6 / 2x2.5 | 1x4 / 2x2.5 |
| AWG | 1x10 / 2x14 | 1x12 / 2x14 |

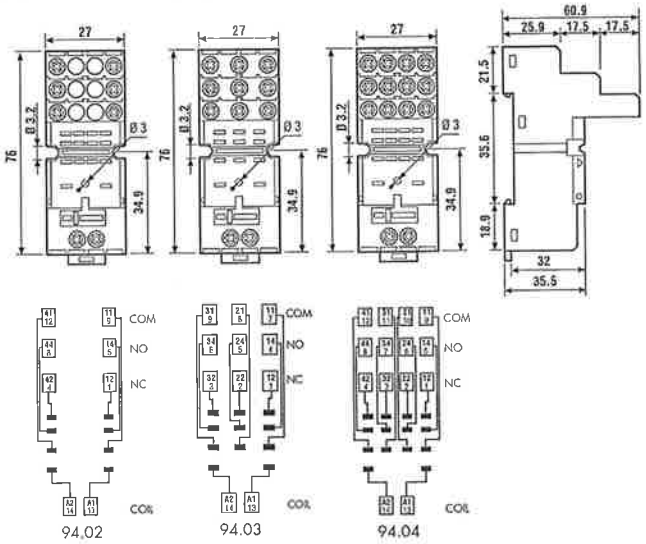


| 6-way jumper link | 094.06 |
|---|---|

- Rated values: 10 A - 250 V

094.06

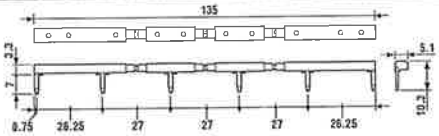


85

94.54.1

| Relay type | 85.02, 85.04 | |
|---|---|---|
| Colour | BLUE | BLACK |
| **Screwless terminal socket:** 35 mm rail (EN 50022) mount | 94.54.1 | 94.54.10 |
| Metal retaining clip | 094.81 | |

Approvals
(according to type):

CE

- Rated values: 10 A - 250 V
- Dielectric strength: ≥ 2 kV AC
- Protection category: IP 20
- Ambient temperature: (-25...+70)°C
- Wire strip length: 7 mm
- Max wire size:

| | solid wire | stranded wire |
|---|---|---|
| mm² | 2x(0.2...1.5) | 2x(0.2...1.5) |
| AWG | 2x(24...18) | 2x(24...18) |

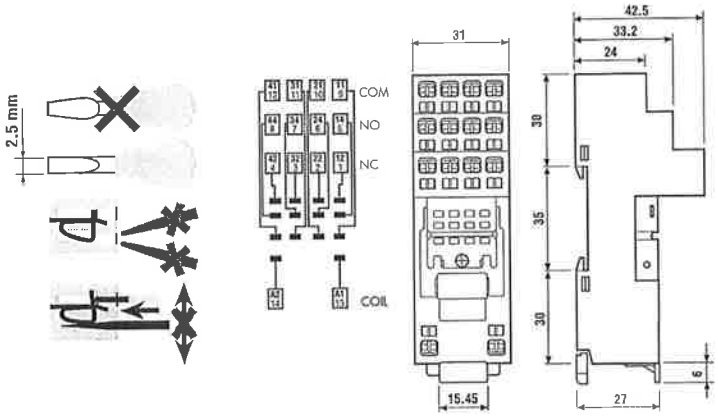

## SYMCOM (ISS-101)

## INTRINSICALLY SAFE RELAY

**Features**

- UL 913 listed.*
- Compact Design
- Finger safe terminals.
- DIN rail or surface mountable.
- LED state indicator.
- Isolated output relay for PLC or control voltage.

MotorSaver

**Model ISS-100**

**Intrinsically Safe Switch**

•

**Engineered Protection**

•

**Made in USA**

The ISS-100 Isolated Switch is UL 913* listed as an associated apparatus for interfacing between hazardous and non-hazardous areas. The ISS-100 must be installed in a non-hazardous area. Follow SymCom's Control Drawing 100 for proper installation.

***Meets all new requirements for UL 913 sixth edition, August 8, 2002!***

FRONT VIEW

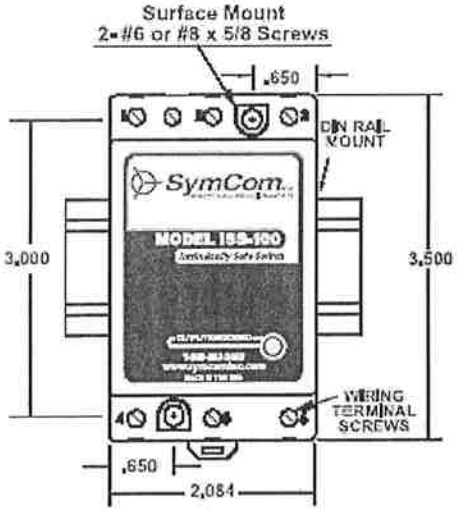


BOTTOM VIEW

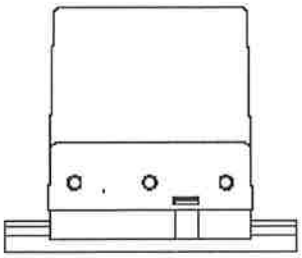

SIDE VIEW

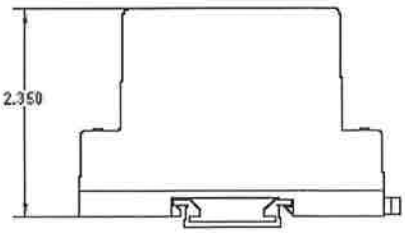

MotorSaver®
THREE-PHASE ELECTRIC MOTOR PROTECTOR

**Specifications**
•
**Operating Points**
•
**Special Options**

# Model ISS-100
## INTRINSICALLY SAFE SWITCH

### SPECIFICATIONS

Supply Voltage ..... 90 - 120 VAC

Relay Output Rating
- General Purpose ..... 8 Amps @ 115 VAC
- Pilot Duty ..... 180 VA @ 115 VAC, C300
- Relay Contact Life (Mechanical) ..... 100,000 cycles min. @ rated load
- Relay Contact Life (Electrical) ..... 10,000,000 cycles

Operating Temperature ..... -20 to 55° C

Weight ..... 8 oz.

Power Consumption ..... 1.5 Watts max.

Wire range ..... 12 to 20 AWG

Terminal Torque ..... 6 in. lbs.

Provides intrinsically safe circuits in the following locations: ..... Class I, Groups A,B,C,D; Class II, Groups E,F,G; and Class III

Entity Parameters ..... $V_{oc}$ = 16.8 V
$I_{sc}$ = 1.6 mA
$L_a$ = 0
$C_a$ = 0

Standards Passed
- Electrostatic Discharge (ESD) ..... IEC 1000-4-2, Level 3, 6kV contact, 8kV air.
- Radio Frequency Immunity (RFI) ..... IEC 61000-4-2, Level 3, 10V/m
- Fast Transients ..... IEC 61000-4-4, Level 3, 4kV input power

SymCom warrants its products against defects in material or workmanship for a period of two (2) years from the date of manufacture. For complete information on warranty, liability, terms, returns, and cancellations, please refer to the SymCom Terms and Conditions of Sale document.

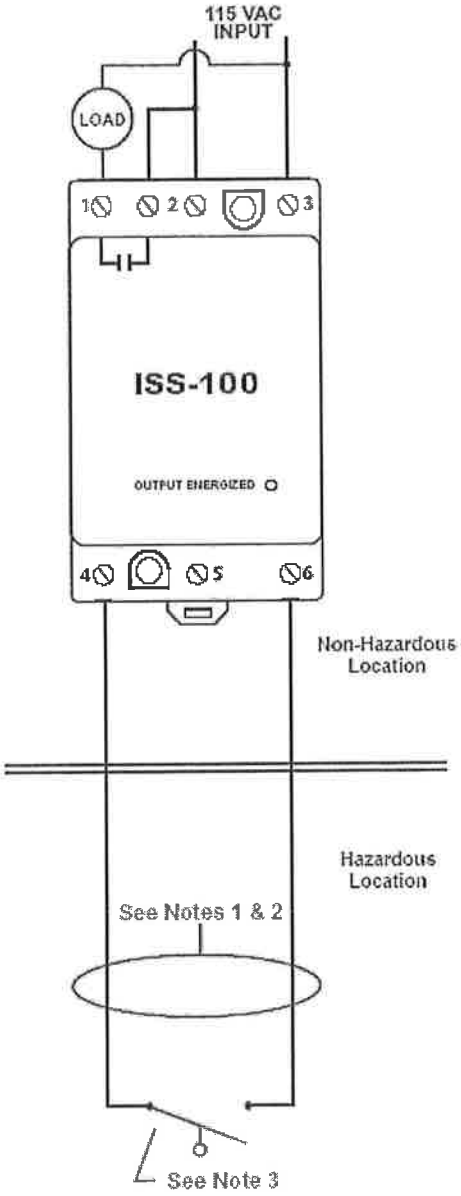


TYPICAL WIRING DIAGRAM

NOTES:
1. Maximum distance between unit and switch contact contact is 10,000 feet.
2. All non-intrinsically safe wiring shall be separated from intrinsically safe wiring per NEC article 500 and ANSI/NFPA 70.
3. All switch contacts shall be non-energy storing, containing no inductance or capacitance.

# PANEL ALARM LIGHT - FLASHING

LX40F - RED, AMBER, GREEN, BLUE, CLEAR

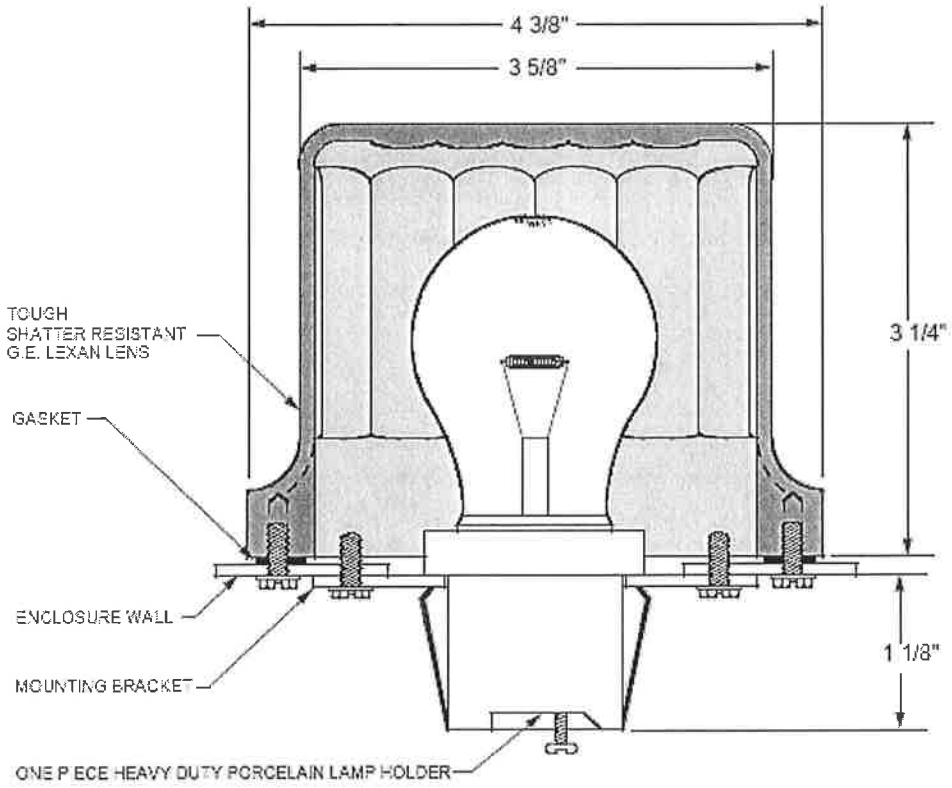


## ENVIRONMENTAL RATINGS

**TYPE 3R, 4, 4X, 12, 13**

- Low profile, top mounted gives 360 visibility
- Easy to install
- Weather proof gasket
- Shatter resistant globe & U.V. Stabilized
- Universial mounting with hardware & instructions
- Colors: Red, Amber, Green, Blue or Clear
- Supplied with 40 Watt clear rough service appliance bulb to withstand temperature changes
- Supplied with Ingram's SSF150W flasher
- Universial mounting with hardware & instructions
- Globe height is 3 1/4" with a Diameter of 4 3/8"
- Flame Retardant

The entire assembly has Underwriters Laboratories, Inc. recognition. (E121431)

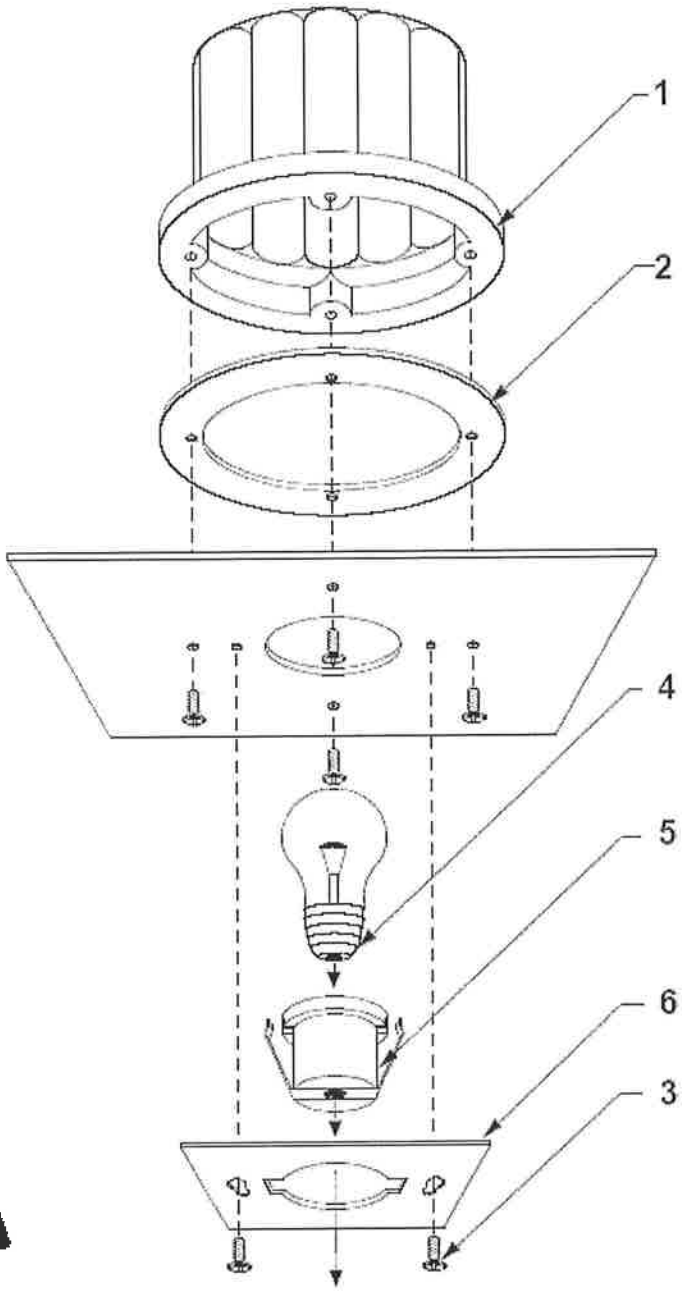


| ITEM | DESCRIPTION |
|---|---|
| 1 | LEXAN ALARM GLOBE - TYPE 943A (Red, Amber, Green or Blue) |
| 2 | CLOSED CELL NEOPRENE GASKET |
| 3 | SLTD. HEX WASHER HD.TAPPING SCREW. 8-32 X 3/8 (6 QTY.) |
| 4 | LIGHT BULB 130V, 40W |
| 5 | LAMP SOCKET, SNAP-IN TYPE H.D. PORCELAIN |
| 6 | SOCKET MTG. PLATE |
| | SSF150W - SOLID STATE FLASHER |

# INGRAM PRODUCTS (AHC-50W)

# ANTI-CONDENSATION SPACE HEATER

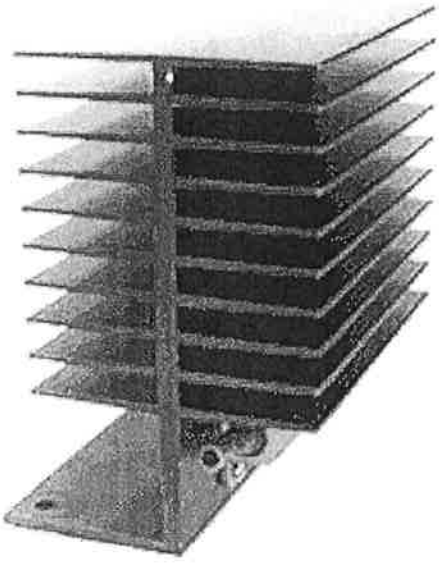

E121431

### *Features*

- UL Recognized, File No. E121431
- Touch Safe, will not burn skin when touched
- Size it right and no thermostat is required
- No moving parts to wear out
- Compact size, small foot print
- Corrosion resistant black anodized finish

### *Specifications*

- Operating Voltage, 120 VAC
- Current Draw:

ACH-15W = .125 amps
ACH-30W = .250 amps
ACH-50W = .417 amps

- Extruded aluminum, black anodized finish
- Life expectancy is 20 years minimum

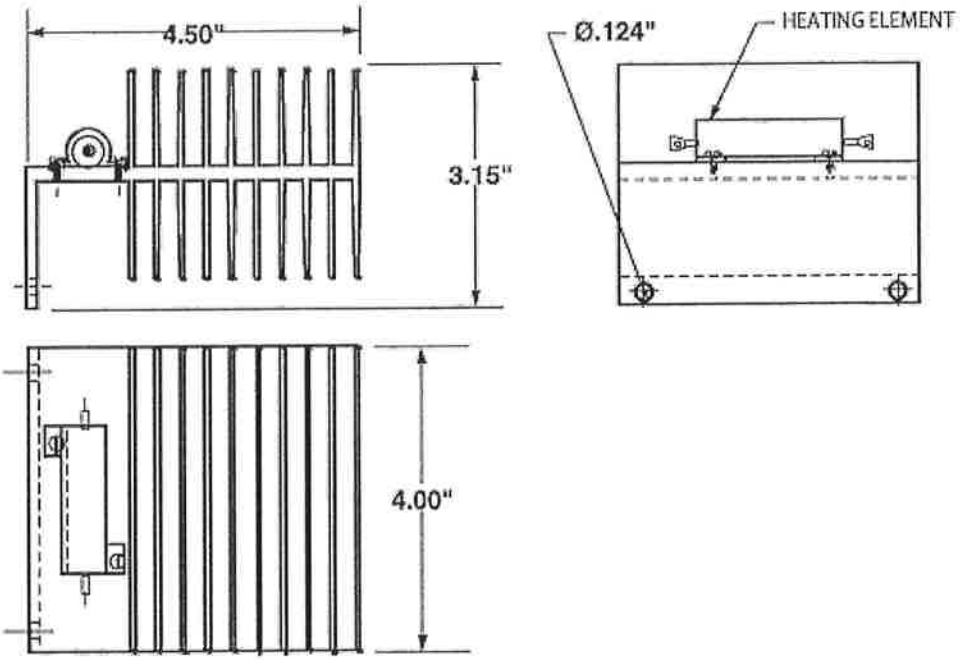


The ACH series anti-condensate space heaters are designed to maintain the temperature inside of an enclosure several degrees above surrounding ambient temperature and above the dew point. This will prevent corrosion inside due to condensation.

# TELECOM / DATACOM / SIGNAL LINE PROTECTION (Multiple Medium)

## PC642 SERIES

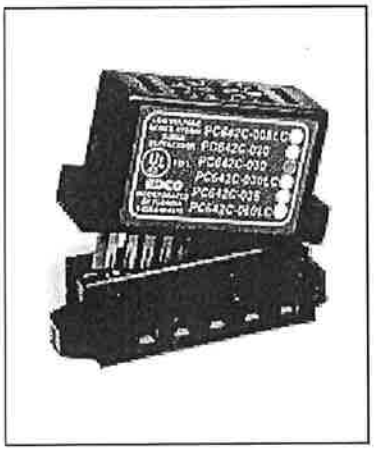

The **PC642 Series** surge suppressor is a dual pair (four wire) module implementing three stage hybrid technology. This module addresses over voltage transients with gas tubes and silicon avalanche components. In addition, sneak and fault currents are mitigated with resettable fuses (PTC's). The PTC's increase resistance several orders of magnitude when overcurrents exceed safe levels. A normal state resumes when overcurrents are removed. The ability to self restore in this manner significantly increases suppressor performance and survivability.

The **PC642** card edge module is gold-plated, double sided and is designed to mate with the **PCB1B** gold-plated female terminal connector. When snapped together, the data circuits "pass thru" the protector in a serial fashion from the four "Field Side" terminals to the four "Electronics Side" terminals. Terminals 1 or 10 of the **PCB1B** must be attached to Building Approved ground per EDCO *TECHNICAL BULLETIN* # 2015.

## FEATURES

- Lightning Protection for Low Voltage Data Signal Lines
- Three-Stage Protection
- Sneak/Fault Current Protection
- Resettable Fusing - PTC's
- Low Capacitance Option *
- Plug-in Module
- Fast Response Time
- UL 497B Listed

UL® 497B

## SPECIFICATIONS

Peak Surge Current (10 times):
- 8 x 20µs..... 10kA
- 10 x 700µs..... 500A per line

Life Expectancy:
- 8 x 20µs (2000A)..... >100 occurrences
- 10 x 700µs (400A)

Response Time..... <1 nanosecond
Voltage Clamp ..... 8, 15, 20, 30, 36, 43, 50, 60 or 200
Technology..... SAD Hybrid
Resistance (depending on model)..... 4.7W to 15W per line
Capacitance (average):
- Standard models..... 1500pf
- Low Capacitance models..... 50pf

Operating Temperature..... -40°C to +85°C
Weight..... 2.0 oz.
Dimensions PC642 & PCB1B:
- HxWxL..... 1.8" x 1.0" x 2.4"

**Caution:** The hybrid design of this product includes series resistance. Do not place this product in service on any signal line capable of supplying more than 150 milliamperes continuously.

* Wire wound resistors are used instead of "PTC's" on low capacitance models (PC642C-_ _ _ LC) and models clamping above 60 volts (PC642C-200, 200D, 200X, 200LC).

## TERMINAL ASSIGNMENTS

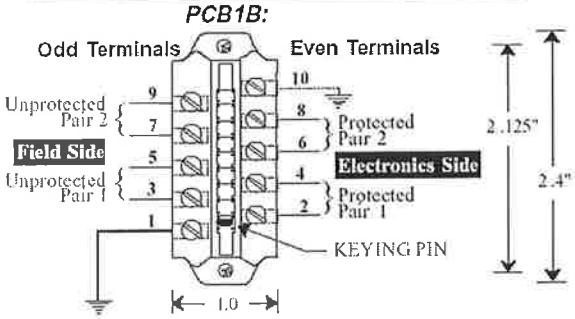


Ground Terminal 1 or 10 to Building Approved Ground

## ORDERING INFORMATION

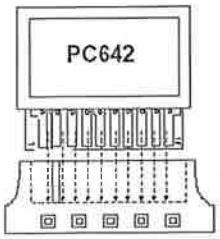


**APPLICATION:**

| | |
|---|---|
| RS485, RS422: | PC642C-008LC & PCB1B |
| RS423, Token Ring: | PC642C-008LC & PCB1B |
| RS232 | PC642C-020 & PCB1B |
| E-NET, 10 BASE T: | PC642C-0301.C & PCB1B |
| 4-20 ma: | PC642C-036 & PCB1B |
| Telephone (C.O. line): | PC642C-200 & PCB1B |
| Telephone T1 Data: | PC642C-060LC & PCB1B |

PC642C - [ ][ ][ ][ ]

VOLTAGE CLAMP

| | | | |
|---|---|---|---|
| 8 Volts | 0 | 0 | 8 |
| 15 Volts | 0 | 1 | 5 |
| 20 Volts | 0 | 2 | 0 |
| 30 Volts | 0 | 3 | 0 |
| 36 Volts | 0 | 3 | 6 |
| 43 Volts | 0 | 4 | 3 |
| 50 Volts | 0 | 5 | 0 |
| 60 Volts | 0 | 6 | 0 |
| ♦ *300 Volts | 2 | 0 | 0 |

| | |
|---|---|
| | no suffix<br>stage 2 clamp<br>each line-to-ground |
| D | stage 2 clamp<br>line-to-line only |
| X | stage 2 clamp<br>line-to-line and each line to ground |
| LC | low capacitance option<br>stage 2 clamp<br>line-to-line and each line to ground<br>(see note: ♦) |

* Not UL Listed

# STAHL (9001/01-280-165-10)

# INTRINSICALLY SAFE BARRIER

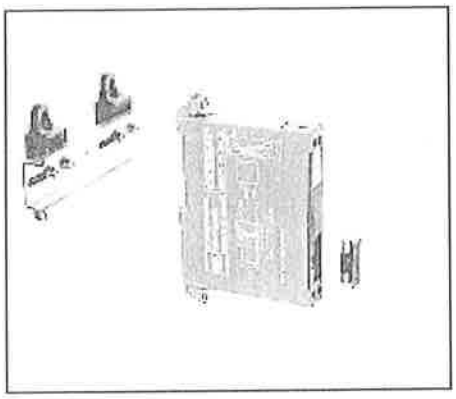

Exploded view of a Type 9001 single channel barrier showing 35mm DIN rail, barrier, replaceable fuse, and label holder.

## Series 9000 INTRINSPAK Intrinsic Safety Barrier

One Step, Snap-On 35mm DIN Rail Mounting and Grounding
... eliminates external ground bars, wiring, tools, and adaptors.

Patented Replaceable 160mA Fuse
... provides overvoltage and reverse polarity protection.

Lowest Internal Resistance
... reduces circuit loading problems.

Common ½" Wide Housing for Single and Dual Channel Versions
... easily accessible terminals.

Short-Circuit Proof Connections
... prevents blown fuses when field wiring is shorted.

Approvals to Worldwide Standards
... FM, UL, CSA, PTB (CENELEC), MSHA, SA and others

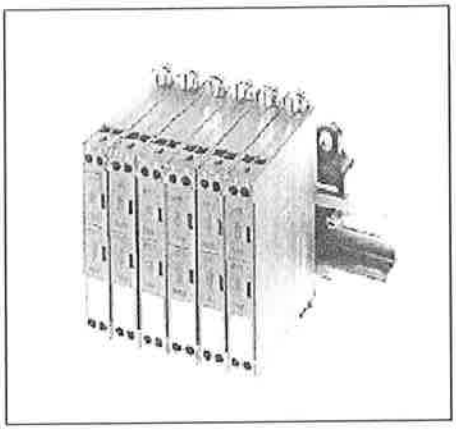

Multiple barriers mounted to 35mm DIN Rail. Each barrier occupies 1/2" of rail space. Once mounted the barrier forms an electrical connection with the rail which now serves as the intrinsic safety ground bus.

## General Description

First introduced in 1991, the Series 9000 INTRINSPAK has quickly become the industry standard for intrinsic safety barrier design. Within the series the user can choose from the Type 9001 single channel, Type 9002 dual channel, or for applications requiring up to ¾W of power, the Type 9004 single channel with electronic current limitation.

All three types share a common ½" wide housing which snaps directly to a 35mm DIN rail. Once mounted, an electrical connection is formed between the barrier and the rail. This rail now serves as the intrinsic safety ground bus when connected to the designated grounding point. Two additional ground lugs are provided and may be used as a redundant grounding method or for terminating shields.

Each barrier also contains a replaceable 160mA fuse cartridge for each channel. This fuse is located within the front faceplate and protects the barrier from pole reversal and voltage spikes at the input side (terminals 1 and 2). Unlike other safety barrier designs, this fuse will not blow should the field wiring be shorted to ground.

Safety barriers are polarity sensitive devices therefore they are available in +DC, -DC, and AC voltage ratings. They also contain an internal resistance which may cause loading problems in some applications. STAHL safety barriers have been designed to minimize this resistance and offer the lowest available ratings in the industry.

Many voltage and resistance value combinations are available within the Series 9000 INTRINSPAK. However, most instrumentation applications can be handled by no more than four models. Refer to the Program Overview on page 5 for a complete listing.

## Electrical Specifications

*The following are common characteristics of the Types 9001, 9002, and 9004 safety barriers.*

| | | |
|---|---|---|
| Rated Voltage | | Refer to tables |
| Rated Current | | Refer to tables |
| Replaceable Fuse Rating | | 160mA per channel |
| Pole Reversal Protection | | Protected by replaceable fuse |
| Current Limitation | *Type 9001* | Resistive |
| | *Type 9002* | Resistive |
| | *Type 9004* | Electronic |
| Leakage Current | | 1µA unless stated otherwise<br><2mA for 9004/5. |
| Temperature Effect | | <0.25%/10K |
| Short Circuit Proof | | Yes, unless stated otherwise |
| Frequency Range | *Type 9001* | 100kHz @ $I_{\infty}$ > 50mA<br>50kHz @ $I_{\infty} \leq$ 50mA |
| | *Type 9002* | 100kHz @ $I_{\infty}$ > 50mA<br>50kHz @ $I_{\infty} \leq$ 50mA |
| | *Type 9004* | 10kHz |
| Grounding Method | | Through mounting platform (NS35/15). |

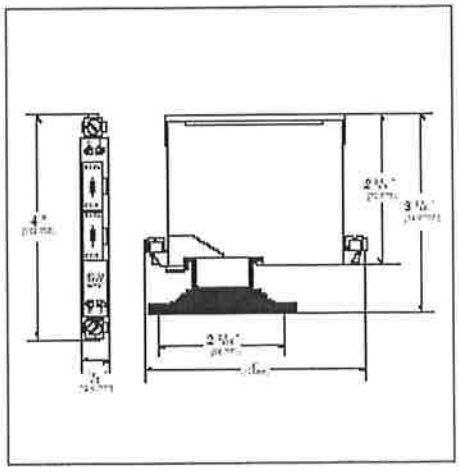

Dimensions of the Series 9000 INTRINSPAK intrinsic safety barrier. All types share a common 1/2" wide housing.

## Environmental Specifications

| | |
|---|---|
| Vibration Frequency | 55Hz |
| Vibration Amplitude | ± 0.2" (± 5mm) |
| Shock Resistance | 20g |
| Operating Temp. Range | -4° to +140°F (-20°C to +60°C) |
| Storage Temp. Range | -40° to +167°F (-40°C to +75°C) |
| Relative Humidity Range | To 95%, no condensation |

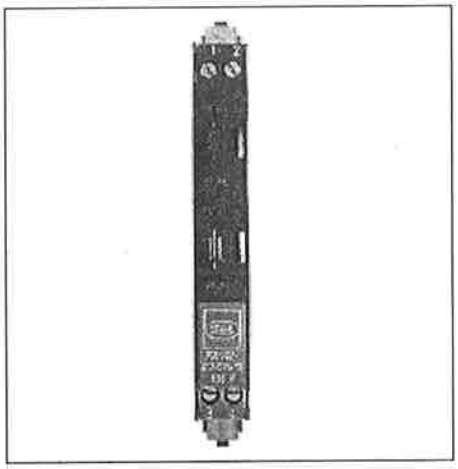

Top view of safety barrier showing screw terminal connections for both safe and hazardous area terminations. The replaceable fuses are contained in recessed compartments and are interchangeable with all Series 9000 INTRINSPAK.

## Mechanical Specifications

| | |
|---|---|
| Mounting Method | NS35/15 DIN Rail (Standard)<br>Surface Mount (with adaptor) |
| Mounting Location | Nonhazardous or Class I, Div. 2 location |
| Mounting Orientation | any |
| Housing Material | Polyamide |
| Degree of Protection | IP40 to IEC 529 |
| Flame Resistance Rating | HB to UL94 |
| Weight | 0.22 lbs. (100grams) |
| Screw Terminal Size | Four #14 AWG (1.5mm²) captured, self-opening<br>Two #12 AWG ( 4.0 mm² ) for ground and shield |

## Test Certificates

| | FM | UL | CSA | CENELEC |
|---|---|---|---|---|
| Type 9001 | J.I. 3T9A1.AX | E 81680 | LR43394 | Ex-91.C.2046X |
| Type 9002 | J.I. 3T9A2.AX | E 81680 | LR43394 | Ex-91.C.2045X |
| Type 9004 | J.I. 3T9A3.AX | E 81680 | LR43394 | Ex-92.C.2013X |

*Contact R. STAHL for other agency approval status, i.e. SA, MSHA, JIS, CIS.*

9001/01 Positive Potential DC

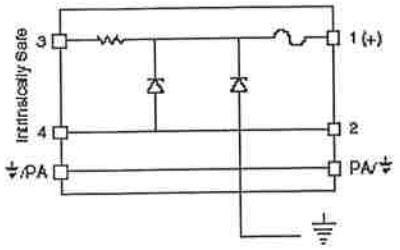


9001/00 Negative Potential DC

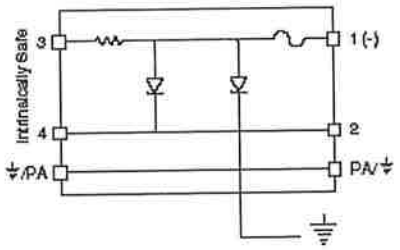


| Part Number | Operational Specifications | | | | Safety Parameters to FM 3610 Standard | | | | |
|---|---|---|---|---|---|---|---|---|---|
| | Channel Number | Voltage Range (V) | Internal Resistance (Ω) | Short-circuit Proof @ Rated Voltage | I.S. Connections for Class I, II, III | Open Circuit Voltage $V_{oc}$ (V) | Short Circuit Current $I_{sc}$ (mA) | Max. Power Transfer $P_T$ (W) | Allowed Capac. A, B $C_a$ (µF) |
| 9001/a-199-010-10 | 1 | 16...18 | 2220 | yes | A-G | 19.9 | 9.1 | 0.045 | 0.34 |
| 9001/a-199-020-10 | 1 | 16...18 | 1218 | yes | A-G | 19.9 | 16.6 | 0.082 | 0.34 |
| 9001/a-199-038-10 | 1 | 16...18 | 570 | yes | A-G | 19.9 | 37.4 | 0.186 | 0.34 |
| 9001/a-199-050-10 | 1 | 16...18 | 440 | yes | A-G | 19.9 | 48.7 | 0.242 | 0.34 |
| 9001/a-199-100-10 | 1 | 16...18 | 230 | yes | A-G | 19.9 | 95.2 | 0.473 | 0.34 |
| 9001/a-199-150-10 | 1 | 16...18 | 160 | yes | A-G | 19.9 | 139.6 | 0.694 | 0.34 |
| 9001/a-199-270-10 | 1 | 16...18 | 90 + 0.7V | yes | A-G | 19.9 | 268.8 | 1.33 | 0.34 |
| 9001/a-199-390-10 | 1 | 16...18 | 67 + 0.7V | yes | C-G | 19.9 | 382.7 | 1.89 | ---- |
| 9001/a-252-070-10 | 1 | 20...22 | 400 | yes | A-G | 25.2 | 68.0 | 0.428 | 0.18 |
| 9001/a-280-020-10 | 1 | 24...26 | 1510 | yes | A-G | 28.0 | 19.6 | 0.137 | 0.14 |
| 9001/a-280-050-10 | 1 | 24...26 | 630 | yes | A-G | 28.0 | 47.5 | 0.332 | 0.14 |
| 9001/a-280-075-10 | 1 | 24...26 | 440 | yes | A-G | 28.0 | 68.5 | 0.479 | 0.14 |
| 9001/a-280-085-10 | 1 | 24...26 | 356 | yes | A-G | 28.0 | 84.1 | 0.588 | 0.14 |
| 9001/a-280-100-10 | 1 | 24...26 | 302 | yes | A-G | 28.0 | 100.0 | 0.70 | 0.14 |
| 9001/a-280-110-10 | 1 | 24...26 | 277 | yes | A-G | 28.0 | 109.1 | 0.763 | 0.14 |
| 9001/a-280-165-10 | 1 | 24...26 | 187 | yes | C-G | 28.0 | 163.7 | 1.14 | ---- |
| 9001/a-280-280-10 | 1 | 24...26 | 124 + 0.7V | yes | C-G | 28.0 | 267.8 | 1.87 | ---- |
| 9001/a-398-050-10 | 1 | 36...38 | 920 | yes | A-G | 39.9 | 46.2 | 0.460 | 0.07 |

NOTE: Where a = 00 for negative potential DC, 01 for positive potential DC

9001/01-199-270-10 Positive Potential DC
9001/01-199-390-10 Positive Potential DC
9001/01-280-280-10 Positive Potential DC

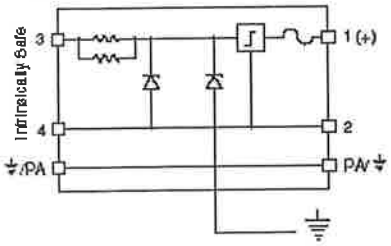


9001/00-199-270-10 Negative Potential DC
9001/00-199-390-10 Negative Potential DC
9001/00-280-280-10 Negative Potential DC

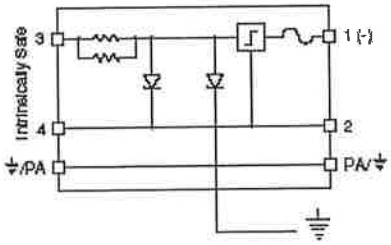


| FM 3610 Standard | | | | | CSA C22.2 No.157 | | CENELEC EN50 020 | | | | | | |
|---|---|---|---|---|---|---|---|---|---|---|---|---|---|
| Allowed Capac. C, E $C_a$ (µF) | Allowed Capac. D, F, G $C_a$ (µF) | Allowed Induct. A, B $L_a$ (mH) | Allowed Induct. C, E $L_a$ (mH) | Allowed Induct. D, F, G $L_a$ (mH) | Open Circuit Voltage $V_{oc}$ (V) | Minimum Resistance $R_{Min}$ (Ω) | Max. Power Transfer $P_T$ (W) | Open Circuit Voltage $U_Z$ (V) | Short Circuit Current $I_M$ (mA) | Allowed Capac. IIC $C_a$ (µF) | Allowed Capac. IIB $C_a$ (µF) | Allowed Induc. IIC $L_a$ (mH) | Allowed Induc. IIB $L_a$ (mH) |
| 1.00 | 2.70 | 382.2 | 1000 | 1000 | 19.9 | 2210 | 0.045 | 19.9 | 10 | 0.2 | 1 | 330 | 1000 |
| 1.00 | 2.70 | 117.9 | 421 | 1000 | 19.9 | 1210 | 0.082 | 19.9 | 20 | 0.2 | 1 | 90 | 330 |
| 1.00 | 2.70 | 24.2 | 90.0 | 201 | 19.9 | 560 | 0.186 | 19.9 | 38 | 0.2 | 1 | 23 | 87 |
| 1.00 | 2.70 | 14.4 | 54.4 | 119.0 | 19.9 | 430 | 0.242 | 19.9 | 50 | 0.2 | 1 | 15 | 56 |
| 1.00 | 2.70 | 3.90 | 15.2 | 31.4 | 19.9 | 220 | 0.473 | 19.9 | 100 | 0.2 | 1 | 4 | 15 |
| 1.00 | 2.70 | 1.60 | 7.3 | 14.6 | 19.9 | 150 | 0.694 | 19.9 | 150 | 0.2 | 1 | 1.3 | 7 |
| 1.03 | 2.76 | 0.23 | 2.1 | 4.0 | 19.9 | 77.6 | 1.33 | 19.9 | 270 | 0.2 | 1.0 | 0.23 | 2.2 |
| 1.03 | 2.76 | ----- | 0.9 | 2.0 | 19.8 | 54.5 | 1.89 | 19.9 | 390 | ----- | 1.0 | ----- | 0.8 |
| 0.55 | 1.50 | 7.50 | 28.9 | 61.3 | 25.2 | 390 | 0.428 | 25.2 | 70 | 0.09 | 0.58 | 7.5 | 28 |
| 0.43 | 1.14 | 85.0 | 306 | 725 | 28.0 | 1500 | 0.137 | 28 | 20 | 0.07 | 0.5 | 90 | 330 |
| 0.43 | 1.14 | 15.1 | 57.0 | 125 | 28.0 | 620 | 0.332 | 28 | 50 | 0.07 | 0.5 | 15 | 56 |
| 0.43 | 1.14 | 7.40 | 28.4 | 60.4 | 28.0 | 430 | 0.479 | 28 | 75 | 0.07 | 0.5 | 6.7 | 25 |
| 0.43 | 1.14 | 5.00 | 19.3 | 40.2 | 28.0 | 349 | 0.588 | 28 | 85 | 0.07 | 0.5 | 5.5 | 20 |
| 0.43 | 1.14 | 3.60 | 13.9 | 28.5 | 28.0 | 300 | 0.70 | 28 | 100 | 0.07 | 0.5 | 4 | 15 |
| 0.43 | 1.14 | 3.00 | 11.7 | 23.9 | 28.0 | 270 | 0.763 | 28 | 110 | 0.07 | 0.5 | 3 | 12 |
| 0.43 | 1.14 | ----- | 5.40 | 10.7 | 28.0 | 180 | 1.14 | 28 | 165 | ----- | 0.5 | ----- | 5.5 |
| 0.43 | 1.14 | ----- | 2.1 | 4.0 | 28.0 | 110 | 1.87 | 28 | 280 | ----- | 0.5 | ----- | 2.0 |
| 0.20 | 0.52 | 16.0 | 60.3 | 132.6 | 39.9 | 910 | 0.460 | 39.8 | 50 | 0.03 | 0.26 | 15 | 56 |

# MODEL 4042

# Liquid Level Controller

- Level simulator control
- Pressure transducer socket
- Output voltage for probe supply
- 4 adjustable setpoints with relay outputs
- LCD level display with zero and span adjustments

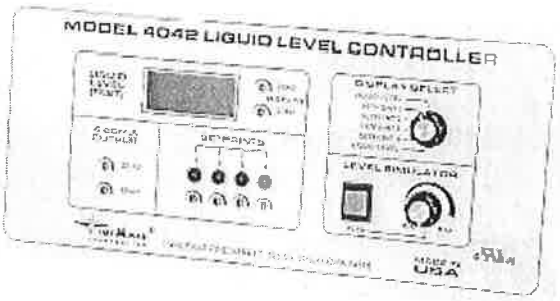


## DESCRIPTION

The Model 4042 Liquid Level Controller monitors, displays and controls water level up to 34.6 feet, in a tank or reservoir.

The Model 4042 operates from the 4-20*ma* input signal provided by the Time Mark Model 450 Pressure Transducer. This 4-20*ma* signal represents the water level to be controlled, where 4*ma* equals zero feet, and 20*ma* equals 34.6 feet. A liquid crystal display (LCD) is provided to show the water level during normal operation, and the setpoint values during calibration.

There are four user-adjustable trip setpoints. As the water level rises above each trip point setting, the front panel LED for that level illuminates, and the corresponding output relay energizes.

A 4-20*ma* output, which tracks the 4-20*ma* input, is also provided. This signal output can be re-scaled to different ranges of level by the user. A test control, that simulates an input signal, is available on the front panel. The test control is useful for checking the trip setpoints, and overall system operation.

## SPECIFICATIONS

| MODEL | 4042 |
|---|---|
| Input voltage | 120vac, ± 10% |
| Power consumption | 6 watts maximum |
| Signal input | 4-20*ma* (optional 0-5v), 2 or 3 wire |
| Signal input load | 250Ω maximum |
| Dead band | 1% of full scale |
| Repeat accuracy | ± 1% of scaled maximum (fixed conditions) |
| Display type | 3-1/2 digit liquid crystal display |
| Display range | 00.0 to 34.6 w/4-20*ma* input (factory set; user-adjustable) |
| Display resolution | 1 decimal place (factory set; user-adjustable) |
| Contacts | 4 SPDT |
| Contact rating | 10A at 240vac resistive<br>4A at 120vac inductive |
| Signal output | Output is factory set to track the 4-20*ma* input. zero and span adjustments are provided: as little as a 2*ma* change can cause a full swing of the output |
| Signal output load | 300Ω maximum |
| Probe supply voltage | 24vdc regulated |
| Trip levels | 4 setpoints, user-adjustable |
| Operating temperature | +14° to +122° F |
| Humidity tolerance | 0-97% w/o condensation |
| Enclosure material | front panel - 18 gauge steel<br>rear panel - 20 gauge steel |
| Termination | removable terminal strips |
| Weight | 5.5 pounds |
| Agency Approvals | UL Recognized (U.S. & Canadian) |

## DIMENSIONS

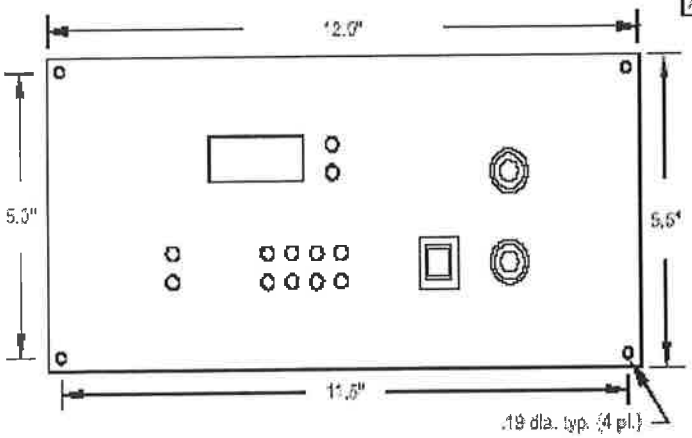


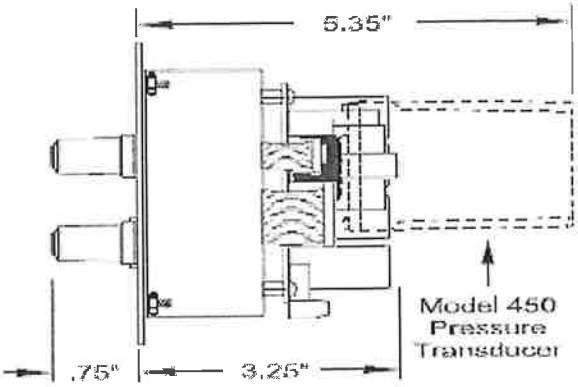

READ ALL INSTRUCTIONS BEFORE INSTALLING, OPERATING OR SERVICING THIS DEVICE.
KEEP THIS DATA SHEET FOR FUTURE REFERENCE.

## GENERAL SAFETY

**POTENTIALLY HAZARDOUS VOLTAGES ARE PRESENT AT THE TERMINALS OF THE MODEL 4042.**
**ALL ELECTRICAL POWER SHOULD BE REMOVED WHEN CONNECTING OR DISCONNECTING WIRING.**
**DO NOT EXCEED THE OUTPUT OR INPUT RATINGS, AS STATED IN THE SPECIFICATIONS.**
**PROTECT THE UNIT WITH PROPERLY RATED FUSES.**
**DO NOT INSTALL IN DAMP OR MOIST AREAS.**
**THIS DEVICE SHOULD BE INSTALLED AND SERVICED BY QUALIFIED PERSONNEL.**

# Installation Instructions

## Front Panel Controls

*figure 1*

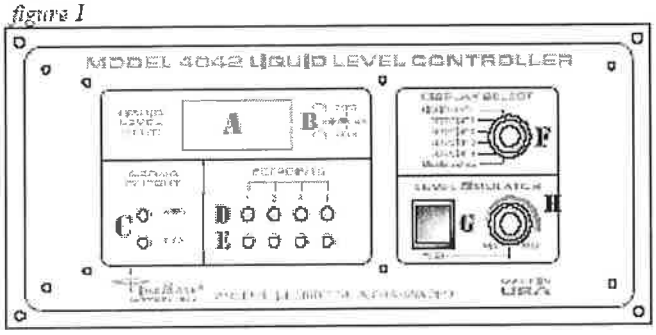


A 3-1/2 DIGIT LCD INDICATOR - SHOWS LIQUID LEVEL IN FEET

B ZERO AND SPAN ADJUSTMENTS FOR THE DISPLAY

C ZERO AND SPAN ADJUSTMENTS FOR 4-20ma OUTPUT SIGNAL

D INDICATOR LEDs - SHOW WHEN SETPOINT IS REACHED (ONE PER SETPOINT)

E SETPOINT ADJUSTMENT POTENTIOMETERS

F DISPLAY SELECT SWITCH - USED TO DISPLAY LIQUID LEVEL OR TRIP POINT SETTINGS

G PUSH BUTTON - ENABLES SIMULATED LEVEL CHANGE

H SIMULATES LIQUID LEVEL CHANGE (WITH OR WITHOUT INPUT SIGNAL) WHEN BUTTON G IS PRESSED. THE 4-20ma OUTPUT IS ALSO AFFECTED.

*figure 2 (rear view of board)*

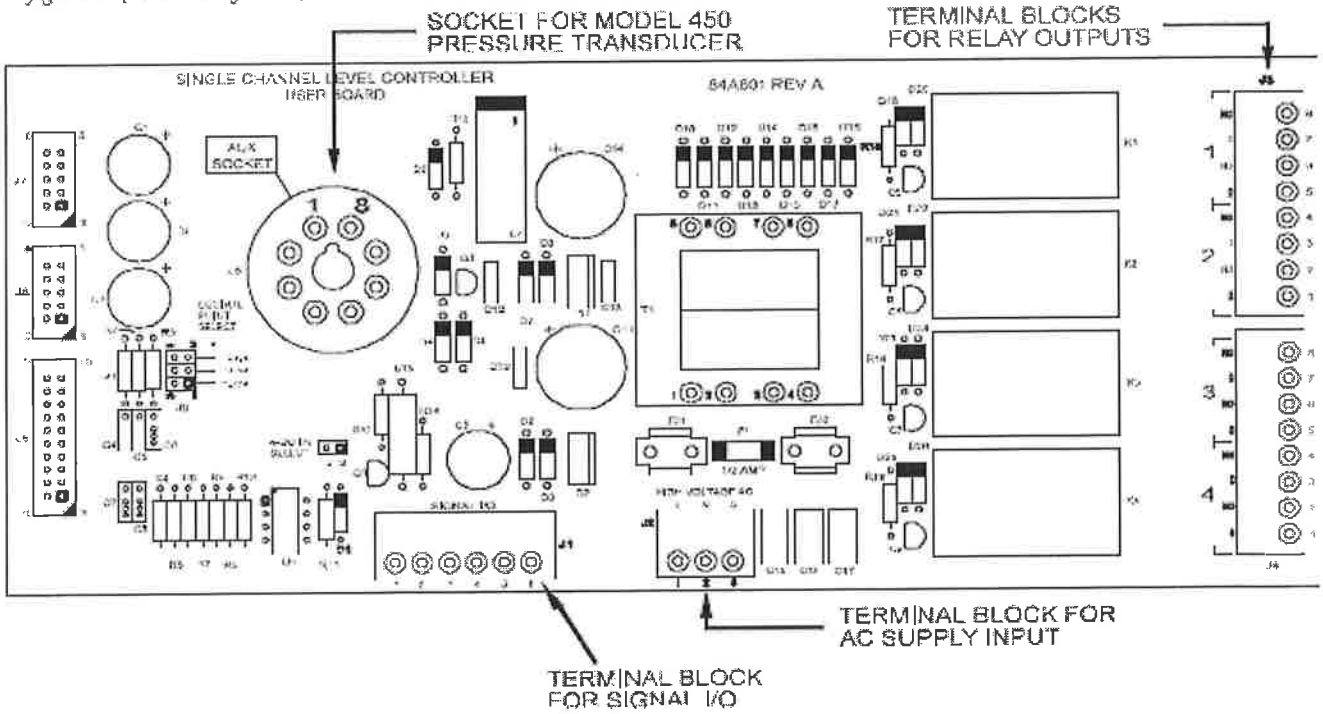

## Mounting & Wiring

Mount the **Model 4042 Liquid Level Controller** in a suitable enclosure.

Referring to the terminal block decals on the unit, and in *figure 2*, make the following connections:

OPERATING POWER - Terminal Block J2 (AC POWER IN)

Connect a chassis ground to the terminal marked G. Connect 120vac operating power to terminals marked 'L' (line) and 'N' (neutral).

SIGNAL INPUT - Terminal Block J1

With a **Model 450 Pressure Transducer plugged into the AUX SOCKET** on the back of the Model 4042, the 4-20*ma* input terminals are not used. External wiring connections are not required.

With a **Model 450 Pressure Transducer remotely mounted** *(figure 3 below )*, connect the +24VDC OUT terminals to the voltage input of the Model 450. Connect the 4-20*ma* IN terminals to the loop terminals of the Model 450. Observe polarity of the connections ("+" to 4-20*ma*, "—" to GND).

*figure 3*

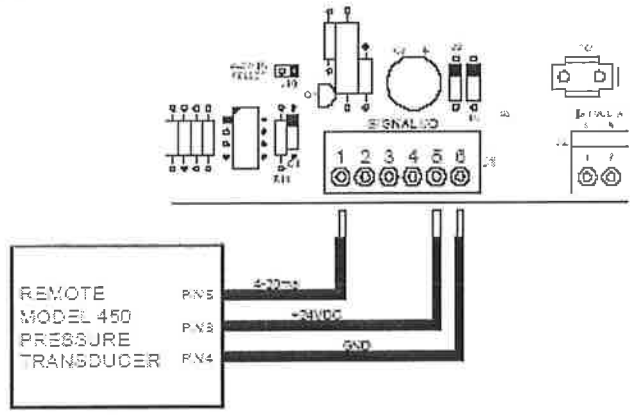


### Advanced Procedures

If you use a 24vdc 2-wire transducer (pressure, ultra-sonic, etc.) connect it between the '+' terminal of the +24vdc OUT and the '+' terminal of the 4-20*ma* IN, see *figure 4*.

SIGNAL OUTPUT - Terminal Block J1

The 4-20*ma* OUT terminals may be connected to a remote monitoring loop, a remote display, or for other purposes. Connect these terminals as required for your application. Observe polarity of the connections.

*figure 4*

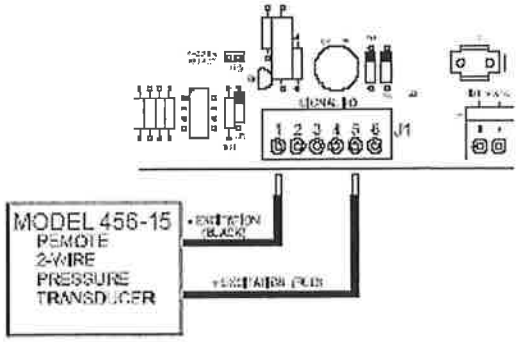


RELAY OUTPUTS - Terminal Blocks J3 and J4

SPDT contacts are provided for each of the four setpoints. These relay contacts can be used to control pump motors, alarm circuits, or as inputs to a Model 403 Liquid Level Controller. Make wiring connections, as required.

DISPLAY RESOLUTION

The Model 4042 is factory set to display liquid level to one decimal place (i.e.,123.4). This default should be acceptable for most applications.

### Advanced Adjustments

If the application requires, the number of decimal places can be changed to zero, two or three places by moving a jumper (J9), on the pc board of the controller *(figure 5)*. For '0' decimal places, remove the jumper *(store the jumper connector on a single pin, so it doesn't get lost)*.

*figure 5*

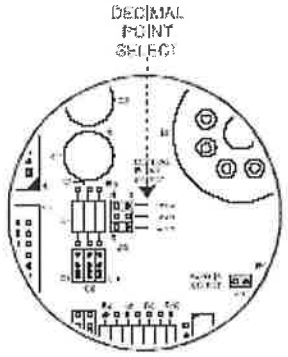


TRANSDUCER CONNECTION

Connect the 3/16" i.d. tubing to the INPUT air supply fitting on the Model 450 Pressure Transducer. Connect the other end of the tubing to the air compressor, at the tank or well. There should be no connection to the REFERENCE input on the Model 450.

Apply operating power to the Model 4042 Controller, and proceed to make the calibration adjustments.

## Display ZERO and SPAN Adjustments

For most applications, these controls do not need to be adjusted. The Model 4042 will display any range from 00.0 to 34.6 feet of depth, and is factory set for this range (i.e., 4*ma* equals 00.0 feet, and 20*ma* equals 34.6 feet). For levels less than 34.6 feet, the display will still show the correct level.

### Advanced Adjustments

*If your Model 4042 Controller application does not require any adjustments to the factory setting described above, skip this section and go on to the 4-20ma* ***Output Zero & Span*** *Adjustments section.*

If it is necessary to make adjustments, for other transducers, or for liquids other than water, the Model 4042 Controller has a wide display range (-600 to 1999).

If you are monitoring a 20 foot level, the Model 4042 will show 20.0 feet, with an input of approximately 12*ma*. With a different transducer, however, it will be necessary to re-calibrate the display to accurately show the correct depth. If care is taken, accuracy of 1% or better is possible. An accurate 4-20*ma* source is required.

Before going on with the adjustment procedures, several critical areas must be thoroughly understood. At this point in the instructions, decimal points will be ignored *(until you know the possible resolution, you won't know where to set the decimal selector).*

First, the largest number possible on the LCD display is 1999 (the left most digit will only show a "1" or a blank).

Second, the difference between the minimum and maximum values to be displayed is the **span**. The Model 4042 Controller has a span range of 250 to 2600 counts. The difference between your minimum and maximum values must fall within this range; i.e. your application's span must be at least 250 count, but not over 2600 counts. Once you have this information, you can determine how many decimal places to select. The following are some examples:

1. You use a transducer with a 20*ma* output equaling 15 feet of liquid. The difference between 0 and 15, is 15 counts, well below the minimum of 250 counts. Add a zero to each number; now the span is 150 counts, still below the minimum. Add another zero, and you now have a span of 1500 counts, well within the span range. Now, you can see that the decimal must be set for two places,for a resolution of 1/100th of a foot, or 15.00.
2. You use a transducer with a 20*ma* output equaling 25 feet. The span is only 25, so a zero is added to the count. The span is now 250, which meets the minimum span. Select one decimal place (25.0). Notice that adding another zero gives you a count of 2500, which also falls within the span range; however, you cannot place the decimal at two places (25.00) because the LCD display can only show up to 1999 (19.99).
3. You use a transducer with a 20*ma* output equaling 20 feet. The span is 20, so you must add a zero. A span of 200 still does not meet the minimum of 250, so add another zero for a span of 2000. This falls within the acceptable span range; however, as stated above, the maximum LCD display is 1999. Therefore, the decimal selector must be set to two places, or 19.99. This means that your display will be short of 20 feet by 1/100th of a foot, which should be sufficient in most any application.

Now let's look at the actual adjustment procedure.

The DISPLAY ZERO control sets the lowest number you want the LCD display to read. This number will be displayed when the transducer input is at 4*ma*. While usually zero *(the factory default)*, this number can be as low as -600, or as high as 1749.

The DISPLAY SPAN control sets the highest number you want the display to read. This number will be displayed when the transducer input is 20*ma*. This number is factory set to 34.6, but can be set as high as 1999, or as low as -350 *(assuming a one decimal place display setting)*.

Application example: Display level in a 5 foot tank, when 4*ma* equal 0 feet, and 20*ma* equals 5 feet.

1. Using methods previously described in this section, the span is determined to be 500. Set the decimal selector to two places, for a resolution of 5.00.
2. Set the DISPLAY SELECT knob to LIQUID LEVEL (either position).
3. Apply a 4*ma* signal to the input. Adjust the DISPLAY ZERO control for a 0.00 reading.
4. Apply a 20*ma* signal to the input. Adjust the DISPLAY SPAN control for a 5.00 reading.
5. Repeat steps 3 and 4 as needed to fine-adjust the display reading. It may be necessary to repeat the steps several times to achieve maximum accuracy.

## 4-20ma ZERO & SPAN Adjustments

The 4-20*ma* output is proportional to, and independent from, the input signal. This allows for very accurate remote monitoring of level changes. The factory default is for the output to track the input; that is, a 4*ma* signal represents 00.0 feet, and a 20*ma* signal represents 34.6 feet. However, the output can be zeroed and spanned to a specific range, not necessarily the same as the reading on the LCD display *(see Advanced Adjustments)*.

### Advanced Adjustments

*If your Model 4042 Controller application does not require any adjustments to the factory settings described above, skip this section and go on to the Setpoint Adjustments section.*

The 4-20*ma* output can be zeroed and spanned to a specific range, not necessarily the same as the reading on the LCD display. As an example; with the default input setting (00.0 to 34.6), a 2*ma* input variation can be expanded to a full 20*ma* output variation. The maximum allowable output current is 30*ma*. An accurate 4-20*ma* source, and a multimeter (digital for highest accuracy), are required to adjust this setting.

***CAUTION: The output can go HIGHER THAN 30ma, but doing so WILL DAMAGE THE CONTROLLER. Care must be taken to limit the output to the 30ma maximum.***

To make adjustments to the default ZERO and SPAN output:

1. Connect the multimeter to the "+" and "-" 4-20*ma* output terminals. Set the multimeter to read DC current.
2. Apply a 4*ma* current to the transducer input terminals, and adjust the 4-20*ma* output ZERO CONTROL until the desired minimum output current is shown on the multimeter.
3. Change the 4*ma* input current to 20*ma*, and adjust the 4-20*ma* SPAN CONTROL until the desired maximum output current is displayed on the multimeter.

**NOTE:** If the maximum current is within the 0-30*ma* range, but cannot be reached, the 4-20*ma* SPAN CONTROL is probably out of range. If this is the case, adjust the current as close as possible, and move on to the next step.

4. Repeat steps 2 and 3 until adjustment is no longer necessary.

**NOTE:** It will typically take four to six passes through steps 2 and 3 to complete adjustment. Each pass will get you closer to the final output current.

## SETPOINT Adjustments

The four setpoints are independently set using adjustment pots *(**E** on figure 1)* on the front panel of the Model 4042 Controller. Adjustment results are shown on the LCD display.

In operation, as the liquid level reaches a setpoint, the corresponding LED indicator will illuminate, and it's relay will energize. The setpoints match the display range; i.e., if the display is changed to read to two decimal places, the setpoint will also be displayed to two decimal places.

1. To adjust the first setpoint, turn the DISPLAY SELECT knob *(**F** on figure 1)* to SETPOINT 1, and adjust the pot for the desired setting, by watching the LCD display.
2. Repeat step 1 for each of the three additional setpoints.
3. Set the DISPLAY SELECT knob to either LIQUID LEVEL position. The Model 4042 Controller is now ready for operation.

## LEVEL SIMULATOR

For testing purposes, a push button *(**G** on figure 1)*, and the MIN-MAX adjustment knob *(**H** on figure 1)* are provided.

With no input signal applied, set the adjustment to MIN, then press and hold the push button. As the adjustment is turned clockwise (to MAX), the LCD display will show an increasing *(simulated)* liquid level.

As each setpoint is reached, the appropriate LED indicator *(**D** on figure 1)* will illuminate and the output should activate; i.e., pump will come on, output relay will energize, or alarm will sound. Releasing the push button returns the Model 4042 Controller to it's active mode.

**NOTE:** The LEVEL SIMULATOR adjustment has a range greater than 4-20*ma*, which can result in a negative reading at the MIN setting.

### Troubleshooting

These units are not field repairable. **Should the Model 4042 not operate properly during the adjustment or testing procedures**, insure that all electrical and air pressure connections are correct. Verify that the proper supply voltage is applied, and check all fuses. Negative display readings may indicate that the 4-20*ma* input signal is missing or is less than the 4*ma* minimum. If everything is correct, and the device still fails to operate, contact the factory at **800-862-2875** *(Mon-Fri; 8 a.m. to 5 p.m. CST)*. **Should a device fail during use**, contact the factory at **800-862-2875** *(Mon-Fri; 8 a.m. to 5 p.m. CST)*, for instructions on returning it for repair.

## TYPICAL APPLICATION

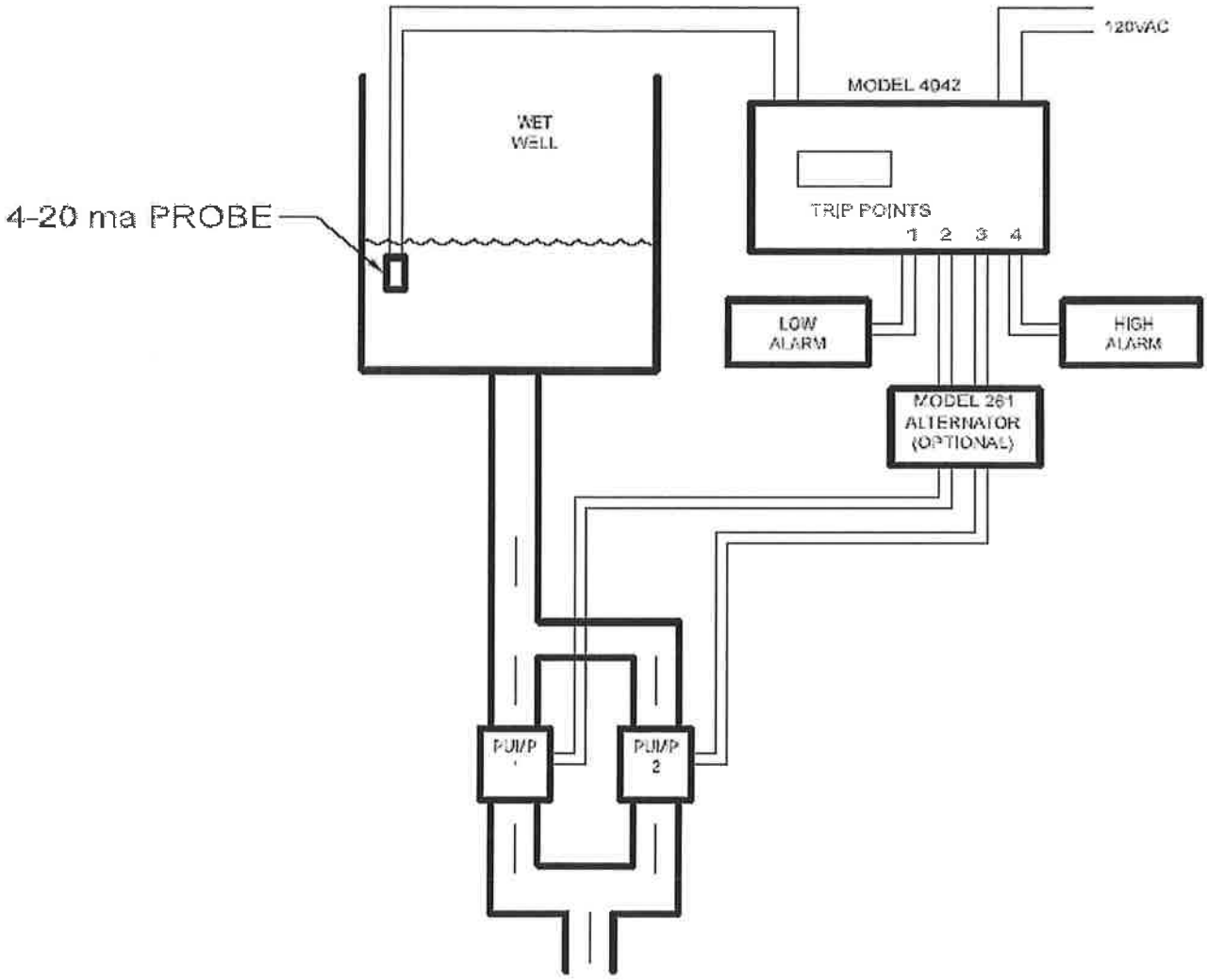


## WARRANTY

The **Model 4042 Liquid Level Controller** is warranted to be free from defects in materials and workmanship for one year. Should this device fail to operate, we will repair or replace for one year from the date of purchase. Contact the Time Mark Sales department, Monday-Friday, 8 a.m. to 5 p.m. CST, for further details.

Ground Fault Products

# 2 Pole 3 Wire Grounding

*15 and 20 Ampere, 120 Volt AC*

**Straight Blade Commercial Specification Grade and Commercial Hospital Grade GFCI Duplex Receptacles**

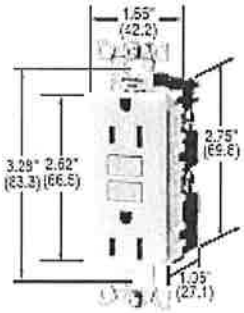


GFR5252I

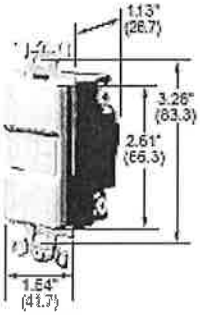


GF5350IA

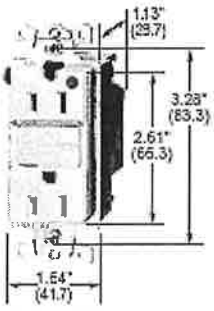


HGF8200I

## Circuit Guard®
## Commercial Specification Grade
## GFCI Duplex Receptacles

NEMA 5-15R
15A 125V
UL CSA

NEMA 5-20R
20A 125V
UL CSA

| Description | Color | Catalog Numbers | |
|---|---|---|---|
| Flush, nylon face, back & side wired, multiple drive screws. | Brown | GFR5252 | GFR5352 |
| | Ivory | GFR5252I | GFR5352I |
| | Gray | GFR5252GY | GFR5352GY |
| | White | GFR5252W | GFR5352W |
| | Black | GFR5252BK | GFR5352BK |
| | Office White | GFR5252OW | GFR5352OW |
| | Red | GFR5252R | GFR5352R |

## Circuit Guard Faceless GFCI

| Description | Color | Catalog Number | |
|---|---|---|---|
| Faceless, side wired, slotted screws. | Ivory | — | GF5350IA |

## Circuit Guard
## Commercial Hospital Grade
## GFCI Duplex Receptacles

| Description | Color | Catalog Numbers | |
|---|---|---|---|
| Flush, nylon face, side wired, slotted screws. | Brown | GF8200H | GF8300H |
| | Ivory | GF8200HI | GF8300HI |
| | Gray | GF8200HGY | GF8300HGY |
| | Red | GF8200HR | GF8300HR |
| | White | GF8200HW | GF8300HW |

*Note: GFCI type receptacles should not be used in critical care patient areas or for electrical life support equipment applications because of the possibility of power interruption.*
*All GFCI receptacles listed above include matching nylon wallplates.*

| Specifications | |
|---|---|
| Trip Level | 4 to 6 mA. |
| Trip Time | .025 sec. nominal. |
| Frequency | 60 Hz. |
| Voltage | 120V AC +10% - 15%. |
| Maximum Interrupting Capacity | 2000A. |
| Operating Temperature | -35°C to +66°C or -30°F to +150°F. |
| Maximum Humidity | 95%. |
| Listings & Standards | Meets UL 498 for receptacles, UL 943 Class A for GFCIs UL File E41978. CSA Certified. |
| Codes | Meets all 2002 NEC requirements. |

ARCADIS SUBMITTAL # CD-032-R2

abscope
environmental, inc.
P.O. Box 487
Canastota, NY 13032

315-697-8437
315-697-9391 Fax

## Submittal

| | |
|---|---|
| DATE: 8/25/11 | Abscope Job #: 11833 |
| ATTENTION: Erika Denkenberger | |
| Submittal #: 23A | |
| Stormwater Pumping Stations (Revised) | |

TO: Erika Denkenberger

Arcadis
6723 Towpath Road, P.O Box 66
Syracuse, NY
P: 315-671-9426| F: 315-445-9161

WE ARE SENDING YOU ☒ Attached ☐ Under Separate cover via _____ the following items:

☐ Shop drawings ☐ Prints ☐ Plans ☐ Samples ☒ Specifications

☐ Copy of letter ☐ Change order ☐ Other:

| COPIES | DATE | NO. | Section | DESCRIPTION |
|---|---|---|---|---|
| 1 | 8/25/11 | 23A | 33 44 18 | Pumps and Control Panel |
| | | | | |

☐ REVIEWED ☒ REVIEWED & NOTED

REVIEWED SOLELY FOR GENERAL COMPLIANCE WITH CONTRACT DOCUMENTS

ARCADIS

SIGNATURE

8/29/11
Date

Office Location

☐ RESUBMIT ☐ REJECTED

☒ Resubmit Copies for Approval

☐ Submit Copies for Distribution

☐ Return Corrected Prints

RINTS RETURNED AFTER LOAN TO US

ce

PSS Pump Service and Supply of Troy, Inc.

1 Regatta Place ■ Troy, N.Y. 12180 ■ (518) 272-0388 ■ Fax (518) 272-0389

# SUBMITTAL

**Upland Processing Facility**
**Site Improvement Pump Station**
**Lower Passaic River**
**Newark, NJ**
**August 1, 2011**

**Contractor: Abscope Environmental, Inc.**
**Engineer: Malcolm Pirnie, the Water Division of ARCADIS**

# TABLE OF CONTENTS


I. Equipment Specifications and Listing

II. Technical Specifications

III. Performance Curves

IV. Technical and Electrical Data

V. Pump Dimensions

VI. Installation, Operation and Maintenance Manual

VII. Warranty

VIII. Accessories

IX. Transducers & Float Switches

X. Pump Control Panel

# EQUIPMENT SPECIFICATIONS & LISTING

**Date: August 1, 2011**
**Job Name: Upland Processing Facility Site Improvement Pump Station**
**Contractor: Abscope Environmental, Inc.**
**Engineer: Malcolm Pirnie, the Water Division of ARCADIS**

## Mechanical Data

**Pump Manufacturer: HOMA Pump Technology, Inc.**
**Model: AK636-320/21.5PU FM**
**Qty: 3**
**Impeller: 300mm Trim**
**Solid Size Diameter (inches) 3"**
**Pump Weight: 650lbs.**
**Discharge Size Diameter (inches): 6"**
**Power Cable: 1 Qty 30' Feet Length**
**Sensor Cable: 1 Qty 30' Feet Length**

## Motor Data

**BHP: 18.4**
**RPM: 1160**
**Voltage: 460**
**Phase: 3**
**Hz: 60**
**Insulation Class: F**
**Service Factor: 1.25**
**Motor Filling Medium: Air**
**Thermal Overload: yes**
**Moisture Probe: yes**
Motor Cooling Jacket: Yes

## Hydraulic Data

**Actual Flow: Determined System Head**
**Design Flow: 1,700GPM@25'TDH**
**Shut Off Head: 65 Feet**
**Test Requirements: Manuf. Standard Performance Test**

# Technical Specifications

## A Series Non-Clog Submersible Pump
## Installation: Wetwell with AutoCoupling

- SCOPE

  These specifications cover the description, performance, and installation of the electric submersible pump(s) to be procured for customer's project. The pump(s) described here are intended for use in a "wet well only" pumping station and will include a self-engaging Autocoupling Assembly. The pump assembly including Impeller, Volute, Motor and Autocoupling, shall be in full compliance with these specifications.

- GENERAL CONDITIONS 21.5 PUFM TRIM

  Furnish and install 3 Homa Model AK636 320 Electric Submersible Wastewater Pump(s), each consisting of a single stage, non-clog centrifugal pump, close-coupled to a squirrel cage induction type electric motor assembled in a single-body, watertight aggregate, capable of maintaining its watertight integrity submerged under 80 feet of water, complete with Autocoupling Base and Adapter Flange, for automatic operation in a Wet Well. The Autocoupling discharge flange shall be ANSI Class l25 size ___ inch Cast Iron.

- PERFORMANCE GUARANTEE

  The pump shall be designed to handle raw, unscreened sewage, storm water, sludge or similar contaminated liquid at a operating point of 1700 GPM at 75 FT TDH with a Hydraulic Efficiency of at least 67 %. Shut-off head shall be 84 FT minimum. As this pump will be utilized for solids handling, it must be capable of repeatably passing spherical solids up to 3 inch in diameter.

- MATERIALS OF CONSTRUCTION

  Major castings: ASTM A48 Class 40B Cast Iron. - Wear Ring: ASTM Bl44 Bronze. - Shaft: AISI 430F Stainless Steel. - Fasteners: AISI 304 Stainless Steel. - O-Rings: Nitrile Rubber. - Shaft Seals: Silicon Carbide/Silicon Carbide (impeller and motor side). Cable Jacket: Neoprene. - Cable Entry: elastomer grommet, stainless steel washers.- Protective Coating: High Solids Epoxy

- IMPELLER

  Impeller will be cast as one piece and shall be one of the following designs:
  ( ) single-vane closed (double-shrouded), radial non- clog ("AM" & "AMX" Models)
  (✓) two-vane closed (double-shrouded), radial non-clog ("AK" Models)
  ( ) multi-vane open (single-shrouded), torque-flow (vortex, 4" and 6" "AV" models)
  statically and dynamically balanced, to assure that vibration amplitudes, measured at the level of the upper bearing while operating in a vertical position, remain within the limits specified by the Hydraulic Institute Standards.

- VOLUTE

  Volute will be cast in one piece, with smooth internal contours and surfaces, providing obstruction-free passageways with low friction losses. A stationary Wear Ring, made of bronze, shall maintain close tolerances between the rotating Impeller and the stationary Volute.

- SHAFT

  Pump shaft must have generous shoulder fillet radii to minimize stress concentration and fatigue. Deflection at the Shaft Seal within the operating range shall not be more than 0.002 inch.

- BEARINGS

  Pump shaft shall be supported by anti-friction bearings, designed for minimum 50,000 hours B-l0 Life at the pumps Best Efficiency Point ,and shall be factory pre-lubricated. The lower impeller-side bearing will be a double-row, deep groove ball bearing, axially retained, to sustain both axial and radial loads. The upper motor-end bearing is a single-row, deep groove ball bearing axially floating, to sustain radial loads only.

# Technical Specifications

- ## WATERTIGHT INTEGRITY

The watertight integrity of the single-body pump-motor assembly shall be assured.

Each Cable Entry Assembly shall contain an elastomer grommet, flanked by two washers, closely fitted to the cable O.D. A watertight seal shall be maintained by screwing a threaded cable entry gland into a cable inlet flange which bolts into the motor cap. The cable entry gland threads down to a positive stop, thereby tightly compressing the grommet around the cable. The gland will provide a strain-relieving , anti-kink feature, functioning independently from the separate sealing action. The cable inlet flange shall contain an oring groove on the bottom side of the flange to allow for watertight integrity of the bolt-on cable entry assembly when bolted into the entry holes in the motor cap. For pumps above 10 horsepower an isolated Junction Box containing the Terminal Board, and sealed from the Motor Compartment by a watertight isolation plate, will provide a secondary barrier against water or moisture penetration. Each pump shall be supplied with 30 feet of SO Type power cable.

- ## SEALS

Motor Compartment shall be isolated from the Liquid End by Single Mechanical Shaft Seals in tandem arrangement (dual-independent, both oriented to resist pressure from the impeller). The upper motor side seal shall run in an Oil Chamber, which separates the Motor Compartment from the Liquid End and provides permanent lubrication and cooling. The lower impeller side seal will also get lubrication from the Oil Chamber. Each seal will have a stationary portion and a positively driven rotary portion. Springs must be protected from the pumped liquid; and under no circumstances can solid particles accumulate on the external spring and hamper its effectiveness. Seals must not require repeated checking or re-adjustment, except periodic inspection of the oil chamber. At the interfaces of major castings, sealing shall by accomplished by resilient Buna-N O-Rings, confined within closely fitted, high surface quality rabbet joints, compressed only to the prescribed dimension by metal-to-metal contact, allowing radial movement and preventing permanent set. Flat gaskets and seal rings, which may be squeezed unevenly or beyond the permanent deformation limit, are not allowed.

- ## SEAL PROBE

A conductive seal probe shall be provided with pump. Probe shall be mounted into mechanical seal chamber and when interlocked with control panel, probe shall indicate the presence of contaminants within mechanical seal chamber. Option for external seal probe devices shall be readily available and field retrofittable for all pumps.

- ## ELECTRIC MOTOR

Each pump shall be driven by a Submersible Squirrel Cage Induction Motor in accordance with NEMA MG I Section IV Part 30, rated at 18.4 HP 1160 RPM 460 Volts 3 Phase. Motor shall be NEMA Design B for continuous duty, capable of sustaining 15 starts per hour. The pump and motor shall be produced by one manufacturer and shall be of the air-filled, watertight design.

All stator windings and leads shall be insulated with moisture-resistant Class F Insulation, capable of withstanding 155°C Max. temperature, dipped and baked three times. Upon assembly the stator shall be heat-shrink-fitted into the stator housing; the use of bolts, pins or other fastening devices, which would require penetration of the stator housing, shall not be acceptable.

In each phase winding there shall be embedded a bi-metallic temperature sensor, wired in series and interlocked with the motor overload protection in the Control Panel. Any of these thermal sensors shall cut out electric power if the temperature in its winding exceeds 140°C, but shall automatically reset when the winding temperature returns to normal. The motor shall be non-overloading through the selected performance curve and have a Service Factor of 1.15.

When the application requires, motor shall be approved for use in Hazardous (Classified) areas. Pumps shall be suitable for operation in Class 1, Division 1, Groups C & D Areas and shall be approved by Factory Mutual (FM) for use in the area classification indicated.

- ## INSTALLATION MODE

An Autocoupling assembly shall be employed to eliminate the need for entering the wet well to service pumps. The system shall allow the lowering of the pump unit(s) into the well along rigid guide pipes, resulting in a self-engaging, firm, leak proof coupling of the volute outlet to a receiving Base anchored to the floor which forms the discharge pipe connection. To assure a leak proof junction between movable and stationary components, a resilient seal ring shall be employed which is easily replaceable as part of the pump assembly, is axially and evenly compressed upon contact. Metal-to-metal contact faces shall not be allowed. Once seated, the pump shall be entirely supported by the Autocoupling Base, without any reliance on additional supports.

# Technical Information

AK636-320/20PUFM

Impeller Trim to 295mm

**Operating data**

| | |
|---|---|
| Flow | 1700 US g.p.m. |
| Head | 25 ft |
| Pump efficiency | 59 % |
| Required power | 18.4 hp |
| NPSH | |
| Fluid | Water, clean |
| Temperature | 68 °F |
| Pumpe type | Single pump |
| No. of pumps | 1 |

**Pump data**

| | |
|---|---|
| Type | AK636-320/20 PUFM |
| Manufacturer | HOMA |
| Series | AK |
| Impeller | Multi channel impeller |
| Impeller size | 11.6 " |
| Solid size | 3 inch |
| Discharge port | 6" ANSI |

**Motor data**

| | |
|---|---|
| Rated voltage | 230 / 460 V |
| Frequency | 60 Hz |
| Power output (P2) | 20.0 |
| Rated speed | 1160 rpm |
| Number of poles | 6 |
| Efficiency | 86 % |
| Rated current | 60 / 30 A |
| Degree of protection | IP 68 |

**Materials**

| | |
|---|---|
| Motor housing | Cast Iron ASTM A48;Cl.40B |
| Impeller | Cast Iron ASTM A48;Cl.40B |
| Pump housing | Cast Iron ASTM A48;Cl.40B |
| Wear ring | Bronze ASTM B144 |
| Motor shaft | AISI 430 F Stainless Steel |
| Bolts | AISI 304 Stainless Steel |
| Motor jacket | Stainless steel |
| Elastomeres | Nitrile Rubber |

| | |
|---|---|
| Mechanical seal on motor side | SiC / SiC |
| Mechanical seal on medium side | SiC / SiC |
| Lower Bearing | Two angular ball bearings |
| Upper Bearing | Deep Groove Ball Bearing |

Testnorm
**ISO 9906**

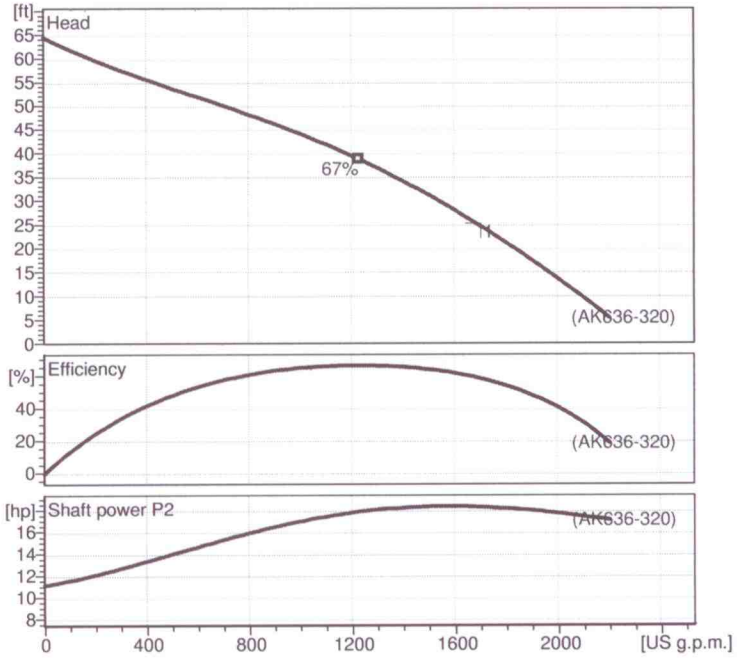


Wet well installation with auto coupling kit (PU-motor, 320, FM, 6")
Dimensions in inch, letters see table

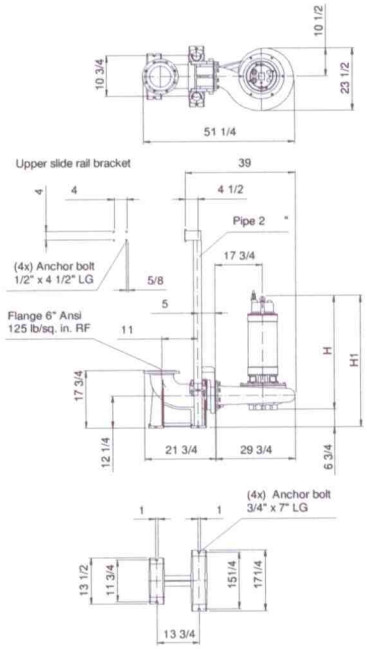


**Table Dimensions**

( inch)

| | |
|---|---|
| H | 42 3/4 |
| H1 | 48 1/4 |

2.0 - 11.01.2008 (Build 137) Homa Pump Technology Inc. (internal)

| Project | Project no.: | Created by: | Page: | Date: |
|---|---|---|---|---|
| Pump Service Troy | Arcadis- Newark, NJ rev3 | R Sura | 1 | 2011-08-23 |

HOMA PUMPEN MIT SYSTEM

# Performance Curve

AK636-320/20PUFM

Impeller Trim to 295mm

## Impeller

| Impeller type: | Solid size Ø: | Max. Ø: | Min. Ø: | Sel. Ø: |
|---|---|---|---|---|
| **Multi channel impeller** | **3 inch** | **14¼"** | | **11.6 "** |

## Operating data

| Speed: | Frequency: | Duty point: | Suction port: | Discharge port: |
|---|---|---|---|---|
| **1160** | **60 Hz** | Q = **1700 US g.p.m.** H = **25 ft** | | **6" ANSI** |

| Power data referred to: | Water [100%] ; 68°F; 62.322lb/ft³; 1.0818E-5ft²/s | Testnorm: | **ISO 9906** |
|---|---|---|---|

Curve number:

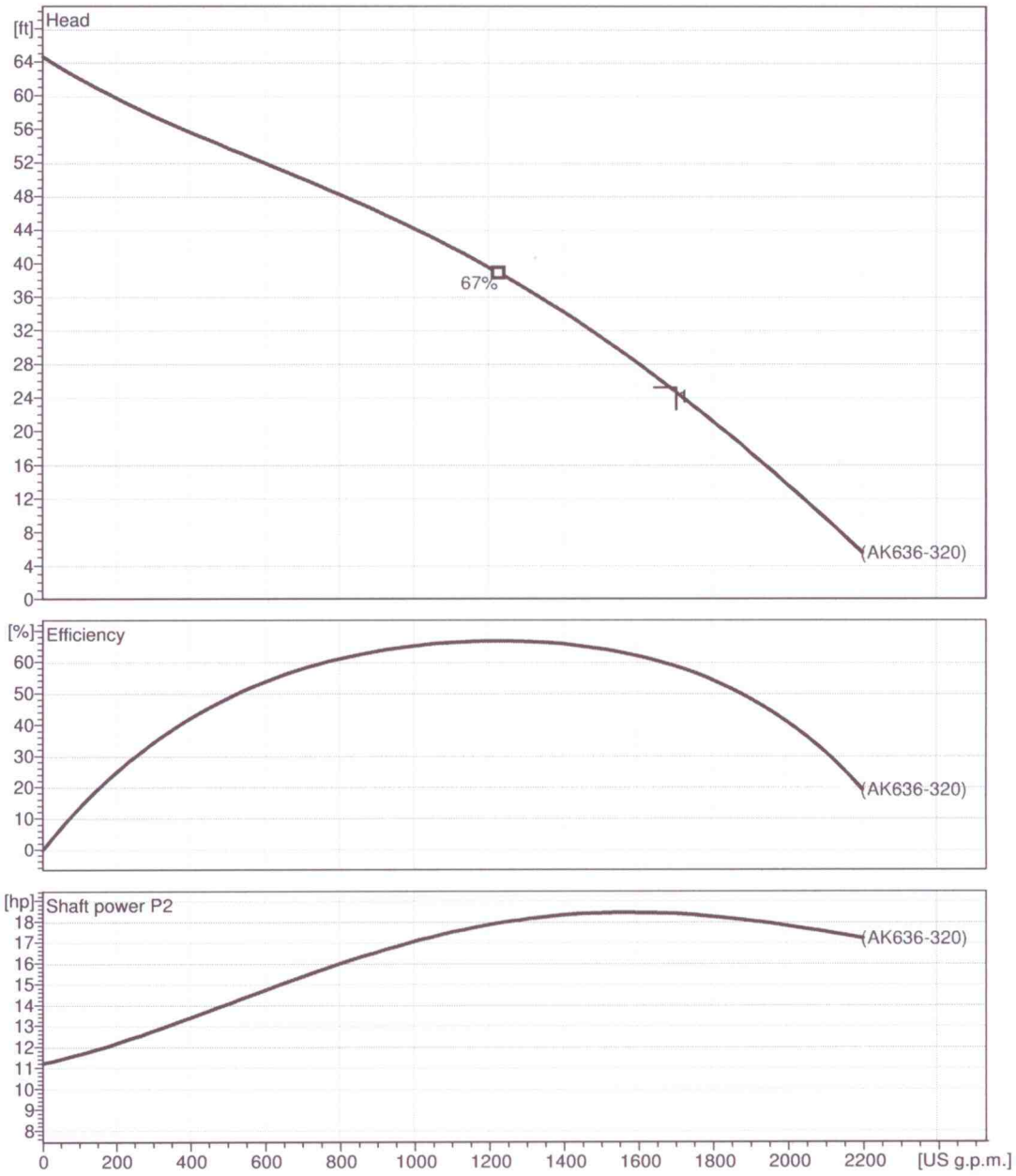


2.0 - 11.01.2008 (Build 137) Homa Pump Technology Inc. (Internat)

| Project | Project no.: | Created by: | Page: | Date: |
|---|---|---|---|---|
| **Pump Service Troy** | **Arcadis- Newark, NJ rev3** | **R Sura** | **2** | **2011-08-23** |

HOMA
PUMPEN MIT SYSTEM

# Technical Data

AK636-320/20 P/C FM
AK636-320/20 P/C
AK636-320/20 PU

AK636-320/20 PUFM
Impeller Trim to 295mm

## Operating data

| | | | | | | |
|---|---|---|---|---|---|---|
| Fluid | Water, clean | | Flow | | 1700 | US g.p.m. |
| Temperature | 68 | °F | Static head | H geo | 0 | ft |
| Density | 62.32 | lb/ft³ | Manometric head | H man | 25 | ft |
| Kin. viscosity | 1.082E-5 | ft²/s | Pump efficiency | | 59.0 | % |

## Pump

| | | | | | | |
|---|---|---|---|---|---|---|
| Pump Code | AK636-320/20 PUFM | | Speed | | 1160 | rpm |
| Suction port | | | Head | Max. | 64.7 | ft |
| Discharge port | 6" ANSI | | | Min. | 5.6 | ft |
| Impeller type | Multi channel impeller | | Flow | Max. | 2203.3 | US g.p.m. |
| Solid size | 3 | inch | Pump efficiency max. | | 67 | % |
| Impeller Ø | 11.6 | inch | Required rated power max. | | 18.5 | hp |

## Motor

| | | | | | | |
|---|---|---|---|---|---|---|
| Motor design | Submersible motor | | Insulation class | | F | |
| Motor name | AM204.25P/6/3 | | Degree of protection | | IP 68 | |
| Frequency | 60 | Hz | Temperature class | | T3C | |
| Power input (P1) | 24.9 | hp | Ex | | D | |
| Power output (P2) | 20.0 | hp | Explosion protection | | | |
| Rated speed | 1160 | rpm | Efficiency at % rated power | 100% | 86 | % |
| Rated voltage | 230 / 460 V | 3~ | | 75% | 87 | % |
| Rated current | 60.0 / 30 | A | | 50% | 86 | % |
| Starting current, direct starting | 222.0 / 111 | A | cos phi at % rated power | 100% | 0.78 | |
| Starting current, star-delta | 74.0 | A | | 75% | 0,73 | |
| Service factor | 1.15 | | | 50% | 0,62 | |

| | | |
|---|---|---|
| Shaft seal | Mechanical seal on motor side | SiC / SiC |
| | Mechanical seal on medium side | SiC / SiC |
| Bearing | Lower Bearing | Two angular ball bearings |
| | Upper Bearing | Deep Groove Ball Bearing |
| Remarks | | |

## Cable data — Starting mode: direct — /Weight

| | | | | | | | |
|---|---|---|---|---|---|---|---|
| Motorversion | | P 20 /C FM | P 20 /C | PU 20 | PU 20 FM | | |
| Power cable | | 4X10 | 4G10 | 4G10 | 4X10 | | |
| Type of power cable | | NSSHÖU-J | H07RN-F PLUS | H07RN-F PLUS | NSSHÖU-J | | |
| Control cable | | 4+4X1,5 | 5G1,5 | 5G1,5 | 2x4X1,5 | | |
| Type of control cable | | NSSHÖU-J | H07RN-F | H07RN-F | NSSHÖU-J | | |
| Cable length | ft | 32.8 | | | | | |
| Weight aggregat | lb | On demand | On demand | On demand | On demand | | |

## Materials

| | | | |
|---|---|---|---|
| Motor housing | Cast Iron ASTM A48;Cl.40B | Bolts | AISI 304 Stainless Steel |
| Pump housing | Cast Iron ASTM A48;Cl.40B | Elastomeres | Nitrile Rubber |
| Impeller | Cast Iron ASTM A48;Cl.40B | Motor jacket | Stainless steel |
| Wear ring | Bronze ASTM B144 | | |
| Motor shaft | AISI 430 F Stainless Steel | | |

Homa Pump Technology Inc. (internal)
2.0 - 11.01.2008 (Build 137)

# Accessory Data

## Seal Probe

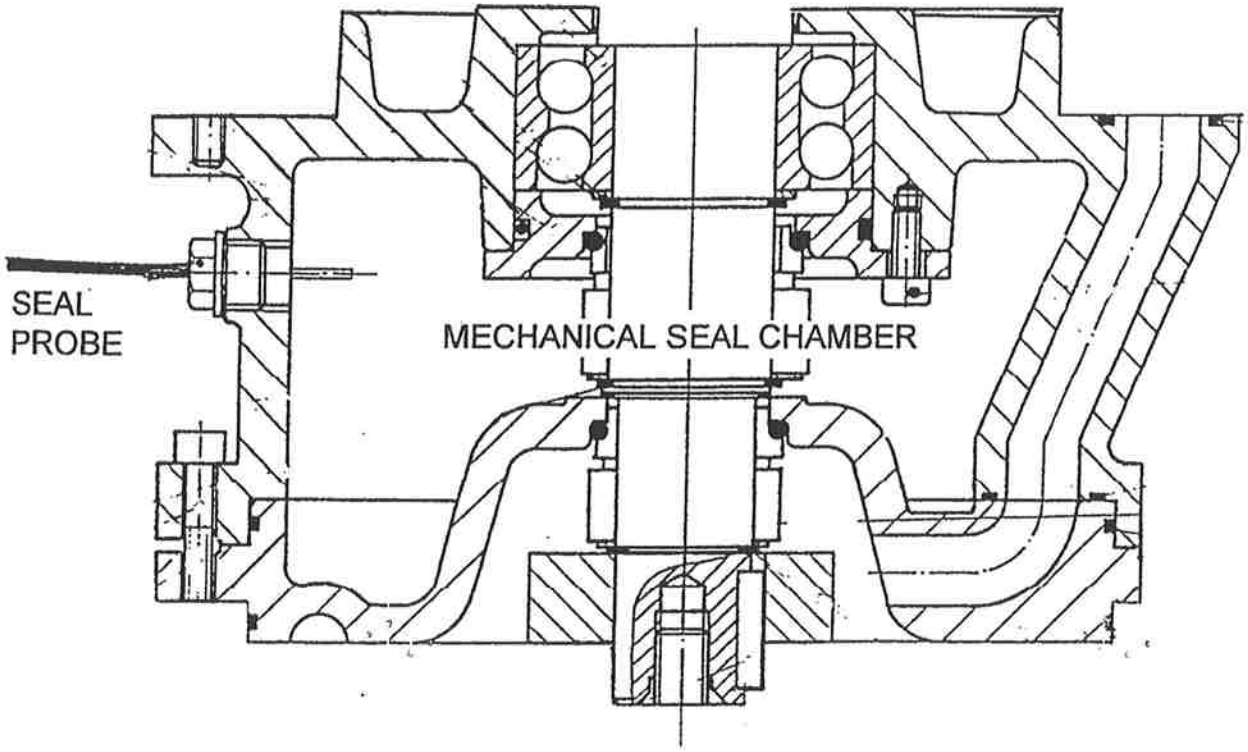


Principle of Operation

Sensor is installed in the mechanical seal chamber which contains an electrically non-conductive oil. The presence of water changes the chamber fluid mixture to a conductive condition and therefore completes the circuit which will result in a leakage indication on the customer supplied control panel.

Electrical Specifications
Sensor Type : Conductive
Suggested Seal Fail Relay Voltage : 24 VAC
Required Wiring : Single wire in separate sensor cable to be connected to seal leak relay in control panel by customer. Two wire probe is available. Please consult factory.

Cable Length : 30 feet is standard. Longer lengths are available. Please consult factory

# Accessory Data

## Media Cooled, Jacketed Pump Construction

The stator is cooled by the circulation of a portion of the pumped liquid in the space between the stator casing and the cooling jacket.

In the standard media cooled design, ambient temperature pumpage is taken from behind the impeller and is ported into the cooling jacket chamber. The cool liquid entering the bottom of the chamber, forces the warm liquid into the extended return port at the top of the jacket. The warm liquid is then returned to the volute chamber. Because of the close running tolerances between the impeller back vanes and the rear cover, large solids are prevented from entering the cooling chamber.

For severe solids loading or for high temperatures pumpage, our pump construction also permits the use of external cooling liquid. Inlet and Outlet cooling ports are added to the SS jacket to permit external flush water to be used, and the bypass ports are closed off during pump assembly.

An alternate configuration is also offered which utilizes an external inlet coolant port, with the internal outlet port returning the liquid to the pump chamber. This permits an external flush to augment the media cooling and can serve as a continuous flush in heavy solids applications.

**See Tech Page for Closed Loop Cooling System Option.**

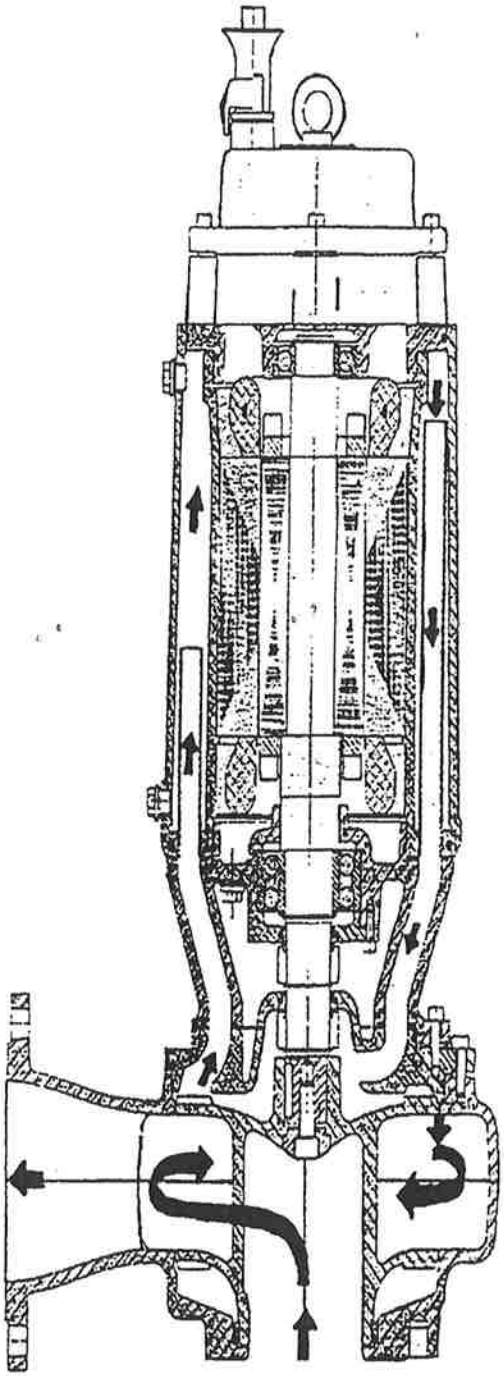

PTI reserves the Right to change Product, Material or Design Data as required without Notification.

HOMA
PUMPEN MIT SYSTEM

# Dimensions

AK636-320/20PUFM

Impeller Trim to 295mm

Wet well installation with auto coupling kit (PU-motor, 320, FM, 6")
Dimensions in inch, letters see table

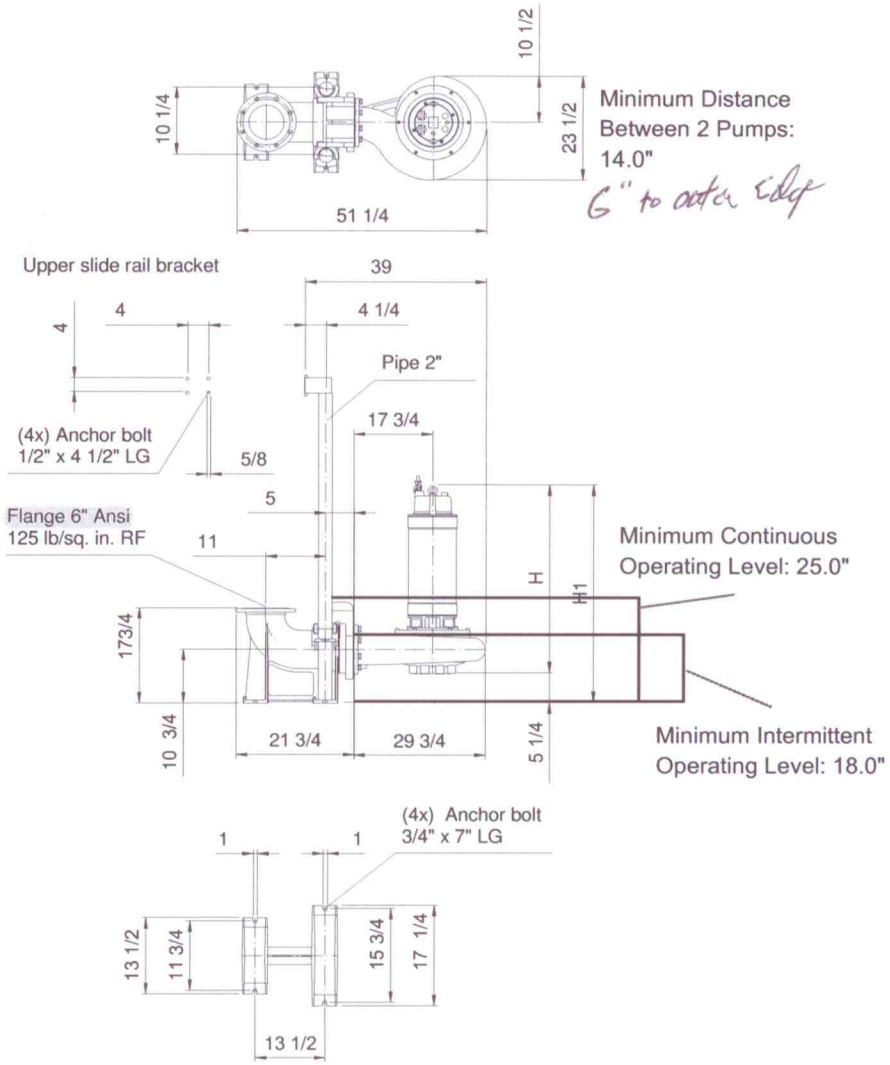


## Table Dimensions ( inch)

| | |
|---|---|
| H | 42 3/4 |
| H1 | 48 1/4 |

2.0 - 11.01.2008 (Build 137) Homa Pump Technology Inc. (internal)

| Project | Project no.: | Created by: | Page: | Date: |
|---|---|---|---|---|
| Pump Service Troy | Arcadis- Newark, NJ rev3 | R Sura | 3 | 2011-08-23 |

HOMA

PUMP TECHNOLOGY

# A Series

## Installation, Operation & Maintenance Manual

**Project:** _____

**Installation:** _____

**Pump Model:** _____ **Serial Number:** _____

*AIOM REV. 4/09*

**HOMA Pump Technology, Inc.**
390 Birmingham Boulevard • Ansonia, CT 06401

## ELECTRICAL INSTALLATION:

### GENERAL GUIDELINES

All electrical work shall be carried out under the supervision of an authorized, licensed electrician. **The present state adopted edition of the National Electrical Code as well as all local codes and regulations shall be complied with.**

### VERIFICATION OF POWER SUPPLY

Prior to making any electrical connections or applying power to the pump, compare the power supply available at the pump station to the data on the unit's nameplate. *Confirm that both voltage and phase match between pump and control panel.* The voltage supplied at the pump shall be +5 / -10% of the nameplate value, frequency shall be + / - 1% of the nameplate value, the voltage phase balance shall be within 1% and the maximum corrected power factor shall be 1.0.

### POWER LEAD WIRING

HOMA A Series pumps may be provided with 1 or more cables, depending on motor horsepower and operating voltage. Power leads L1, L2, & L3 may be provided as single conductor, or as multiple conductors. Multiple conductor configurations may use leads from separate cables, or may use two conductors within one cable. Please refer to wiring diagram in the appendix for specific connection details. *The pump must be connected electrically through a motor starter with proper circuit breaker protection in order to validate warranty. Do not splice cables.*

### THERMAL SWITCH WIRING :

Pumps are equipped with thermal switches embedded in the stator windings which are normally closed, automatically resetting switches. Switches will open when the internal temperature rises above the design temperature, and will close when the temperature returns to normal. Thermal switches must be wired to a current regulated control circuit in accordance with the NEC.

Identify thermal switch leads marked T1 and T3 in the power or control cable.

The resistance across the leads will be .5 Ohms. Thermal leads must be connected to the thermal overload relay located in the control panel. *Thermal switch leads must be connected to validate warranty.*

**Note: All sizes of Class 1, Div. 1 pumps for hazardous service must have thermal switch leads connected to a current regulated control circuit in accordance with NEC.**

### SEAL PROBE WIRING

The mechanical seal leak detector probe utilized in the pump is a conductive probe which is normally open. The intrusion of water into the seal chamber completes the electrical circuit. Control panel provisions will sense this circuit closure, and will provide indication or alarm functions depending on the panel design.

Either single or dual wire systems may be provided. Single wire systems utilize one energizing conductor, and the pump casing and neutral lead as the ground or return portion of the circuit. The dual wire systems utilize two separate conductors for each leg of the circuit. With either system, the seal probe leads must be wired into a control circuit provided in the control panel. This control circuit must energize the probe with a regulated power source, and sense the closed circuit in event of water intrusion. Indication and alarm functions must also be provided in the control circuit. Please see control panel wiring diagram for seal probe connection points. *IMPORTANT: For Hazardous Area Classification Pumps, leak detector circuit must be in conformance with applicable NEC codes and regulations.*

### START / RUN CAPACITORS AND RELAYS:

All single phase motors require start and run capacitors along with a start relay to operate. Refer to the wiring diagram in the appendix. Capacitors and relays must be sized for the specific motor.

Capacitors are sized based on ideal conditions. The run capacitor may need to be resized to match the available field voltage. Each cap kit shipped is supplied with a wiring diagram and start up procedure.

*If the base is not level, proper sealing of the pump to base may not occur!*

Place the guide rails (supplied by others), cut to length in to the rings of the base. The rails will be secured at the top of the pump station with the upper guide bar bracket and to extend down to the sump floor.
Install the upper guide bar bracket as shown in the appendix.

*For stations exceeding 10 feet in depth intermediate guide bar brackets are recommended. One bracket is recommended for each additional 10 feet of station depth.*

Check that the guide system is properly installed in the vertical orientation by using levels and a plumb line. Fully tighten all anchors and mounting bolts.
Connect the station riser piping to the outlet flange of the base.

Before lowering the pump, verify the direction of impeller rotation (refer to start-up section for procedure).

**Make sure to use lifting equipment that has adequate capacity for the pump that will be handled.** Before installing pump, check to be certain the profile seal (rubber ring) is properly positioned in the guide claw flange. Then position pump so the guides on the discharge flange engage the rails. Slowly lower the pump along the guide rail. Once the pump reaches its bottom location it will automatically connect to the base.

*It is recommended that the stationary base elbow be visible before lowering the unit. If this is not possible, ensure all debris is removed from wet well.*

Important: Do not install more than one (1) check valve into any piping system or problems will occur.

## INSTALLATION OF PUMPS WITH RING STANDS:

The ring stand design allows for a free standing, simple economical installation or to be transportable from one installation to another.
It is intended to operate completely or partially submerged in the pumping liquid.
Install the ring stand to the underside of the volute with the supplied fasteners provided.
Apply thread locking compound such as blue #242 and tighten the bolts using the torque table indicated in the table. Do not over tighten!
Install suitable lifting devise of an adequate length to ensure proper lowering and raising capabilities. Lower the pump into the area where it is required. Properly position power cable and chain so they stay above pump and cannot enter the pump suction.

## INSTALLATION OF PUMPS FOR DRY PIT APPLICATIONS:

**Foundation and Piping Requirements:**

General

The following recommendations are basic guidelines which are intended to outline basic requirements in the design of the dry pit station. It is essential that a licensed professional engineer be retained by the owner to design the station and all support structures.

Foundations

Foundations may consist of any structure heavy enough to provide permanent rigid support for the pump and inlet elbow stand. Concrete foundations built up from the solid ground are the most commonly used. The concrete floor shall be level. The space required by the inlet stand and the location of the foundation anchor bolts are shown on the outline dimension drawing. Foundation bolts are to be embedded in the concrete.

## Jacketed Pump Option

The cooling jacket has been supplied based upon the specified operating conditions of this application. It is important this jacket is function properly, or the internal motor components could become damaged.

Several cooling configurations are available depending upon customer preference and system requirements. You must know what configuration of cooling system is to be used with the pump prior to installation. In some cases, field test results may indicate a change of cooling method is required. Consult factory for necessary changes to the pump.

**Cooling Requirements**

**1 - Standard Media Cooled** – This construction does not require any external piping and it is completely self-contained. This design is suitable for the routine collection system application. No pump modifications are required.

Required Hardware – Automatic air bleed valve mounted in upper vent port or a ¼" or 3/8" elbow and small block valve for venting. A length of hose routed to the sump should be attached to either air bleed or the block valve outlet.
Start Up Requirements – This jacket must be vented at start up. Additional venting may be required after situations where the suction or discharge piping has been removed for maintenance and reinstalled. Some adverse operating conditions can allow air to become trapped in this jacket. This must be periodically vented off. If this occurs, it is recommended the small air bleed valve is utilized.

**2 - Media Cooled with External Flush** - This construction requires an external flow of water, typically re-use water. Applications which require this option are typically heavy slurry or sludge service often found in the treatment plant. This option routes the externally supplied water into the pumped media. No pump modifications are required.

Required Hardware – Mounting a regulating valve, pressure gauge and automated block valve between the water supply and the upper jacket port is required. The supply valve should be adjusted to allow the supply of water to exceed pump discharge pressure. This assures a positive flow of water into the pump chamber. The block valve should be automated to open whenever the pump is operated.

Start Up Requirements – This jacket must be vented at start up Additional venting may be required if cooling water supply is interrupted.

**3 - External Fluid Cooled** - This option requires an external flow of water like in option 2 above, but is used where dilution of the pumped product is not desirable. The supply of water is internally isolated from the pumped media. The water inlet is routed into the jacket's lowest port and returned out of the highest port. This option does NOT allow water to enter the pumped media and pump must be ordered from factory this way.

Required Hardware – Mounting a regulating valve, pressure gauge and automated block valve between the water supply and the upper jacket port is required. The supply valve should be adjusted to allow for a good supply of water to flow through the jacket. The block valve should be automated to open whenever the pump is operated.
Start Up Requirements – This jacket must be vented at start up. Additional venting should not be required.

**Vent Valve Installation**

HOMA dry pit pumps are supplied with a valve and fitting that must be installed and maintained to ensure the proper performance of these pumps.
The opening for this valve is located on the base of the motor cap near the mounting screws. The pump is shipped with a plug installed which must be removed prior to start up.
This opening is a metric straight thread and requires an adapter included with the valve and fitting hardware. It is also recommended that a length of hose be attached to the valve and routed back to the sump.

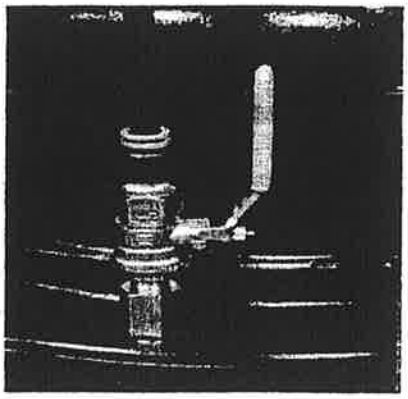

**Note: Leave vent valve open in wet pit pump application to prevent air entrapment in jacket.**

## MAINTENANCE

Regular maintenance will help ensure longer pump life and more reliable operation. It is recommended that pumps in intermittent operation be inspected twice a year and pumps in continuous operation be inspected every 1,000 hours. The following is a listing of required inspection and maintenance items.

**If any of the problems described in the following list exists stop operating the pump to avoid damage or personal injury.**

### 1. CABLE ENTRY

Make sure that the cable entry flange and strain relief clamp are tight. If the cable entry is showing signs of leakage remove cable from entry, remove grommet, cut a piece of cable off so that the grommet seats on a new portion of the cable, replace grommet, and reinstall cable assembly, into the top of the motor.
*Note: Explosion Proof cables are sealed with a Factory Mutual Approved potting compound. Please consult factory for instruction.*

### 2. CABLES

Inspect the cable for cuts, scrapes or sharp bends. If the outer jacket is damaged, replace the cable. Splices of the power or control cable within the wet well area are not acceptable.

### 3. MOTOR INSULATION RESISTANCE

Megger the insulation between the phases; and between any phase and ground. Resistance values should be greater than 1 M ohm. If abnormal readings are obtained, contact authorized service center immediately.

### 4. EXTERNAL PARTS ON PUMP

Make sure that all screws, bolts and nuts are tight. Check the condition of pump lifting eyes and replace if damaged or worn, Replace any external part that appears worn or damaged.

### 5. SEAL CHAMBER OIL

*Note: Use extreme care when removing the seal chamber plug, as the chamber may become pressurized if seal failure has occurred.* Seal chamber oil should be checked for signs of water intrusion, or other impurities any time the pump is removed from wet well. To check the condition of the oil, remove the oil fill plug. Drain the chamber volume into a transparent container. Visually check sample for impurities or emulsification (oil may appear cream-like if a small amount of water is present). If significant water intrusion has occurred, remove and replace lower mechanical seal. Unless obvious mechanical damage has occurred to the lower seal, it is good practice to replace the upper and lower mechanical seals as a set. Refill seal chamber with fresh oil to the bottom of fill plug port (when pump is in vertical position) and replace oil fill plug.

### 6. IMPELLER

Periodically inspect impeller by turning pump on its side, remove suction strainer nuts and strainer to expose impeller and relocate position of adjusting plate (suction cover) as needed. Replace the impeller if it is damaged or worn.

## SPARE PARTS

In order to obtain spare parts identify the required parts by looking at the enclosed cross sectional drawing and listing, and contact authorized HOMA PUMP TECHNOLOGY representative with your order. Authentic Homa Pump Technology parts shall be used to maintain warranty.
*Note: Explosion Proof pumps must be identified as such, and the pump serial number must be referenced for proper parts identification.*

## RECOMMENDED TOOLS AND SUPPLIES

In addition to ordinary maintenance and lifting devices, ensure that complete set of metric Allen wrenches, impeller puller, Loctite 242 (Blue), and Anti-seize compound are on hand.

## *PROFILE SEAL INSTALLATION*

### IMPORTANT

Black Rubber Sealing Ring (Profile Seal) must be installed in the Guide Claw before pump is installed. Ring must be installed with the large diameter lip inside the groove of the Guide Claw Flange.

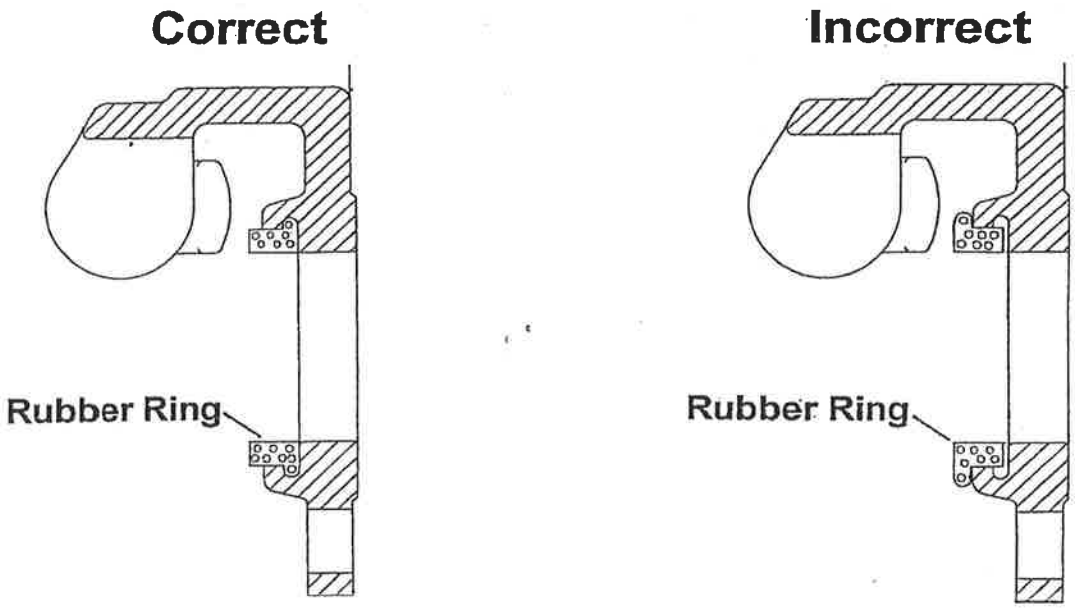


**CALL OUR TECHNICAL SUPPORT GROUP WITH ANY QUESTIONS REGARDING THE INSTALLATION OF THIS EQUIPMENT.**

# 3 Phase Cable Connection Diagram

Note: If wire numbers or markers are different than shown, consult factory!

## 7 Conductor

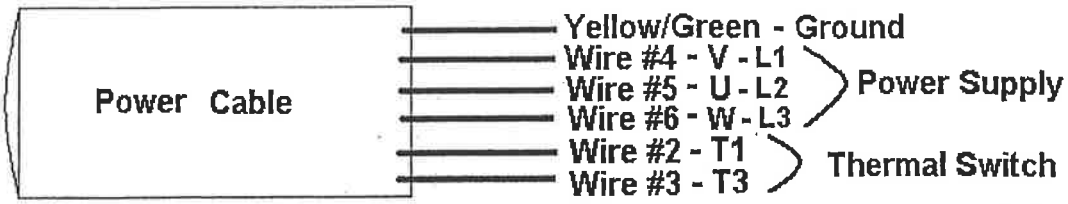


## 10 Conductor

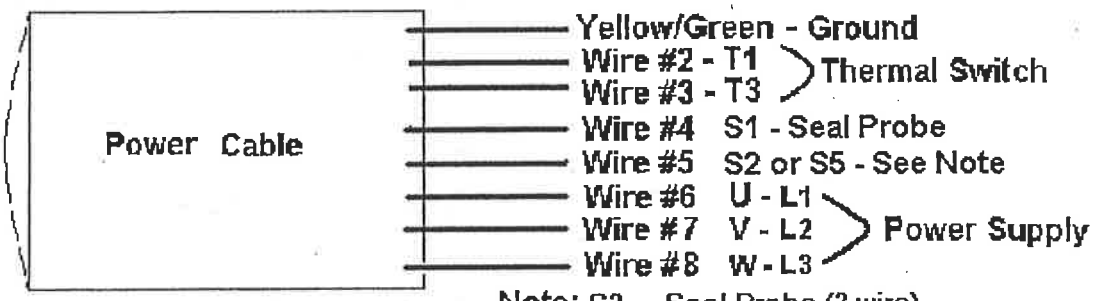


Note: S2 - Seal Probe (2 wire)
S5 - Stator Leakage Probe

## Dual Power Cable

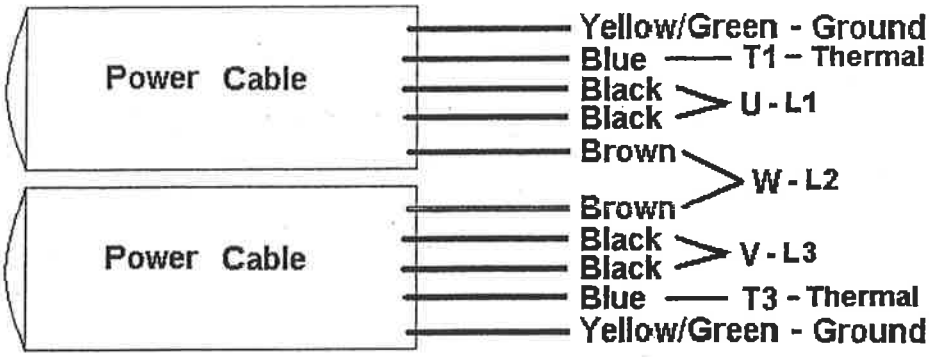


## Power and Control Cable

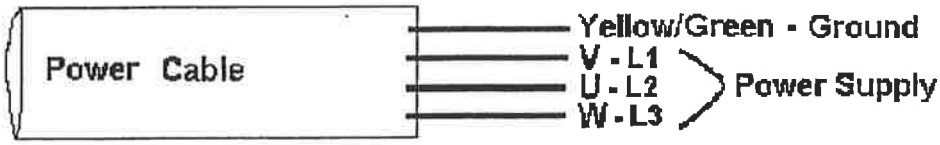


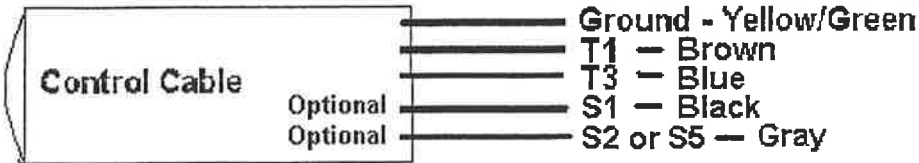


Note: S2 - Seal Probe (2 wire)
S5 - Stator Leakage Probe

# 3 Phase Cable Connection Diagram
## T Motor

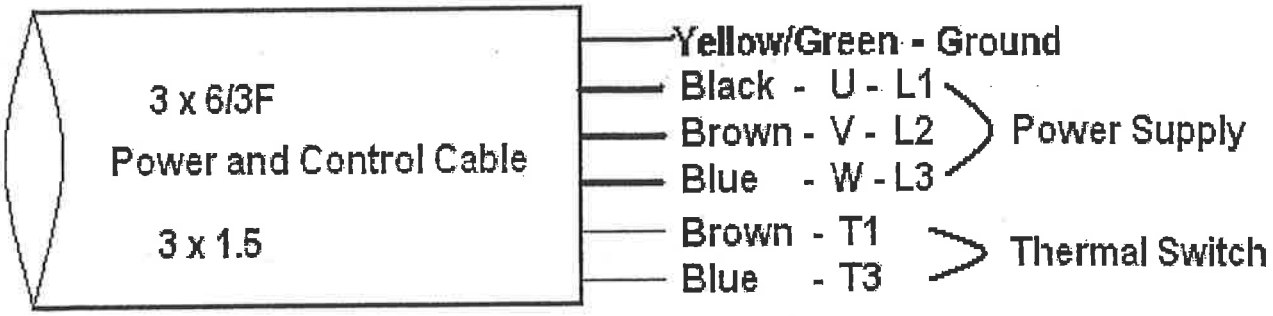


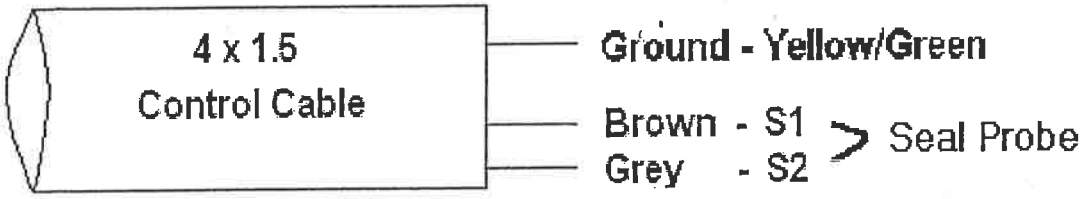

# 1 Phase Cable Connection Diagram
# C, D, N & T Frame Motors *

Note: If wire numbers or markers are different than shown, consult factory!

## 7 Conductor Cable

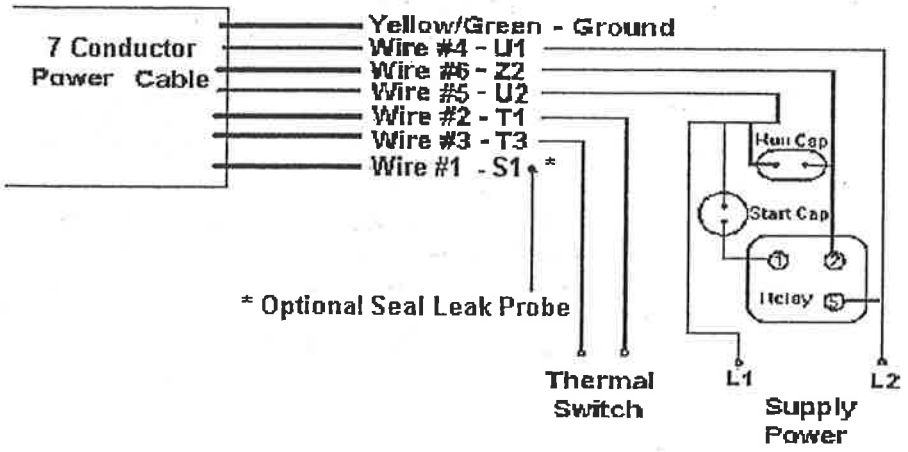


## 10 Conductor Cable

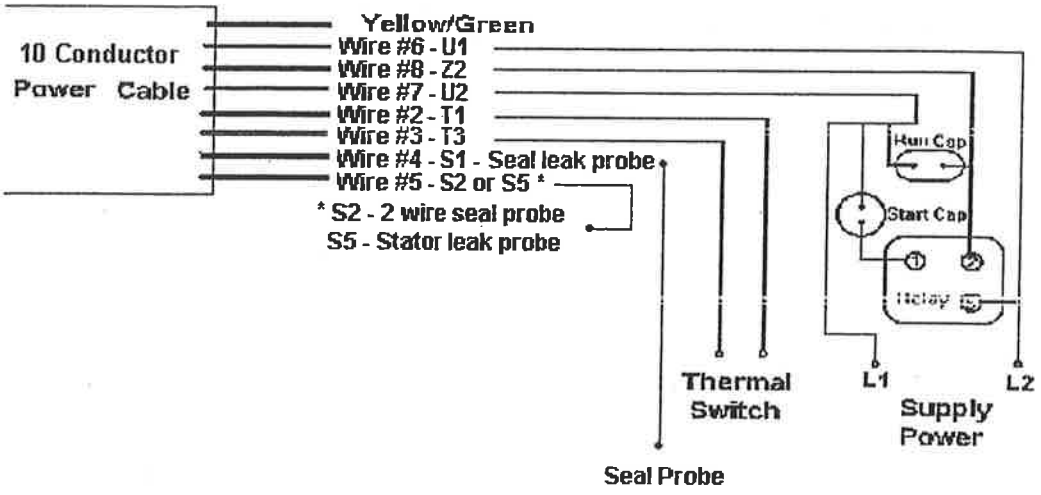

# C, D & T Motor Capacitor Sizing Chart

| Pump Model | Start Capacitor | Run Capacitor | Cap Kits |
|---|---|---|---|
| AMX334-434/1-1422/C/C | 80uf@330V | 40uf @370V | 8807010 |
| AMX334-434/1-142/2.5D | 80uf @ 330V | 50uf @ 370V | 8857060 |
| AMX334-434/1-142/2.9T/C | 60uf @ 330V | 40uf @ 370V | 8857065 |
| AMX334-434/1-155/3.6D | 80uf @ 330V | 50uf @ 370V | 8857060 |
| AMX334-434/1-155/4.3T/C | 100uf @ 330V | 50uf @ 370V | 8857035 |
| AMX334-434/1-155/5.1T/C | 100uf @ 330V | 50uf @ 370V | 8857035 |
| AMX334-434/1-178/3.6D | 80uf @ 330V | 50uf @ 370V | 8857060 |
| AMX334-434/1-178/4.3T/C | 100uf @ 330V | 50uf @ 370V | 8857035 |
| AMX334-434/1-178/5.1T/C | 100uf @ 330V | 50uf @ 370V | 8857035 |
| AMX334-434/1-184/5.1T/C | 100uf @ 330V | 50uf @ 370V | 8857035 |
| AMX334-434/1-193/5.1T/C | 100uf @ 330V | 50uf @ 370V | 8857035 |
| AMX334-434/1-193/6.7T/C | 120uf @ 330V | 60uf@ 370V | 8857070 |
| AMX334-434/1-206/6.7T/C | 120uf@ 330V | 60uf@ 370V | 8857070 |
| AMX334-434/1-206/9.7T/C | 150uf @ 330V | 80uf@370V | 8857075 |
| AMX334-434/1-218/9.7T/C | 150uf@330V | 80uf@370V | 8857075 |
| AMX334-434/1-228/9.7T/C | 150uf@330V | 80uf@370V | 8857075 |
| AMX334-434/1-228/11.4T/C | 250uf@330V** | 120uf@370V* | 8857080 |
| AMX334-434/1-235/11.4T/C | 250uf@330V** | 120uf@370V* | 8857080 |
| AMX334-434/1-250/11.4T/C | 250uf@330V** | 120uf@370V* | 8857080 |

** (2) 60uf run capacitors in parallel are required.*
*** (1) 150uf & 100uf start capacitor in parallel required.*

***Consult factory for A Frame motors with centrifugal switch.**

## External Seal Probe Wiring

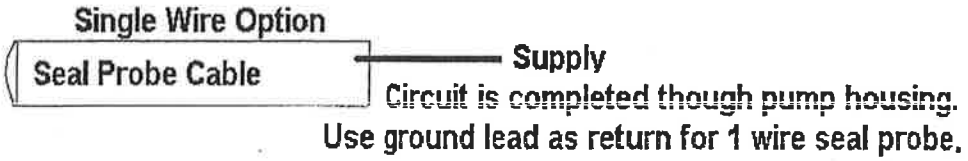


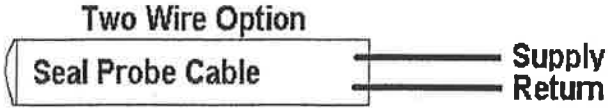


**Seal Probes must be connected to a Homa Go Switch or suitable controller to operate.**

7.) Starting Devices

Are pumps being started DOL, or with Soft Start device. Indicate manufacturer of Soft Starter. _____

Are any vibrations evident while pump is being controller by the soft starter? _____

Are pumps being operated with VFD (Variable Frequency Drive)? _____

Please indicate brand and model VFD: _____

Are load reactors being used between VFD output and pump? _____ Please indicate size _____

What ramp up and decel time is the VFD set for? Accel _____ seconds, Decel: _____ seconds

What is the minimum frequency the pump can operate at in this system? _____Hz. Is low speed limit set?_____

8.) Final Check:

Are Thermal Switches properly wired? _____What Over-temperature Relay is being used? _____

Is Pump Seated On Discharge Properly? _____ Check For Leaks? _____

Does Check Valves Operate Properly? _____

Flow: Does Station Appear To Operate At Proper Rate _____

Vibration Level: Measured _____ Observed_____

Has the cooling jacket been vented? _____ Is a permanent cooling jacket vent installed? _____

COMMENTS: _____

9.) Equipment Difficulties During Start-Up:_____

_____

_____

_____

10.) I Certify this Report to be accurate.

Authorized Homa Service Representative:

_____ Phone #_____

(Signature)

DATE_____

Pump Station Owner/ Operator

_____ Phone # _____

(Signature)

DATE _____

# A Series Technical Details

**Seal Chamber Oil: White Mineral Oil (Chevron Lubricating Oil FM 32, 46, 68)**

**Seal Oil Volume**

| | |
|---|---|
| ALL N FRAME MOTORS | 2.5L |
| ALL T FRAME MOTORS | 2.5L |
| ALL P FRAME MOTORS | 3.7L |
| CURRENT D MOTORS | .9L |

F, G & H FRAME SEAL OIL VOLUTE VARY BY HP, PLEASE CONSULT FACTORY WITH SPECIFIC PUMP MODEL.

**Seal Oil Level**

With pump lying on its side and oil port at 12:00, measure from the top of housing with gasket in place, to the oil level.

A Series T, N & P motors: 1 1/2" from top of housing to oil level

**Minimum Distance between 2 pumps**

| | 3" Discharge | 4" Discharge | 6" Discharge | 8" & Larger |
|---|---|---|---|---|
| **AK** | Min N/A | Min 10" | Min 13" | Please consult factory for layout information |
| **AV** | Min N/A | Min 10" | Min N/A | |
| **AMX** | Min 8" | Min 10" | Min 13" | |

# Warranty

## *Municipal Installations*

## "A" Series Pumps

HOMA Pump Technology Incorporated (referred to hereafter as the Company) warrants its A Series pumps to be free from defects in workmanship and materials for the period defined below, from date of shipment to end customer, when used in a Municipal Sewage Collection or Treatment System or similar pumping application pumping raw sewage or municipal waste water of a non-corrosive, non-abrasive nature.

HOMA Pumps, when used in a Sewage Lift Station for intermittent duty cycle (less than 50% duty cycle) at a fixed speed shall be warranted for a period of 5 years as per the below terms.

HOMA Pumps, when used in conjunction with VFD drives, or in fixed speed applications of a more continuous duty cycle (50% or more) shall be warranted for a period of 12,000 hrs. of operation as per the below terms.

Important: Monitoring devices (ex. thermal switch, seal probe, etc) supplied with pump must be properly wired into a circuit within the control panel that will provide adequate protection to the pump. Failure to properly connect and utilize provided monitoring devices will invalidate this warranty.

The Company shall pay the following share of refurbishing costs provided the complete pump and power cable / defective component is returned prepaid to the HOMA Repair Center in Ansonia, CT or an Authorized HOMA Service Center. Labor charges for warranty repairs shall not be assumed by the Company for repairs made after one (1) year from date of shipment to end customer. All returns must have prior written authorization from the Company prior to shipment.

| | | TIME IN FIELD | | | |
|---|---|---|---|---|---|
| **Intermittent Duty** | **Months:** | **0-18** | **19-31** | **32-45** | **46-60** |
| **Continuous Duty** | **Hours:** | **0 - 3000** | **3000 - 6000** | **6000 - 9000** | **9000 - 12,000** |
| | **Warranty:** | **100%** | **75%** | **50%** | **25%** |

Time in field shall be determined from shipment date to date warranty claim is registered with Company.

Field Start-up Report, along with control panel wiring diagrams and bills of material must be provided with any warranty claim.

This warranty excludes failures caused by improper mechanical or electrical installation, defects or imbalance in power supply or electrical protection, abrasive wear or improper maintenance or service activities. There must be no splice in the electrical cable within the wet well and pump thermal overload protection must be properly wired into control panel.

The Company's sole obligation under this warranty shall be to make repairs and/or replace parts when necessary on products that have been returned and found to be defective by the Company. The Company shall not be liable for any special, indirect, or consequential damages of any kind. Major components not manufactured by the Company are covered by the original manufacturer's warranty in lieu of this warranty.

***The Company will not be held responsible for travel expenses , rented equipment, outside contractors fees, or unauthorized repair expenses.***

The company neither assumes nor authorizes any person or other company to assume for it, any other obligation in connection with the sale of its equipment. Any enlargement or modification of this Warranty by a Representative, Distributor or other Sales Agent is expressly forbidden by the company. This warranty shall extend only to the original Owner and shall not apply to any products that have been repaired or altered without the Company's consent or have been subject to misuse, accident or neglect.

**NO OTHER WARRANTIES EXPRESS OR IMPLIED, INCLUDING IMPLIED WARRANTIES OF MERCHANTABILITY AND FITNESS FOR A PARTICULAR PURPOSE WILL APPLY.**

## Accessories

| Qty | | Mfg/Description | Part Number |
|---|---|---|---|
| 3 | Auto Coupling Assembly | HOMA, 6", Elbow, Pump Claw And Anchor Bolts Included | |
| 3 | Upper Rail Bracket | HOMA, Included with Auto Coupling Assembly | |
| 3 | Discharge Base | HOMA, Included with Auto Coupling Assembly | |
| 3 | Seal Probe | HOMA | |
| 1 | Float Bracket | Halliday, Stainless Steel | J4A |
| 6 | Guide Rail | 2" x 5', Schedule 40, Galvanized | |

HALLIDAY PRODUCTS

## ~~STAINLESS STEEL CABLE~~

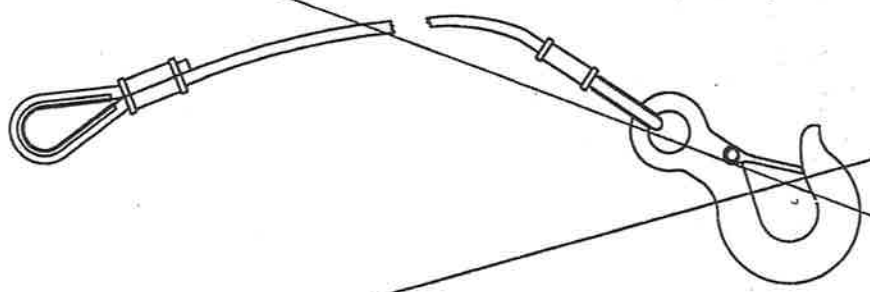

## SERIES K
(STAINLESS STEEL CABLE)

### STANDARD FEATURES:

- COMPLETE WITH HOOK AND EYE
- 1/4" DIA. STAINLESS STEEL CABLE TYPE 304 (TYPE 316 OPTIONAL)
- 1285 LBS. SAFE LOAD
- STAINLESS STEEL THIMBLES
- NICOPRESS SLEEVES
- 1 1/2 TON EYE HOOK WITH STAINLESS STEEL SAFETY LATCH
- TYPE 316 STAINLESS STEEL HARDWARE AVAILABLE
- VARIOUS CONFIGURATIONS AVAILABLE
- ANY LENGTH (SPECIFY)

## STAINLESS STEEL CABLE HOLDER

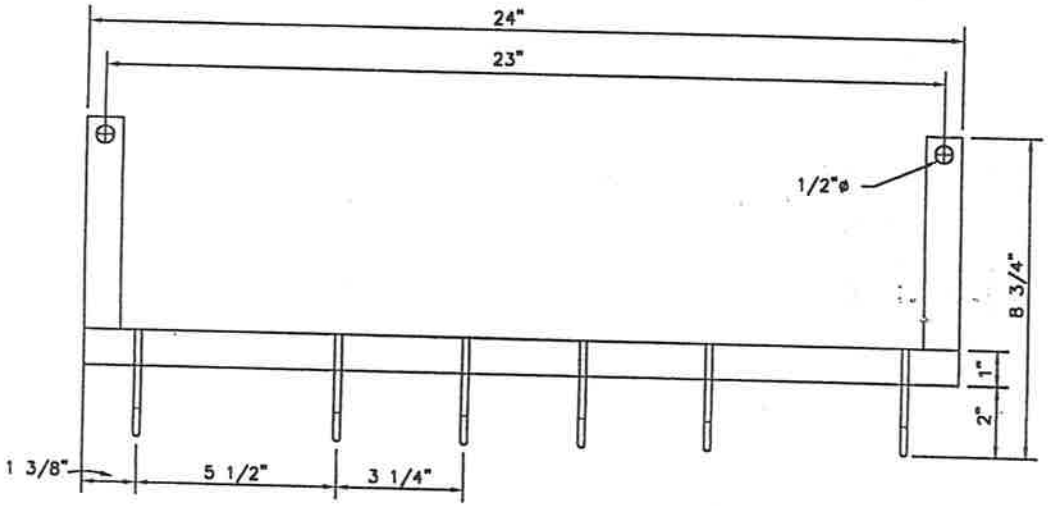


## SERIES J
(STAINLESS STEEL CABLE HOLDER)

### STANDARD FEATURES:

- STAINLESS STEEL TYPE 304 (TYPE 316 OPTIONAL)
- 6 HOOKS STANDARD
- USED FOR FLOAT SWITCHES AND LIFTING CABLES
- WALL OR ACCESS FRAME MOUNTING

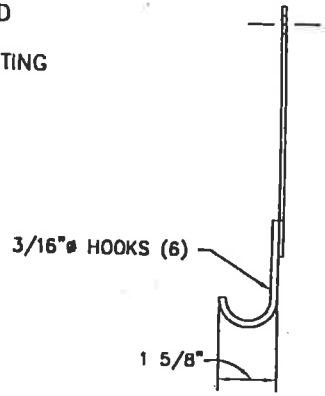

## Control

| Qty | | Mfg/Description | Part Number |
|---|---|---|---|
| 1 | Control Manufac. | Myles ElectroDynamics | Triplex |
| 1 | Pressure Transducer | Geotech, Submersible, 0-2PSI 4-20mA, 30' Cable | 82051000 |
| 2 | Float Switch | SJE Rhombus, 30' N/O Mechanically Activated | 1006053 |

# Geotech Gauge Pressure Transducers

Geotech's submersible pressure transducers are designed for ruggedness and long life to meet the harsh environments encountered in liquid level measurement and control.

## FEATURES

- High static accuracy and repeatability
- 100% computer tested and calibrated
- Temperature compensated
- Signal outputs of 4-20 mA or 1-5 Volt output
- User specified pressure ranges from 3–100 psi gauge
- 500' maximum cable length
- All wetted materials are #316 stainless steel
- Select between polyurethane or Tefzel® jacketed cable
- Sensor has ¼" NPT process fitting with protective cap
- Cable incorporates vent line to allow barometric compensation of level readings
- Field replaceable vent line desiccant cartridge
- Optional surge suppressor for lightning protection (requires both well and downwell components)

## APPLICATIONS

- Groundwater Monitoring
- Surface Water Monitoring
- Well Monitoring
- Wetted Studies
- Remediation Pump Control
- Landfill Pump Control
- Fluid Level Control

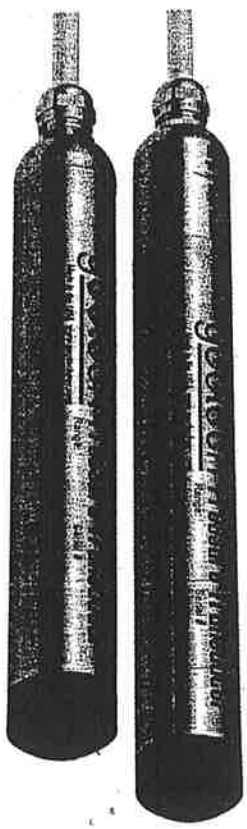

*Gauge Pressure Transducer*

*Gauge Pressure Transducer with Optional Surge Suppressor*

*Replaceable Desiccant Cartridge*

## SPECIFICATIONS

**Electrical:**

| | |
|---|---|
| **Supply Voltage** | 12-36 Volt DC |
| **Supply Current** | 25 mA |
| **Output** | 1-5 Volt DC<br>4-20 mA |

**Performance:**

| | |
|---|---|
| **Pressure Ranges (psi)** | 0-3, 0-5, 0-15, 0-30, 0-50, 0-100 |
| **Accuracy** | ±0.1% of full scale |
| **Non-linearity** | .07% of full scale |
| **Repeatability** | 0.015% of full scale |
| **Pressure Hysteresis** | 0.010% of full scale |
| **Zero Error** | ±0.1% of full scale |
| **Span Error** | ±0.1% of full scale |
| **Compensated Temperature** | -20° to 85°C |
| **Operating Temperature** | -40° to 125°C |
| **Response Time** | 2 milliseconds |
| **Life** | 1 million pressure cycles |

**Physical:**

| | |
|---|---|
| **Sensor Length** | 7 ⅛" |
| **Sensor Diameter** | 1" or .72" |
| **Sensor Weight** | 12.28 oz. (348g) |
| **Proof Pressure** | 3x psi |
| **Burst Pressure** | 5x psi |
| **Media Compatibility** | Liquids or gases compatible with 316 SS |

**Note:** Probe is protected from reverse polarity supply connection.

# SJE MILLIAMPMASTER™ Control Switch

**Mechanically-activated control switch designed to activate low current control panels and alarms.**

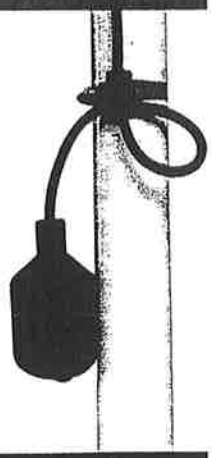

This wide-angle or narrow-angle control switch offers reliable low current control for AC and DC applications in potable water, wastewater, and sewage. The internal switching mechanism has sealed gold cross-point contacts for reliable low current operation. Common applications include PLC (programmable logic controller) panels, IS panels with intrinsically safe barriers, low current solar applications, and other low current control panels and alarms applications.

The wide-angle version activates/deactivates approximately 4" above and below horizontal with a 3.5" tether. The narrow angle version activates/deactivates at approximately 1.5" above and below horizontal with a 3.5" tether.

**Normally Open Model (high level)**
The control switch turns on (closes) when the float tips **above** horizontal signaling a high level, and turns off (opens) when the float drops below horizontal.

**Normally Closed Model (low level)**
The control switch turns on (closes) when the float drops **below** horizontal signaling a low level, and turns off (opens) when the float tips above horizontal.

## FEATURES

- Passed NSF Standard 61 protocol by an approved Water Quality Association laboratory.
- Low current, non-arching applications down to 0.160 mA at 125 VAC.
- Mechanically-activated, snap action contacts.
- High impact, corrosion resistant polypropylene float housing.
- Not sensitive to rotation.
- UL Listed for use in non-potable water and sewage.
- CSA Certified.
- Three-year limited warranty.

LR54245 LISTED 83N2

Hydraulic MEMBER Water Quality ASSOCIATION

## OPTIONS

**This switch is available:**

- for normally open (high level) applications or normally closed (low level) applications.
- with narrow or wide-angle pumping ranges.
- in standard cable lengths of 10, 15, 20, or 30 feet.
- with two mounting options that allow for flexibility in installation:

  **Mounting Clamp:** for applications where the switch can be attached to a discharge pipe or similar mounting device.

  **Externally Weighted:** for applications where the switch can be suspended from above.

## SPECIFICATIONS

**CABLE:** flexible 18 gauge, 2 conductor (UL,CSA) SJOW, water-resistant (CPE) jacket

**FLOAT:** 2.74 inch diameter x 4.83 inch long (7.0 cm x 12.3 cm), high-impact, corrosion resistant, polypropylene housing for use in sewage and water up to 140°F (60°C)

**MAXIMUM WATER DEPTH:** 30 feet (9 meters), 13 psi

**ELECTRICAL:**

**125 VAC**
**Maximum Electrical Load:** 0.1 amps
**Minimum Electrical Load:** 0.160 milliamps

**30 VDC**
**Maximum Electrical Load:** 0.1 amps
**Minimum Electrical Load:** 0.160 milliamps

**5 VDC**
**Minimum Electrical Load:** 1 milliamps

SJE Rhombus

PO Box 1708, Detroit Lakes, MN 56502
1-888-DIAL-SJE • 1-218-847-1317
1-218-847-4617 Fax
email: sje@sjerhombus.com
www.sjerhombus.com

# PUMP CONTROL PANEL

**Manufacturer:** Myles ElectroDynamics, Ltd.
**Model:** Triplex
**HP:** 25
**Volts:** 480
**Phase:** 3
**FLA:** 35.0
**Wire:** 3

**Includes the Following:**

698A U.L. Listed
Backup Float System
60" x 37" x 12" NEMA 4 Enclosure
Time Mark
Variable Frequency Drives for Flow Matching
Leg Mount
Interior Door
Panel Heating & Panel Light
Non-Fused Disconnect
Main, Motor, and Control Breakers
Elapsed Time Meter
Test Push Button
GFI Receptacle
Lightning, Primary and Secondary Arrestors
Intrinsically Safe Relay
Pump Run, Pump Fault, High Level, and Low Level Indicating Lights
Digital Display
Dry and Power Contacts
HOA Switches
Selector Switch
Push Button
Alarm Light

# PUMP SERVICE AND SUPPLY CO.

## ENGINEERING SUBMITTALS

| FILE | |
|---|---|
| JOB NAME | LOWER PASSAIC |
| REF NO. - | M1105313 |
| DATE - | 08/02/11 |
| CUSTOMER - | PUMP SERVICE AND SUPPLY |

| ELECTRICAL SERVICE | |
|---|---|
| VOLTAGE - | 480VAC |
| PHASE - | 3 PHASE |
| WIRES - | 4 WIRES |

| CONTROL SYSTEM | |
|---|---|
| TYPE OF CONTROL PANEL - | TRIPLEX |
| SENSING DEVICE - | FLOATS/TRANSDUCER |
| NUMBER OF MOTORS - | 3 |
| MOTOR H.P. - | 21HP |
| ENCLOSURE - | STEEL |
| NEMA RATING - | NEMA TYPE 4 |
| SIZE - | 60"X37"X12" |
| MODIFICATIONS - | DEAD FRONT DOOR |
| MOUNTING STYLE - | LEGS |

| PRODUCTION REQUIREMENT |
|---|
| [ ] APPROVAL WAIVED |
| [ ] APPROVED AS SUBMITTED |
| [ ] DRAWINGS APPROVED AS NOTED, "PROVIDE CLEAR AND PRECISE COMMENTS" |

APPROVAL SIGNATURE: _____

# BILL OF MATERIAL

| | | |
|---|---|---|
| **JOB NAME** | LOWER PASSAIC | **Date:08/02/11** |
| **CUSTOMER** | PUMP SERVICE AND SUPPLY | **REF NO.M1105313** |

| QTY | LEGEND | DESCRIPTION | MFG. | PART |
|---|---|---|---|---|
| 1 | | ENCLOSURE | HOFFMAN | A60HS3712LP |
| 1 | | BACK PANEL | HOFFMAN | A60P36 |
| 1 | | DEAD FRONT DOOR | SEE DWG. | 48"X36" |
| 1 | MCB | MAIN CIRCUIT BREAKER | CUTLER H. | FD3125L |
| 1 | CCB | CONTROL CIRCUIT BREAKER | CUTLER. H | QCR115 |
| 3 | VFD | VARIABLE FREQUENCY DRIVE | CUTLER H. | SVX025A1-4A1B1 |
| 3 | HOA | HAND OFF AUTO SELECTOR | CUTLER H. | E34VHBK1-Y1 |
| 6 | PL | INDICATING LIGHT | CUTLER H. | E22T3X26 |
| 9 | PL | INDICATING LIGHT | CUTLER H. | E22T2X26 |
| 1 | LGC | ALTERNATING RELAY | CROUZET | 88950043 |
| 1 | LEGS | PANEL FLOOR STAND | HOFFMAN | AFK1212 |
| 1 | DS | DISCONNECT SWITCH | CUTLER H. | F1S07C |
| 3 | MB | MOTOR BREAKER | CUTLER H. | GMCP050K2C |
| 3 | ETM | ELASPED TIME METERS | REDINGTON | 711-0160 |
| 3 | SFR | SEAL FAIL RELAY | SYMCOM | PC-102CICI-LT |
| 1 | CCT | CONTROL CIRCUIT TRANSFORMER | MICRON | B2K0BTZ13JKH |
| 5 | | SOCKETS | FINDER | 90.27 |
| 5 | CR | CONTROL RELAYS | FINDER | 60.13.8.120.0040 |
| 13 | CR | CONTROL RELAYS | FINDER | 60.12.8.120.0040 |
| 13 | | SOCKETS | FINDER | 90.26 |
| 1 | AL | DOME MOUNTED ALARM LIGHT | INGRAM | LRX-40 |
| 4 | F | FUSES | LITTELFUSE | BLN-5/250V |
| 4 | F | FUSES | LITTELFUSE | KLDR-15-600V |
| 1 | PL | INDICATING LIGHT | CUTLER H. | E22T9X26 |
| 2 | ISR | INTRINSICALLY SAFE RELAY | SYMCOM | ISS-101 |
| 1 | LA | LIGHTNING ARRESTOR | CUTLER H. | CHSA03 |
| 1 | HT/TH | PANEL HEATER WITH THERMOSTAT | INGRAM | AHC-50W |
| 1 | FL | FLASHER | SSAC | FS127 |
| 4 | RESET | RESET | CUTLER H. | E34PB4-51X |
| 3 | TD1 | TIME DELAY RELAY | FINDER | 85.02.0.125.0000 |
| 1 | | SOCKET | EDCO | PCB1B |
| 1 | ISB | INTRINSICALLY SAFE BARRIER | STAHL | 90010128016510 |
| 1 | SA2 | SECONDARY SURGE ARRESTOR | EDCO | PC-642C-030 |

| | | | | |
|---|---|---|---|---|
| 1 | GFCI | GROUND FAULT RECEPTACLE | HUBBELL | GFR5252IA |
| 1 | AEB | AUXILLARY EQUIPMENT BREAKER | CUTLER H. | QCR1020 |
| 1 | LC | LEVEL CONTROLLER | TIME MARK | 4042 (IN FEET) |
| 1 | SW | 4 POSITION SWITCH | CUTLER H. | E34VTBK1-23X |
| 1 | | FACE PLATE | CROUZET | 88970809 |
| | | | | |
| | | | | |
| | | | | |
| | | | | |
| | | | | |
| | | | | |
| | | | | |
| | | | | |
| | | | | |
| | | | | |
| | | | | |
| | | | | |
| | | | | |
| | | | | |

**NOTES: OR EQUAL ON ALL**

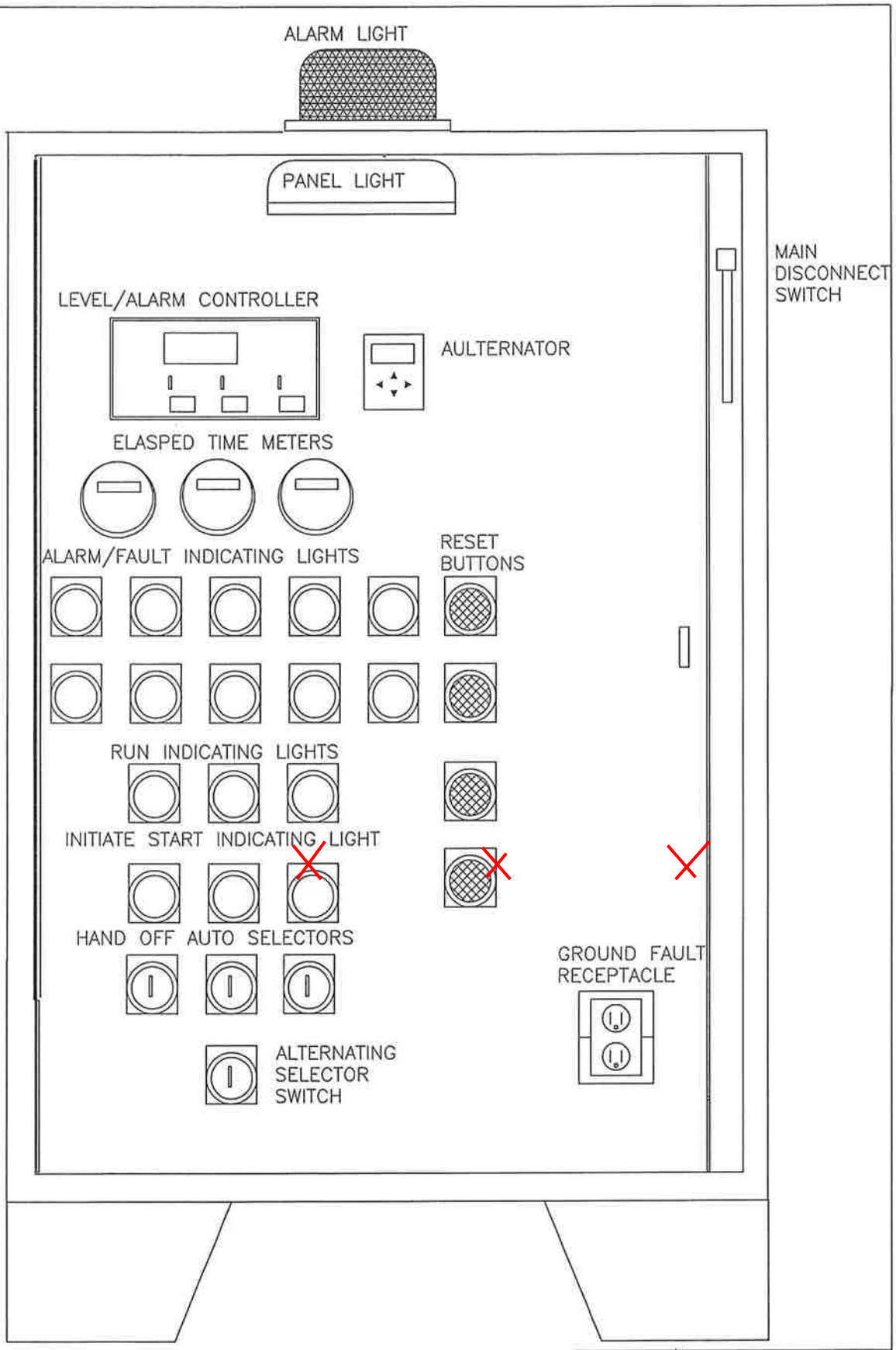


LAY OUT MAY VARY

| | |
|---|---|
| PROJECT | LOWER PASSAIC |
| DATE | 08/02/11 |
| DWG. BY RRS | CHK. BY DHM |

NOTE: LAY-OUT MAY VARY

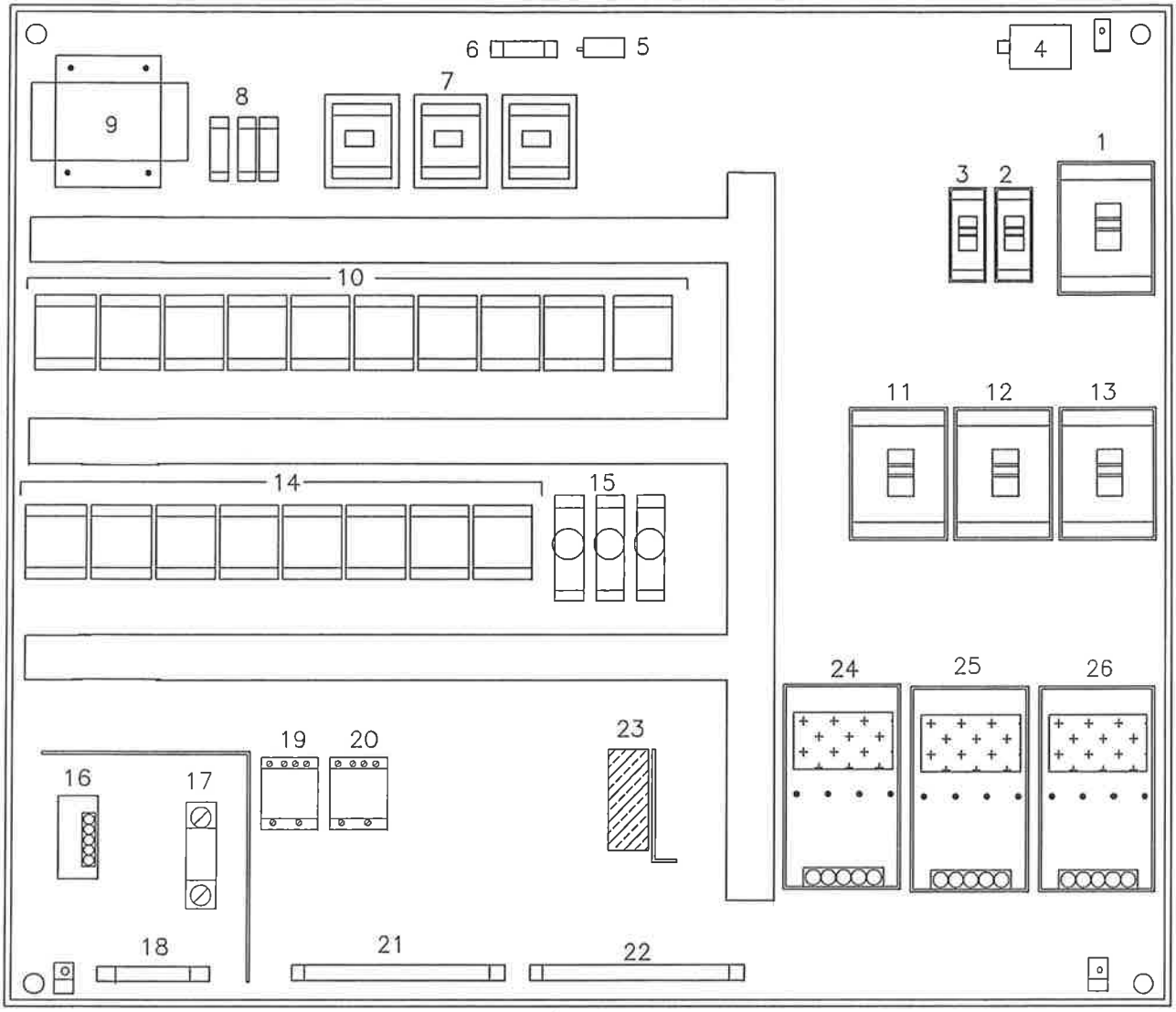


1-MAIN CIRCUIT BREAKER
2-CONTROL CIRCUIT BREAKER
3-AUXILLARY EQUIPMENT BREAKER
4-LIGHTNING ARRESTOR
5-FLASHER
6-TERMINAL STRIP A
7-SEAL/THERMAL FAIL RELAY 1 THRU 3
8-FUSES 1 THRU 3
9-CONTROL CIRCUIT TRANSFORMER
10-CONTROL RELAY 1 THRU 10
11-MOTOR BREAKER 1
12-MOTOR BREAKER 2
13-MOTOR BREAKER 3
14-CONTROL RELAY 11 THRU 18
15-TIME DELAY RELAY 1 THRU 3
16-SECONDARY SURGE ARRESTOR
17-INTRINSICALLY SAFE BARRIER
18-TERMINAL STRIP B
19-INTRINSICALLY SAFE RELAY 1
20-INTRINSICALLY SAFE RELAY 2
21-TERMINAL STRIP C
22-TERMINAL STRIP D
23-PANEL HEATER W/THERMOSTAT
24-VARIABLE FREQUENCY DRIVE 1
25-VARIABLE FREQUENCY DRIVE 2
26-VARIABLE FREQUENCY DRIVE 3

| | |
|---|---|
| PROJECT | LOWER PASSAIC |
| DATE | 08/02/11 |
| DWG. BY RRS | CK'D BY DHM |

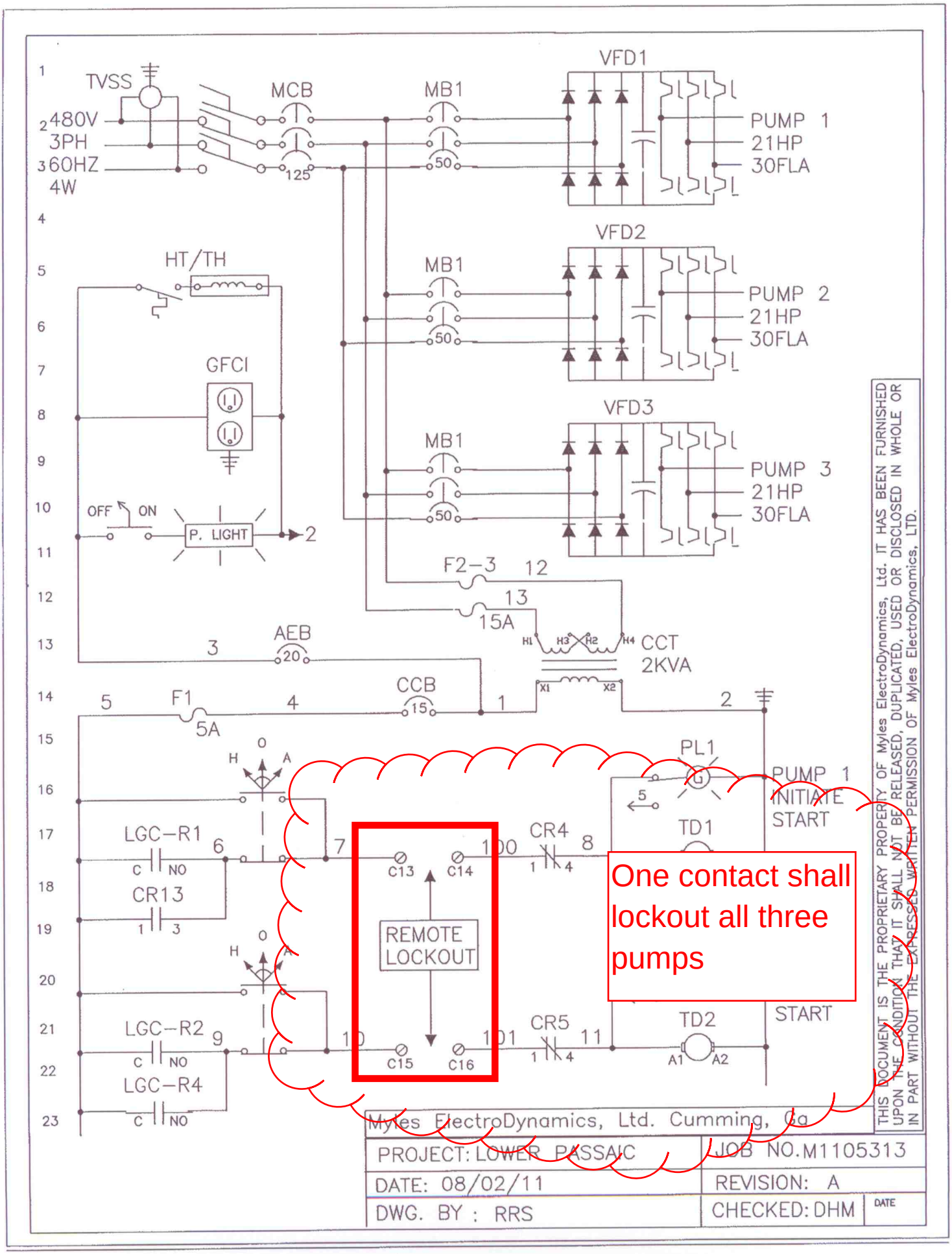
TVSS
480V
3PH
60HZ
4W
MCB
125
MB1
50
VFD1
PUMP 1
21HP
30FLA
VFD2
PUMP 2
21HP
30FLA
VFD3
PUMP 3
21HP
30FLA
HT/TH
GFCI
OFF
ON
P. LIGHT
F2-3
15A
AEB
20
CCT
2KVA
H1
H3
H2
H4
X1
X2
CCB
15
F1
5A
PL1
PUMP 1
INITIATE
START
TD1
LGC-R1
CR13
CR4
C13
C14
REMOTE
LOCKOUT
C15
C16
LGC-R2
LGC-R4
CR5
TD2
A1
A2
START
One contact shall lockout all three pumps
Myles ElectroDynamics, Ltd. Cumming, Ga
PROJECT: LOWER PASSAIC
JOB NO. M1105313
DATE: 08/02/11
REVISION: A
DWG. BY : RRS
CHECKED: DHM
DATE
THIS DOCUMENT IS THE PROPRIETARY PROPERTY OF Myles ElectroDynamics, Ltd. IT HAS BEEN FURNISHED UPON THE CONDITION THAT IT SHALL NOT BE RELEASED, DUPLICATED, USED OR DISCLOSED IN WHOLE OR IN PART WITHOUT THE EXPRESSED WRITTEN PERMISSION OF Myles ElectroDynamics, LTD.

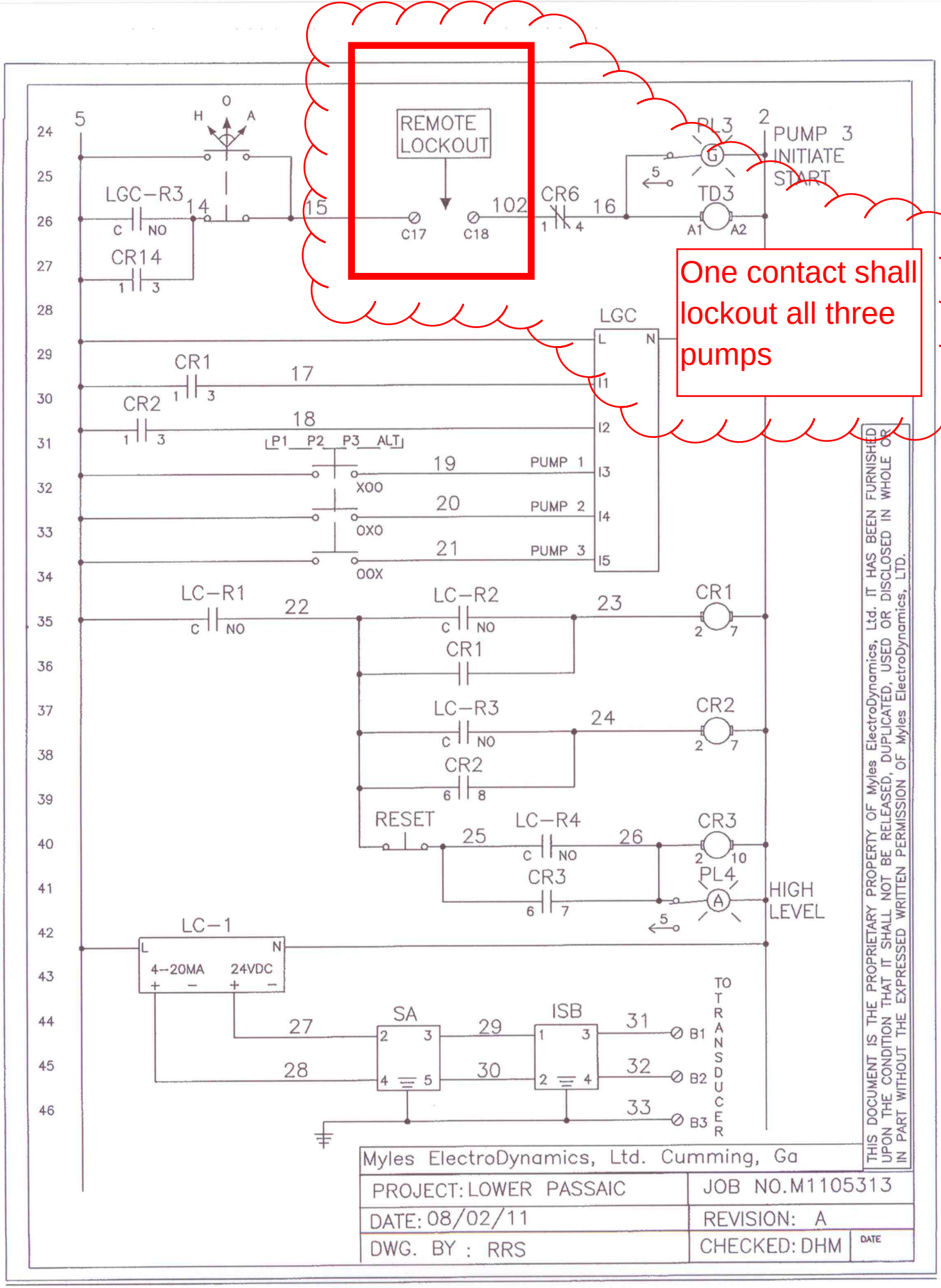
REMOTE LOCKOUT
One contact shall lockout all three pumps
PUMP 3 INITIATE START
PL3
TD3
CR6
LGC-R3
CR14
LGC
CR1
CR2
PUMP 1
PUMP 2
PUMP 3
LC-R1
LC-R2
LC-R3
LC-R4
RESET
CR3
PL4
HIGH LEVEL
LC-1
4-20MA
24VDC
SA
ISB
TO TRANSDUCER
Myles ElectroDynamics, Ltd. Cumming, Ga
PROJECT: LOWER PASSAIC
JOB NO. M1105313
DATE: 08/02/11
REVISION: A
DWG. BY : RRS
CHECKED: DHM
DATE
THIS DOCUMENT IS THE PROPRIETARY PROPERTY OF Myles ElectroDynamics, Ltd. IT HAS BEEN FURNISHED UPON THE CONDITION THAT IT SHALL NOT BE RELEASED, DUPLICATED, USED OR DISCLOSED IN WHOLE OR IN PART WITHOUT THE EXPRESSED WRITTEN PERMISSION OF Myles ElectroDynamics, LTD.

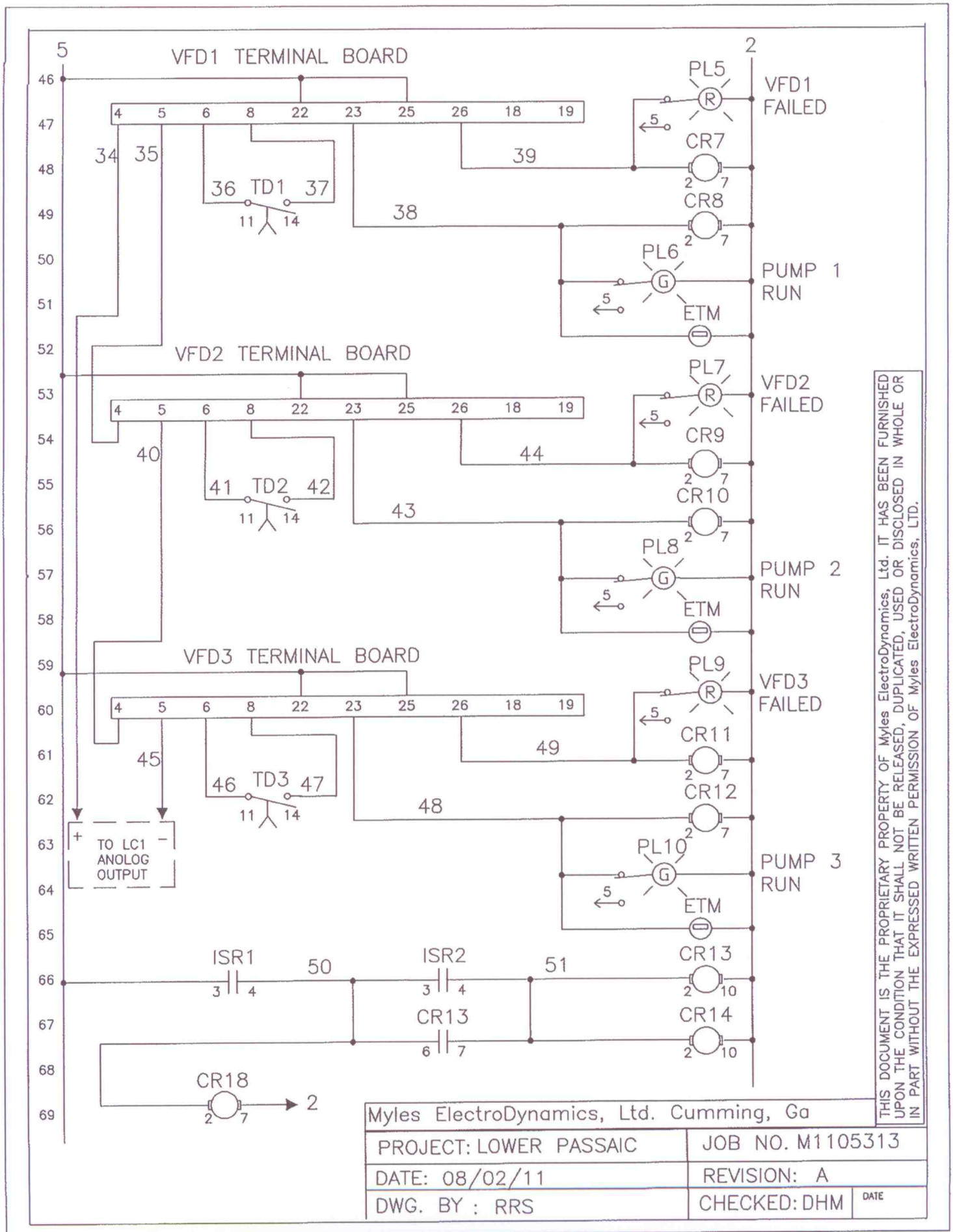
VFD1 TERMINAL BOARD
VFD2 TERMINAL BOARD
VFD3 TERMINAL BOARD
PL5
VFD1 FAILED
CR7
CR8
PL6
PUMP 1 RUN
ETM
PL7
VFD2 FAILED
CR9
CR10
PL8
PUMP 2 RUN
PL9
VFD3 FAILED
CR11
CR12
PL10
PUMP 3 RUN
TD1
TD2
TD3
TO LC1 ANOLOG OUTPUT
ISR1
ISR2
CR13
CR14
CR18
Myles ElectroDynamics, Ltd. Cumming, Ga
PROJECT: LOWER PASSAIC
JOB NO. M1105313
DATE: 08/02/11
REVISION: A
DWG. BY : RRS
CHECKED: DHM
DATE
THIS DOCUMENT IS THE PROPRIETARY PROPERTY OF Myles ElectroDynamics, Ltd. IT HAS BEEN FURNISHED UPON THE CONDITION THAT IT SHALL NOT BE RELEASED, DUPLICATED, USED OR DISCLOSED IN WHOLE OR IN PART WITHOUT THE EXPRESSED WRITTEN PERMISSION OF Myles ElectroDynamics, LTD.

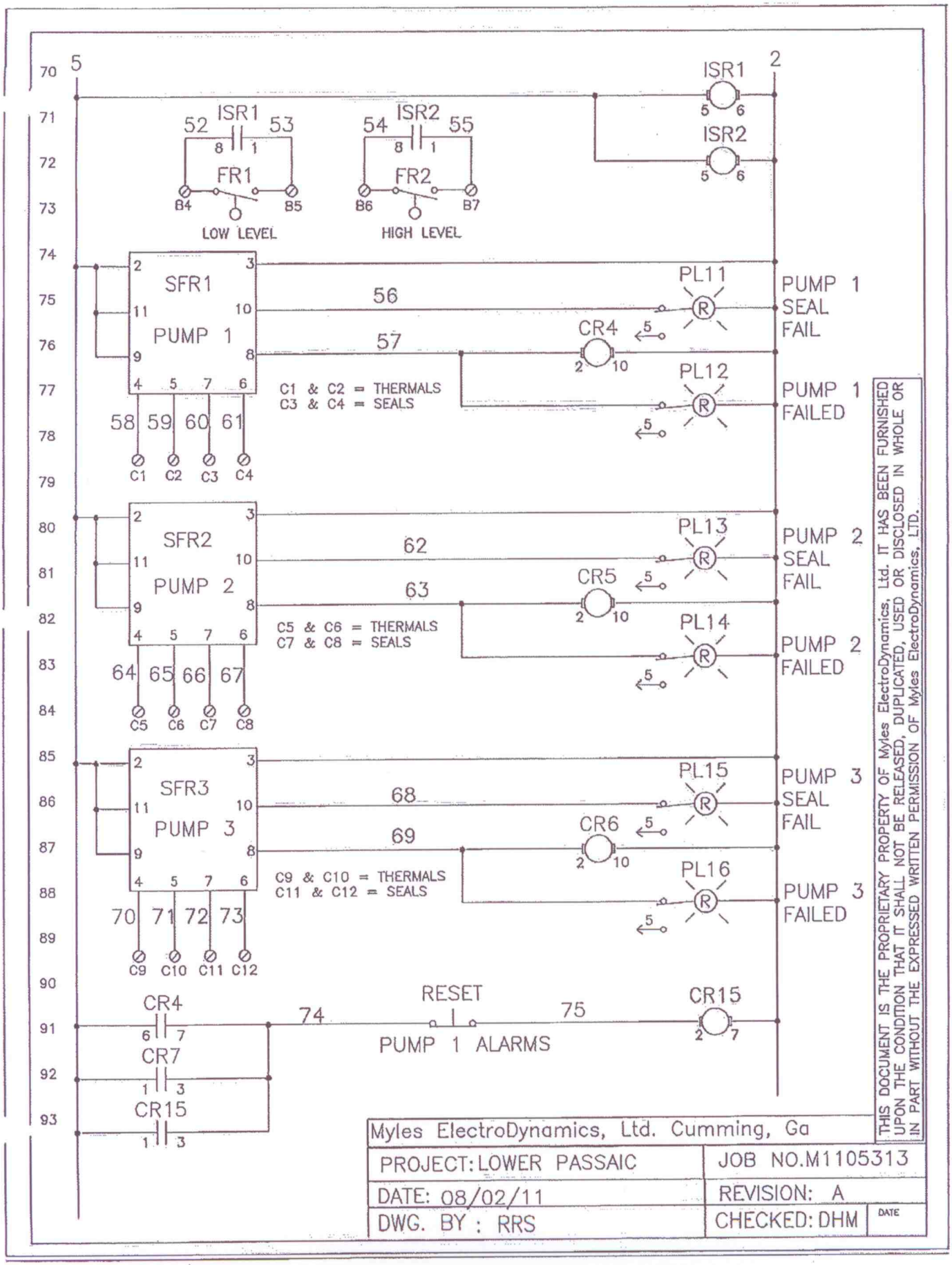
ISR1
ISR2
FR1
FR2
LOW LEVEL
HIGH LEVEL
SFR1
PUMP 1
SFR2
PUMP 2
SFR3
PUMP 3
C1 & C2 = THERMALS
C3 & C4 = SEALS
C5 & C6 = THERMALS
C7 & C8 = SEALS
C9 & C10 = THERMALS
C11 & C12 = SEALS
PL11
PL12
PL13
PL14
PL15
PL16
CR4
CR5
CR6
CR7
CR15
PUMP 1 SEAL FAIL
PUMP 1 FAILED
PUMP 2 SEAL FAIL
PUMP 2 FAILED
PUMP 3 SEAL FAIL
PUMP 3 FAILED
RESET
PUMP 1 ALARMS
THIS DOCUMENT IS THE PROPRIETARY PROPERTY OF Myles ElectroDynamics, Ltd. IT HAS BEEN FURNISHED UPON THE CONDITION THAT IT SHALL NOT BE RELEASED, DUPLICATED, USED OR DISCLOSED IN WHOLE OR IN PART WITHOUT THE EXPRESSED WRITTEN PERMISSION OF Myles ElectroDynamics, LTD.
Myles ElectroDynamics, Ltd. Cumming, Ga
PROJECT: LOWER PASSAIC
JOB NO. M1105313
DATE: 08/02/11
REVISION: A
DWG. BY : RRS
CHECKED: DHM
DATE

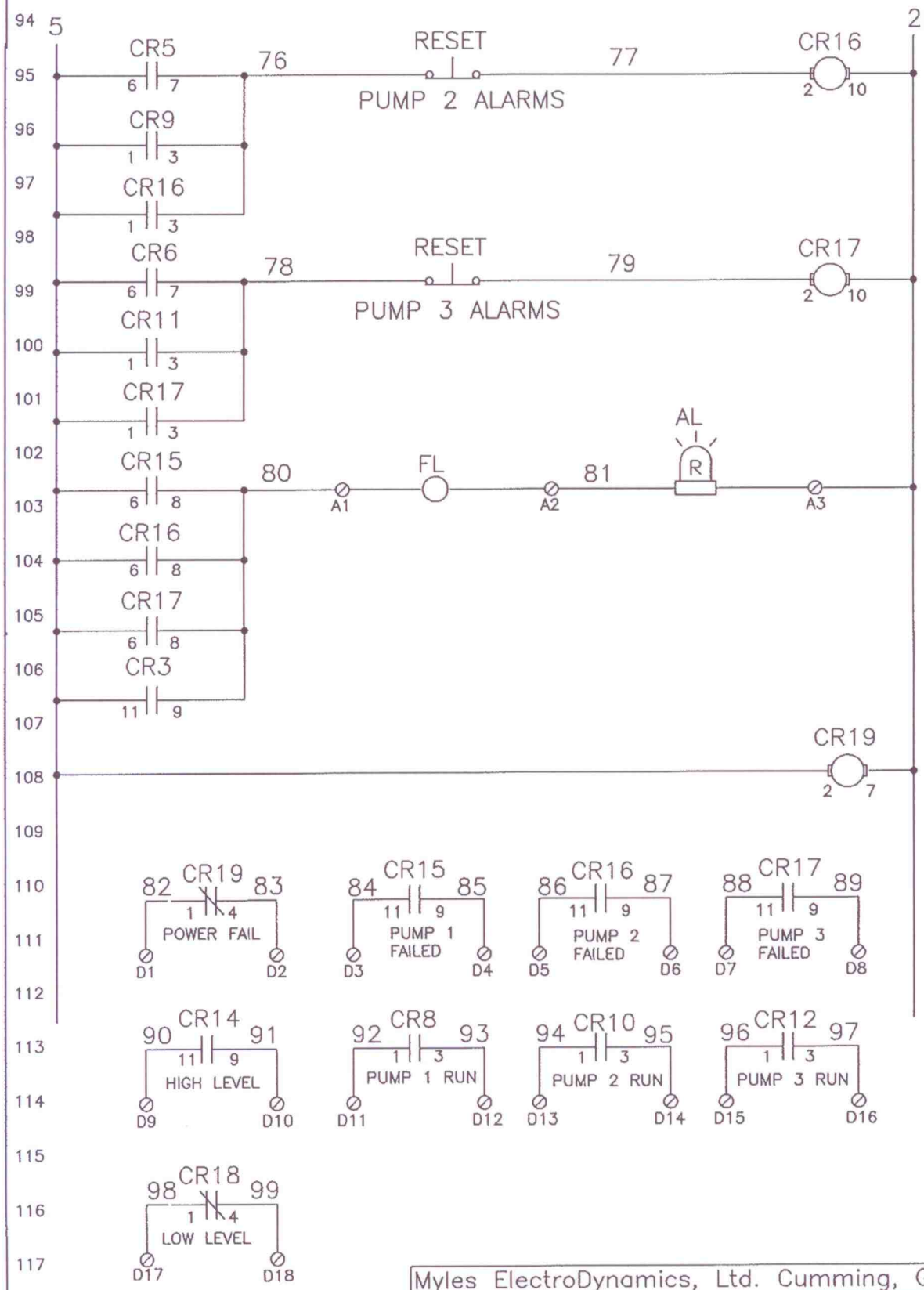


THIS DOCUMENT IS THE PROPRIETARY PROPERTY OF Myles ElectroDynamics, Ltd. IT HAS BEEN FURNISHED UPON THE CONDITION THAT IT SHALL NOT BE RELEASED, DUPLICATED, USED OR DISCLOSED IN WHOLE OR IN PART WITHOUT THE EXPRESSED WRITTEN PERMISSION OF Myles ElectroDynamics, LTD.

| | |
|---|---|
| Myles ElectroDynamics, Ltd. Cumming, Ga | |
| PROJECT: LOWER PASSAIC | JOB NO. M1105313 |
| DATE: 08/02/11 | REVISION: A |
| DWG. BY : RRS | CHECKED: DHM DATE |

# Type 4 and 12 Wall-Mount Disconnect Enclosures

## Disconnect Enclosure with Clamps, Type 4

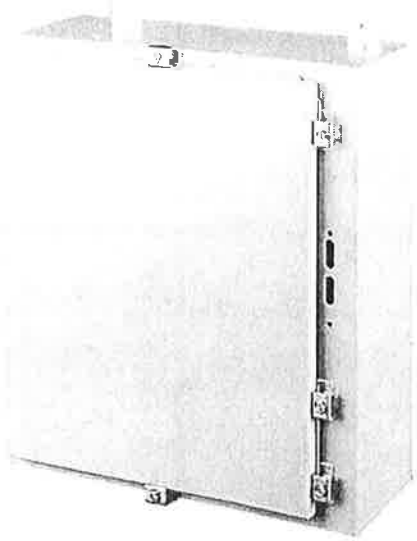

### Industry Standards

UL 508A Listed; Type 4, 12; File No. E61997
cUL Listed per CSA C22.2 No. 94; Type 4, 12; File No. E61997

NEMA/EEMAC Type 3, 4, 12, 13
CSA File No. 42186: Type 4, 12
IEC 60529, IP66

### Application

For disconnect applications in which a clamp-secured door is preferred. Clamps on three sides of the door keep liquid and contaminants out. Preferred cutout accepts major brand disconnect switches and circuit breakers.

### Furnished with Enclosures

1. Bracket welded to door for attaching disconnect door catch (interlock)
2. Instructions to locate and install disconnect switches, circuit breakers and operating mechanisms

### Specifications

- 14 gauge steel
- Seams continuously welded and ground smooth
- External mounting brackets
- External-formed flange around all sides of enclosure opening
- Stainless steel door clamps on three sides of door
- Removable door with continuous hinge
- Data pocket is high impact thermoplastic
- Type 4 rated door gasket
- Collar studs for mounting optional panels
- Holes in body for mounting disconnect operating handle and operating mechanism
- Bonding provision on door
- Bracket welded to door for attaching disconnect door catch (interlock) and instructions for installing disconnects

### Finish

ANSI 61 gray polyester powder coating inside and out.

### Accessories

*See also Accessories.*
Blank Adapter Plates, Mild Steel
Industrial Corrosion Inhibitors
Electric Heater
PANELITE™ Enclosure Lights Overview
Panels for Type 3R, 4, 4X, 12 and 13 Enclosures

### Modification and Customization

Hoffman excels at modifying and customizing products to your specifications. Contact your local Hoffman sales office or distributor for complete information.

Bulletin: A19

Standard Product

| Catalog Number | AxBxC in./mm | Panel | Conductive Panel | Panel Size DxE in./mm | Data Pocket Size in./mm | Number of Clamps |
|---|---|---|---|---|---|---|
| A24HS2108LP | 24.00 x 21.38 x 8.00<br>610 x 543 x 203 | A24P20 | A24P20G | 21.00 x 17.00<br>533 x 432 | 6.00 x 6.00<br>152 x 152 | 5 |
| A24HS2508LP | 24.00 x 25.38 x 8.00<br>610 x 645 x 203 | A24P24 | A24P24G | 21.00 x 21.00<br>533 x 533 | 6.00 x 6.00<br>152 x 152 | 5 |
| A30HS2508LP | 30.00 x 25.38 x 8.00<br>762 x 645 x 203 | A30P24 | A30P24G | 27.00 x 21.00<br>686 x 533 | 12.00 x 12.00<br>305 x 305 | 5 |
| A36HS2508LP | 36.00 x 25.38 x 8.00<br>914 x 645 x 203 | A36P24 | A36P24G | 33.00 x 21.00<br>838 x 533 | 12.00 x 12.00<br>305 x 305 | 5 |
| A36HS3108LP | 36.00 x 31.38 x 8.00<br>914 x 797 x 203 | A36P30 | A36P30G | 33.00 x 27.00<br>838 x 686 | 12.00 x 12.00<br>305 x 305 | 7 |
| A42HS3112LP | 42.00 x 31.38 x 12.00<br>1067 x 797 x 305 | A42P30 | A42P30G | 39.00 x 27.00<br>991 x 686 | 6.00 x 6.00<br>152 x 152 | 10 |
| A42HS3712LP | 42.00 x 37.38 x 12.00<br>1067 x 949 x 305 | A42P36 | A42P36G | 39.00 x 33.00<br>991 x 838 | 12.00 x 12.00<br>305 x 305 | 10 |
| A48HS3712LP | 48.00 x 37.38 x 12.00<br>1219 x 949 x 305 | A48P36 | A48P36G | 45.00 x 33.00<br>1143 x 838 | 12.00 x 12.00<br>305 x 305 | 10 |
| A60HS3712LP | 60.00 x 37.38 x 12.00<br>1524 x 949 x 305 | A60P36 | A60P36G | 57.00 x 33.00<br>1448 x 838 | 12.00 x 12.00<br>305 x 305 | 11 |

Purchase panels separately.


© 2011 Pentair Technical Products

# Type 4 and 12 Wall-Mount Disconnect Enclosures

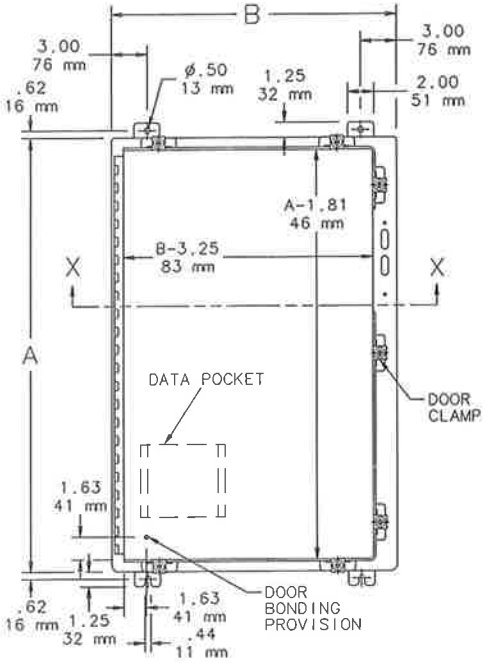


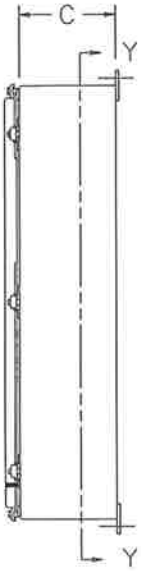


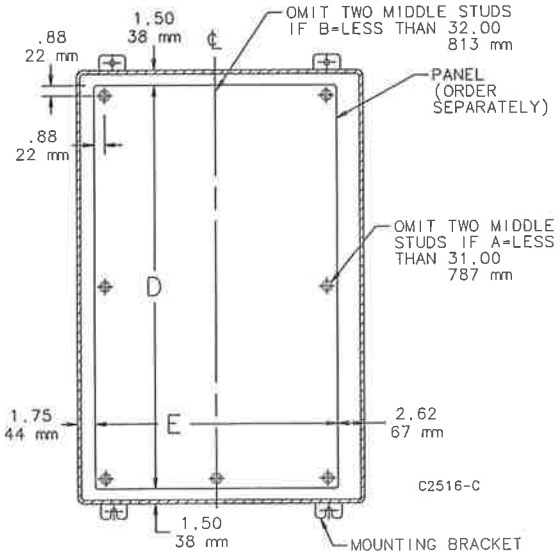


SECTION Y-Y

NOTE: 1. 12 gauge panels have flanges along two sides when the side dimension is more than 21.00 inches (533mm). Panels A24P20 and A24P24 have flanges on four sides.

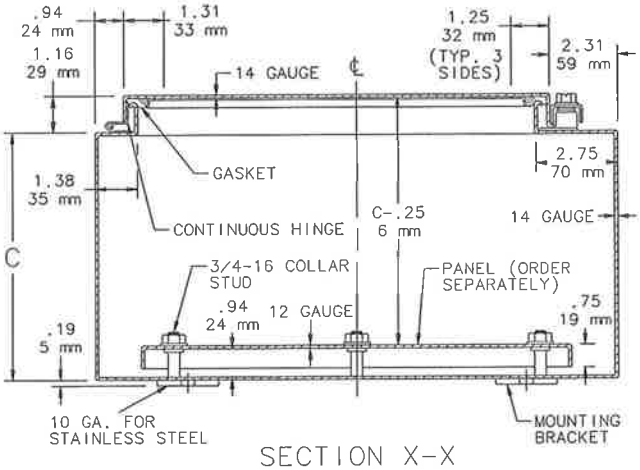


SECTION X-X

## Disconnect Mounting Space

Disconnects will occupy space on panel shown by dimensions E1, F1, and G1. Wiring space W1 is available when disconnect is installed in the enclosure.
E1 = 8.62 in. (219 mm) when C = 8.00 in. (203 mm)
E1 = 11.62 in. (294 mm) when C = 12.00 in. (305 mm)
W1 = Wiring Space

Refer to ***NATIONAL ELECTRICAL CODE, 2005*** article 430-10(b) for wiring space required for line side conductors to be connected to disconnect.

**Verify your application to determine whether wiring space is adequate.**

*Consult Space Occupied by Disconnect drawing to determine whether the disconnect device you are using will fit the enclosure size you have selected.*

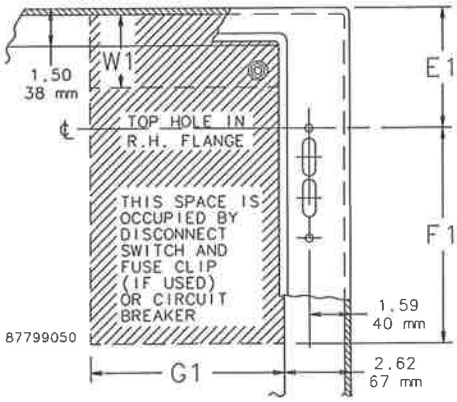


Consult disconnect manufacturer or see Disconnect Ordering Information at hoffmanonline.com under Technical Resources for F1 and G1 dimensions of various brands of disconnects.


© 2011 Pentair Technical Products

# Wall-Mount Preferred-Cutout Overview

## Preferred-Cutout Overview

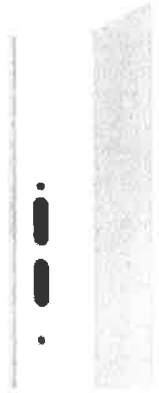

### Application

Enclosures having the preferred cutout are sized for use with up to 200A disconnect switches and up to 400A circuit breakers unless otherwise specified. The preferred cutout accepts the smaller operating handle whose mounting hole centers are 4.688 in. apart. Preferred cutouts are standard in mild steel wall-mount enclosures, modular enclosures and some select large mild steel enclosures. They are also present on all standard stainless steel offerings. Mild steel operator adapter plates with brand specific preferred cutouts are available for enclosures with a rectangular universal cutout.

Preferred cutouts are designed to house the following:

**Allen-Bradley**

- Bulletin 1494V disconnect switches with flange-mount variable-depth operating mechanisms and Bulletin 1494V flange-mount variable-depth operating mechanisms for circuit breakers
- Bulletin 140U flexible cable operating mechanisms for 140U molded case circuit breakers
- Bulletin 1494C cable-operated disconnect switches with flange-mount handles
- Bulletin 194RC cable-operated flange-mount handles for use with the NFPA 79 compliant 194R IEC rotary disconnect switches

*Allen-Bradley Bulletin 1494V-R1, -R2 and -W2 operating handles and Allen-Bradley Bulletin 1494F disconnect devices or Bulletin 1494D circuit breaker operators will NOT fit these enclosures.*

**ABB Controls** flange-mount variable-depth operating mechanisms for disconnect switches and circuit breakers. Also the cable version for circuit breakers.

**Eaton Cutler-Hammer** Type C361 flange-mount variable-depth operating mechanisms with disconnect switches and Type C371 flange-mount variable-depth operating mechanisms for circuit breakers.

**General Electric** Type STDA flange handles and variable-depth operating mechanisms for disconnect switches and circuit breakers. Also SPECTRAFLEX™ cable operators for circuit breakers.

**Siemens ITE** MAX FLEX® flange-mount variable-depth operating handles for circuit breakers.

**Schneider Square D®** Class 9422 disconnect switches with flange-mount variable-depth operating mechanisms or cable mechanisms and Class 9422 flange-mount variable-depth operating mechanisms or cable mechanisms for circuit breakers.
*These enclosures will NOT accept Square D Class 9422 bracket-mounted disconnect devices, Class 9422TG1 or TG2 devices.*

### Ordering

The disconnect switch, operating handle, and operating mechanism must be ordered from disconnect equipment supplier. See Technical Information in the Hoffman Specifier's Guide for wire bend space available when various manufacturers' disconnect switches are installed, or Disconnect Ordering Information at hoffmanonline.com for disconnect ordering guidelines and wire bend space available. Check the enclosure dimension drawings to verify the chosen disconnect switch will fit in the enclosure.


© 2011 Pentair Technical Products

# Wall-Mount Preferred-Cutout Overview

## Notes


© 2011 Pentair Technical Products

# Mounting Kits

## Floor Stand Kit

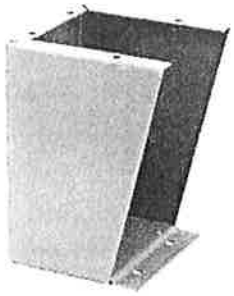

### Industry Standards

Product maintains UL/CSA Type 4, 4X (stainless steel only) and Type 12 when properly installed on Hoffman Type 4 or Type 12 enclosures.

### Application

Kits are easily installed on most wall-mount Hoffman enclosures. Can also be used to elevate Hoffman free-stand enclosures.

To install, drill holes in the bottom of the enclosure and bolt the floor stands to the enclosure.It is not necessary to remove the wall-mount brackets from the enclosure.

### Specifications

12 gauge steel floor stand has an ANSI 61 gray polyester powder finish over pretreated surfaces. Stainless steel floor stand is Type 304.

### Components

Each kit includes two stands. Two sets of floor stands are recommended for enclosures larger than double door free-stand enclosures.

### Ordering

Special heights, depths, materials and finishes can be provided on custom order. Consult factory for information.

Bulletin: A4SY, A80

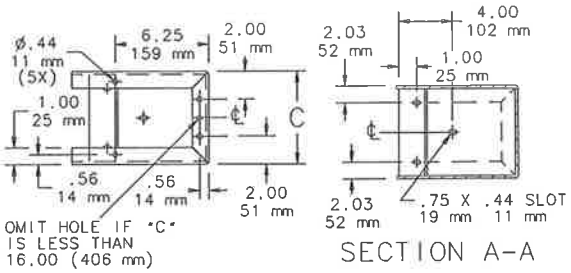


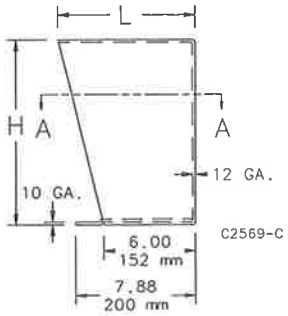


| Catalog Number | Material | Height, H (in.) | Height, H (mm) | Width, C (in.) | Width, C (mm) | L (in.) | L (mm) |
|---|---|---|---|---|---|---|---|
| AFK0608 | Steel | 6.00 | 152 | 8.06 | 205 | 7.06 | 179 |
| AFK0610 | Steel | 6.00 | 152 | 10.06 | 256 | 7.06 | 179 |
| AFK0612 | Steel | 6.00 | 152 | 12.06 | 306 | 7.06 | 179 |
| AFK0618 | Steel | 6.00 | 152 | 18.06 | 459 | 7.06 | 179 |
| AFK1208 | Steel | 12.00 | 305 | 8.06 | 205 | 8.12 | 206 |
| AFK1210 | Steel | 12.00 | 305 | 10.06 | 256 | 8.12 | 206 |
| AFK1212 | Steel | 12.00 | 305 | 12.06 | 306 | 8.12 | 206 |
| AFK1216 | Steel | 12.00 | 305 | 16.06 | 408 | 8.12 | 206 |
| AFK1218 | Steel | 12.00 | 305 | 18.13 | 461 | 8.12 | 206 |
| AFK1220 | Steel | 12.00 | 305 | 20.06 | 510 | 8.12 | 206 |
| AFK1808 | Steel | 18.00 | 457 | 8.06 | 205 | 9.17 | 233 |
| AFK1810 | Steel | 18.00 | 457 | 10.06 | 256 | 9.17 | 233 |
| AFK1812 | Steel | 18.00 | 457 | 12.06 | 306 | 9.17 | 233 |
| AFK1816 | Steel | 18.00 | 457 | 16.06 | 408 | 9.17 | 233 |
| AFK2408 | Steel | 24.00 | 610 | 8.06 | 205 | 10.23 | 260 |
| AFK2410 | Steel | 24.00 | 610 | 10.06 | 256 | 10.23 | 260 |
| AFK2412 | Steel | 24.00 | 610 | 12.06 | 306 | 10.23 | 260 |
| AFK2416 | Steel | 24.00 | 610 | 16.06 | 408 | 10.23 | 260 |
| AFK1208SS | Stainless Steel | 12.00 | 305 | 8.06 | 205 | 9.09 | 231 |
| AFK1210SS | Stainless Steel | 12.00 | 305 | 10.06 | 256 | 9.09 | 231 |
| AFK1212SS | Stainless Steel | 12.00 | 305 | 12.06 | 306 | 9.09 | 231 |
| AFK1216SS | Stainless Steel | 12.00 | 305 | 16.06 | 408 | 9.09 | 231 |
| AFK1218SS | Stainless Steel | 12.00 | 305 | 18.06 | 459 | 9.09 | 231 |
| AFK1224SS | Stainless Steel | 12.00 | 305 | 24.06 | 611 | 9.09 | 231 |
| AFK2410SS | Stainless Steel | 24.00 | 610 | 10.06 | 256 | 9.09 | 231 |
| AFK2412SS | Stainless Steel | 24.00 | 610 | 12.06 | 306 | 9.09 | 231 |


© 2011 Pentair Technical Products

Typical F-Frame Breaker
F-Frame Breaker with Electronic Trip Unit

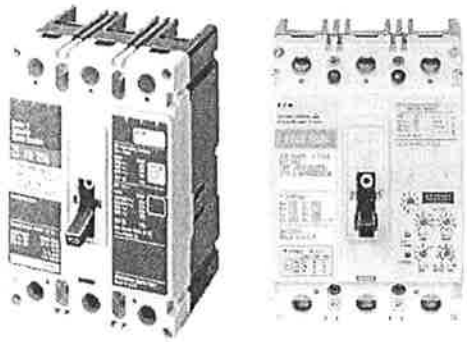

## Contents


| *Description* | *Page* |
|---|---|
| Product Overview | V4-T25-121 |
| Standards and Certifications | V4-T25-122 |
| Quick Reference | V4-T25-123 |
| G-Frame (15–100 Amperes) | V4-T25-127 |
| F-Frame (10–225 Amperes) | |
| Catalog Number Selection | V4-T25-142 |
| Product Selection | V4-T25-143 |
| Accessories | V4-T25-154 |
| Technical Data and Specifications | V4-T25-155 |
| Dimensions and Weights | V4-T25-157 |
| J-Frame (70–250 Amperes) | V4-T25-158 |
| K-Frame (70–400 Amperes) | V4-T25-166 |
| L-Frame (125–600 Amperes) | V4-T25-193 |
| M-Frame (300–800 Amperes) | V4-T25-219 |
| N-Frame (400–1200 Amperes) | V4-T25-230 |
| R-Frame (800–2500 Amperes) | V4-T25-258 |
| Motor Circuit Protectors (MCP) | V4-T25-282 |
| Motor Protection Circuit Breakers (MPCB) | V4-T25-289 |
| Type ELC Current Limiter Attachment (Size 0–4) | V4-T25-291 |
| Internal Accessories | V4-T25-296 |
| External Accessories | V4-T25-327 |


## F-Frame (10–225 Amperes)

### Product Description

- All Eaton's F-Frame circuit breakers are HACR rated
- All circuit breakers 10 through 30 amperes are suitable for HID (high intensity discharge) use
- All F-Frame circuit breakers are suitable for reverse feed use

## Type FD Thermal-Magnetic Circuit Breakers with Non-Interchangeable Trip Units (Includes Terminals on Load End Only)

| | 277 Vac Maximum, 125 Vdc<br>35 kAIC at 277 Vac | 600 Vac Maximum, 250 Vdc<br>35 kAIC at 480 Vac | | |
|---|---|---|---|---|
| | Single-Pole | Two-Pole | Three-Pole | Four-Pole |
| Maximum Continuous Ampere Rating at 40°C | Catalog Number | Catalog Number | Catalog Number | Catalog Number |
| 10 ① | FD1010 | — | — | — |
| 15 | FD1015 ② | FD2015 | FD3015 | FD4015 |
| 20 | FD1020 ② | FD2020 | FD3020 | FD4020 |
| 25 | FD1025 | FD2025 | FD3025 | FD4025 |
| 30 | FD1030 | FD2030 | FD3030 | FD4030 |
| 35 | FD1035 | FD2035 | FD3035 | FD4035 |
| 40 | FD1040 | FD2040 | FD3040 | FD4040 |
| 45 | FD1045 | FD2045 | FD3045 | FD4045 |
| 50 | FD1050 | FD2050 | FD3050 | FD4050 |
| 60 | FD1060 | FD2060 | FD3060 | FD4060 |
| 70 | FD1070 | FD2070 | FD3070 | FD4070 |
| 80 | FD1080 | FD2080 | FD3080 | FD4080 |
| 90 | FD1090 | FD2090 | FD3090 | FD4090 |
| 100 | FD1100 | FD2100 | FD3100 | FD4100 |
| 110 | FD1110 | FD2110 | FD3110 | FD4110 |
| 125 | FD1125 | FD2125 | FD3125 | FD4125 |
| 150 | FD1150 | FD2150 | FD3150 | FD4150 |
| 175 | — | FD2175 | FD3175 | FD4175 |
| 200 | — | FD2200 | FD3200 | FD4200 |
| 225 | — | FD2225 | FD3225 | FD4225 |

*Notes*

① Not UL listed. 5 kAIC interrupting rating.

② UL listed for SWD applications, see NEC Article 240-83(d).

SVX9000 Open Drives

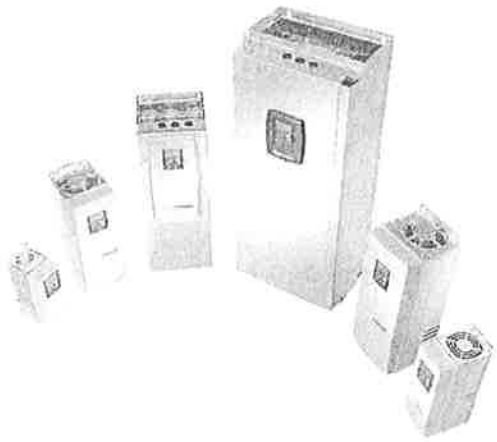

## Contents


| *Description* | *Page* |
|---|---|
| SVX9000 Open Drives | |
| Standards and Certifications | **V6-T36-18** |
| Catalog Number Selection | **V6-T36-18** |
| Product Selection | **V6-T36-19** |
| Accessories | **V6-T36-23** |
| Options | **V6-T36-24** |
| Replacement Parts | **V6-T36-27** |
| Technical Data and Specifications | **V6-T36-34** |
| Dimensions | **V6-T36-35** |
| SVX9000 Enclosed Drives | **V6-T36-52** |
| SVX9000 VFD Pump Panels | **V6-T36-78** |


## SVX9000 Open Drives

### Product Description

SVX9000 Series Adjustable Frequency Drives from Eaton's electrical sector are the next generation of drives specifically engineered for today's commercial and industrial applications. The power unit makes use of the most sophisticated semiconductor technology and a highly modular construction that can be flexibly adapted to the customer's needs.

The input and output configuration (I/O) is designed with modularity in mind. The I/O is compromised of option cards, each with its own input and output configuration. The control module is designed to accept a total of five of these cards. The cards contain not only normal analog and digital inputs but also fieldbus cards.

These drives continue the tradition of robust performance, and raise the bar on features and functionality, ensuring the best solution at the right price.

### Features

- Robust design—proven 500,000 hours MTBF
- Integrated 3% line reactors standard on drives from FR4 through FR9
- EMI/RFI Filters H standard up to 200 hp $I_H$ 480V, 100 hp $I_H$ 230V
- Simplified operating menu allows for typical programming changes, while programming mode provides control of everything
- Quick Start Wizard built into the programming of the drive ensures a smooth start-up
- Keypad can display up to three monitored parameters simultaneously
- LOCAL/REMOTE operation from keypad
- Copy/paste function allows transfer of parameter settings from one drive to the next
- Standard NEMA Type 12/IP54 keypad on all drives
- The SVX can be flexibly adapted to a variety of needs using our pre-installed "Seven in One" precision application programs consisting of:
  - Basic
  - Standard
  - Local/remote
  - Multi step speed control
  - PID control
  - Multi-purpose control
  - Pump and fan control with auto change
- Additional I/O and communication cards provide plug and play functionality
- I/O connections with simple quick connection terminals
- Hand-held auxiliary 24V power supply allows programming/monitoring of control module without applying full power to the drive
- Control logic can be powered from an external auxiliary control panel, internal drive functions and fieldbus if necessary
- Brake chopper standard from: 1–30 hp/380–500V 3/4–15 hp/208–230V
- NEMA Type 1/IP21 and NEMA Type 12/IP54 enclosures available, Frame Sizes FR4–FR9
- Open chassis FR10 and greater
- Standard option board configuration includes an A9 I/O board and an A2 relay output board installed in slots A and B

### *480V SVX9000 Drives*

**SVX9000 Open Drives**

## 380–500V, NEMA Type 1/IP21 Drives

| Frame Size | Delivery Code | hp ($I_H$) | Current ($I_H$) | hp ($I_L$) | Current ($I_L$) | Catalog Number |
|---|---|---|---|---|---|---|
| FR4 | W | 1 | 2.2 | 1-1/2 | 3.3 | SVX001A1-4A1B1 |
| | | 1-1/2 | 3.3 | 2 | 4.3 | SVXF15A1-4A1B1 |
| | | 2 | 4.3 | 3 | 5.6 | SVX002A1-4A1B1 |
| | | 3 | 5.6 | 5 | 7.6 | SVX003A1-4A1B1 |
| | | 5 | 7.6 | — | 9 | SVX005A1-4A1B1 |
| | | — | 9 | 7-1/2 | 12 | SVX006A1-4A1B1 |
| FR5 | W | 7-1/2 | 12 | 10 | 16 | SVX007A1-4A1B1 |
| | | 10 | 16 | 15 | 23 | SVX010A1-4A1B1 |
| | | 15 | 23 | 20 | 31 | SVX015A1-4A1B1 |
| FR6 | W | 20 | 31 | 25 | 38 | SVX020A1-4A1B1 |
| | | 25 | 38 | 30 | 46 | SVX025A1-4A1B1 |
| | | 30 | 46 | 40 | 61 | SVX030A1-4A1B1 |
| FR7 | W | 40 | 61 | 50 | 72 | SVX040A1-4A1N1 |
| | | 50 | 72 | 60 | 87 | SVX050A1-4A1N1 |
| | | 60 | 87 | 75 | 105 | SVX060A1-4A1N1 |
| FR8 | W | 75 | 105 | 100 | 140 | SVX075A1-4A1N1 |
| | | 100 | 140 | 125 | 170 | SVX100A1-4A1N1 |
| | | 125 | 170 | 150 | 205 | SVX125A1-4A1N1 |
| FR9 | W | 150 | 205 | 200 | 261 | SVX150A1-4A1N1 |
| | | 200 | 245 | 250 | 300 | SVX200A1-4A1N1 |

## 380–500V, NEMA Type 12/IP54 Drives

| Frame Size | Delivery Code | hp ($I_H$) | Current ($I_H$) | hp ($I_L$) | Current ($I_L$) | Catalog Number |
|---|---|---|---|---|---|---|
| FR4 | F1 | 1 | 2.2 | 1-1/2 | 3.3 | SVX001A2-4A1B1 |
| | | 1-1/2 | 3.3 | 2 | 4.3 | SVXF15A2-4A1B1 |
| | | 2 | 4.3 | 3 | 5.6 | SVX002A2-4A1B1 |
| | | 3 | 5.6 | 5 | 7.6 | SVX003A2-4A1B1 |
| | | 5 | 7.6 | — | 9 | SVX005A2-4A1B1 |
| | | — | 9 | 7-1/2 | 12 | SVX006A2-4A1B1 |
| FR5 | F1 | 7-1/2 | 12 | 10 | 16 | SVX007A2-4A1B1 |
| | | 10 | 16 | 15 | 23 | SVX010A2-4A1B1 |
| | | 15 | 23 | 20 | 31 | SVX015A2-4A1B1 |
| FR6 | F1 | 20 | 31 | 25 | 38 | SVX020A2-4A1B1 |
| | | 25 | 38 | 30 | 46 | SVX025A2-4A1B1 |
| | | 30 | 46 | 40 | 61 | SVX030A2-4A1B1 |
| FR7 | W | 40 | 61 | 50 | 72 | SVX040A2-4A1N1 |
| | | 50 | 72 | 60 | 87 | SVX050A2-4A1N1 |
| | | 60 | 87 | 75 | 105 | SVX060A2-4A1N1 |
| FR8 | W | 75 | 105 | 100 | 140 | SVX075A2-4A1N1 |
| | | 100 | 140 | 125 | 170 | SVX100A2-4A1N1 |
| | | 125 | 170 | 150 | 205 | SVX125A2-4A1N1 |
| FR9 | W | 150 | 205 | 200 | 261 | SVX150A2-4A1N1 |
| | | 200 | 245 | 250 | 300 | SVX200A2-4A1N1 |

## Motor Circuit Protectors

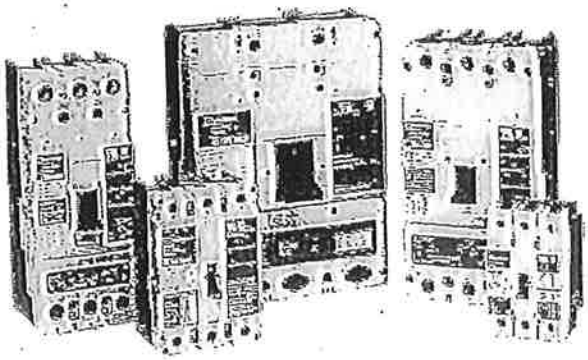

*Motor Circuit Protectors*

## Product Description

Designated as Eaton's Cutler-Hammer Types GMCP and HMCP, the instantaneous-only Motor Circuit Protector (MCP) is available in ratings from 3 A to 1200 A for motor starter sizes 0 through 8. The MCP is designed to comply with the applicable requirements of Underwriters Laboratories Standard UL 489, Canadian Standards Association Standard C22.2 No. 5.1, and International Electrotechnical Commission Recommendations IEC 157-1.

An innovative design of internal components allows higher MCP-starter combination interrupting ratings. The MCP is marked to permit proper electrical application within the assigned equipment ratings.

The MCP is a recognized component (UL File E7819) and complies with the applicable requirements of Underwriters Laboratories Standard UL 489. It is also designed to comply with the applicable requirements of Canadian Standards Association Standard C22.2 No. 5.1, International Electrotechnical Commission Recommendations IEC 157-1, and nameplates bear the CE marking.

Note: Interrupting ratings are dependent on starter it is used with.

# Product Selection

## G-Frame

Table 45-471. 480 Vac Maximum, 600Y/347 Vac

| NEMA Starter Size | Cont. Amps | Cam Setting | Motor Full Load Current Amperes (FLA) ① | MCP Trip Setting | MCP Catalog Number | Price U.S. $ |
|---|---|---|---|---|---|---|
| 0 | 3 | A | 1.1 – 1.2 | 15 | GMCP003A0C | |
| | | B | 1.3 – 1.5 | 18 | | |
| | | C | 1.6 – 1.7 | 21 | | |
| | | D | 1.8 – 1.9 | 24 | | |
| | | E | 2.0 – 2.2 | 27 | | |
| | | F | 2.3 – 2.5 | 30 | | |
| 0 | 7 | A | 2.6 – 3.1 | 35 | GMCP007C0C | |
| | | B | 3.2 – 3.6 | 42 | | |
| | | C | 3.7 – 3.9 | 49 | | |
| | | D | 4.3 – 4.7 | 56 | | |
| | | E | 4.8 – 5.2 | 63 | | |
| | | F | 5.3 – 5.7 | 70 | | |
| 0 | 15 | A | 5.7 – 6.8 | 75 | GMCP015E0C | |
| | | B | 6.9 – 7.9 | 90 | | |
| | | C | 8.0 – 9.1 | 105 | | |
| | | D | 9.2 – 10.3 | 120 | | |
| | | E | 10.4 – 11.4 | 135 | | |
| | | F | 11.5 – 12.6 | 150 | | |
| 1 | 30 | A | 11.5 – 13.7 | 150 | GMCP030H1C | |
| | | B | 13.8 – 16.0 | 180 | | |
| | | C | 16.1 – 18.3 | 210 | | |
| | | D | 18.4 – 20.6 | 240 | | |
| | | E | 20.7 – 22.9 | 270 | | |
| | | F | 23.0 – 25.2 | 300 | | |
| 2 | 50 | A | 19.3 – 22.9 | 250 | GMCP050K2C | |
| | | B | 23.0 – 26.8 | 300 | | |
| | | C | 26.9 – 30.6 | 350 | | |
| | | D | 30.7 – 34.5 | 400 | | |
| | | E | 34.6 – 38.3 | 450 | | |
| | | F | 38.4 – 42.1 | 500 | | |
| 3 | 60 | A | 23.1 – 27.5 | 300 | GMCP060J2C | |
| | | B | 27.7 – 32.2 | 360 | | |
| | | C | 32.3 – 36.7 | 420 | | |
| | | D | 36.9 – 41.4 | 480 | | |
| | | E | 41.5 – 46.0 | 540 | | |
| | | F | 46.2 – 50.5 | 600 | | |
| 3 | 63 | A | 24.2 – 32.1 | 320 | GMCP063M2C | |
| | | B | 29.1 – 34.8 | 380 | | |
| | | C | 33.9 – 39.4 | 440 | | |
| | | D | 38.8 – 46.4 | 500 | | |
| | | E | 43.6 – 48.9 | 570 | | |
| | | F | 48.5 – 53.7 | 630 | | |

① Motor FLA ranges are typical. The corresponding trip setting is at 13 x the minimum FLA value shown. Where a 13 x setting is required for an intermediate FLA value, alternate Cam settings and/or MCP ratings should be used.

Note: All GMCP 3 – 63 A come with line and load steel body terminals for Cu only wire. Refer to Table 45-120 on Page 45-70 under Optional Terminal Types.

Note: UL recognized and CSA approved.



Discount Symbol ..... CB-2

## Cable-In/Cable-Out, 1/2 Wide Types QCR, QCF, QCRH, QCFH

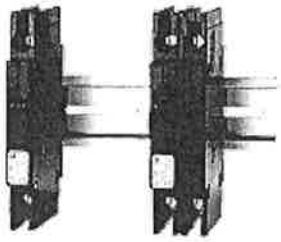

*1-Pole* *2-Pole*

*QCR (Rear-Mounted Breakers)*

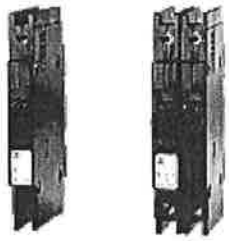

*1-Pole* *2-Pole*

*QCF (Front-Mounted Breakers)*

### Product Description

Type QCR have as a standard feature provisions for 35 mm DIN rail rear mounting with a spring-loaded release. Optional clips for individual mounting are available as a separate accessory.

Type QCF have two threaded steel inserts to facilitate front mounting with #6 – 32 steel screws. The clamp type terminals are accessible from the rear of the breaker so that cables can be accessed without removal of the breaker from the front cover.

### Application Description

QCR and QCF circuit breakers are only 1/2-inch (12.7 mm) wide per pole and are excellent for general purpose industrial applications where space savings is required.

### Features, Benefits and Functions

- 1/2-inch (12.7 mm) wide per pole
- Cable-in/cable-out
- Black cases with black handles
- Three position handle: ON, Tripped (center), OFF
- Thermal-magnetic protection
- One-, two- and three-pole
- 10 kAIC at 120/240V AC, 10 – 60 amperes
- 22 kAIC at 120/240V AC, 15 – 20 amperes
- 10 kAIC at 240V AC, 10 – 30 amperes
- 3 kAIC at 62.5V DC (1-pole)
- 3 kAIC at 130V DC (2 poles in series)
- Normal operating environment:
  - 0 – 40°C
  - 5 – 95% humidity (non-condensating)

### Standards and Certifications

- Built and Listed to UL 489
- UL File E7819
- CSA File LR48907
- Type QCR and QCF circuit breakers are UL listed circuit breakers that are suitable for use as branch circuit protectors
- All ratings 15 – 60A are HACR rated

### Instruction Leaflets

- Instructions for QCRLOFF Padlock Bracket for Types QCR and QCF Breakers: FRED 6621023

Time/Current Curves

- 1-Pole: FRED 350077
- 2-Pole: FRED 350177
- 3-Pole: FRED 350277

Dimension Sheets

- FRED Index 206

### Options and Accessories

QCR and QCF Standard Box Terminals

Factory installed line and load side breaker terminal to accommodate 14 AWG to 4 AWG wire.

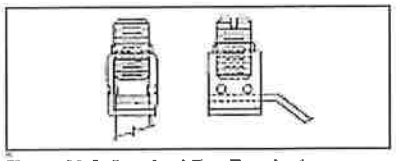

Figure 11-3. Standard Box Terminals

QCR Quick-Connect Terminals

Factory installed two-prong quick-connect terminal on breaker load side suitable for terminating two 10 AWG wire with insulated slip-on terminals as shown. Line side terminal is the standard type.

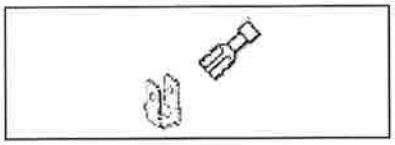

Figure 11-4. Catalog Suffix "P"

QCR and QCF Ring or Spade Lug Terminals (10 to 30 ampere ratings only)

Factory installed line and load side terminals each equipped with a #10 – 32 screw suitable for terminating one 10 AWG wire with insulated ring or spade type terminal as shown.

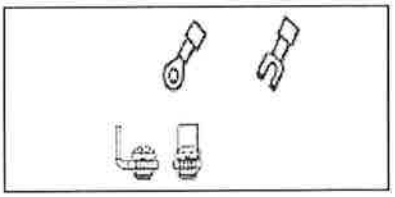

Figure 11-5. Catalog Suffix "T"

Table 11-12. Available QCR and QCF Breaker Accessories

| Description | Catalog Number | Price U.S. $ |
|---|---|---|
| Steel mounting clip mounts QCR breaker if individual mounting is required. Quantity two required for 1- and 2-pole and four required for 3-pole breakers. | QCRMTGFT | .62 |
| Removable padlock device for single-pole QCR or QCF breaker. | QCRFPL1P | 19.80 |
| Removable padlock device for multi-pole QCR or QCF breaker. | QCRFPLMP | 19.00 |
| Padlock bracket assembly for QCR or QCF single- or multi-pole breakers (OFF only). | QCRFLOFF | 24.50 |

## Product Selection

Table 11-13. QCR Breaker Catalog Numbers ①②③④

| Continuous Ampere Rating @ 40°C | 120/240V AC | | 120/240V AC | | 240V AC⑧ | | | |
|---|---|---|---|---|---|---|---|---|
| | 1-Pole | | 2-Pole | | 2-Pole | | 3-Pole | |
| | Catalog Number | Price U.S. $ | Catalog Number | Price U.S. $ | Catalog Number | Price U.S. $ | Catalog Number | Price U.S. $ |
| **QCR Breaker 10 kAIC Interruption Ratings** | | | | | | | | |
| 10 | QCR1010<br>QCR1010T<br>— | 27.50<br>33.50<br>— | QCR2010<br>QCR2010T<br>QCR2010P | 60.50<br>74.50<br>73.50 | —<br>—<br>— | —<br>—<br>— | —<br>—<br>— | —<br>—<br>— |
| 15 | QCR1015⑨<br>QCR1015T⑨<br>— | 27.50<br>33.50<br>— | QCR2015<br>QCR2015T<br>QCR2015P | 60.50<br>74.50<br>73.50 | QCR2015H<br>QCR2015HT<br>— | 156.00<br>180.00<br>— | QCR3015H<br>QCR3015HT<br>— | 194.00<br>224.00<br>— |
| 20 | QCR1020⑨<br>QCR1020T⑨<br>— | 27.50<br>33.50<br>— | QCR2020<br>QCR2020T<br>QCR2020P | 60.50<br>74.50<br>73.50 | QCR2020H<br>QCR2020HT<br>— | 156.00<br>180.00<br>— | QCR3020H<br>QCR3020HT<br>— | 194.00<br>224.00<br>— |
| 25 | QCR1025<br>QCR1025T<br>— | 27.50<br>33.50<br>— | QCR2025<br>QCR2025T<br>QCR2025P | 60.50<br>74.50<br>73.50 | QCR2025H<br>QCR2025HT<br>— | 156.00<br>180.00<br>— | QCR3025H<br>QCR3025HT<br>— | 184.00<br>225.00<br>— |
| 30 | QCR1030<br>QCR1030T<br>— | 27.50<br>33.50<br>— | QCR2030<br>QCR2030T<br>QCR2030P | 60.50<br>74.50<br>73.50 | QCR2030H<br>QCR2030HT<br>— | 156.00<br>180.00<br>— | QCR3030H<br>QCR3030HT<br>— | 194.00<br>224.00<br>— |
| 35 | QCR1035<br>— | 27.50<br>— | QCR2035<br>QCR2035P | 60.50<br>73.50 | —<br>— | —<br>— | —<br>— | —<br>— |
| 40 | QCR1040<br>— | 27.50<br>— | QCR2040<br>QCR2040P | 60.50<br>73.50 | —<br>— | —<br>— | —<br>— | —<br>— |
| 45 | QCR1045<br>— | 27.50<br>— | QCR2045<br>QCR2045P | 60.50<br>73.50 | —<br>— | —<br>— | —<br>— | —<br>— |
| 50 | QCR1050<br>— | 27.50<br>— | QCR2050<br>QCR2050P | 60.50<br>73.50 | —<br>— | —<br>— | —<br>— | —<br>— |
| 55 | QCR1055<br>— | 27.50<br>— | QCR2055<br>QCR2055P | 60.50<br>73.50 | —<br>— | —<br>— | —<br>— | —<br>— |
| 60⑦ | QCR1060<br>— | 27.50<br>— | QCR2060<br>QCR2060P | 60.50<br>73.50 | —<br>— | —<br>— | —<br>— | —<br>— |
| **QCR Breaker 22 kAIC Interruption Ratings** | | | | | | | | |
| 15 | QCRH1015⑨<br>QCRH1015T⑨ | 60.00<br>60.00 | QCRH2015<br>QCRH2015T | 128.00<br>128.00 | —<br>— | —<br>— | —<br>— | —<br>— |
| 20 | QCRH1020⑨<br>QCRH1020T⑨ | 60.00<br>60.00 | QCRH2020<br>QCRH2020T | 128.00<br>128.00 | —<br>— | —<br>— | —<br>— | —<br>— |

① Standard breaker terminals are box type lugs.
② Breakers with T Catalog Number Suffix are suitable for line and load side ring terminal connection (#10-32 plus/minus terminal screw provided).
③ Breakers with P Catalog Number Suffix are suitable for terminating two 10 AWG Quick-Connect Type Terminals per phase on breaker load side.
④ Breakers with Shunt Trip Attachment (extra pole required on breaker right-hand side) are available. Contact the Customer Support Center.
⑥ Breakers with H Catalog Suffix have 240V AC construction.
⑨ All 15 and 20 ampere single-pole breakers are SWD (Switching Duty) rated for fluorescent lighting applications.
⑦ 60/75°C Cu/Al wire on all ratings except 60 amperes which requires Cu only conductor.

# CUTLER-HAMMER (E34VHBK1-Y1 & E34VTBK1-23X) 30.5MM SELECTOR SWITCHES HEAVY-DUTY WATERTIGHT/OILTIGHT

## Selector Switch Units

- Two-, Three- and Four-Position — Maintained
- Non-illuminated and Illuminated

*2-Position Maintained Switch*

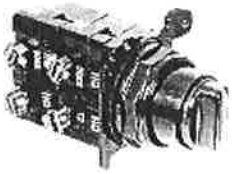

*4-Position Maintained Switch*

**Table 47-315. 2-Position Selector Switch — UL (NEMA) 3, 3R, 4, 4X, 12, 13**

| Operator Position ① | | Operator Action ② | Non-illuminated | | Price U.S. $ | Illuminated — 120V Transformer | | Price U.S. $ | Contact Type | Mounting Location | | Cam Code |
|---|---|---|---|---|---|---|---|---|---|---|---|---|
| | | | Black Knob ③ | Black Lever ③ | | Red Knob ③ | Red Lever ③ | | | | | |
| | | | Catalog Number | Catalog Number | | Catalog Number | Catalog Number | | | A | B | |
| X<br>O | O<br>X | M M | E34VFBK1-X1 | E34VFBL1-X1 | 45.25 | E34VFB120ER-1X | E34VFB120FR-1X | 99.35 | 1NC<br>1NO | | | 1 |

① X = closed circuit, O = open circuit.
② M = Maintained.
③ To order different type or color selector switch, substitute the underlined character with appropriate Suffix Code from the Color Selection table. Example: E34VFBK2-X1.

**Table 47-316. 3-Position Selector Switch — UL (NEMA) 3, 3R, 4, 4X, 12, 13**

| Operator Position ④ | | | Operator Action ⑤ | Non-illuminated | | Price U.S. $ | Illuminated — 120V Transformer | | Price U.S. $ | Contact Type | Mounting Location | | Cam Code |
|---|---|---|---|---|---|---|---|---|---|---|---|---|---|
| | | | | Black Knob ⑥ | Black Lever ⑥ | | Red Knob ⑥ | Red Lever ⑥ | | | | | |
| | | | | Catalog Number | Catalog Number | | Catalog Number | Catalog Number | | | A | B | |
| X<br>O | O<br>O | O<br>X | | E34VHBK1-Y1 | E34VHBL1-Y1 | 45.25 | E34VHB120TER-2X | E34VHB120TFR-2X | 99.35 | 1NO<br>1NO | | | 3 |
| X<br>O<br>O | O<br>X<br>O | O<br>O<br>X | M<br>M M | E34VHBK1-Y2 | E34VHBL1-Y2 | 79.00 | E34VHB120TER-23X | E34VHB120TFR-23X | 119.45 | 1NO<br>2NC (Series)<br>1NO | | | 3 |

④ X = closed circuit, O = open circuit.
⑤ M = Maintained.
⑥ To order different type or color selector switch, substitute the underlined character with appropriate Suffix Code from the Color Selection table. Example: E34VFBK2-X1.

**Table 47-317. 4-Position Selector Switch — UL (NEMA) 3, 3R, 4, 4X, 12, 13**

| Operator Position ⑦ | | | | Operator Action ⑧ | Non-illuminated | | Price U.S. $ | Illuminated — 120V Transformer | | Price U.S. $ | Contact Type | Mounting Location | | Cam Code |
|---|---|---|---|---|---|---|---|---|---|---|---|---|---|---|
| | | | | | Black Knob ⑨ | Black Lever ⑨ | | Red Knob ⑨ | Red Lever ⑨ | | | | | |
| | | | | | Catalog Number | Catalog Number | | Catalog Number | Catalog Number | | | A | B | |
| X<br>O<br>O<br>O | O<br>X<br>O<br>O | O<br>O<br>X<br>O | O<br>O<br>O<br>X | M M<br>M M | E34VTBK1-Z1 | E34VTBL1-Z1 | 79.00 | E34VRB120TER-23X | E34VRB120TFR-23X | 119.45 | 1NC<br>1NO<br>1NO<br>1NC | | | 7 |

⑦ X = closed circuit, O = open circuit.
⑧ M = Maintained.
⑨ To order different type or color selector switch, substitute the underlined character with appropriate Suffix Code from the Color Selection table. Example: E34VFBK2-X1.

**Table 47-318. Color Selection, Non-illuminated**

| Color | Code Letter |
|---|---|
| Black | 1 |
| Red | 2 |
| Green | 3 |
| Yellow | 4 |
| White | 5 |
| Blue | 6 |
| Gray | 7 |
| Orange | 8 |

**Note:** For Light Unit Voltage Suffix and Knobs, Levers tables, see **Page 47-192.**

**Note:** Use NEMA 4X 10250T operators where exposed to ultraviolet light, see **Pages 47-123 – 47-173.**


Accessories ..... **Pages 47-197 – 47-198**
Additional Circuit Arrangements ..... **Pages 47-189 – 47-190**
Dimensions ..... **Page 47-200**
Enclosures ..... **Pages 47-195 – 47-196**
Legend Plates ..... **Page 47-194**
Discount Symbol ..... **1CD1C**

# CUTLER HAMMER
## (P/N: E22T3X26, E22T2X26 & E22T9X26)

# E22T SERIES – 22.5MM PUSH BUTTON HEAVY DUTY WATERTIGHT/OIL TIGHT

### Indicating Light Units — Modular

- Standard and PresTest Types
- Full Voltage LED Light Units or
- Full Voltage, Resistor or Transformer Incandescent Light Units
- Plastic Lenses

PresTest — This device incorporates a press-to-test feature whereby depressing the lens disconnects the light from the source being monitored and connects the lamp to a continuously energized circuit for immediate test for a faulty lamp.

*24V Full Voltage Indicating Light*

*120V Resistor Indicating Light*

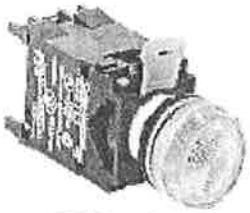

*120V Transformer Indicating Light*

**Table 47-35. Indicating and PresTest Light Units — UL (NEMA) 3, 3R, 4, 4X, 12, 13**

| Lamp | Type | Voltage | Color | Indicating Light | | PresTest | | LED/Lamp Number |
|---|---|---|---|---|---|---|---|---|
| | | | | Catalog Number | Price U.S. $ | Catalog Number | Price U.S. $ | |
| LED | Full Voltage | 24V AC/DC | Red | E22H2X40 | 48.00 | — | — | Bayonet Base |
| | | | Green | E22H3X41 | 48.00 | — | — | |
| | | | White | E22H5X90 | 48.00 | — | — | |
| | | | Blue | E22H6X52 | 48.00 | — | — | |
| | | | Amber | E22H9X95 | 48.00 | — | — | |
| | | | Clear | E22H0X90 | 48.00 | — | — | |
| | | 120V AC | Red | E22H2X43 | 48.00 | — | — | |
| | | | Green | E22H3X44 | 48.00 | — | — | |
| | | | White | E22H5X92 | 48.00 | — | — | |
| | | | Blue | E22H6X61 | 48.00 | — | — | |
| | | | Amber | E22H9X96 | 48.00 | — | — | |
| | | | Clear | E22H0X92 | 48.00 | — | — | |
| Incandescent | Full Voltage | 24V AC/DC | Red | E22H2X4 | 32.00 | E22T2X20 | 57.50 | #1819 |
| | | | Green | E22H3X4 | 32.00 | E22T3X20 | 57.50 | |
| | | | White | E22H5X4 | 32.00 | E22T5X20 | 57.50 | |
| | | | Blue | E22H6X4 | 32.00 | E22T6X20 | 57.50 | |
| | | | Amber | E22H9X4 | 32.00 | E22T9X20 | 57.50 | |
| | | | Clear | E22H0X4 | 32.00 | E22T0X20 | 57.50 | |
| | Resistor | 120V AC/DC | Red | E22H2X10 | 32.00 | E22T2X26 | 57.50 | W1226 |
| | | | Green | E22H3X10 | 32.00 | E22T3X26 | 57.50 | |
| | | | White | E22H5X10 | 32.00 | E22T5X26 | 57.50 | |
| | | | Blue | E22H6X10 | 32.00 | E22T6X26 | 57.50 | |
| | | | Amber | E22H9X10 | 32.00 | E22T9X26 | 57.50 | |
| | | | Clear | E22H0X10 | 32.00 | E22T0X26 | 57.50 | |
| | Transformer | 120V AC | Red | E22H2X11 | 48.00 | E22T2X27 | 73.00 | #755 |
| | | | Green | E22H3X11 | 48.00 | E22T3X27 | 73.00 | |
| | | | White | E22H5X11 | 48.00 | E22T5X27 | 73.00 | |
| | | | Blue | E22H6X11 | 48.00 | E22T6X27 | 73.00 | |
| | | | Amber | E22H9X11 | 48.00 | E22T9X27 | 73.00 | |
| | | | Clear | E22H0X11 | 48.00 | E22T0X27 | 73.00 | |

Note: Dimensions are listed with components.

## Handle Mechanisms Overview

Handle Mechanisms are used to operate molded case circuit breakers, molded case switches and motor circuit protectors. They are available in three basic configurations — Flange Mounted, Through-the-Door and Direct (Close-Coupled) — providing safe, dependable operation and ease of installation.

- Flange Mounted:
  - Flex Shaft
  - C371
- Through-the-Door:
  - Series C Rotary
  - Universal Rotary
- Direct (Close-Coupled):
  - Universal Direct
  - Euro IEC
  - G Direct

Handle mechanisms are typically used on enclosed circuit breakers, control panels and motor control centers in many different applications. Eaton's Cutler-Hammer has a handle mechanism for virtually any need.

## Flange Mounted Handle Mechanisms

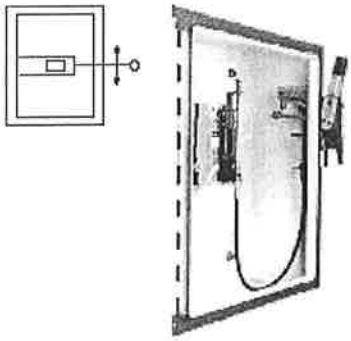

*Flex Shaft™*

## Product Description

Flange Mounted Handle Mechanisms mount on the flange of an enclosure door. The Flex Shaft™ is an extra heavy-duty mechanism that includes a flexible shaft in various lengths, 3 feet (.9 m) through 10 feet (3 m) for use with various size enclosures.

The Flex Shaft Handle will accept up to three padlock shackles, each with a maximum diameter of 3/8-inch (9.5 mm). Can be used with NEMA 1, 3R and 12 fabricated enclosures. An optional handle is available for Flex Shaft that is suitable for use with NEMA 4 and 4X environments. Flex Shaft comes preset from the factory, requiring only minor field adjustments on installation, which takes about 10 minutes — a significant time savings compared to installation of other types of flange handle mechanisms. The Flex Shaft mechanism also takes up less interior enclosure space than competitive designs and the handle fits standard flange cutouts. Flex Shaft Handle can be remotely mounted from breaker, where an operator can use it by "funneling" the cable through conduit.

Flex Shaft is UL listed under File E64983 and meets CSA requirements.

The Type C371 Circuit Breaker Operating Mechanisms are designed for installation in control enclosures where main or branch circuit protective devices are required. All circuit breaker mechanisms are suitable for right-hand mounting.

Auxiliary contacts are not available for mounting on operating mechanisms. Where required, have them installed in circuit breaker.

Type C371 is UL listed under File E62635.

**Table 12-494. Flex Shaft Ordering Information (3-Pole Only)**

| Breaker Frame | Flexible Shaft Length in Feet (m) | | | | | | | |
|---|---|---|---|---|---|---|---|---|
| | 3 (.9) | | 4 (1.2) | | 5 (1.5) | | 6 (1.8) | |
| | Catalog Number | Price U.S. $ | Catalog Number | Price U.S. $ | Catalog Number | Price U.S. $ | Catalog Number | Price U.S. $ |
| E125 | EHMFS03 | 399. | EHMFS04 | 406. | EHMFS05 | 415. | EHMFS06 | 420. |
| J250 | JHMFS03 | 465. | JHMFS04 | 475. | JHMFS05 | 485. | JHMFS06 | 495. |
| G | F0S03C | 399. | F0S04C | 406. | F0S05C | 415. | F0S06C | 420. |
| F | F1S03C | 399. | F1S04C | 406. | F1S05C | 415. | F1S06C | 420. |
| F (Dual) | F1S03CD | 499. | F1S04CD | 510. | F1S05CD | 520. | F1S06CD | 525. |
| J | F2S03C | 465. | F2S04C | 473. | F2S05C | 482. | F2S06C | 487. |
| K | F3S03C | 505. | F3S04C | 515. | F3S05C | 520. | F3S06C | 530. |
| L and MDL | N/A | — | F4S04C | 610. | F4S05C | 620. | F4S06C | 630. |
| N | N/A | — | F5S04C | 645. | F5S05C | 655. | F5S06C | 665. |
| R | N/A | — | F6S04 | 725. | F6S05 | 740. | F6S06 | 755. |
| MD | N/A | — | F7S04C | 610. | F7S05C | 620. | F7S06C | 630. |

*Flush Button — Green*
*Catalog Number E34PB3-53X*

*Extended Button — Red*
*Catalog Number E34EB2-53X*

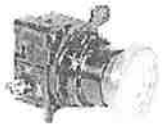

*Mushroom Button — Red*
*Catalog Number E34LB2-53X*

*Jumbo Mushroom — Red*
*Catalog Number E34JB2-1X*

## Product Selection — Assembled Devices

### Momentary Pushbutton Units

■ Non-illuminated

Table 47-305. Pushbutton Units — UL (NEMA) 3, 3R, 4, 4X, 12, 13

| Contact Type | Button Color | Flush Button | | Extended Button | | Mushroom Button | | Jumbo Mushroom ① | |
|---|---|---|---|---|---|---|---|---|---|
| | | Catalog Number | Price U.S. $ | Catalog Number | Price U.S. $ | Catalog Number | Price U.S. $ | Catalog Number | Price U.S. $ |
| 1NO | Black | E34PB1-53X | 28.25 | E34EB1-53X | 28.25 | E34LB1-53X | 48.25 | E34JB1-53X | 55.50 |
| | Red | E34PB2-53X | 28.25 | E34EB2-53X | 28.25 | E34LB2-53X | 48.25 | E34JB2-53X | 55.50 |
| | Green | E34PB3-53X | 28.25 | E34EB3-53X | 28.25 | E34LB3-53X | 48.25 | E34JB3-53X | 55.50 |
| | Red — Engraved EMERG. STOP | — | — | — | — | — | — | E34JB2N8-53X | 61.00 |
| 1NC | Black | E34PB1-51X | 28.25 | E34EB1-51X | 28.25 | E34LB1-51X | 48.25 | E34JB1-51X | 55.50 |
| | Red | E34PB2-51X | 28.25 | E34EB2-51X | 28.25 | E34LB2-51X | 48.25 | E34JB2-51X | 55.50 |
| | Green | E34PB3-51X | 28.25 | E34EB3-51X | 28.25 | E34LB3-51X | 48.25 | E34JB3-51X | 55.50 |
| | Red — Engraved EMERG. STOP | — | — | — | — | — | — | E34JB2N8-51X | 61.00 |
| 1NO-1NC | Black | E34PB1-1X | 38.50 | E34EB1-1X | 38.50 | E34LB1-1X | 58.50 | E34JB1-1X | 65.50 |
| | Red | E34PB2-1X | 38.50 | E34EB2-1X | 38.50 | E34LB2-1X | 58.50 | E34JB2-1X | 65.50 |
| | Green | E34PB3-1X | 38.50 | E34EB3-1X | 38.50 | E34LB3-1X | 58.50 | E34JB3-1X | 65.50 |
| | Red — Engraved EMERG. STOP | — | — | — | — | — | — | E34JB2N8-1X | 70.50 |

① Anodized aluminum head — may not be suitable for some corrosive environments.

### Indicating Light Units

■ Plastic Lenses

*24V Full Voltage*
*Indicating Light — Red*
*Catalog Number*
*E34FB24H2X*

Table 47-306. Indicating Light Units — UL (NEMA) 3, 3R, 3S, 4, 4X, 12, 13

| Lamp | Type | Voltage | Color | Indicating Light ② | | LED/Lamp Number |
|---|---|---|---|---|---|---|
| | | | | Catalog Number | Price U.S. $ | |
| LED | Full Voltage | 24V AC/DC | Red | E34FB197LRP24 | 69.50 | Bayonet Base |
| | | | Green | E34FB197LGP24 | 69.50 | |
| | | | Amber | E34FB197LAP24 | 69.50 | |
| | | 120V AC | Red | E34FB197LRP2A | 69.50 | |
| | | | Green | E34FB197LGP2A | 69.50 | |
| | | | Amber | E34FB197LAP2A | 69.50 | |
| Incandescent | Full Voltage | 24V AC/DC | Red | E34FB24H2X | 58.50 | #757 |
| | | | Green | E34FB24H3X | 58.50 | |
| | | | Amber | E34FB24H9X | 58.50 | |
| | Resistor | 120V AC/DC | Red | E34RB120H2X | 58.50 | 120MB |
| | | | Green | E34RB120H3X | 58.50 | |
| | | | Amber | E34RB120H9X | 58.50 | |
| | Transformer | 120V AC 50/60 Hz | Red | E34TB120H2X | 72.00 | #755 |
| | | | Green | E34TB120H3X | 72.00 | |
| | | | Amber | E34TB120H9X | 72.00 | |

② Anodized aluminum head — may not be suitable for some corrosive environments.

Note: Use NEMA 4X 10250T operators where exposed to ultraviolet light, see Pages 47-123 – 47-173.

Additional Light Units ..... Page 47-186
Dimensions ..... Page 47-200
Enclosures ..... Pages 47-195 – 47-196
Legend Plates ..... Page 47-194
Replacement
Lamps/LEDs ..... Page 47-173
Discount Symbol ..... 1CD1C

*Flush Button — Black*
*Catalog Number E34PB1*

*Extended Button — Red*
*Catalog Number E34EB2*

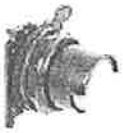

*Half Shrouded Button — Green*
*Catalog Number E34EVB3*

*Mushroom Head Button — Yellow*
*Catalog Number E34LB4*

*Jumbo Mushroom Head Button — Red*
*Catalog Number E34JB2*

# Product Selection — Components

## Pushbuttons

Table 47-319. Momentary Pushbutton Operators, Non-illuminated — UL (NEMA) 3, 3R, 4, 4X, 12, 13

| Color | Flush Button | | Extended Button | | Half Shrouded Button | | |
|---|---|---|---|---|---|---|---|
| | Catalog Number | Price U.S. $ | Catalog Number | Price U.S. $ | Vertical | Horiz. | Price U.S. $ |
| Black | E34PB1 | 18.20 | E34EB1 | 18.20 | E34EVB1 | E34EHB1 | 18.20 |
| Red | E34PB2 | 18.20 | E34EB2 | 18.20 | E34EVB2 | E34EHB2 | 18.20 |
| Green | E34PB3 | 18.20 | E34EB3 | 18.20 | E34EVB3 | E34EHB3 | 18.20 |
| Yellow | E34PB4 | 18.20 | E34EB4 | 18.20 | E34EVB4 | E34EHB4 | 18.20 |
| White | E34PB5 | 18.20 | E34EB5 | 18.20 | E34EVB5 | E34EHB5 | 18.20 |
| Blue | E34PB6 | 18.20 | E34EB6 | 18.20 | E34EVB6 | E34EHB6 | 18.20 |
| Gray | E34PB7 | 18.20 | E34EB7 | 18.20 | E34EVB7 | E34EHB7 | 18.20 |
| Orange | E34PB8 | 18.20 | E34EB8 | 18.20 | E34EVB8 | E34EHB8 | 18.20 |

Table 47-320. Mushroom Head Momentary Pushbutton Operators, Non-illuminated — UL (NEMA) 3, 3R, 4, 4X, 12, 13

| Color | Mushroom Button | | Anodized Aluminum Jumbo Mushroom Button ① | |
|---|---|---|---|---|
| | Catalog Number | Price U.S. $ | Catalog Number | Price U.S. $ |
| Black | E34LB1 | 38.50 | E34JB1 | 45.25 |
| Red | E34LB2 | 38.50 | E34JB2 | 45.25 |
| Red (Engraved EMER. STOP) | — | — | E34JB2N8 | 50.50 |
| Green | E34LB3 | 38.50 | E34JB3 | 45.25 |
| Yellow | E34LB4 | 38.50 | E34JB4 | 45.25 |
| Blue | E34LB6 | 38.50 | — | — |

① Anodized aluminum head — may not be suitable for some corrosive environments.

Note: Use NEMA 4X 10250T operators where exposed to ultraviolet light, see Pages 47-123 – 47-173.

### Contact Blocks

See **Page 47-193** for additional contact blocks, fingerproof shrouds and Transparent Amber colored blocks.

*Contact Block*

Table 47-321. Contact Blocks

| Symbol | Circuit | Catalog Number | Price U.S. $ |
|---|---|---|---|
| Blank No Plunger | NC | 10250T51 | 10.10 |
| Blank No Plunger | NO | 10250T53 | 10.10 |
| | NO-NC | 10250T1 | 20.10 |
| | 2NC | 10250T3 | 20.10 |
| | 2NO | 10250T2 | 20.10 |

*BRSURGE Surge Protector*

**BRSURGE** — For use on single-phase, 120/240V AC systems. This easily plugs into a single-phase Type BR loadcenter and occupies two 1-inch (25.4 mm) pole spaces similar to a 2-pole Type BR breaker. When plugged into the first two stabs at the top of the loadcenter just below the main breaker or main lug, it provides surge protection for the entire loadcenter. If internal components are damaged, the BRSURGE LED visual indicators will signal the need for replacement. This device is suitable for service entry locations installed in accordance with NEC Article 280. The BRSURGE is ideal for protecting sensitive appliances and electronics, such as refrigerators, microwave ovens, and home computers.

*CHSA01 Surge Protector*

**CHSA01** — For use on single-phase, 120/240V AC systems. This surge protector can be easily installed in the enclosure of indoor or outdoor loadcenters by using the 1/2-inch (12.7 mm) threaded nipple. It is ideal for protecting outdoor lighting, garages, sump and irrigation pumps, etc.

*CHSA03 Surge Protector*

**CHSA03** — For use on three-phase, 600V AC systems. This surge protector is installed in the enclosure of indoor and outdoor loadcenters by using the 1/2-inch (12.7 mm) threaded nipple. It provides protection for commercial electrical services especially those using electric motors.

**Table 3-112. Surge Protectors**

| Description | Discharge Voltage, V AC | | | | Lead Length Inches (mm) | Catalog Number | Price U.S. $ |
|---|---|---|---|---|---|---|---|
| | 1.5 kA | 3 kA | 5 kA | 10 kA | | | |
| Surge Protector Plug-On Type BR, Single-Phase, 120/240V AC | 345 | 370 | 500 | 545 | 8 (203.2) | BRSURGE | 108. |
| Surge Protector, 2-Pole Single-Phase, 3-Wire, 120/240V AC | 490 | 640 | 980 | 1410 | 15 (381.0) | CHSA01 | 51. |
| Surge Protector, 3-Pole Three-Phase, 4-Wire, 600V AC | 1700 | 2100 | 2510 | 3800 | 15 (381.0) | CHSA03 | 103. |

# REDINGTON COUNTERS (711-0160)

# MODEL 711 HOUR METER

Model 711 / 731

## Features

These 7 figure, AC or DC hourmeters with running indicators, offer crisp, distinctive styling for many panel applications. Available in square and round bezel, flush mount, or three-hole round panel mount. Each is light-weight, low power, and carry UL, CSA and CE approvals.

## Specifications

| | |
|---|---|
| Figures | 7 figures, .14" high<br>99,999.99 hours |
| Reset | Non-reset |
| Voltages | 24, 115, or 230VAC (+/-10%), 50 or 60Hz., 10-80 VDC |
| Power | 3 watts (AC), 1.2 watt maximum (DC) |
| Mounting | Panel (mounting hardware included) |
| Terminations | 1/4" spade terminals, with removable screws, or 8" wire leads |
| Temp. Range | -22°F to +158°F |
| Approvals | UL Recognized and CSA Certified (AC only),<br>CE Compliant |
| Weight | 2 oz. |
| Options | Din Rail |

| Models | Description |
|---|---|
| 711-0150 | 115VAC/60Hz., 2.28" Dia., Flush mount, screw termination |
| 711-0152 | 230VAC/60Hz., 2.28" Dia., Flush mount, screw termination |
| 711-0160 | 115VAC/60Hz., 2.93" Dia., 3-hole round, screw termination |
| 711-0161 | 115VAC/50Hz., 2.93" Dia., 3-hole round, screw termination |
| 711-0162 | 230VAC/60Hz., 2.93" Dia., 3-hole round, screw termination |
| 711-0163 | 230VAC/50Hz., 2.93" Dia., 3-hole round, screw termination |
| 711-0164 | 24VAC/60Hz., 2.93" Dia., 3-hole round, screw termination |
| 711-0170 | 230VAC/60Hz., 2.93" Dia., 3-hole round, 8" wire leads |
| 711-0171 | 115VAC/60Hz., 2.93" Dia., 3-hole round, 8" wire leads |
| 711-0180 | 115VAC/60Hz., 1.89" Sq., Flush mount, screw termination |
| 711-0182 | 24VAC/60Hz., 1.89" Sq., Flush mount, screw termination |
| 711-0190 | 115VAC/60Hz., 2.05" Sq., Flush mount, screw termination |
| 711-0191 | 230VAC/60Hz., 2.05" Sq., Flush mount, screw termination |
| 711-0192 | 24VAC/60Hz., 2.05" Sq., Flush mount, screw termination |
| 711-0193 | 115VAC/50Hz., 2.05" Sq., Flush mount, screw termination |
| 711-0194 | 230VAC/50Hz., 2.05" Sq., Flush mount, screw termination |
| 711-0195 | 24VAC/50Hz., 2.05" Sq., Flush mount, screw termination |
| 711-0200 | 115VAC/60Hz., 2.20" Sq., Flush mount, screw termination |
| 711-0201 | 115VAC/50Hz., 2.20" Sq., Flush mount, screw termination |
| 731-0046 | 10-80VDC, 2.93" Dia., 3-hole round, screw termination |

## Dimensions

2.28" Dia. FLUSH

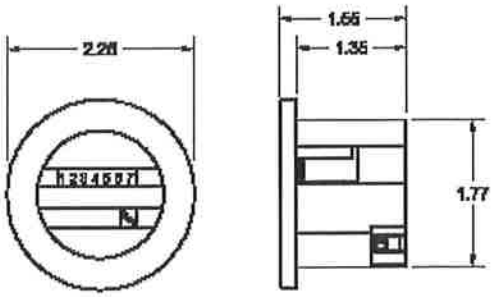


Panel cutout: 1.99" Dia. or 1.81" Sq.

3-HOLE ROUND

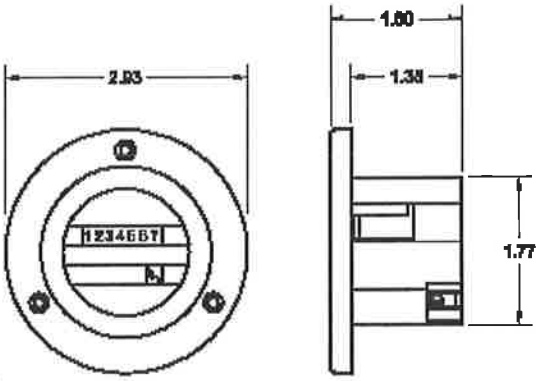


Panel cutout: 1.99" Dia. or 1.81" Sq.
Screws provided: 4-40 x 5/8"
Bolt hole circle: 2.44"

1.89", 2.05", or 2.20" Sq. FLUSH

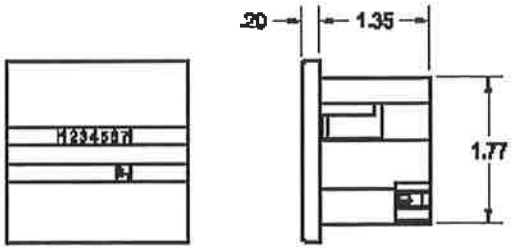


Panel cutout: 1.99" Dia. or 1.81" Sq.

# MICRON (B2K0BTZ13JKH)

# CONTROL CIRCUIT TRANSFORMER

Micron offers a broad line of standard transformers, each made with the finest materials and workmanship. Laminations of the finest silicon steel assure optimum performance and the finest quality copper magnet wire assures efficient operation. Insulation materials are of the highest rating available for the temperature class; mounting brackets of heavy gauge steel add strength and stability; and a detailed but easy-to-read nameplate assures easy identification. All are UL 506 listed (File # E46323) and CSA Certified (File # LR27533) and meet NEMA and ANSI requirements.

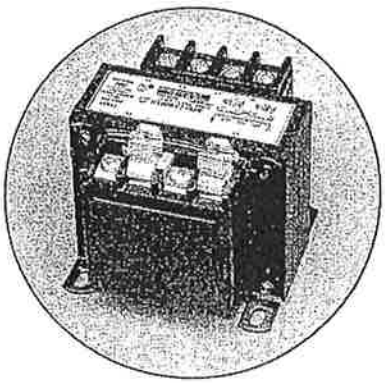

Group A

MICRON

**Primary Volts**

240 x 480, 230 x 460, 220 x 440

**Secondary Volts**

120 • 115 • 110

UL Listed and CSA Certified 50 / 60 Hz

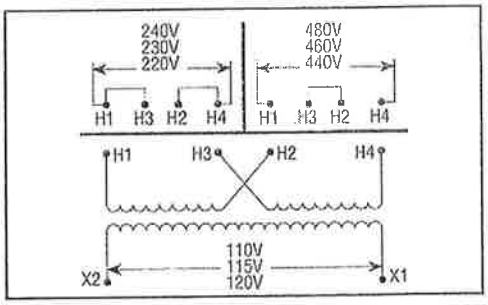


| VA Rating | Catalog Number | Construction Figure | Output Amps | DIMENSIONS (inches) • mm A | B | C | D | E | Mounting Slots | Approx. Wt. (lbs.) • kg |
|---|---|---|---|---|---|---|---|---|---|---|
| 25 | B025BTZ13JK | B | 0.22 | 2 1/2 • 64 | 3 • 76 | 2 9/16 • 65 | 1 1/2 • 38 | 2 1/2 • 64 | 13/64 X 3/8 • 5 X 10 | 1.7 • 0.8 |
| 50 | B050BTZ13JK | B | 0.43 | 3 • 76 | 3 • 76 | 2 9/16 • 65 | 2 • 51 | 2 1/2 • 64 | 13/64 X 3/8 • 5 X 10 | 2.6 • 1.2 |
| 75 | B075BTZ13JK | B | 0.65 | 3 1/2 • 89 | 3 • 76 | 2 9/16 • 65 | 2 1/2 • 64 | 2 1/2 • 64 | 13/64 X 3/8 • 5 X 10 | 3.5 • 1.6 |
| 100 | B100BTZ13JK | B | 0.87 | 3 3/8 • 86 | 3 3/8 • 86 | 2 7/8 • 73 | 2 3/8 • 60 | 2 13/16 • 71 | 13/64 X 3/8 • 5 X 10 | 4.2 • 1.9 |
| 150 | B150BTZ13JK | B | 1.30 | 4 • 102 | 3 3/4 • 95 | 3 3/16 • 81 | 2 7/8 • 73 | 3 1/8 • 79 | 13/64 X 3/8 • 5 X 10 | 6.7 • 3.1 |
| 200 | B200BTZ13JK | B | 1.74 | 4 • 102 | 4 1/2 • 114 | 3 13/16 • 97 | 2 1/2 • 64 | 3 3/4 • 95 | 13/64 X 3/8 • 5 X 10 | 8.5 • 3.9 |
| 250 | B250BTZ13JK | B | 2.17 | 4 3/8 • 111 | 4 1/2 • 114 | 3 13/16 • 97 | 2 7/8 • 73 | 3 3/4 • 95 | 13/64 X 3/8 • 5 X 10 | 10.0 • 4.6 |
| 300 | B300BTZ13JK | B | 2.61 | 4 3/4 • 121 | 4 1/2 • 114 | 3 13/16 • 97 | 3 1/4 • 83 | 3 3/4 • 95 | 13/64 X 3/8 • 5 X 10 | 11.3 • 5.1 |
| 350 | B350BTZ13JK | B | 3.04 | 5 1/4 • 133 | 4 1/2 • 114 | 3 13/16 • 97 | 3 3/4 • 95 | 3 3/4 • 95 | 13/64 X 3/8 • 5 X 10 | 13.6 • 6.2 |
| 500 | B500BTZ13JK | B | 4.35 | 5 1/2 • 140 | 5 1/4 • 133 | 4 3/4 • 121 | 4 3/4 • 108 | 4 3/8 • 111 | 5/16 X 11/16 • 8 X 17 | 19.2 • 8.7 |
| 750 | B750BTZ13JK | B | 6.52 | 7 • 178 | 5 1/4 • 133 | 4 3/4 • 121 | 5 3/4 • 146 | 4 3/8 • 111 | 5/16 X 11/16 • 8 X 17 | 28.1 • 12.8 |
| 1000 | VF1K0BTZ13JK | V | 8.70 | 5 • 127 | 6 3/4 • 171 | 5 3/4 • 146 | 3 5/8 • 92 | 6 1/16 • 154 | 5/16 X 9/16 • 8 X 14 | 28.0 • 12.7 |
| 1000 | EF1K0BTZ13 | E | 8.70 | 7 7/8 • 200 | 5 1/4 • 133 | 4 7/16 • 113 | 5 1/2 • 140 | 4 3/8 • 111 | 9/32 X 13/32 • 7 X 10 | 29.8 • 13.6 |
| 1500 | EF1K5BTZ13 | E | 13.04 | 6 3/4 • 171 | 6 3/4 • 171 | 5 11/16 • 144 | 3 9/16 • 91 | 6 1/16 • 154 | 9/32 X 9/16 • 7 X 14 | 30.0 • 13.6 |
| 2000 | EF2K0BTZ13 | E | 17.39 | 7 • 178 | 6 3/4 • 171 | 5 11/16 • 144 | 4 7/16 • 113 | 6 1/16 • 154 | 9/32 X 9/16 • 7 X 14 | 38.0 • 17.3 |
| 3000 | EF3K0BTZ13 | E | 26.09 | 7 1/2 • 191 | 9 • 229 | 7 9/16 • 192 | 4 1/8 • 105 | 6 1/2 • 165 | 7/16 X 3/4 • 11 X 19 | 53.0 • 24.1 |
| 5000 | EF5K0BTZ13 | E | 43.48 | 7 3/4 • 197 | 9 • 229 | 7 9/16 • 192 | 6 • 152 | 6 1/2 • 165 | 7/16 X 3/4 • 11 X 19 | 89.0 • 40.5 |

JK suffix denotes transformer supplied with primary J-2 jumpers & secondary fuse clips for a 13/16 x 1 1/2 fuse.
Construction figure E units rated for 60Hz at 240 x 480 input and do not come with secondary fuse clips.

## 60 Series - General Purpose Relays 10 A

- 8 - 11 pin plug-in
- AC or DC coils
- Lockable test button with mechanical flag indicator
- Bifurcated contact option
- Sockets and accessories: see 90, 99 and 86 series

| | 60.12 | 60.12 - 0200 | 60.13 |
|---|---|---|---|
| | 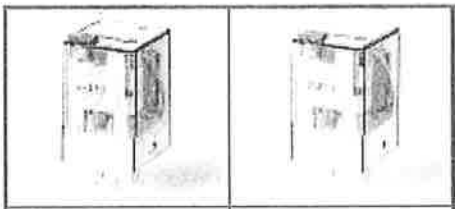 |  | 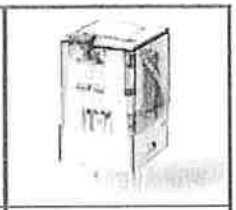 |
| | - 2 pole<br>- 8 pin<br>- Plug in for use with 90 series sockets | - 2 bifurcated contacts, for low level switching capability<br>- 8 pin<br>- Plug in for use with 90 series sockets | - 3 pole<br>- 11 pin<br>- Plug in for use with 90 series sockets |
| | 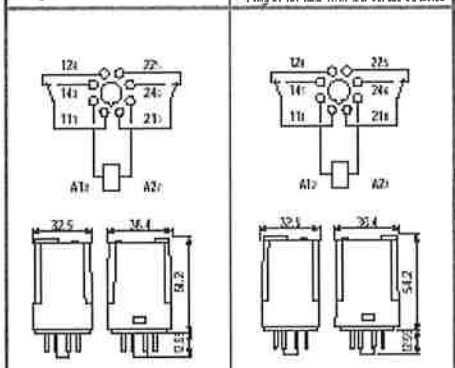 |  | 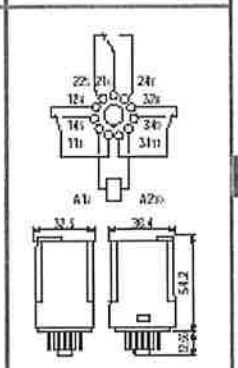 |

* For 400 V applications, where requirements for pollution degree 2 are met.

| | | | | |
|---|---|---|---|---|
| **Contact specifications** | | | | |
| Contact configuration | | 2 CO | 2 CO | 3 CO |
| Rated current/Maximum peak current | A | 10/20 | 6/10 | 10/20 |
| Rated voltage/Maximum switching voltage | V AC | 250/400* | 250/400* | 250/400* |
| Rated load in AC1 | VA | 2,500 | 1,500 | 2,500 |
| Rated load in AC15 (230 VAC) | VA | 500 | 250 | 500 |
| Single phase motor rating (230 VAC) | kW | 0.37 | 0.185 | 0.37 |
| Breaking capacity in DC1: 30/110/220V | A | 10/0.4/0.15 | 6/0.3/0.12 | 10/0.4/0.15 |
| Minimum switching load | mW (V/mA) | 500 (10/5) | 50 (5/5) | 500 (10/5) |
| Standard contact material | | AgNi | AgNi bifurcated contacts | AgNi |
| **Coil specifications** | | | | |
| Nominal voltage ($U_N$) | V AC (50/60 Hz) | 6 - 12 - 24 - 48 - 60 - 110 - 120 - 230 - 240 - 400 | | |
| | V DC | 6 - 12 - 24 - 48 - 60 - 110 - 125 - 220 | | |
| Rated power AC/DC | VA (50 Hz)/W | 2.2/1.3 | 2.2/1.3 | 2.2/1.3 |
| Operating range | AC | $(0.8...1.1)U_N$ | $(0.8...1.1)U_N$ | $(0.8...1.1)U_N$ |
| | DC | $(0.8...1.1)U_N$ | $(0.8...1.1)U_N$ | $(0.8...1.1)U_N$ |
| Holding voltage | AC/DC | $0.8\ U_N/0.5\ U_N$ | $0.8\ U_N/0.5\ U_N$ | $0.8\ U_N/0.5\ U_N$ |
| Max drop-out voltage | AC/DC | $0.2\ U_N/0.1\ U_N$ | $0.2\ U_N/0.1\ U_N$ | $0.2\ U_N/0.1\ U_N$ |
| **Technical data** | | | | |
| Mechanical life AC/DC | cycles | $20 \cdot 10^6/50 \cdot 10^6$ | $20 \cdot 10^6/50 \cdot 10^6$ | $20 \cdot 10^6/50 \cdot 10^6$ |
| Electrical life at rated load AC1 | cycles | $200 \cdot 10^3$ | $250 \cdot 10^3$ | $200 \cdot 10^3$ |
| Operate/release time | ms | 9/9 | 9/9 | 9/9 |
| Insulation according to EN 61810-5 | | 4 kV/3 | 4 kV/3 | 3.6 kV/3 |
| Insulation between coil and contacts (1.2/50µs) | kV | 3.6 | 3.6 | 3.6 |
| Dielectric strength between open contacts | V AC | 1,000 | 1,000 | 1,000 |
| Ambient temperature range | °C | -40...+70 | -40...+70 | -40...+70 |
| Environmental protection | | RT I | RT I | RT I |
| Approvals: (according to type) | | CE ABS GOST RINA | | |

60

## ORDERING INFORMATION

Example: a 60 series plug-in relay, 3 CO (3PDT) with coil rated 12 V DC, test button and mechanical indicator.

| 6 | 0 | . | 1 | 3 | . | 9 | . | 0 1 2 | . | 0 (A) | 0 (B) | 4 (C) | 0 (D) |
|---|---|---|---|---|---|---|---|---|---|---|---|---|---|

Series

Type
1 = 8/11 pin plug-in
6 = Faston 187 (mm 4.8x0.8) with flange mount

No. of poles
2 = 2 pole
3 = 3 pole

Coil version
4 = Current sensing
8 = AC (50/60 Hz)
9 = DC

Coil voltage
see coil specifications

A: Contact material
0 = Standard
2 = AgCdO
5 = AgNi + 5µm Au

B: Contact circuit
0 = CO
2 = Bifurcated contacts 60.12/13 - 6A only

C: Options
0 = None
2 = Mechanical indicator
3 = LED (AC)
4 = Lockable test button + mechanical indicator
5 = Lockable test button + LED (AC)
54 = Lockable test button + LED (AC) + mechanical indicator
6 = LED + diode (positive to pin 2, DC)
7 = Lockable test button + LED + diode (positive to pin 2)
74 = Lockable test button + LED + diode (positive to pin 2) + mechanical indicator

D: Special versions
0 = Standard

Only combinations in the same row are possible

Preferred versions

| | coil version | A | B | C | D |
|---|---|---|---|---|---|
| 60.12/13 | AC/DC | 0 | 0 | 4 | 0 |
| 60.62/63 | AC/DC | 0 | 0 | 0 | 0 |

All versions

| | coil version | A | B | C | D |
|---|---|---|---|---|---|
| 60.12/13 | AC | 0 - 2 | 0 | 0 - 2 - 3 - 4 - 5 | 0 |
| | AC | 0 - 2 | 0 | 54 | / |
| | AC | 5 | 0 - 2 | 0 - 2 - 3 - 4 - 5 | 0 |
| | AC | 5 | 0 - 2 | 54 | / |
| | DC | 0 - 2 | 0 | 0 - 2 - 4 - 5 - 7 | 0 |
| | DC | 0 - 2 | 0 | 74 | / |
| | DC | 5 | 0 - 2 | 0 - 2 - 4 - 5 - 7 | 0 |
| | DC | 5 | 0 - 2 | 74 | / |
| | current sensing | 0 | 0 | 4 | 0 |
| 60.62/63 | AC/DC | 0 - 2 - 5 | 0 | 0 | 0 |



## POSSIBLE OPTIONS

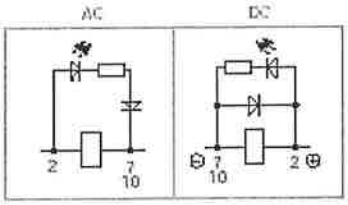


Option = 0030 0050 0054

Option = 0060 0070 0074

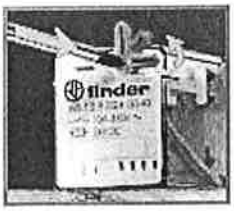


LOCKABLE TEST BUTTON AND MECHANICAL FLAG INDICATOR (0040)

The dual-purpose Finder test button can be used in two ways:

Case 1) The plastic pip (located directly above the test button) remains intact. In this case, when the test button is pushed, the contacts operate. When the test button is released the contacts return to their former state.

Case 2) The plastic pip is broken-off (using an appropriate cutting tool). In this case, (in addition to the above function), when the test button is pushed and rotated, the contacts are latched in the operating state, and remain so until the test button is rotated back to its former position. In both cases ensure that the test button actuation is swift and decisive.

## ACCESSORIES

060.72

| | |
|---|---|
| Sheet of marker tags for relay types 60.12 and 60.13 (72 tags): 6x12mm | 060.72 |

## TECHNICAL DATA

INSULATION

| | | | | |
|---|---|---|---|---|
| INSULATION according to EN 61810-5 | insulation rated voltage | V | 250 | |
| | rated impulse withstand voltage | kV | 4 (2 pole) | 3.6 (3 pole) |
| | pollution degree | | 3 | |
| | overvoltage category | | III | |

60

IMMUNITY

| | |
|---|---|
| CONDUCTED DISTURBANCE IMMUNITY | BURST (according to EN 61000-4-4) level 4 (4kV) |
| | SURGE (according to EN 61000-4-5) level 4 (4kV) |

OTHER DATA

| | | | |
|---|---|---|---|
| BOUNCE TIME: NO/NC | ms | 2/4 | |
| VIBRATION RESISTANCE (10...55Hz): NO/NC | g/g | 5/3 | |
| POWER LOST TO THE ENVIRONMENT | | 2 CO | 3 CO |
| without contact current | W | 1.3 | 1.3 |
| with rated current | W | 2.7 | 3.4 |

## CONTACT SPECIFICATIONS

F 60

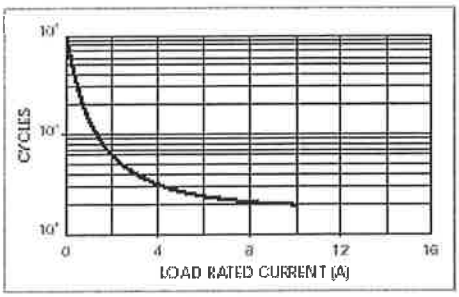


Electrical life vs AC1 load.

H 60

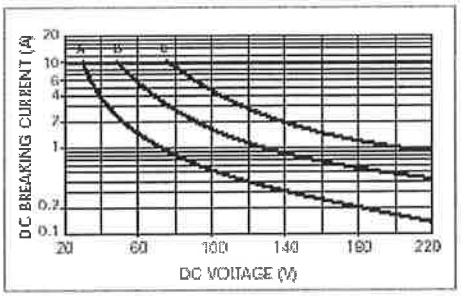


Breaking capacity for DC1 load.
A = Load applied to 1 contact
B = Load applied to 2 contacts in series
C = Load applied to 3 contacts in series

• When switching a resistive load (DC1) having voltage and current values under the curve the expected electrical life is ≥ 100·10³ cycles.
• In case of DC13 loads the connection of a diode in parallel with the load will permit the same electrical life as for a DC1 load.
**Note:** the release time of load will be increase.

## COIL SPECIFICATIONS

DC VERSION DATA

| Nominal voltage $U_N$ V | Coil code | Operating range $U_{min}$ V | $U_{max}$ V | Resistance R Ω | Rated coil consumption (at $U_N$) mA |
|---|---|---|---|---|---|
| 6 | 9.006 | 4.8 | 6.6 | 28 | 214 |
| 12 | 9.012 | 9.6 | 13.2 | 110 | 109 |
| 24 | 9.024 | 19.2 | 26.4 | 445 | 53.9 |
| 48 | 9.048 | 38.4 | 52.8 | 1,770 | 27.1 |
| 60 | 9.060 | 48 | 66 | 2,700 | 21.7 |
| 110 | 9.110 | 88 | 121 | 9,420 | 11.7 |
| 125 | 9.125 | 100 | 137.5 | 12,000 | 10.4 |
| 220 | 9.220 | 176 | 242 | 37,300 | 5.8 |

AC VERSION DATA

| Nominal voltage $U_N$ V | Coil code | Operating range $U_{min}$ V | $U_{max}$ V | Resistance R Ω | Rated coil consumption (at $U_N$ (50Hz)) mA |
|---|---|---|---|---|---|
| 6 | 8.006 | 4.8 | 6.6 | 4.5 | 367 |
| 12 | 8.012 | 9.6 | 13.2 | 19 | 183 |
| 24 | 8.024 | 19.2 | 26.4 | 74 | 90 |
| 48 | 8.048 | 38.4 | 52.8 | 290 | 47 |
| 60 | 8.060 | 48 | 66 | 450 | 37 |
| 110 | 8.110 | 88 | 121 | 1,600 | 20 |
| 120 | 8.120 | 96 | 132 | 1,940 | 18.6 |
| 230 | 8.230 | 184 | 253 | 7,250 | 10.5 |
| 240 | 8.240 | 192 | 264 | 8,500 | 9.2 |
| 400 | 8.400 | 320 | 440 | 19,800 | 6 |

R 60 DC

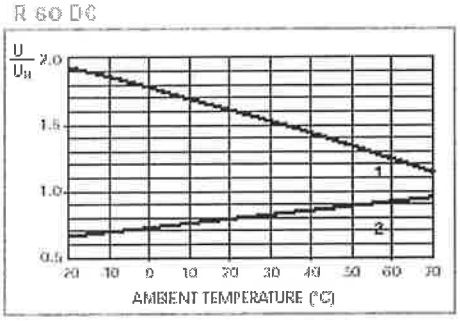


Operating range (DC version) vs ambient temperature.
1 - Max coil voltage permitted.
2 - Min pickup voltage with coil at ambient temperature.

R 60 AC

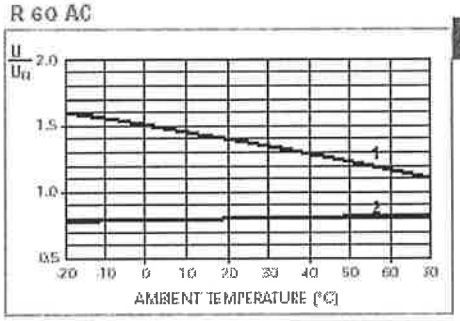


Operating range (AC version) vs ambient temperature.
1 - Max coil voltage permitted.
2 - Min pick-up voltage with coil at ambient temperature.



## CURRENT SENSING VERSION

Wiring Diagram

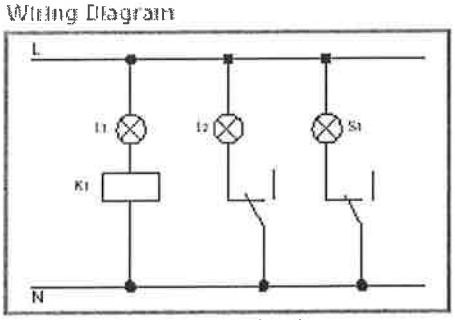


Typical application with current sensing relays.
An open circuit filament of lamp L1 is detected by the current sensing relay coil (K1) which causes the back-up safety lamp L2 to be energised, and indication of failure at the control panel via lamp S1.
Example: navigation light.
L1 = Light
L2 = Safety light
S1 = Control light
K1 = Relay

60 Series - CURRENT SENSING AC

| Coil code | $I_{min}$ (A) | $I_N$ (A) | $I_{max}$ (A) | R (Ω) |
|---|---|---|---|---|
| 4251 | 2.1 | 2.5 | 3.0 | 0.05 |
| 4181 | 1.5 | 1.8 | 2.2 | 0.10 |
| 4161 | 1.4 | 1.6 | 1.9 | 0.12 |
| 4121 | 1.0 | 1.2 | 1.4 | 0.22 |
| 4101 | 0.86 | 1.0 | 1.2 | 0.32 |
| 4051 | 0.42 | 0.5 | 0.6 | 1.28 |
| 4041 | 0.34 | 0.4 | 0.5 | 2.00 |
| 4031 | 0.26 | 0.3 | 0.4 | 3.57 |
| 4021 | 0.17 | 0.2 | 0.25 | 8.0 |
| 4011 | 0.085 | 0.1 | 0.15 | 32.1 |

60 Series - CURRENT SENSING DC

| Coil code | $I_{min}$ (A) | $I_N$ (A) | $I_{max}$ (A) | R (Ω) |
|---|---|---|---|---|
| 4202 | 1.7 | 2.0 | 2.4 | 0.15 |
| 4182 | 1.5 | 1.8 | 2.2 | 0.19 |
| 4162 | 1.4 | 1.6 | 1.9 | 0.24 |
| 4142 | 1.2 | 1.4 | 1.7 | 0.31 |
| 4122 | 1.0 | 1.2 | 1.4 | 0.42 |
| 4102 | 0.86 | 1.0 | 1.2 | 0.61 |
| 4092 | 0.8 | 0.9 | 1.1 | 0.75 |
| 4062 | 0.5 | 0.6 | 0.7 | 1.70 |
| 4032 | 0.26 | 0.3 | 0.4 | 6.70 |
| 4012 | 0.085 | 0.1 | 0.15 | 61 |

Other types of current sensing relays are available on request.

# 85 Series - Miniature plug-in timers 7 - 10 A

- *Plug-in timer relay*
- *2, 3 or 4 CO (DPDT, 3PDT or 4PDT) contact available*
- *Seven time scales, from 0.05s to 100h*
- *Multifunctions*
- *Sockets: see 94 series*

85.02/85.04

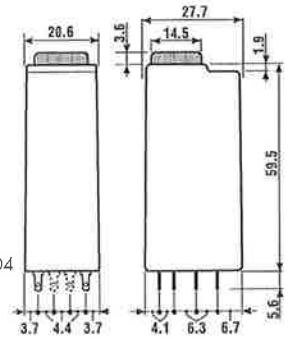


85.03

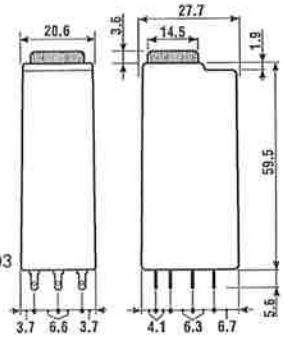


| | 85.02 | 85.03 | 85.04 |
|---|---|---|---|
| | | | |
| | - 2 pole, 10 A<br>- AC/DC supply non polarized<br>- Plug-in for use with 94 series sockets | - 3 pole, 10 A<br>- AC/DC supply non polarized<br>- Plug-in for use with 94 series sockets | - 4 pole, 7 A<br>- AC/DC supply non polarized<br>- Plug-in for use with 94 series sockets |
| | **AI:** ON delay<br>**DI:** ON pulse<br>**SW:** Symmetrical recycler: ON start<br>**GI:** Fixed pulse (0.5s) delayed | **AI:** ON delay<br>**DI:** ON pulse<br>**SW:** Symmetrical recycler: ON start<br>**GI:** Fixed pulse (0.5s) delayed | AI: ON delay<br>**DI:** ON pulse<br>**SW:** Symmetrical recycler: ON start<br>**GI:** Fixed pulse (0.5s) delayed |
| | 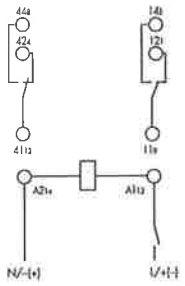 <br>wiring diagram | 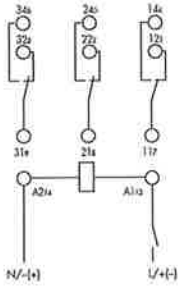 <br>wiring diagram | 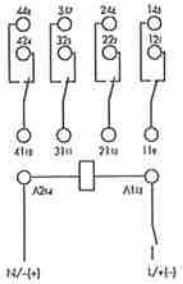 <br>wiring diagram |
| **Contact specifications** | | | |
| Contact configuration | 2 CO (DPDT) | 3 CO (3PDT) | 4 CO (4PDT) |
| Rated current/Maximum peak current A | 10/20 | 10/20 | 7/15 |
| Rated voltage/Maximum switching voltage V AC | 250/400 | 250/400 | 250/250 |
| Rated load in AC1 VA | 2,500 | 2,500 | 1,750 |
| Rated load in AC15 (230 V AC) VA | 500 | 500 | 350 |
| Single phase motor rating (230 V AC) kW | 0.37 | 0.37 | 0.125 |
| Breaking capacity in DC1: 30/110/220 V A | 10/0.25/0.12 | 10/0.25/0.12 | 7/0.25/0.12 |
| Minimum switching load mW(V/mA) | 300 (5/5) | 300 (5/5) | 300 (5/5) |
| Standard contact material | AgNi | AgNi | AgNi |
| **Supply specifications** | | | |
| Nominal voltage V AC (50/60 Hz) | 230...240 | 230...240 | 230...240 |
| V AC/DC | 12 - 24 - 48 - 110...125 (non polarized) | | |
| Rated power AC/DC VA (50 Hz)/W | 2/2 | 2/2 | 2/2 |
| Operating range AC | (0.85...1.1)$U_N$ | (0.85...1.1)$U_N$ | (0.85...1.1)$U_N$ |
| DC | (0.85...1.1)$U_N$ | (0.85...1.1)$U_N$ | (0.85...1.1)$U_N$ |
| **Technical data** | | | |
| Specified time range | (0.05...1)s, (0.5...10)s, (5...100)s, (0.5...10)min, (5...100)min, (0.5...10)h, (5...100)h | | |
| Repeatability % | ± 2 | ± 2 | ± 2 |
| Recovery time ms | ≤ 20 | ≤ 20 | ≤ 20 |
| Minimum control impulse ms | — | — | — |
| Setting accuracy-full range % | ± 5 | ± 5 | ± 5 |
| Electrical life at rated load in AC1 cycles | 200 · $10^3$ | 200 · $10^3$ | 200 · $10^3$ |
| Ambient temperature range °C | –20...+60 | –20...+60 | –20...+60 |
| Protection category | IP 40 | IP 40 | IP 40 |
| **Approvals** (according to type): | CE GOST cULus | | |

85

## ORDERING INFORMATION

Example: 85 series timer, 4 CO (4PDT), 24 V AC/DC supply voltage with AI - DI functions.

8 5 . 0 4 . 0 . 0 2 4 . 0 0 0 0

**Series**

**Type**
0 = Multifunction (AI, DI, GI, SW)

**No. of poles**
2 = 2 pole - 10 A
3 = 3 pole - 10 A
4 = 4 pole - 7 A

**Supply voltage**
012 = 12 V AC/DC
024 = 24 V AC/DC
048 = 48 V AC/DC
125 = (110...125)V AC/DC
240 = (230...240)V AC

**Supply version**
0 = AC (50/60 Hz)/DC
8 = AC (50/60 Hz) for 240 V only

## TECHNICAL DATA

### EMC SPECIFICATIONS

| TYPE OF TEST | | REFERENCE STANDARD | |
|---|---|---|---|
| Electrostatic discharge | - contact discharge | EN 61000-4-2 | n.a. |
| | - air discharge | EN 61000-4-2 | 8 kV |
| Radio-frequency electromagnetic field (80 ÷ 1000 MHz) | | EN 61000-4-3 | 15 V/m |
| Fast transients (burst) (5-50 ns, 5 kHz) on Supply terminals | | EN 61000-4-4 | 4 kV |
| Surges (1.2/50 µs) on Supply terminals | - common mode | EN 61000-4-5 | 4 kV |
| | - differential mode | EN 61000-4-5 | 2 kV |
| Radio-frequency common mode (0.15 ÷ 80 MHz) on Supply terminals | | EN 61000-4-6 | 10 V |
| Power-frequency (50 Hz) | | EN 61000-4-8 | 30 A/m |
| Radiated and conducted emission | | EN 55022 | class B |

### INSULATION

| Dielectric strength | | 85.02/03 | 85.04 |
|---|---|---|---|
| - between input and output circuit | V AC | 2,000 | 2,000 |
| - between open contacts | V AC | 1,000 | 1,000 |
| Insulation (1.2/50 µs) between input and output | kV | 6 | 4 |

85

### OTHER DATA

| Power lost to the environment | | 2 pole | 3 pole | 4 pole |
|---|---|---|---|---|
| without contact current | W | 1.6 | 1.6 | 1.6 |
| with rated current | W | 3.7 | 4.7 | 3.6 |

## TIME SCALES

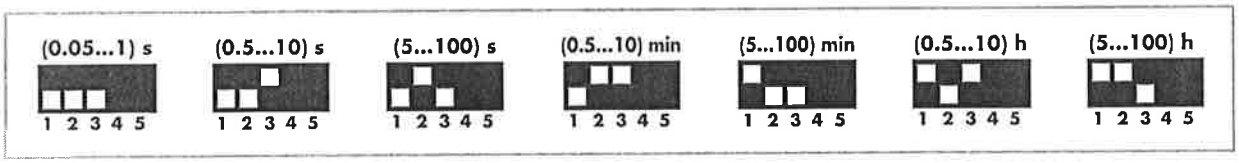


NOTE: time scales and functions must be set before energising the timer.

## FUNCTIONS

| | LED | Supply voltage | NO (SPDT-NO) output contact | Contacts Open | Contacts Closed |
|---|---|---|---|---|---|
| U = Supply voltage<br>= Output contact | | OFF | Open | x1 - x4 | x1 - x2 |
| | | ON | Open | x1 - x4 | x1 - x2 |
| | | ON | Open (Timing in Progress) | x1 - x4 | x1 - x2 |
| | | ON | Closed | x1 - x2 | x1 - x4 |

Wiring diagram

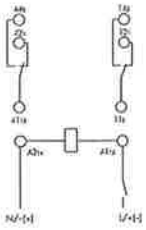
85.02

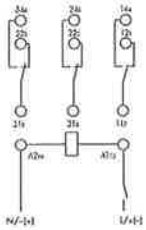
85.03

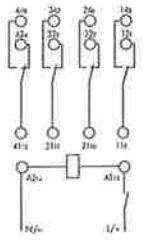
85.04

**Types: 85.02, 85.03, 85.04**

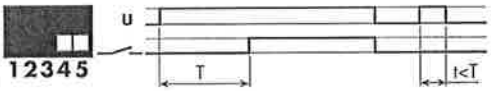


**(AI) ON delay.**
Apply power to timer.
Output contacts transfer after preset time has elapsed.
Reset occurs when power is removed.

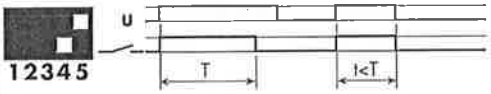


**(DI) ON pulse.**
Apply power to timer.
Output contacts transfer immediately.
After the preset time has elapsed, contacts reset.

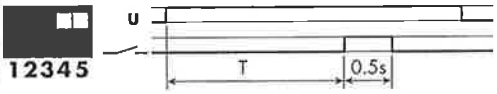


**(GI) Fixed pulse (0.5s) delayed.**
Apply power to timer. Output contacts transfer after preset time has elapsed. Reset occurs after a fixed time of 0.5s. 0.5s.

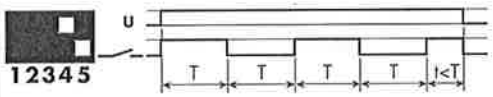


**(SW) Symmetrical recycler: ON start.**
Apply power to timer.
Output contacts transfer immediately and cycle between ON and OFF for as long as power is applied.
The ratio is 1:1 (time on = time off).

85

| | |
|---|---|
| U | = Supply voltage |
| S | = Signal switch |
| Uc | = Supply voltage to the timer |
| 11-14 | = Self-holding contact |
| | = Output contact |

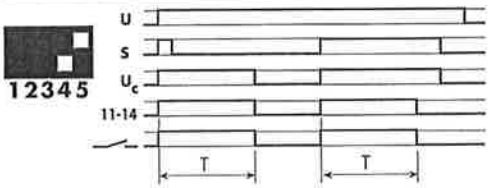


**Signal ON Pulse**
On mometary closure of Signal Switch (S) > 50 ms, the output contacts transfer and remain so (with self-holding on contact 11-14) for the duration of the preset delay, after which they reset.

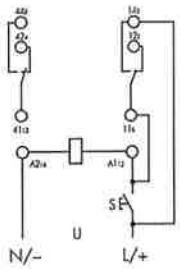

85.02

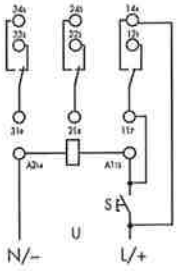

85.03

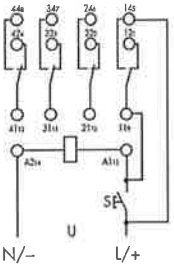

85.04

# 94 Series - Sockets and accessories for 85 series timers

94.04

| Timer type | 85.02 | | 85.03 | | 85.04 | |
|---|---|---|---|---|---|---|
| Colour | BLUE | BLACK | BLUE | BLACK | BLUE | BLACK |
| **Clamp terminal socket:** panel or 35 mm rail (EN 50022) mount | 94.02 | 94.02.0 | 94.03 | 94.03.0 | 94.04 | 94.04.0 |
| Metal retaining clip (supplied with timer) | 094.81 | | | | | |
| 6-way jumper link for 94.02, 94.03 and 94.04 sockets | 094.06 | 094.06.0 | 094.06 | 094.06.0 | 094.06 | 094.06.0 |
| Identification tag | 094.00.4 | | | | | |

Approvals
(according to type):

CE B SP GOST cULus

- Rated values: 10 A - 250 V
- Dielectric strength: ≥ 2 kV AC
- Protection category: IP 20
- Ambient temperature: (-40...+70)°C
- Torque: 0.5 Nm
- Wire strip length: 8 mm
- Max wire size:

| | solid wire | stranded wire |
|---|---|---|
| mm² | 1x6 / 2x2.5 | 1x4 / 2x2.5 |
| AWG | 1x10 / 2x14 | 1x12 / 2x14 |

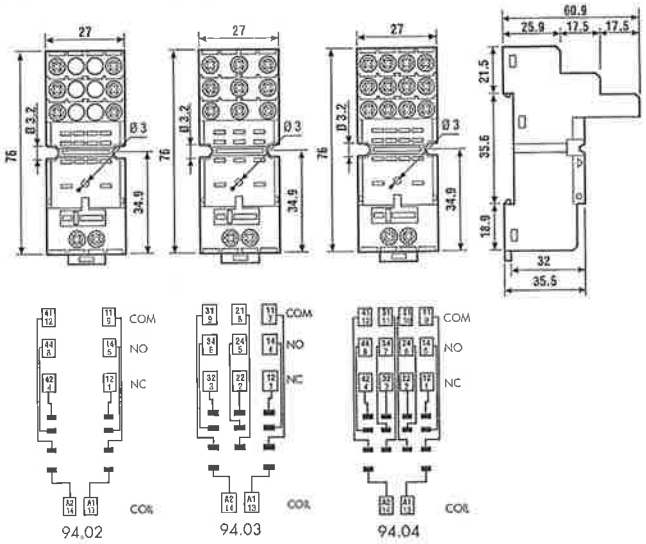


| 6-way jumper link | 094.06 |
|---|---|

- Rated values: 10 A - 250 V

094.06

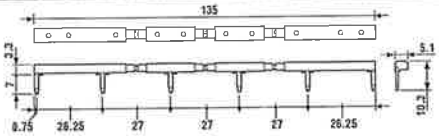


85

94.54.1

| Relay type | 85.02, 85.04 | |
|---|---|---|
| Colour | BLUE | BLACK |
| **Screwless terminal socket:** 35 mm rail (EN 50022) mount | 94.54.1 | 94.54.10 |
| Metal retaining clip | 094.81 | |

Approvals
(according to type):

CE

- Rated values: 10 A - 250 V
- Dielectric strength: ≥ 2 kV AC
- Protection category: IP 20
- Ambient temperature: (-25...+70)°C
- Wire strip length: 7 mm
- Max wire size:

| | solid wire | stranded wire |
|---|---|---|
| mm² | 2x(0.2...1.5) | 2x(0.2...1.5) |
| AWG | 2x(24...18) | 2x(24...18) |

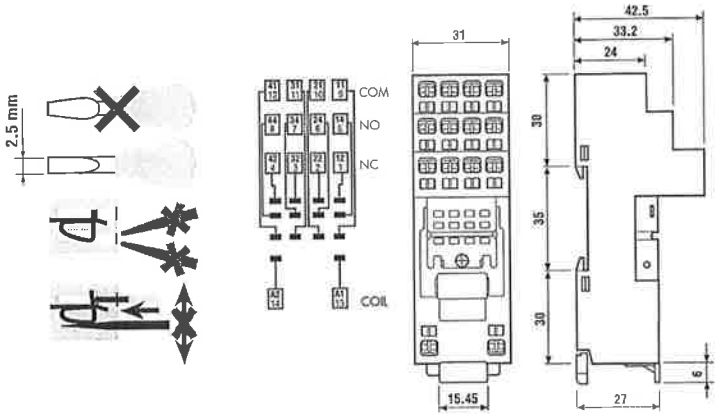

## SYMCOM (ISS-101)

## INTRINSICALLY SAFE RELAY

**Features**

- UL 913 listed.*
- Compact Design
- Finger safe terminals.
- DIN rail or surface mountable.
- LED state indicator.
- Isolated output relay for PLC or control voltage.

MotorSaver

**Model ISS-100**

**Intrinsically Safe Switch**

•

**Engineered Protection**

•

**Made in USA**

The ISS-100 Isolated Switch is UL 913* listed as an associated apparatus for interfacing between hazardous and non-hazardous areas. The ISS-100 must be installed in a non-hazardous area. Follow SymCom's Control Drawing 100 for proper installation.

***Meets all new requirements for UL 913 sixth edition, August 8, 2002!***

FRONT VIEW

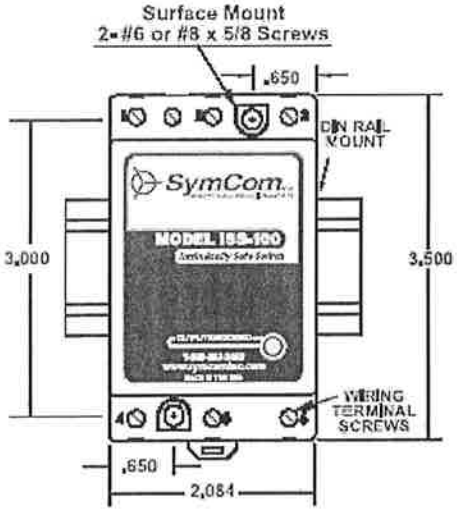


BOTTOM VIEW

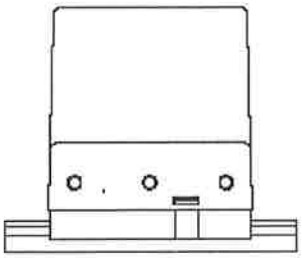

SIDE VIEW

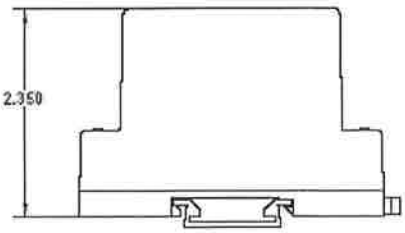

MotorSaver®
THREE-PHASE ELECTRIC MOTOR PROTECTOR

**Specifications**
•
**Operating Points**
•
**Special Options**

# Model ISS-100
## INTRINSICALLY SAFE SWITCH

### SPECIFICATIONS

Supply Voltage ..... 90 - 120 VAC

Relay Output Rating
- General Purpose ..... 8 Amps @ 115 VAC
- Pilot Duty ..... 180 VA @ 115 VAC, C300
- Relay Contact Life (Mechanical) ..... 100,000 cycles min. @ rated load
- Relay Contact Life (Electrical) ..... 10,000,000 cycles

Operating Temperature ..... -20 to 55° C

Weight ..... 8 oz.

Power Consumption ..... 1.5 Watts max.

Wire range ..... 12 to 20 AWG

Terminal Torque ..... 6 in. lbs.

Provides intrinsically safe circuits in the following locations: ..... Class I, Groups A,B,C,D; Class II, Groups E,F,G; and Class III

Entity Parameters ..... $V_{oc}$ = 16.8 V
$I_{sc}$ = 1.6 mA
$L_a$ = 0
$C_a$ = 0

Standards Passed
- Electrostatic Discharge (ESD) ..... IEC 1000-4-2, Level 3, 6kV contact, 8kV air.
- Radio Frequency Immunity (RFI) ..... IEC 61000-4-2, Level 3, 10V/m
- Fast Transients ..... IEC 61000-4-4, Level 3, 4kV input power

SymCom warrants its products against defects in material or workmanship for a period of two (2) years from the date of manufacture. For complete information on warranty, liability, terms, returns, and cancellations, please refer to the SymCom Terms and Conditions of Sale document.

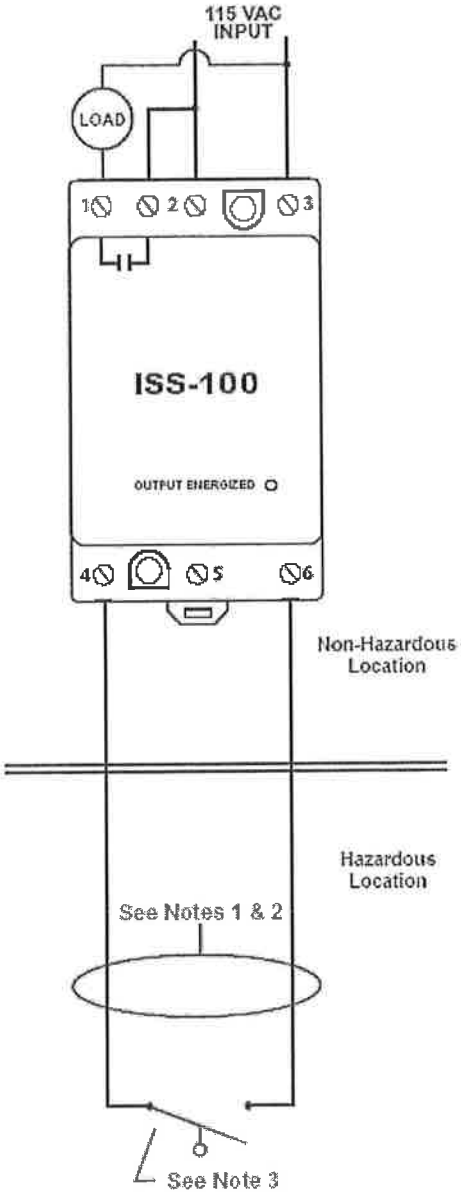


TYPICAL WIRING DIAGRAM

NOTES:
1. Maximum distance between unit and switch contact contact is 10,000 feet.
2. All non-intrinsically safe wiring shall be separated from intrinsically safe wiring per NEC article 500 and ANSI/NFPA 70.
3. All switch contacts shall be non-energy storing, containing no inductance or capacitance.

# PANEL ALARM LIGHT - FLASHING

LX40F - RED, AMBER, GREEN, BLUE, CLEAR

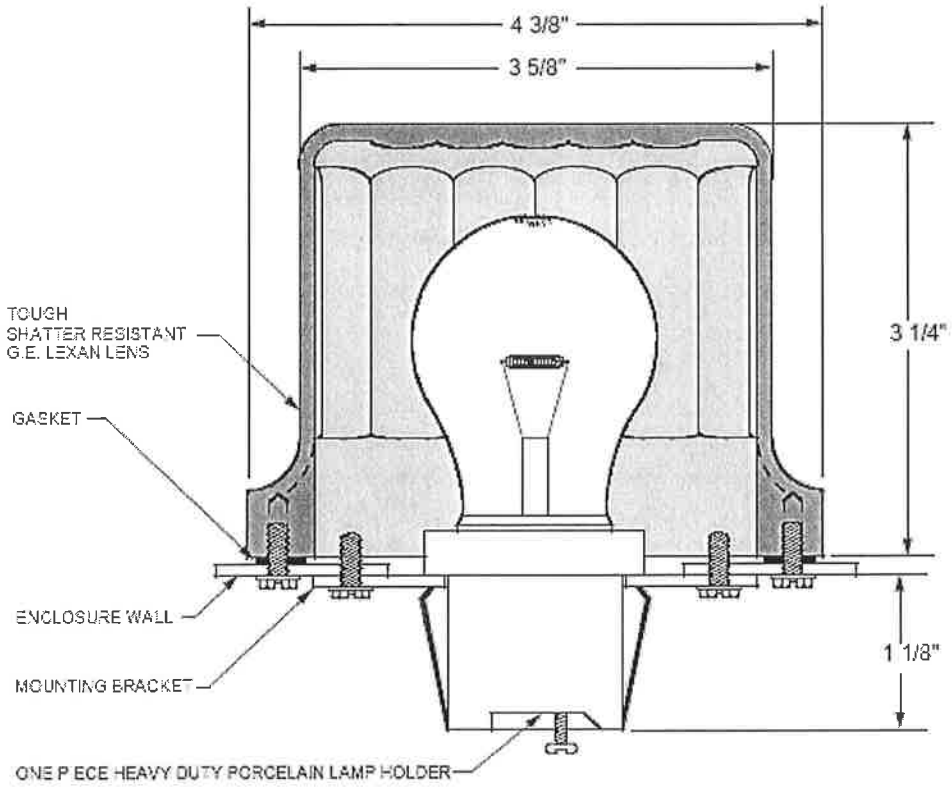


## ENVIRONMENTAL RATINGS

**TYPE 3R, 4, 4X, 12, 13**

- Low profile, top mounted gives 360 visibility
- Easy to install
- Weather proof gasket
- Shatter resistant globe & U.V. Stabilized
- Universial mounting with hardware & instructions
- Colors: Red, Amber, Green, Blue or Clear
- Supplied with 40 Watt clear rough service appliance bulb to withstand temperature changes
- Supplied with Ingram's SSF150W flasher
- Universial mounting with hardware & instructions
- Globe height is 3 1/4" with a Diameter of 4 3/8"
- Flame Retardant

The entire assembly has Underwriters Laboratories, Inc. recognition. (E121431)

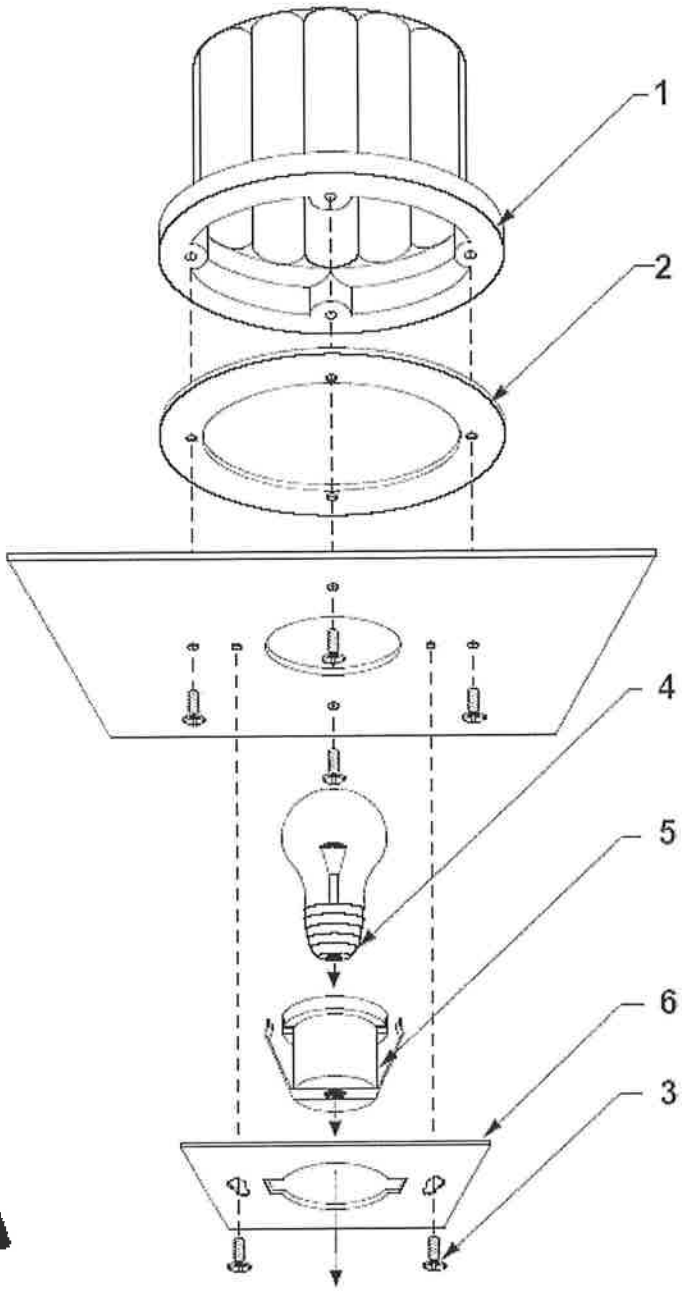


| ITEM | DESCRIPTION |
|---|---|
| 1 | LEXAN ALARM GLOBE - TYPE 943A (Red, Amber, Green or Blue) |
| 2 | CLOSED CELL NEOPRENE GASKET |
| 3 | SLTD. HEX WASHER HD.TAPPING SCREW. 8-32 X 3/8 (6 QTY.) |
| 4 | LIGHT BULB 130V, 40W |
| 5 | LAMP SOCKET, SNAP-IN TYPE H.D. PORCELAIN |
| 6 | SOCKET MTG. PLATE |
| | SSF150W - SOLID STATE FLASHER |

# INGRAM PRODUCTS (AHC-50W)

# ANTI-CONDENSATION SPACE HEATER

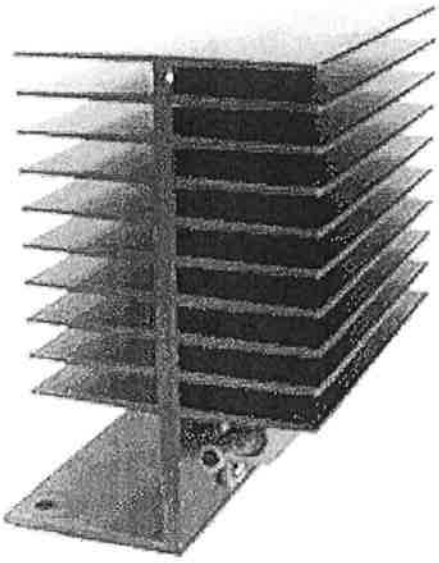

E121431

### *Features*

- UL Recognized, File No. E121431
- Touch Safe, will not burn skin when touched
- Size it right and no thermostat is required
- No moving parts to wear out
- Compact size, small foot print
- Corrosion resistant black anodized finish

### *Specifications*

- Operating Voltage, 120 VAC
- Current Draw:

ACH-15W = .125 amps
ACH-30W = .250 amps
ACH-50W = .417 amps

- Extruded aluminum, black anodized finish
- Life expectancy is 20 years minimum

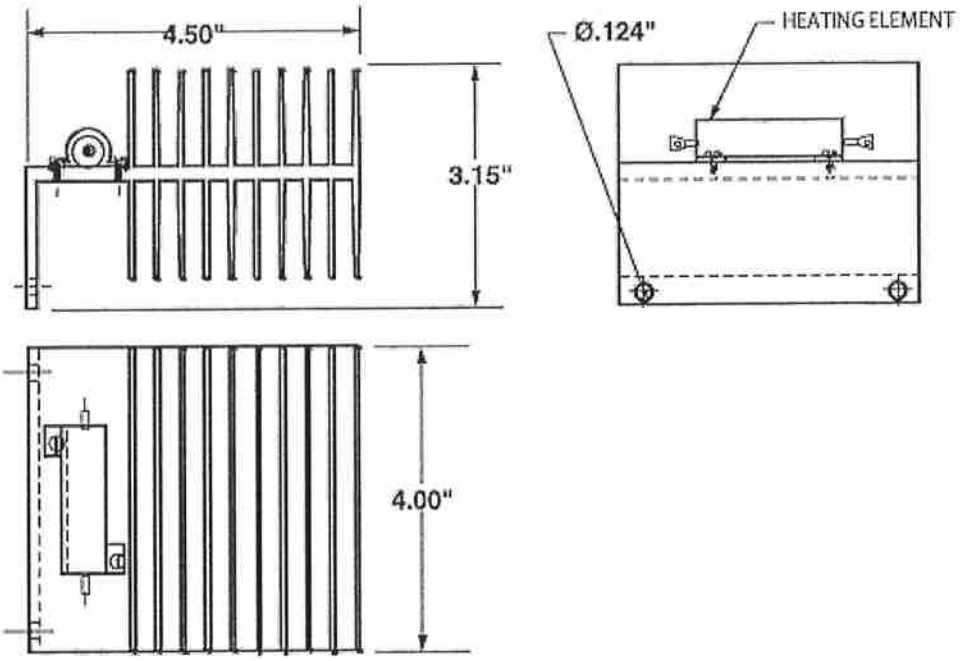


The ACH series anti-condensate space heaters are designed to maintain the temperature inside of an enclosure several degrees above surrounding ambient temperature and above the dew point. This will prevent corrosion inside due to condensation.

# TELECOM / DATACOM / SIGNAL LINE PROTECTION (Multiple Medium)

## PC642 SERIES

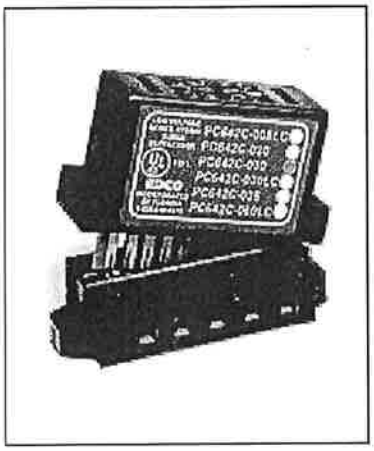

The **PC642 Series** surge suppressor is a dual pair (four wire) module implementing three stage hybrid technology. This module addresses over voltage transients with gas tubes and silicon avalanche components. In addition, sneak and fault currents are mitigated with resettable fuses (PTC's). The PTC's increase resistance several orders of magnitude when overcurrents exceed safe levels. A normal state resumes when overcurrents are removed. The ability to self restore in this manner significantly increases suppressor performance and survivability.

The **PC642** card edge module is gold-plated, double sided and is designed to mate with the **PCB1B** gold-plated female terminal connector. When snapped together, the data circuits "pass thru" the protector in a serial fashion from the four "Field Side" terminals to the four "Electronics Side" terminals. Terminals 1 or 10 of the **PCB1B** must be attached to Building Approved ground per EDCO *TECHNICAL BULLETIN* # 2015.

## FEATURES

- Lightning Protection for Low Voltage Data Signal Lines
- Three-Stage Protection
- Sneak/Fault Current Protection
- Resettable Fusing - PTC's
- Low Capacitance Option *
- Plug-in Module
- Fast Response Time
- UL 497B Listed

UL® 497B

## SPECIFICATIONS

Peak Surge Current (10 times):
- 8 x 20µs..... 10kA
- 10 x 700µs..... 500A per line

Life Expectancy:
- 8 x 20µs (2000A)..... >100 occurrences
- 10 x 700µs (400A)

Response Time..... <1 nanosecond
Voltage Clamp ..... 8, 15, 20, 30, 36, 43, 50, 60 or 200
Technology..... SAD Hybrid
Resistance (depending on model)..... 4.7W to 15W per line
Capacitance (average):
- Standard models..... 1500pf
- Low Capacitance models..... 50pf

Operating Temperature..... -40°C to +85°C
Weight..... 2.0 oz.
Dimensions PC642 & PCB1B:
- HxWxL..... 1.8" x 1.0" x 2.4"

**Caution:** The hybrid design of this product includes series resistance. Do not place this product in service on any signal line capable of supplying more than 150 milliamperes continuously.

* Wire wound resistors are used instead of "PTC's" on low capacitance models (PC642C-_ _ _ LC) and models clamping above 60 volts (PC642C-200, 200D, 200X, 200LC).

## TERMINAL ASSIGNMENTS

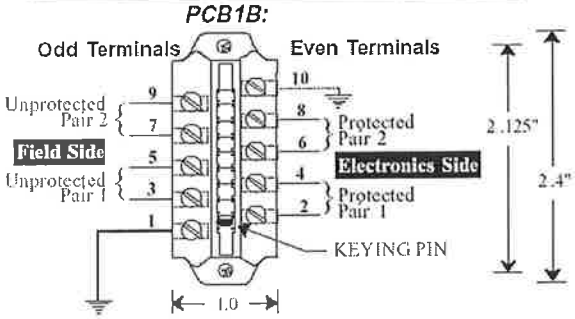


Ground Terminal 1 or 10 to Building Approved Ground

## ORDERING INFORMATION

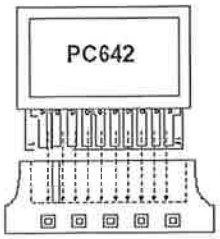


**APPLICATION:**

| | |
|---|---|
| RS485, RS422: | PC642C-008LC & PCB1B |
| RS423, Token Ring: | PC642C-008LC & PCB1B |
| RS232 | PC642C-020 & PCB1B |
| E-NET, 10 BASE T: | PC642C-0301.C & PCB1B |
| 4-20 ma: | PC642C-036 & PCB1B |
| Telephone (C.O. line): | PC642C-200 & PCB1B |
| Telephone T1 Data: | PC642C-060LC & PCB1B |

PC642C - [ ][ ][ ][ ]

VOLTAGE CLAMP

| | | | |
|---|---|---|---|
| 8 Volts | 0 | 0 | 8 |
| 15 Volts | 0 | 1 | 5 |
| 20 Volts | 0 | 2 | 0 |
| 30 Volts | 0 | 3 | 0 |
| 36 Volts | 0 | 3 | 6 |
| 43 Volts | 0 | 4 | 3 |
| 50 Volts | 0 | 5 | 0 |
| 60 Volts | 0 | 6 | 0 |
| ♦ *300 Volts | 2 | 0 | 0 |

| | |
|---|---|
| | no suffix<br>stage 2 clamp<br>each line-to-ground |
| D | stage 2 clamp<br>line-to-line only |
| X | stage 2 clamp<br>line-to-line and each line to ground |
| LC | low capacitance option<br>stage 2 clamp<br>line-to-line and each line to ground<br>(see note: ♦) |

* Not UL Listed

# STAHL (9001/01-280-165-10)

# INTRINSICALLY SAFE BARRIER

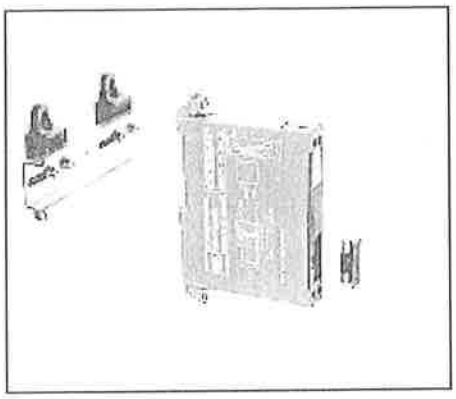

Exploded view of a Type 9001 single channel barrier showing 35mm DIN rail, barrier, replaceable fuse, and label holder.

## Series 9000 INTRINSPAK Intrinsic Safety Barrier

One Step, Snap-On 35mm DIN Rail Mounting and Grounding
... eliminates external ground bars, wiring, tools, and adaptors.

Patented Replaceable 160mA Fuse
... provides overvoltage and reverse polarity protection.

Lowest Internal Resistance
... reduces circuit loading problems.

Common ½" Wide Housing for Single and Dual Channel Versions
... easily accessible terminals.

Short-Circuit Proof Connections
... prevents blown fuses when field wiring is shorted.

Approvals to Worldwide Standards
... FM, UL, CSA, PTB (CENELEC), MSHA, SA and others

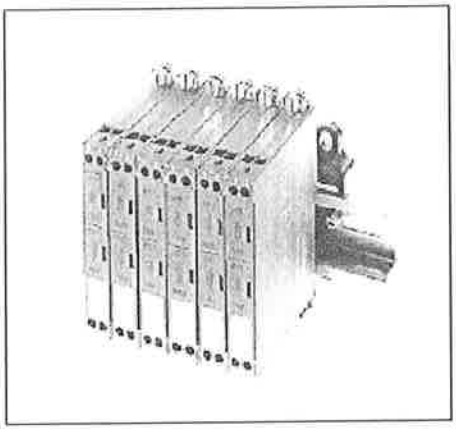

Multiple barriers mounted to 35mm DIN Rail. Each barrier occupies 1/2" of rail space. Once mounted the barrier forms an electrical connection with the rail which now serves as the intrinsic safety ground bus.

## General Description

First introduced in 1991, the Series 9000 INTRINSPAK has quickly become the industry standard for intrinsic safety barrier design. Within the series the user can choose from the Type 9001 single channel, Type 9002 dual channel, or for applications requiring up to ¾W of power, the Type 9004 single channel with electronic current limitation.

All three types share a common ½" wide housing which snaps directly to a 35mm DIN rail. Once mounted, an electrical connection is formed between the barrier and the rail. This rail now serves as the intrinsic safety ground bus when connected to the designated grounding point. Two additional ground lugs are provided and may be used as a redundant grounding method or for terminating shields.

Each barrier also contains a replaceable 160mA fuse cartridge for each channel. This fuse is located within the front faceplate and protects the barrier from pole reversal and voltage spikes at the input side (terminals 1 and 2). Unlike other safety barrier designs, this fuse will not blow should the field wiring be shorted to ground.

Safety barriers are polarity sensitive devices therefore they are available in +DC, -DC, and AC voltage ratings. They also contain an internal resistance which may cause loading problems in some applications. STAHL safety barriers have been designed to minimize this resistance and offer the lowest available ratings in the industry.

Many voltage and resistance value combinations are available within the Series 9000 INTRINSPAK. However, most instrumentation applications can be handled by no more than four models. Refer to the Program Overview on page 5 for a complete listing.

## Electrical Specifications

*The following are common characteristics of the Types 9001, 9002, and 9004 safety barriers.*

| | | |
|---|---|---|
| Rated Voltage | | Refer to tables |
| Rated Current | | Refer to tables |
| Replaceable Fuse Rating | | 160mA per channel |
| Pole Reversal Protection | | Protected by replaceable fuse |
| Current Limitation | *Type 9001* | Resistive |
| | *Type 9002* | Resistive |
| | *Type 9004* | Electronic |
| Leakage Current | | 1µA unless stated otherwise<br><2mA for 9004/5. |
| Temperature Effect | | <0.25%/10K |
| Short Circuit Proof | | Yes, unless stated otherwise |
| Frequency Range | *Type 9001* | 100kHz @ $I_{\infty}$ > 50mA<br>50kHz @ $I_{\infty} \leq$ 50mA |
| | *Type 9002* | 100kHz @ $I_{\infty}$ > 50mA<br>50kHz @ $I_{\infty} \leq$ 50mA |
| | *Type 9004* | 10kHz |
| Grounding Method | | Through mounting platform (NS35/15). |

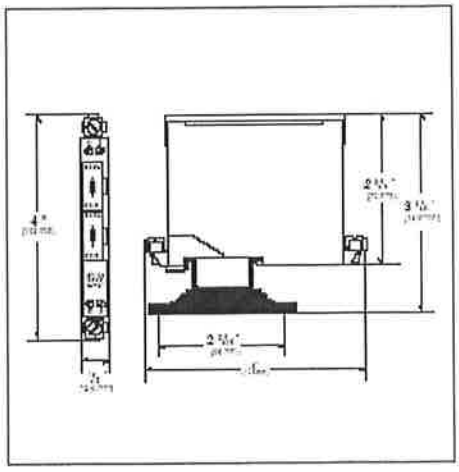

Dimensions of the Series 9000 INTRINSPAK intrinsic safety barrier. All types share a common 1/2" wide housing.

## Environmental Specifications

| | |
|---|---|
| Vibration Frequency | 55Hz |
| Vibration Amplitude | ± 0.2" (± 5mm) |
| Shock Resistance | 20g |
| Operating Temp. Range | -4° to +140°F (-20°C to +60°C) |
| Storage Temp. Range | -40° to +167°F (-40°C to +75°C) |
| Relative Humidity Range | To 95%, no condensation |

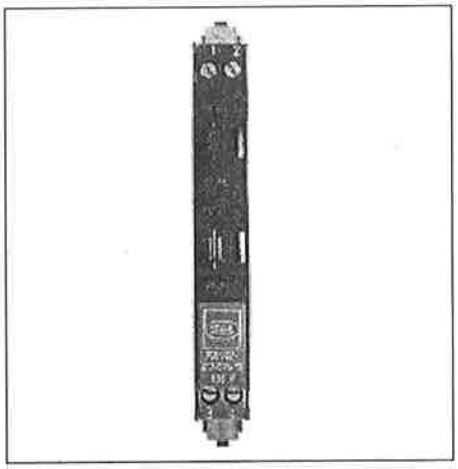

Top view of safety barrier showing screw terminal connections for both safe and hazardous area terminations. The replaceable fuses are contained in recessed compartments and are interchangeable with all Series 9000 INTRINSPAK.

## Mechanical Specifications

| | |
|---|---|
| Mounting Method | NS35/15 DIN Rail (Standard)<br>Surface Mount (with adaptor) |
| Mounting Location | Nonhazardous or Class I, Div. 2 location |
| Mounting Orientation | any |
| Housing Material | Polyamide |
| Degree of Protection | IP40 to IEC 529 |
| Flame Resistance Rating | HB to UL94 |
| Weight | 0.22 lbs. (100grams) |
| Screw Terminal Size | Four #14 AWG (1.5mm²) captured, self-opening<br>Two #12 AWG ( 4.0 mm² ) for ground and shield |

## Test Certificates

| | FM | UL | CSA | CENELEC |
|---|---|---|---|---|
| Type 9001 | J.I. 3T9A1.AX | E 81680 | LR43394 | Ex-91.C.2046X |
| Type 9002 | J.I. 3T9A2.AX | E 81680 | LR43394 | Ex-91.C.2045X |
| Type 9004 | J.I. 3T9A3.AX | E 81680 | LR43394 | Ex-92.C.2013X |

*Contact R. STAHL for other agency approval status, i.e. SA, MSHA, JIS, CIS.*

9001/01 Positive Potential DC

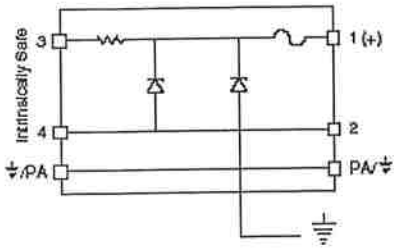


9001/00 Negative Potential DC

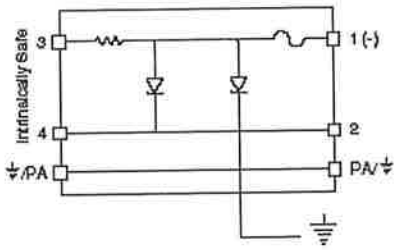


| Part Number | Operational Specifications | | | | Safety Parameters to FM 3610 Standard | | | | |
|---|---|---|---|---|---|---|---|---|---|
| | Channel Number | Voltage Range (V) | Internal Resistance (Ω) | Short-circuit Proof @ Rated Voltage | I.S. Connections for Class I, II, III | Open Circuit Voltage $V_{oc}$ (V) | Short Circuit Current $I_{sc}$ (mA) | Max. Power Transfer $P_T$ (W) | Allowed Capac. A, B $C_a$ (µF) |
| 9001/a-199-010-10 | 1 | 16...18 | 2220 | yes | A-G | 19.9 | 9.1 | 0.045 | 0.34 |
| 9001/a-199-020-10 | 1 | 16...18 | 1218 | yes | A-G | 19.9 | 16.6 | 0.082 | 0.34 |
| 9001/a-199-038-10 | 1 | 16...18 | 570 | yes | A-G | 19.9 | 37.4 | 0.186 | 0.34 |
| 9001/a-199-050-10 | 1 | 16...18 | 440 | yes | A-G | 19.9 | 48.7 | 0.242 | 0.34 |
| 9001/a-199-100-10 | 1 | 16...18 | 230 | yes | A-G | 19.9 | 95.2 | 0.473 | 0.34 |
| 9001/a-199-150-10 | 1 | 16...18 | 160 | yes | A-G | 19.9 | 139.6 | 0.694 | 0.34 |
| 9001/a-199-270-10 | 1 | 16...18 | 90 + 0.7V | yes | A-G | 19.9 | 268.8 | 1.33 | 0.34 |
| 9001/a-199-390-10 | 1 | 16...18 | 67 + 0.7V | yes | C-G | 19.9 | 382.7 | 1.89 | ---- |
| 9001/a-252-070-10 | 1 | 20...22 | 400 | yes | A-G | 25.2 | 68.0 | 0.428 | 0.18 |
| 9001/a-280-020-10 | 1 | 24...26 | 1510 | yes | A-G | 28.0 | 19.6 | 0.137 | 0.14 |
| 9001/a-280-050-10 | 1 | 24...26 | 630 | yes | A-G | 28.0 | 47.5 | 0.332 | 0.14 |
| 9001/a-280-075-10 | 1 | 24...26 | 440 | yes | A-G | 28.0 | 68.5 | 0.479 | 0.14 |
| 9001/a-280-085-10 | 1 | 24...26 | 356 | yes | A-G | 28.0 | 84.1 | 0.588 | 0.14 |
| 9001/a-280-100-10 | 1 | 24...26 | 302 | yes | A-G | 28.0 | 100.0 | 0.70 | 0.14 |
| 9001/a-280-110-10 | 1 | 24...26 | 277 | yes | A-G | 28.0 | 109.1 | 0.763 | 0.14 |
| 9001/a-280-165-10 | 1 | 24...26 | 187 | yes | C-G | 28.0 | 163.7 | 1.14 | ---- |
| 9001/a-280-280-10 | 1 | 24...26 | 124 + 0.7V | yes | C-G | 28.0 | 267.8 | 1.87 | ---- |
| 9001/a-398-050-10 | 1 | 36...38 | 920 | yes | A-G | 39.9 | 46.2 | 0.460 | 0.07 |

NOTE: Where a = 00 for negative potential DC, 01 for positive potential DC

9001/01-199-270-10 Positive Potential DC
9001/01-199-390-10 Positive Potential DC
9001/01-280-280-10 Positive Potential DC

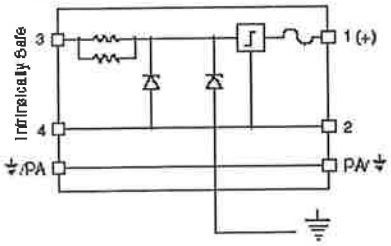


9001/00-199-270-10 Negative Potential DC
9001/00-199-390-10 Negative Potential DC
9001/00-280-280-10 Negative Potential DC

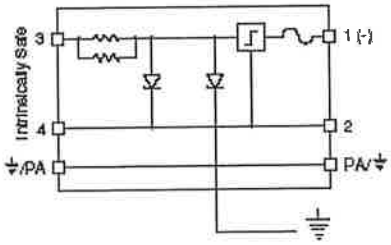


| FM 3610 Standard | | | | | CSA C22.2 No.157 | | CENELEC EN50 020 | | | | | | |
|---|---|---|---|---|---|---|---|---|---|---|---|---|---|
| Allowed Capac. C, E $C_a$ (µF) | Allowed Capac. D, F, G $C_a$ (µF) | Allowed Induct. A, B $L_a$ (mH) | Allowed Induct. C, E $L_a$ (mH) | Allowed Induct. D, F, G $L_a$ (mH) | Open Circuit Voltage $V_{oc}$ (V) | Minimum Resistance $R_{Min}$ (Ω) | Max. Power Transfer $P_T$ (W) | Open Circuit Voltage $U_Z$ (V) | Short Circuit Current $I_M$ (mA) | Allowed Capac. IIC $C_a$ (µF) | Allowed Capac. IIB $C_a$ (µF) | Allowed Induc. IIC $L_a$ (mH) | Allowed Induc. IIB $L_a$ (mH) |
| 1.00 | 2.70 | 382.2 | 1000 | 1000 | 19.9 | 2210 | 0.045 | 19.9 | 10 | 0.2 | 1 | 330 | 1000 |
| 1.00 | 2.70 | 117.9 | 421 | 1000 | 19.9 | 1210 | 0.082 | 19.9 | 20 | 0.2 | 1 | 90 | 330 |
| 1.00 | 2.70 | 24.2 | 90.0 | 201 | 19.9 | 560 | 0.186 | 19.9 | 38 | 0.2 | 1 | 23 | 87 |
| 1.00 | 2.70 | 14.4 | 54.4 | 119.0 | 19.9 | 430 | 0.242 | 19.9 | 50 | 0.2 | 1 | 15 | 56 |
| 1.00 | 2.70 | 3.90 | 15.2 | 31.4 | 19.9 | 220 | 0.473 | 19.9 | 100 | 0.2 | 1 | 4 | 15 |
| 1.00 | 2.70 | 1.60 | 7.3 | 14.6 | 19.9 | 150 | 0.694 | 19.9 | 150 | 0.2 | 1 | 1.3 | 7 |
| 1.03 | 2.76 | 0.23 | 2.1 | 4.0 | 19.9 | 77.6 | 1.33 | 19.9 | 270 | 0.2 | 1.0 | 0.23 | 2.2 |
| 1.03 | 2.76 | ----- | 0.9 | 2.0 | 19.8 | 54.5 | 1.89 | 19.9 | 390 | ----- | 1.0 | ----- | 0.8 |
| 0.55 | 1.50 | 7.50 | 28.9 | 61.3 | 25.2 | 390 | 0.428 | 25.2 | 70 | 0.09 | 0.58 | 7.5 | 28 |
| 0.43 | 1.14 | 85.0 | 306 | 725 | 28.0 | 1500 | 0.137 | 28 | 20 | 0.07 | 0.5 | 90 | 330 |
| 0.43 | 1.14 | 15.1 | 57.0 | 125 | 28.0 | 620 | 0.332 | 28 | 50 | 0.07 | 0.5 | 15 | 56 |
| 0.43 | 1.14 | 7.40 | 28.4 | 60.4 | 28.0 | 430 | 0.479 | 28 | 75 | 0.07 | 0.5 | 6.7 | 25 |
| 0.43 | 1.14 | 5.00 | 19.3 | 40.2 | 28.0 | 349 | 0.588 | 28 | 85 | 0.07 | 0.5 | 5.5 | 20 |
| 0.43 | 1.14 | 3.60 | 13.9 | 28.5 | 28.0 | 300 | 0.70 | 28 | 100 | 0.07 | 0.5 | 4 | 15 |
| 0.43 | 1.14 | 3.00 | 11.7 | 23.9 | 28.0 | 270 | 0.763 | 28 | 110 | 0.07 | 0.5 | 3 | 12 |
| 0.43 | 1.14 | ----- | 5.40 | 10.7 | 28.0 | 180 | 1.14 | 28 | 165 | ----- | 0.5 | ----- | 5.5 |
| 0.43 | 1.14 | ----- | 2.1 | 4.0 | 28.0 | 110 | 1.87 | 28 | 280 | ----- | 0.5 | ----- | 2.0 |
| 0.20 | 0.52 | 16.0 | 60.3 | 132.6 | 39.9 | 910 | 0.460 | 39.8 | 50 | 0.03 | 0.26 | 15 | 56 |

# MODEL 4042

# Liquid Level Controller

- Level simulator control
- Pressure transducer socket
- Output voltage for probe supply
- 4 adjustable setpoints with relay outputs
- LCD level display with zero and span adjustments

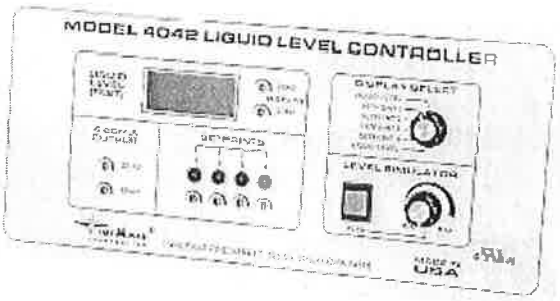


## DESCRIPTION

The Model 4042 Liquid Level Controller monitors, displays and controls water level up to 34.6 feet, in a tank or reservoir.

The Model 4042 operates from the 4-20*ma* input signal provided by the Time Mark Model 450 Pressure Transducer. This 4-20*ma* signal represents the water level to be controlled, where 4*ma* equals zero feet, and 20*ma* equals 34.6 feet. A liquid crystal display (LCD) is provided to show the water level during normal operation, and the setpoint values during calibration.

There are four user-adjustable trip setpoints. As the water level rises above each trip point setting, the front panel LED for that level illuminates, and the corresponding output relay energizes.

A 4-20*ma* output, which tracks the 4-20*ma* input, is also provided. This signal output can be re-scaled to different ranges of level by the user. A test control, that simulates an input signal, is available on the front panel. The test control is useful for checking the trip setpoints, and overall system operation.

## SPECIFICATIONS

| MODEL | 4042 |
|---|---|
| Input voltage | 120vac, ± 10% |
| Power consumption | 6 watts maximum |
| Signal input | 4-20*ma* (optional 0-5v), 2 or 3 wire |
| Signal input load | 250Ω maximum |
| Dead band | 1% of full scale |
| Repeat accuracy | ± 1% of scaled maximum (fixed conditions) |
| Display type | 3-1/2 digit liquid crystal display |
| Display range | 00.0 to 34.6 w/4-20*ma* input (factory set; user-adjustable) |
| Display resolution | 1 decimal place (factory set; user-adjustable) |
| Contacts | 4 SPDT |
| Contact rating | 10A at 240vac resistive<br>4A at 120vac inductive |
| Signal output | Output is factory set to track the 4-20*ma* input. zero and span adjustments are provided: as little as a 2*ma* change can cause a full swing of the output |
| Signal output load | 300Ω maximum |
| Probe supply voltage | 24vdc regulated |
| Trip levels | 4 setpoints, user-adjustable |
| Operating temperature | +14° to +122° F |
| Humidity tolerance | 0-97% w/o condensation |
| Enclosure material | front panel - 18 gauge steel<br>rear panel - 20 gauge steel |
| Termination | removable terminal strips |
| Weight | 5.5 pounds |
| Agency Approvals | UL Recognized (U.S. & Canadian) |

## DIMENSIONS

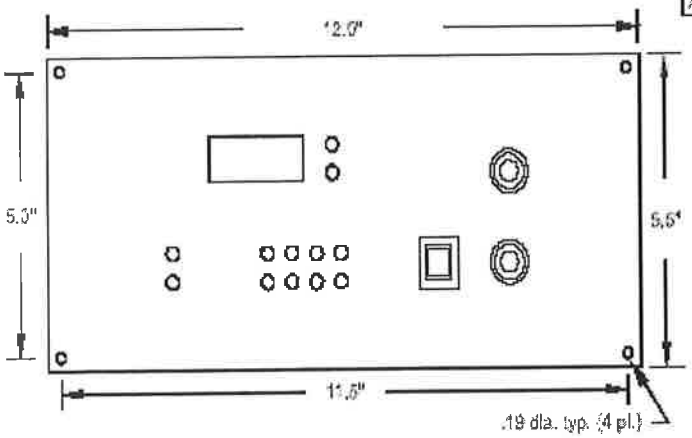


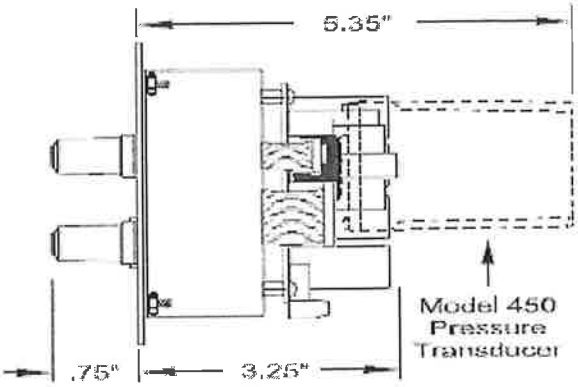

READ ALL INSTRUCTIONS BEFORE INSTALLING, OPERATING OR SERVICING THIS DEVICE.
KEEP THIS DATA SHEET FOR FUTURE REFERENCE.

## GENERAL SAFETY

**POTENTIALLY HAZARDOUS VOLTAGES ARE PRESENT AT THE TERMINALS OF THE MODEL 4042.**
**ALL ELECTRICAL POWER SHOULD BE REMOVED WHEN CONNECTING OR DISCONNECTING WIRING.**
**DO NOT EXCEED THE OUTPUT OR INPUT RATINGS, AS STATED IN THE SPECIFICATIONS.**
**PROTECT THE UNIT WITH PROPERLY RATED FUSES.**
**DO NOT INSTALL IN DAMP OR MOIST AREAS.**
**THIS DEVICE SHOULD BE INSTALLED AND SERVICED BY QUALIFIED PERSONNEL.**

# Installation Instructions

## Front Panel Controls

*figure 1*

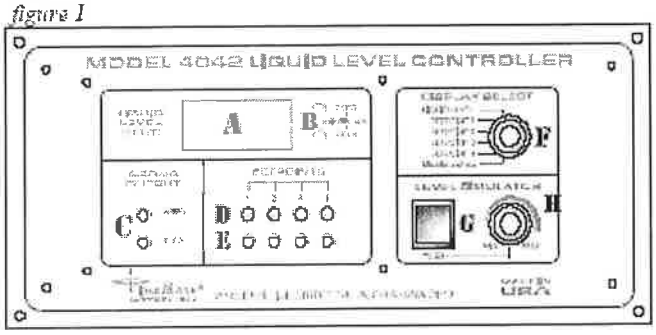


A 3-1/2 DIGIT LCD INDICATOR - SHOWS LIQUID LEVEL IN FEET

B ZERO AND SPAN ADJUSTMENTS FOR THE DISPLAY

C ZERO AND SPAN ADJUSTMENTS FOR 4-20ma OUTPUT SIGNAL

D INDICATOR LEDs - SHOW WHEN SETPOINT IS REACHED (ONE PER SETPOINT)

E SETPOINT ADJUSTMENT POTENTIOMETERS

F DISPLAY SELECT SWITCH - USED TO DISPLAY LIQUID LEVEL OR TRIP POINT SETTINGS

G PUSH BUTTON - ENABLES SIMULATED LEVEL CHANGE

H SIMULATES LIQUID LEVEL CHANGE (WITH OR WITHOUT INPUT SIGNAL) WHEN BUTTON G IS PRESSED. THE 4-20ma OUTPUT IS ALSO AFFECTED.

*figure 2 (rear view of board)*

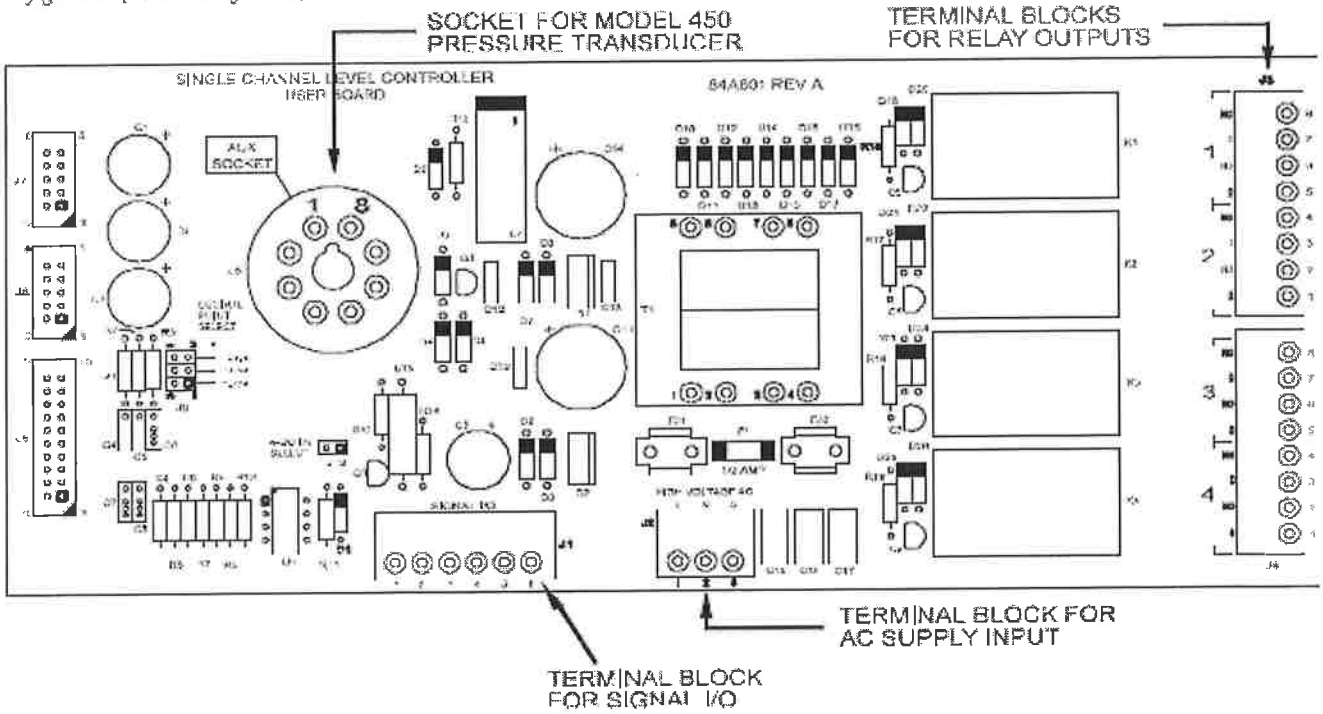

## Mounting & Wiring

Mount the **Model 4042 Liquid Level Controller** in a suitable enclosure.

Referring to the terminal block decals on the unit, and in *figure 2*, make the following connections:

OPERATING POWER - Terminal Block J2 (AC POWER IN)

Connect a chassis ground to the terminal marked G. Connect 120vac operating power to terminals marked 'L' (line) and 'N' (neutral).

SIGNAL INPUT - Terminal Block J1

With a **Model 450 Pressure Transducer plugged into the AUX SOCKET** on the back of the Model 4042, the 4-20*ma* input terminals are not used. External wiring connections are not required.

With a **Model 450 Pressure Transducer remotely mounted** *(figure 3 below )*, connect the +24VDC OUT terminals to the voltage input of the Model 450. Connect the 4-20*ma* IN terminals to the loop terminals of the Model 450. Observe polarity of the connections ("+" to 4-20*ma*, "—" to GND).

*figure 3*

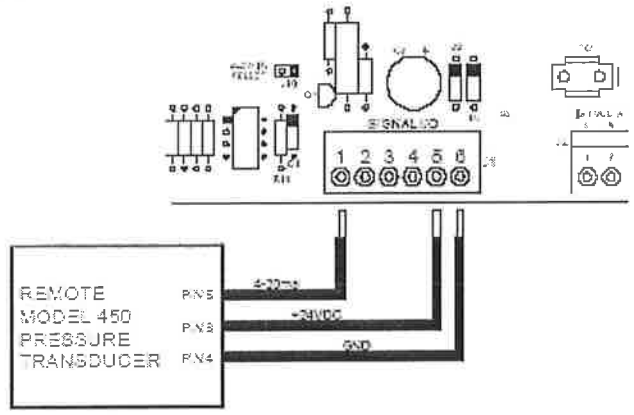


### Advanced Procedures

If you use a 24vdc 2-wire transducer (pressure, ultra-sonic, etc.) connect it between the '+' terminal of the +24vdc OUT and the '+' terminal of the 4-20*ma* IN, see *figure 4*.

SIGNAL OUTPUT - Terminal Block J1

The 4-20*ma* OUT terminals may be connected to a remote monitoring loop, a remote display, or for other purposes. Connect these terminals as required for your application. Observe polarity of the connections.

*figure 4*

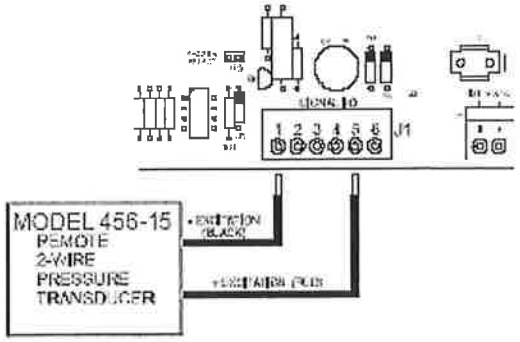


RELAY OUTPUTS - Terminal Blocks J3 and J4

SPDT contacts are provided for each of the four setpoints. These relay contacts can be used to control pump motors, alarm circuits, or as inputs to a Model 403 Liquid Level Controller. Make wiring connections, as required.

DISPLAY RESOLUTION

The Model 4042 is factory set to display liquid level to one decimal place (i.e.,123.4). This default should be acceptable for most applications.

### Advanced Adjustments

If the application requires, the number of decimal places can be changed to zero, two or three places by moving a jumper (J9), on the pc board of the controller *(figure 5)*. For '0' decimal places, remove the jumper *(store the jumper connector on a single pin, so it doesn't get lost)*.

*figure 5*

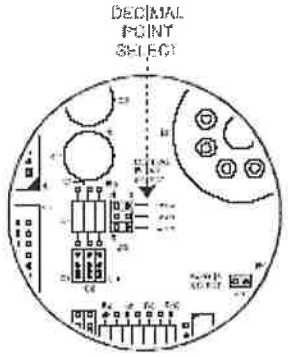


TRANSDUCER CONNECTION

Connect the 3/16" i.d. tubing to the INPUT air supply fitting on the Model 450 Pressure Transducer. Connect the other end of the tubing to the air compressor, at the tank or well. There should be no connection to the REFERENCE input on the Model 450.

Apply operating power to the Model 4042 Controller, and proceed to make the calibration adjustments.

## Display ZERO and SPAN Adjustments

For most applications, these controls do not need to be adjusted. The Model 4042 will display any range from 00.0 to 34.6 feet of depth, and is factory set for this range (i.e., 4*ma* equals 00.0 feet, and 20*ma* equals 34.6 feet). For levels less than 34.6 feet, the display will still show the correct level.

### Advanced Adjustments

*If your Model 4042 Controller application does not require any adjustments to the factory setting described above, skip this section and go on to the 4-20ma* ***Output Zero & Span*** *Adjustments section.*

If it is necessary to make adjustments, for other transducers, or for liquids other than water, the Model 4042 Controller has a wide display range (-600 to 1999).

If you are monitoring a 20 foot level, the Model 4042 will show 20.0 feet, with an input of approximately 12*ma*. With a different transducer, however, it will be necessary to re-calibrate the display to accurately show the correct depth. If care is taken, accuracy of 1% or better is possible. An accurate 4-20*ma* source is required.

Before going on with the adjustment procedures, several critical areas must be thoroughly understood. At this point in the instructions, decimal points will be ignored *(until you know the possible resolution, you won't know where to set the decimal selector).*

First, the largest number possible on the LCD display is 1999 (the left most digit will only show a "1" or a blank).

Second, the difference between the minimum and maximum values to be displayed is the **span**. The Model 4042 Controller has a span range of 250 to 2600 counts. The difference between your minimum and maximum values must fall within this range; i.e. your application's span must be at least 250 count, but not over 2600 counts. Once you have this information, you can determine how many decimal places to select. The following are some examples:

1. You use a transducer with a 20*ma* output equaling 15 feet of liquid. The difference between 0 and 15, is 15 counts, well below the minimum of 250 counts. Add a zero to each number; now the span is 150 counts, still below the minimum. Add another zero, and you now have a span of 1500 counts, well within the span range. Now, you can see that the decimal must be set for two places,for a resolution of 1/100th of a foot, or 15.00.
2. You use a transducer with a 20*ma* output equaling 25 feet. The span is only 25, so a zero is added to the count. The span is now 250, which meets the minimum span. Select one decimal place (25.0). Notice that adding another zero gives you a count of 2500, which also falls within the span range; however, you cannot place the decimal at two places (25.00) because the LCD display can only show up to 1999 (19.99).
3. You use a transducer with a 20*ma* output equaling 20 feet. The span is 20, so you must add a zero. A span of 200 still does not meet the minimum of 250, so add another zero for a span of 2000. This falls within the acceptable span range; however, as stated above, the maximum LCD display is 1999. Therefore, the decimal selector must be set to two places, or 19.99. This means that your display will be short of 20 feet by 1/100th of a foot, which should be sufficient in most any application.

Now let's look at the actual adjustment procedure.

The DISPLAY ZERO control sets the lowest number you want the LCD display to read. This number will be displayed when the transducer input is at 4*ma*. While usually zero *(the factory default)*, this number can be as low as -600, or as high as 1749.

The DISPLAY SPAN control sets the highest number you want the display to read. This number will be displayed when the transducer input is 20*ma*. This number is factory set to 34.6, but can be set as high as 1999, or as low as -350 *(assuming a one decimal place display setting)*.

Application example: Display level in a 5 foot tank, when 4*ma* equal 0 feet, and 20*ma* equals 5 feet.

1. Using methods previously described in this section, the span is determined to be 500. Set the decimal selector to two places, for a resolution of 5.00.
2. Set the DISPLAY SELECT knob to LIQUID LEVEL (either position).
3. Apply a 4*ma* signal to the input. Adjust the DISPLAY ZERO control for a 0.00 reading.
4. Apply a 20*ma* signal to the input. Adjust the DISPLAY SPAN control for a 5.00 reading.
5. Repeat steps 3 and 4 as needed to fine-adjust the display reading. It may be necessary to repeat the steps several times to achieve maximum accuracy.

## 4-20ma ZERO & SPAN Adjustments

The 4-20*ma* output is proportional to, and independent from, the input signal. This allows for very accurate remote monitoring of level changes. The factory default is for the output to track the input; that is, a 4*ma* signal represents 00.0 feet, and a 20*ma* signal represents 34.6 feet. However, the output can be zeroed and spanned to a specific range, not necessarily the same as the reading on the LCD display *(see Advanced Adjustments)*.

### Advanced Adjustments

*If your Model 4042 Controller application does not require any adjustments to the factory settings described above, skip this section and go on to the Setpoint Adjustments section.*

The 4-20*ma* output can be zeroed and spanned to a specific range, not necessarily the same as the reading on the LCD display. As an example; with the default input setting (00.0 to 34.6), a 2*ma* input variation can be expanded to a full 20*ma* output variation. The maximum allowable output current is 30*ma*. An accurate 4-20*ma* source, and a multimeter (digital for highest accuracy), are required to adjust this setting.

***CAUTION: The output can go HIGHER THAN 30ma, but doing so WILL DAMAGE THE CONTROLLER. Care must be taken to limit the output to the 30ma maximum.***

To make adjustments to the default ZERO and SPAN output:

1. Connect the multimeter to the "+" and "-" 4-20*ma* output terminals. Set the multimeter to read DC current.
2. Apply a 4*ma* current to the transducer input terminals, and adjust the 4-20*ma* output ZERO CONTROL until the desired minimum output current is shown on the multimeter.
3. Change the 4*ma* input current to 20*ma*, and adjust the 4-20*ma* SPAN CONTROL until the desired maximum output current is displayed on the multimeter.

**NOTE:** If the maximum current is within the 0-30*ma* range, but cannot be reached, the 4-20*ma* SPAN CONTROL is probably out of range. If this is the case, adjust the current as close as possible, and move on to the next step.

4. Repeat steps 2 and 3 until adjustment is no longer necessary.

**NOTE:** It will typically take four to six passes through steps 2 and 3 to complete adjustment. Each pass will get you closer to the final output current.

## SETPOINT Adjustments

The four setpoints are independently set using adjustment pots *(**E** on figure 1)* on the front panel of the Model 4042 Controller. Adjustment results are shown on the LCD display.

In operation, as the liquid level reaches a setpoint, the corresponding LED indicator will illuminate, and it's relay will energize. The setpoints match the display range; i.e., if the display is changed to read to two decimal places, the setpoint will also be displayed to two decimal places.

1. To adjust the first setpoint, turn the DISPLAY SELECT knob *(**F** on figure 1)* to SETPOINT 1, and adjust the pot for the desired setting, by watching the LCD display.
2. Repeat step 1 for each of the three additional setpoints.
3. Set the DISPLAY SELECT knob to either LIQUID LEVEL position. The Model 4042 Controller is now ready for operation.

## LEVEL SIMULATOR

For testing purposes, a push button *(**G** on figure 1)*, and the MIN-MAX adjustment knob *(**H** on figure 1)* are provided.

With no input signal applied, set the adjustment to MIN, then press and hold the push button. As the adjustment is turned clockwise (to MAX), the LCD display will show an increasing *(simulated)* liquid level.

As each setpoint is reached, the appropriate LED indicator *(**D** on figure 1)* will illuminate and the output should activate; i.e., pump will come on, output relay will energize, or alarm will sound. Releasing the push button returns the Model 4042 Controller to it's active mode.

**NOTE:** The LEVEL SIMULATOR adjustment has a range greater than 4-20*ma*, which can result in a negative reading at the MIN setting.

### Troubleshooting

These units are not field repairable. **Should the Model 4042 not operate properly during the adjustment or testing procedures**, insure that all electrical and air pressure connections are correct. Verify that the proper supply voltage is applied, and check all fuses. Negative display readings may indicate that the 4-20*ma* input signal is missing or is less than the 4*ma* minimum. If everything is correct, and the device still fails to operate, contact the factory at **800-862-2875** *(Mon-Fri; 8 a.m. to 5 p.m. CST)*. **Should a device fail during use**, contact the factory at **800-862-2875** *(Mon-Fri; 8 a.m. to 5 p.m. CST)*, for instructions on returning it for repair.

## TYPICAL APPLICATION

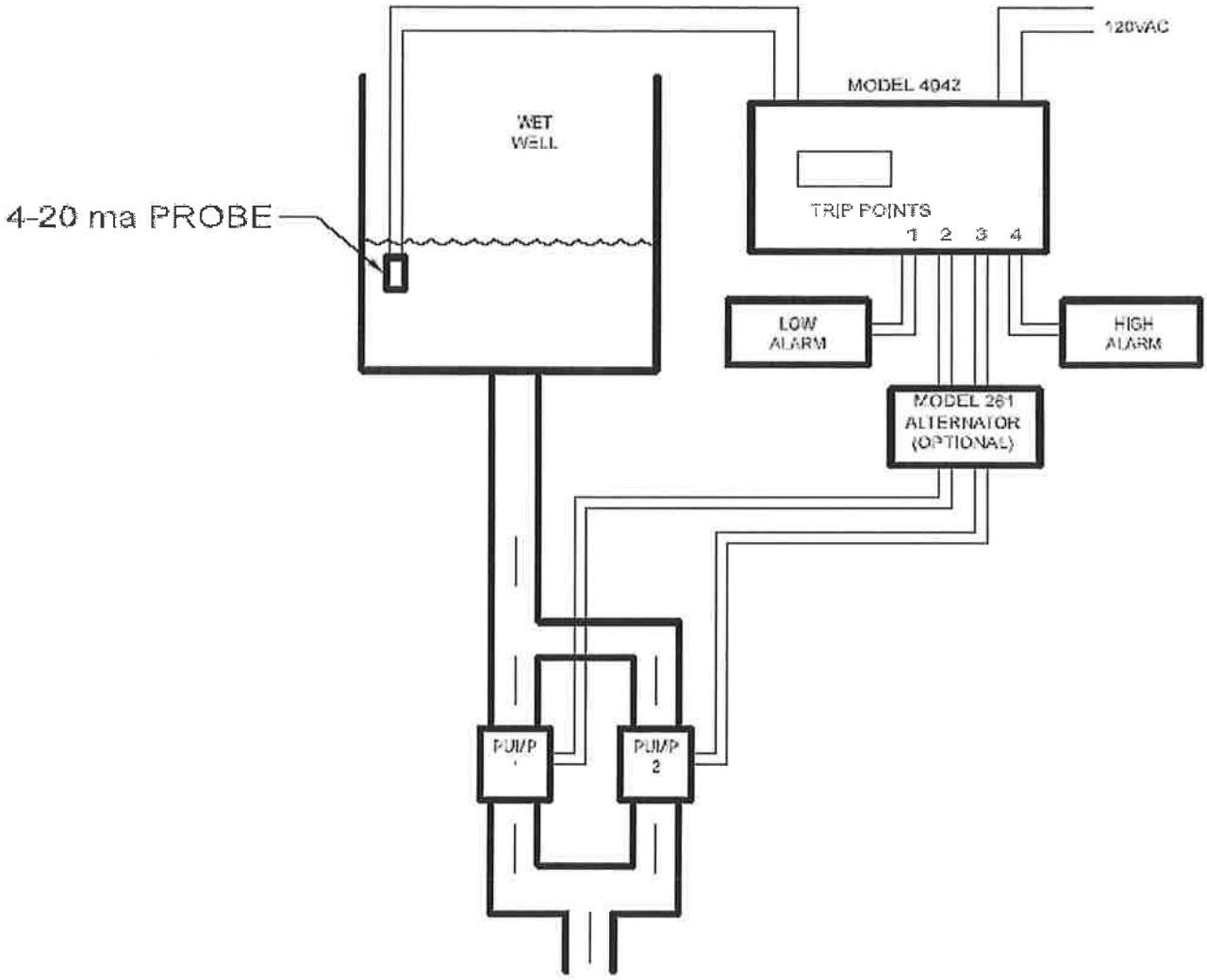


## WARRANTY

The **Model 4042 Liquid Level Controller** is warranted to be free from defects in materials and workmanship for one year. Should this device fail to operate, we will repair or replace for one year from the date of purchase. Contact the Time Mark Sales department, Monday-Friday, 8 a.m. to 5 p.m. CST, for further details.

Ground Fault Products

# 2 Pole 3 Wire Grounding

*15 and 20 Ampere, 120 Volt AC*

**Straight Blade Commercial Specification Grade and Commercial Hospital Grade GFCI Duplex Receptacles**

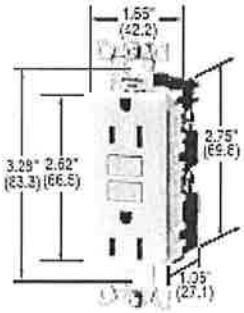


GFR5252I

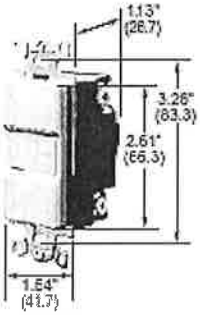


GF5350IA

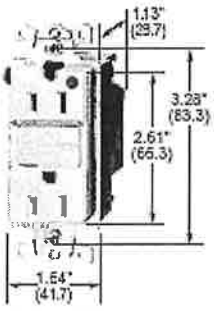


HGF8200I

## Circuit Guard®
## Commercial Specification Grade
## GFCI Duplex Receptacles

NEMA 5-15R
15A 125V
UL CSA

NEMA 5-20R
20A 125V
UL CSA

| Description | Color | Catalog Numbers | |
|---|---|---|---|
| Flush, nylon face, back & side wired, multiple drive screws. | Brown | GFR5252 | GFR5352 |
| | Ivory | GFR5252I | GFR5352I |
| | Gray | GFR5252GY | GFR5352GY |
| | White | GFR5252W | GFR5352W |
| | Black | GFR5252BK | GFR5352BK |
| | Office White | GFR5252OW | GFR5352OW |
| | Red | GFR5252R | GFR5352R |

## Circuit Guard Faceless GFCI

| Description | Color | Catalog Number | |
|---|---|---|---|
| Faceless, side wired, slotted screws. | Ivory | — | GF5350IA |

## Circuit Guard
## Commercial Hospital Grade
## GFCI Duplex Receptacles

| Description | Color | Catalog Numbers | |
|---|---|---|---|
| Flush, nylon face, side wired, slotted screws. | Brown | GF8200H | GF8300H |
| | Ivory | GF8200HI | GF8300HI |
| | Gray | GF8200HGY | GF8300HGY |
| | Red | GF8200HR | GF8300HR |
| | White | GF8200HW | GF8300HW |

*Note: GFCI type receptacles should not be used in critical care patient areas or for electrical life support equipment applications because of the possibility of power interruption.*
*All GFCI receptacles listed above include matching nylon wallplates.*

| Specifications | |
|---|---|
| Trip Level | 4 to 6 mA. |
| Trip Time | .025 sec. nominal. |
| Frequency | 60 Hz. |
| Voltage | 120V AC +10% - 15%. |
| Maximum Interrupting Capacity | 2000A. |
| Operating Temperature | -35°C to +66°C or -30°F to +150°F. |
| Maximum Humidity | 95%. |
| Listings & Standards | Meets UL 498 for receptacles, UL 943 Class A for GFCIs UL File E41978. CSA Certified. |
| Codes | Meets all 2002 NEC requirements. |

ARCADIS SUBMITTAL # CD-035-R1

# ARCADIS US, INC
# SUBMITTAL FORM

To Mr. Matthew Bowman, Construction Manager
Arcadis Us, Inc
251 E. Ohio Street, Suite 800
Indianapolis, IN 46204

Submittal No. 315100-05-A
Date of Submittal: August 25, 2011
Contractor: Weeks
Contract No.: B0009966.001
Subject of Submittal: ~~Tie Back Location~~ STIFFENER LOCATION ALONG WALES

Specification No. 31 51 00 Par. No. N/A
Drawing No. N/A

WE ARE SENDING YOU ATTACHED THE FOLLOWING: (Indicate All Applicable Items)

- [ ] Shop Drawings
- [ ] Progress Schedules
- [ ] Testing Procedure
- [X] First Submission
- [ ] Third Submission
- [ ] Sample
- [ ] O&M Manual
- [ ] Contact List
- [ ] Second Submission
- [ ] _____ Submission

| DESCRIPTION (Itemize All Components) | NO. OF COPIES |
|---|---|
| ~~Tie Back Location~~ STIFFENER LOCATION ALONG WALES | 1 |

REVIEWED & NOTED
REVIEWED
REVIEWED SOLELY FOR GENERAL COMPLIANCE WITH CONTRACT DOCUMENTS
ARCADIS
SIGNATURE
Office Location TOL
Date 8/29/2011
REJECTED
RESUBMIT

Complete either (a) or (b) and ©, in the case of technical Submittals or Progress Schedule Submittals:

a (X ) The Contractor verified that the material, equipment, or other item contained in this Submittal meets all the requirements specified, shown,, or indicated in the Contract Documents with no exceptions.

b ( ) The Contractor has verified that the material, equipment, or other item contained in this Submittal meets all requirements specified, shown, or indicated in the Contract Documents except for variances identified in the following attached documents:

c ( ) The Contractor has stamped or written its approval on each Shop Drawing sheet, or cover sheet in the case of other Submittals, certifying that the Contractor has satisfied its responsibilities with respect to the review of the submission including, but not limited to, the requirements of Article 6 of the General Conditions.

Signed (By the Contractor): Claude Dion

Claude Dion

**CD-035-R1**

**REVIEWED & NOTED:**

As indicated in the specifications, it is Week's responsibility to confirm that the horizontal offset shall avoid extraction wells and piezometers by a minimum of 5-ft.

Submittal 315100–05-A "New Tie Rod Lateral Adjustment"

WMI intends to offset the new Tie-Backs from 0" to a maximum of 5" laterally from their design location to avoid sheet pile drilling obstructions.

Based on discussions (Emails sent Wednesday August 24th and Thursday August 25th) between WMI and Arcadis Engineers, the HSS 8x4x3/8 members will be adjusted with the shifted tie-backs. However, the stiffeners located in the W16x77 will not be adjusted and will remain in their original location.

Please indicate the above information has be reviewed and approved.

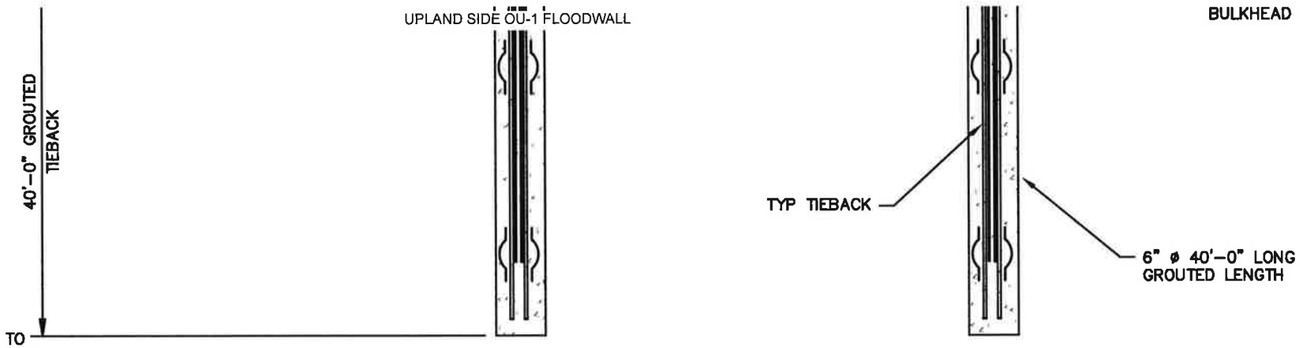


## PLAN AT TYPICAL TIEBACK (3)

SCALE: ½"=1'-0"

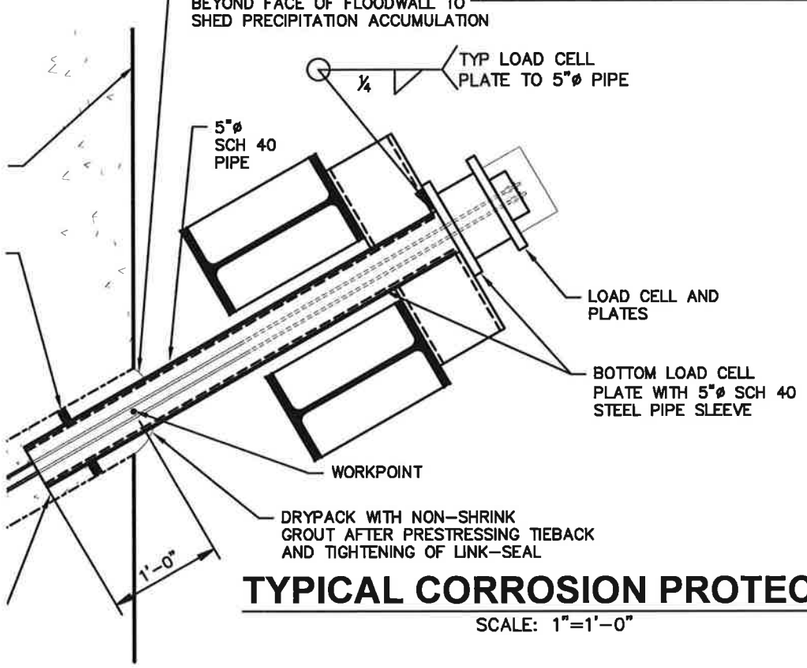


## TYPICAL CORROSION PROTECTION (4)

SCALE: 1"=1'-0"

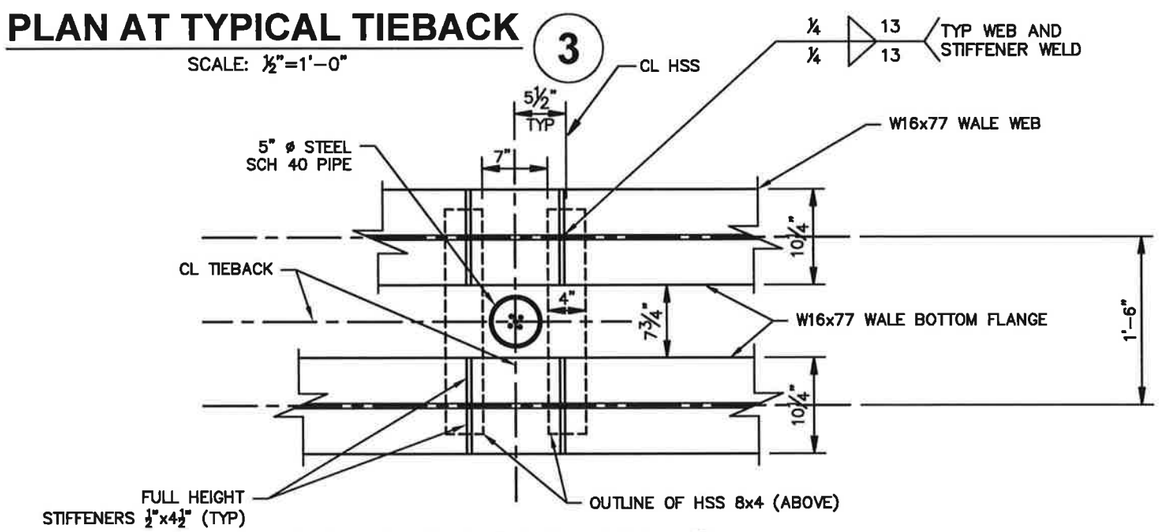


## WALE STIFFENERS (5)

SCALE: 1"=1'-0"

ARCADIS

ARCADIS U.S., INC.
NEW JERSEY ENGINEERING CERTIFICATE OF AUTHORIZATION NUMBER 24GA27939600

TIERRA SOLUTIONS, INC. • LOWER PASSAIC RIVER, NEWARK, NJ
PHASE I CERCLA NON-TIME-CRITICAL REMOVAL ACTION

# TIEBACK PLANS AND SECTIONS

STRUCTURAL

ARCADIS Project No.
B0009964.0001

Date
AUGUST 2011

ARCADIS
6723 TOWPATH ROAD
BOX 66
SYRACUSE, NY 13214
TEL: 315.446.9120

S-17

ARCADIS SUBMITTAL # CD-067-R1

CleanHarbors
ENVIRONMENTAL SERVICES®

42 Longwater Drive, Norwell, MA 02061
(781) 385-9813
Lis.Justin@cleanharbors.com
www.cleanharbors.com

# Project Submittal

**Project Name:** Lower Passaic River Phase I Sediment Removal Action

February 9, 2012

**Engineer:** Rob Romagnoli, (QCA) Engineer of Record (ARCADIS)
**Address:** 6723 Towpath Road, Syracuse, NY 13214

**Subcontractor:**
**Address:**

**Manufacturer:** Manley Bros. of Indiana, Inc
**Address:** 300 South Vermillion Street Troy Grove, Il 61372

**Supplier:** Crown Solutions Co. LLC
**Address:** 945 South Brown School Rd, Vandalia, OH 45377

**Submittal: ML-025-R1**
**Specification/Drawing Reference:** M-18 & Spec 44 42 00 2.3

| Transmittal Record | Attention | Sent | Received | Due | Quantity | Received |
|---|---|---|---|---|---|---|
| Contractor to Engineer | Rob Romagnoli (QCA)<br>Scott Murphy (TM) | 02/09/12 | | 02/20/12 | 1 | |
| Engineer to Contractor | Justin Lis | | | | | |

**Review Action Code:** 1. Reviewed/No exception taken 2. Make correction[illegible] s noted and resubmit

X REVIEWED
☐ REVIEWED & NOTED

REVIEWED SOLELY FOR GENERAL COMPLIANCE WITH CONTRACT DOCUMENTS

ARCADIS

Robert Romagnoli

SIGNATURE

2-10-2012 SYR

Date Office Location

☐ RESUBMIT ☐ REJECTED

Clarifier Trailer - for the water

arbors will utilize the Microsand for
ite.

ttal, it is assumed that no change in
lved, notify the CM immediately.

# Material Safety Data Sheet

**Revised:**

**September 2002**

## Section 1 – Product Identification

| | |
|---|---|
| Trade Names: | Silica Sand-All Grades, Vita-S, RRW, Tip Top |
| Common Names/Synonyms: | Sand, Silica Sand, Quartz, Crystalline Silica, Flint, Ground Silica |
| Product Use: | Foundry Molds, Abrasive Blasting, Glass and Ceramic Melt Sand, Aggregate Filler, Filtration Media |
| Manufacturers Name: | Manley Bros. of Indiana, Inc |
| Manufacturers Address: | P.O. Box 80, 300 South Vermillion Street<br>Troy Grove, IL 61372 |
| Manufacturers Telephone: | (815) 539-7486 |
| Date Revised: | September 2002 |
| Emergency Number: | (815) 539-7486 (7:00 am – 4:00 pm Central Time, Monday-Friday) |

## Section 2 – Composition and Information on Ingredients

| | | |
|---|---|---|
| Hazardous Ingredient Name: | Silica, Quartz, $SiO_2$ | |
| CAS Number: | 14808 - 60- 7 | |
| Concentration (%) | >95% | |
| Exposure Limits in Air: | | |
| OSHA - PEL | 10 mg/m$^3$<br>% $SiO_2$+2 | (8-Hour Time Weighted Average) |
| ACGIH – TLV | 0.05 mg/cubic meter | (8-Hour Time Weighted Average) |
| NIOSH | 0.05 mg/cubic meter | (10-Hour Time Weighted Average, 40-hour work week) |

**Exposure Limits refer to the respirable fraction.**

Silica is classified as hazardous under Occupational Safety and Health Administration (OSHA) regulations (29 CFR 1910.1200).

**CAUTION:**
Crystalline silica exists in several forms, the most common of which is quartz. If crystalline silica (quartz) is heated to more than 870°C it can change to a form of crystalline silica known as trydimite, and if crystalline silica (quartz) is heated to more than 1470°C, it can change to a form of crystalline silica known as cristobalite. Crystalline silica as trydimite and cristobalite are more fibrogenic than crystalline silica as quartz. The OSHA PEL for crystalline silica as trydimite and cristobalite is one-half the PEL for crystalline silica (quartz); the ACGIH TLV for crystalline silica as trydimite and cristobalite is one-half the TLV for crystalline silica as quartz.

## Section 3 – Hazards Identification

**Emergency Overview**

Manley Bros. Silica Sand is a light buff to white sand with no odor. It is not flammable, combustible, or explosive. It can cause irritation to the eyes. A single exposure will not result in serious adverse health effects.

**Potential Health Effects**
Inhalation:

a. Silicosis: Respirable crystalline silica (quartz) can cause silicosis, a fibrosis (scarring) of the lungs. Silicosis may be progressive; it may lead to disability and death.

b. Cancer: Crystalline silica (quartz) inhaled from occupational sources in sufficient concentrations is classified as carcinogenic to humans. In its Ninth Annual Report on Carcinogens, the National Toxicology Program (NTP) listed crystalline silica as a known human carcinogen, based on sufficient evidence of carcinogenicity from studies in humans indicating a casual relationship between exposure to respirable crystalline silica and increased lung cancer rates in workers exposed to crystalline silica dust. The International Agency for Research on Cancer (IARC) has evaluated crystalline silica and determined that "crystalline silica inhaled in the form of quartz or cristobalite from occupational sources is carcinogenic to humans (Group 1)."

c. Scleroderma: There is evidence that exposure to respirable crystalline silica or that the disease silicosis is associated with the increased incidence of scleroderma, an autoimmune disorder manifested by a fibrosis (scarring) of the skin and internal organs.

d. Tuberculosis: Silicosis increases the risk of tuberculosis.

e. Nephrotoxicity: There are several studies suggesting that exposure to respirable crystalline silica or that the disease silicosis is associated with the increased incidence of kidney disorders.

Eye Contact: Crystalline silica (quartz) may cause abrasion of the cornea.

Skin Contact: Not applicable.

Ingestion: Not applicable.

Chronic Effects: The adverse health effects -- silicosis, cancer, scleroderma, tuberculosis, and nephrotoxicity -- are chronic effects.

Signs and Symptoms of Exposure: There are generally no signs or symptoms of exposure to crystalline silica (quartz). Often, chronic silicosis has no symptoms. The symptoms of chronic silicosis, if present, are shortness of breath, wheezing, cough and sputum production. The symptoms of acute silicosis are the same as those associated with chronic silicosis; additionally, weight loss and fever may also occur. The symptoms of scleroderma include thickening and stiffness of the skin, particularly in the fingers, shortness of breath, difficulty swallowing and joint problems.

Medical Conditions Generally Aggravated by Exposure: The condition of individuals with lung disease (e.g., bronchitis, emphysema, chronic obstructive pulmonary disease) can be aggravated by exposure.

See Section 11, Toxicological Information, for additional detail on potential adverse health effects.

## Section 4 – First Aid Procedures

Inhalation – There is no specific treatment because the health effects associated with silica are chronic. If gross inhalation of silica occurs, remove the person to fresh air, perform artificial respiration as needed, and obtain medical attention as needed.

Eye – Wash the eye with water. If irritation persists, seek medical attention.

Skin – N/A

Ingestion – If large amounts are ingested, seek medical attention.

## Section 5 – Fire Fighting Measures

| | |
|---|---|
| Flashpoint: | None |
| Upper/Lower Explosive Limit: | None (N/A) (not combustible) |
| Autoignition Temperature: | None |
| Unusual Fire and Explosion Habits: | None |
| Extinguishing Media: | Compatible with all media; use the medium appropriate to the surrounding fire. |
| Special Fire Fighting Procedures: | None with respect to this product. |
| Hazardous Combustion Products: | None |

## Section 6 – Accidental Release Measures

Wear appropriate personal protective equipment as described in Section 8 of this document. Collect the material using a method which does not produce dust [High-Efficiency Particulate Air (HEPA) vacuum or thoroughly wetting down the silica]. Place the silica in a covered container appropriate for disposal. Dispose of the silica according to federal, state, and local regulations.

## Section 7 – Handling and Storage

Do not breathe dust which may be created during the handling of this product. Do not rely on vision to determine whether respirable silica is present in the air, as it may be present without a visible cloud. Use good housekeeping procedures to prevent the accumulation of silica dust in the workplace. Avoid the creation of respirable dust.

Use adequate ventilation and dust collection equipment. Ensure that the dust collection system is adequate to reduce dust levels to below the appropriate occupational health limit.

In accordance with the U.S. Occupational Safety and Health Administration's (OSHA) Hazard Communication Standard (29 CFR 1910.1200, 1915.99, 1917.28, 1918.90, 1926.59, 1928.21), state, and/or local right-to-know laws and regulations, familiarize your employees with this MSDS and the information contained herein. Warn your employees of the potential health risks associated with the use of this product and train them in the appropriate use of personal protective equipment and engineering controls which will reduce their risks of exposure.

## Section 8 – Exposure Controls/Personal Protection

Ventilation: Use local exhaust as required to maintain exposures below the occupational exposure limits; see also ACGIH, Industrial Ventilation – Recommended Practice (latest edition).

Respiratory Protection: NIOSH recommends that workers wear the type CE supplied air abrasive blasting respirator operated in the positive-pressure mode (assigned protection factor (APF) of 2,000) during abrasive blasting operations that involve crystalline silica sand. Avoid breathing dust produced during the use and handling of this product. The following chart specifies the types of respirators which may provide respiratory protection for crystalline silica. This chart is based on the OSHA PEL, assuming that the material involved is 98% crystalline silica, therefore resulting in a PEL of 0.1 mg/m$^3$.

| CONDITION Particulate Concentration | MINIMUM RESPIRATORY PROTECTION REQUIRED TO MEET THE CONDITION OSHA PEL FOR CRYSTALLINE SILICA (0.1 mg/m$^3$) |
|---|---|
| Less than or equal to 1.0 mg/m$^3$ (10 x PEL) | • Any air-purifying respirator with a P100 filter approved by NIOSH. |
| Less than or equal to 2.5 mg/m$^3$ (25 x PEL) | • Any powered, air-purifying respirator with a P100 filter approved by NIOSH, or<br>• Any supplied-air respirator equipped with a hood or helmet and operated in a continuous-flow mode (for example, type CE abrasive blasting respirators operated in the continuous flow mode) approved by NIOSH |

| CONDITION Particulate Concentration | MINIMUM RESPIRATORY PROTECTION REQUIRED TO MEET THE CONDITION OSHA PEL FOR CRYSTALLINE SILICA (0.1 mg/m³) |
|---|---|
| Less than or equal to 5.0 mg/m³ (50 x PEL) | • Any air-purifying respirator with a P100 filter approved by NIOSH, or<br>• Any powered, air-purifying respirator with a tight-fitting facepiece and a P100 filter approved by NIOSH. |
| Less than or equal to 100 mg/m³ (1,000 x PEL) | • Any supplied-air respirator equipped with a half-mask and operated in a pressure-demand or other positive pressure mode. |
| Less than or equal to 200 mg/m³ (2000 x PEL) | • Any supplied-air respirator equipped with a half-mask and operated in a pressure-demand or other positive-pressure mode (for example, a type CE abrasive blasting respirator operated in a positive-pressure mode) |
| Planned or emergency entry into environments containing unknown concentrations or concentrations less than or equal to 1,000 mg/m³ (10,000 x PEL) | • Any self-contained breathing apparatus equipped with a full facepiece and operated in a pressure-demand or other positive-pressure mode, or<br>• Any supplied-air respirator equipped with a full facepiece and operated in a pressure-demand or other positive-pressure mode in combination with an auxiliary self-contained breathing apparatus operated in a pressure-demand or other positive-pressure mode |
| Firefighting | • Any self-contained breathing apparatus equipped with a full facepiece and operated in a pressure-demand or other positive-pressure mode approved by NIOSH |
| Escape only | • Any air-purifying respirator with a P100 filter approved by NIOSH, or<br>• Any appropriate escape-type, self-contained breathing apparatus |

See also ANSI standard Z88.2 (latest revision) "American National Standard for Respiratory Protection," 29 CFR 1910.134 and 1926.103, and 42 CFR 84.

**Permissible Exposure Levels:**

| Exposure Guidelines for Crystalline Silica | | | | | | |
|---|---|---|---|---|---|---|
| OSHA | | ACGIH | | NIOSH | | |
| TWA | STEL | TWA | STEL | TWA | STEL | Unit |
| 10 mg/m³ / % $SiO_2$+2 | None | 0.05 | None | 0.05 | None | mg/m³ |

If the workplace airborne crystalline silica concentration is unknown for a given task, conduct air monitoring to determine the appropriate level of respiratory protection. Consult with a certified industrial hygienist, your insurance risk manager, or the OSHA Consultative Services group for detailed information. Ensure appropriate respirators are worn during and following the task, including clean-up or whenever airborne dust is present, to insure ambient dust levels are below occupational health limits.

Gloves:Recommended in situations where abrasion from sand may occur.

Eye: Goggles recommended where airborne dust is produced.

Other: Protective clothing as appropriate for the work environment. Dusty clothing should be laundered before it is reused. Do not take dusty clothing home.

## Section 9 – Physical and Chemical Properties

| | |
|---|---|
| Appearance: | Light Buff to White Sand |
| Odor: | None |
| Physical State: | Granular Solid |
| pH: | Not Applicable |
| Vapor Pressure | Not Applicable |
| Vapor Density: | Not Applicable |
| Boiling Point or Range, °F: | Above 3500°F |
| Melting Point or Range, °F: | Above 2000°F |
| Solubility In Water: | Insoluble |
| Specific Gravity: | 2.65 Crystalline |

## Section 10 – Stability and Reactivity

| | |
|---|---|
| Stability: | Stable |
| Materials to Avoid: | Strong Oxidizing Agents |
| Hazardous Decomposition Products: | None |
| Hazardous Polymerization: | Will not occur |

## Section 11 – Toxicological Information

A. SILICOSIS

The major concern is silicosis (lung disease), caused by the inhalation and retention of respirable crystalline silica dust. Silicosis can exist in several forms, chronic (or ordinary), accelerated, or acute.

Chronic or Ordinary Silicosis is the most common form of silicosis, and can occur after many years of exposure to levels above the occupational exposure limits for airborne respirable crystalline silica dust. It is further defined as either simple or complicated silicosis.

Simple silicosis is characterized by lung lesions (shown as radiographic opacities) less than 1 centimeter in diameter, primarily in the upper lung zones. Often, simple silicosis is not associated with symptoms, detectable changes in lung function or disability. Simple silicosis may be progressive and may develop into complicated silicosis or progressive massive fibrosis (PMF).

Complicated silicosis or PMF is characterized by lung lesions (shown as radiographic opacities) greater than 1 centimeter in diameter. Although there may be no symptoms associated with complicated silicosis or PMF, the symptoms, if present, are shortness of breath, wheezing, cough and sputum production. Complicated silicosis or PMF may be associated with decreased lung function and may be disabling. Advanced complicated silicosis or PMF may lead to death. Advanced complicated silicosis or PMF can result in heart disease secondary to the lung disease (corpumonale).

Accelerated Silicosis can occur with exposure to high concentrations of respirable crystalline silica over a relatively short period; the lung lesions can appear within five (5) years of the initial exposure. The progression can be rapid. Accelerated silicosis is similar to chronic or ordinary silicosis, except that the lung lesions appear earlier and the progression is more rapid.

Acute Silicosis can occur with exposures to very high concentrations of respirable crystalline silica over a very short time period, sometimes as short as a few months. The symptoms of acute silicosis include progressive shortness of breath, fever, cough and weight loss. Acute silicosis is fatal.

B. CANCER

IARC - The International Agency for Research on Cancer ("IARC") concluded that there was "*sufficient evidence* in humans for the carcinogenicity of crystalline silica in the forms of quartz or cristobalite from occupational sources", and that there is "*sufficient evidence* in experimental animals for the carcinogenicity of quartz and cristobalite." The overall IARC evaluation was that "crystalline silica inhaled in the form of quartz or cristobalite from occupational sources is *carcinogenic to humans (Group 1)*." The IARC evaluation noted that "carcinogenicity was not detected in all industrial circumstances studies. Carcinogenicity may be dependent on inherent characteristics of the crystalline silica or on external factors affecting its biological activity or distribution of its polymorphs." For further information on the IARC evaluation, see IARC Monographs on the Evaluation of Carcinogenic Risks to Humans, Volume 68, "Silica, Some Silicates..." (1997).

NTP - The National Toxicology Program, in its Ninth Annual Report on Carcinogens, concluded that respirable crystalline silica is known to be a human carcinogen, based on sufficient evidence of carcinogenicity from studies in humans indicating a casual relationship between exposure to respirable crystalline silica and increased lung cancer rates in workers exposed to crystalline silica dust.

There is substantial literature on the issues of the carcinogenicity of crystalline silica, which the reader should consult for additional information. A summary of the literature is set forth in "Exposure to crystalline silica and risk of lung cancer; the epidemiological evidence", Thorax, Volume 51, pp. 97-102 (1996). The official statement of the American Thoracic Society on the issue of silica carcinogenicity was published in "Adverse Effects of Crystalline Silica Exposure", American Journal of Respiratory and Critical Care Medicine, Volume 155, pp. 761-765 (1997). The official statement concluded that "The available data support the conclusion that silicosis produces increased risk for bronchogenic carcinoma. The cancer risk may also be increased by smoking and other carcinogens in the workplace. Epidemiologic studies provide convincing evidence for increased cancer risk among tobacco smokers with silicosis. Less information is available for never-smokers and for workers exposed to silica but who do not have silicosis. For workers with silicosis, the risks for lung cancer are relatively high and consistent among various countries and investigators. Silicosis should be considered a condition that predisposes workers to an increased risk of lung cancer." Id. at 763.

C. SCLERODERMA
There is evidence that exposure to respirable crystalline silica or that the disease silicosis is associated with the increased incidence of scleroderma, an immune system disorder manifested by a fibrosis (scarring) of the lungs, skin and other internal organs. Recently, the American Thoracic Society noted that "there is persuasive evidence relating scleroderma to occupational silica exposures in setting where there is appreciable silicosis risk." The following may be consulted for additional information on silica, silicosis and scleroderma (also known as progressive systemic sclerosis): Occupational Lung Disorders, Third Edition, Chapter 12, entitled "Silicosis and Related Diseases", Parkes, W. Raymond (1994). "Adverse Effects of Crystalline Silica Exposure", American Journal of Respiratory and Critical Care Medicine, Volume 155, pp. 761-765 (1997).

D. TUBERCULOSIS
Individuals with silicosis are at increased risk to develop tuberculosis, if exposed to persons with tuberculosis. The following may be consulted for further information: Occupational Lung Disorders, Third Edition, Chapter 12, entitled "Silicosis and Related Diseases", Parkes, W. Raymond (1994). "Adverse Effects of Crystalline Silica Exposure", American Journal of Respiratory and Critical Care Medicine, Volume 155, pp. 761-765 (1997).

E. NEPHROTOXICITY
There are several recent studies suggesting that exposure to respirable crystalline silica or that the disease silicosis is associated with the increased incidence of kidney disorders. The following may be consulted for additional information on silica, silicosis and nephrotoxicity: Occupational Lung Disorders, Third Edition, Chapter 12, entitled "Silicosis and Related Diseases", Parkes, W. Raymond (1994). "Further evidence of human silica nephrotoxicity in occupationally exposed workers", British Journal of Industrial Medicine, Vol. 50, No. 10, pp. 907-912 (1993). "Adverse Effects of Crystalline Silica Exposure", American Journal of Respiratory and Critical Care Medicine, Volume 155, pp. 761-765 (1997).

## Section 12 – Ecological Information

Crystalline silica is not known to be ecotoxic.

## Section 13 – Disposal Considerations

General: Crystalline silica may be landfilled. Material should be placed in covered containers to minimize generation of airborne dust.

RCRA: Crystalline silica (quartz) is not classified as a hazardous waste under the Resource Conservation and Recovery Act, or its regulations, 40 CFR §261 et seq.

The above information applies to Manley Bros. Silica Sand only as sold. The product may be contaminated during use, and it is the responsibility of the user to assess the appropriate disposal method in this situation.

## Section 14 – Transport Information

Crystalline silica (quartz) is not a hazardous material for purposes of transportation under the U. S. Department of Transportation Table of Hazardous Materials, 49 CFR §172.101.

## Section 15 – Regulatory Information

UNITED STATES (FEDERAL AND STATE)

TSCA No.: Crystalline silica (quartz) appears on the EPA TSCA inventory under the CAS No. 14808-60-7.

RCRA: Crystalline silica (quartz) is not classified as a hazardous waste under the Resource Conservation and Recovery Act, or its regulations, 40 CFR §261 et seq.
CERCLA: Crystalline silica (quartz) is not classified as a hazardous substance under regulations of the Comprehensive Environmental Response Compensation and Liability Act (CERCLA), 40 CFR §302.
Emergency Planning and Community Right to Know Act: Crystalline silica (quartz) is not an extremely hazardous substance under Section 302 and is not a toxic chemical subject to the requirements of Section 313.
Clean Air Act: Crystalline silica (quartz) mined and processed was not processed with or does not contain any Class I or Class II ozone depleting substances.
FDA: Silica is included in the list of substances that may be included in coatings used in food contact surfaces, 21 CFR §175.300(b)(3)(xxvi).
NTP: Respirable crystalline silica (quartz) is classified as known to be a human carcinogen.
OSHA Carcinogen: Crystalline silica (quartz) is not listed.
California Proposition 65: Crystalline silica (quartz) is classified as a substance known to the state of California to be a carcinogen.

CANADA

Domestic Substances List: Silica, as a naturally occurring substance, is on the Canadian DSL.
WHMIS Classification: D-2A

OTHER

EINECS No.: 231-545-4
EEC Label (Risk/Safety Phrases): R 48/20, R 40/20, S22, S38
IARC: Crystalline silica (quartz) is classified in IARC Group 1.
National, state, provincial or local emergency planning, community right to know or other laws, regulations or ordinances may be applicable--consult applicable national, state, provincial or local laws.

## Section 16 – Other Information

Hazardous Material Information System (HMIS):

| | |
|---|---|
| Health | * |
| Flammability | 0 |
| Reactivity | 0 |
| Protective Equipment | E |

* For further information on health effects, see Sections 3 and 11 of this MSDS.

More information on the effects of crystalline silica exposure may be obtained from the following:

National Institute for Occupational Safety and Health (NIOSH)-----Phone: 1-800-35-NIOSH
Website: http://www.cdc.gov/niosh

National Toxicology Program (NTP)-----Phone: 1-919-541-0530
Website: http://ntp-server.niehs.nih.gov

Occupational Safety and Health Administration (OSHA)-----Phone: 1-800-321-OSHA
Website: http://www.osha.gov

## MANLEY BROS. OF INDIANA, INC. COMPANY DISCLAIMER

The data in this Material Safety Data Sheet relates only to the specific material designated herein and does not relate to use in combination with any other material or in any process. The information and recommendations set forth herein are based on technical data that Manley Bros. of Indiana, Inc. believes reliable. It is intended for use by persons having technical skill and at their own discretion and risk. Since conditions of use are outside the control of Manley Bros. of Indiana, Inc., no warranties, expressed or implied, are made and no liability is assumed in connection with any use of this information. Any use of this data and information must be determined by the user to be in accordance with federal, state, and local laws and regulations. Customers and users of silica must comply with all applicable health and safety laws, regulations, and orders.

ARCADIS Submittal # CD-069-R1

# ARCADIS US, INC
# SUBMITTAL FORM

To Mr. Matthew Bowman, Construction Manager
Arcadis Us, Inc
251 E. Ohio Street, Suite 800
Indianapolis, IN 46204

Submittal No. 315100-08-A
Date of Submittal: June 6, 2012
Contractor: Weeks
Contract No.: B0009964.001
Subject of Submittal: AS Built

Specification No. 31 51 00 Par. No. 1.4.3
Drawing No. AS_BUILT

WE ARE SENDING YOU ATTACHED THE FOLLOWING: (Indicate All Applicable Items)

- [ ] Shop Drawings
- [ ] Progress Schedules
- [ ] Testing Procedure
- [X] First Submission
- [ ] Third Submission
- [ ] Sample
- [ ] O&M Manual
- [ ] Contact List
- [ ] Second Submission
- [ ] _____ Submission

| DESCRIPTION (Itemize All Components) | NO. OF COPIES |
|---|---|
| | |
| **AS BUILT DRAWING FOR THE TIE BACK AND OTHERS** | 1 |
| | |
| | |
| | |

[ ] REVIEWED
[X] REVIEWED & NOTED
REVIEWED SOLELY FOR GENERAL COMPLIANCE WITH CONTRACT DOCUMENTS
ARCADIS
SIGNATURE
8/13/12
Date
Office Location
[ ] RESUBMIT
[ ] REJECTED

Complete either (a) or (b) and ©, in th
a (X) The Contractor verified that the
shown,, or indicated in the Contract D
b ( ) The Contractor has verified that
shown, or indicated in the Contract D

ORIGINAL DELIVERY TO ARCADIS

c (X) The Contractor has stamped o
certifying that the Contractor has sat
requirements of Article 6 of the Gen

Signed (By the Contractor): _____
Cla

**CD-069-R1**

**REVIEWED & NOTED:**

In addition to the markups provided on S-2, S-4, S-6, S-7, S-13, S-14, S-15, and S-18, the following items should be noted:

1) Detail of southeast corner connection/closure and grout
2) Detail of singer realty support in southeast corner
3) Added closure plate near top of weir gate
4) Elimination of tiebacks T-1 and T-38 should be noted on S-2 (in addition to the current notes on S-13 and S-15).

SUBMITTAL REVIEW: CD-069-R1 AS-BUILT RECORDS - TIEBACKS GRM 7/25/12

— MARKUP TO ORIGINAL CD'S, WEEKS' AS-BUILT DOCUMENTATION

— CONSISTENT WITH ARCADIS' AS-BUILT DOCUMENTATION

TEXT — COMMENTS ABOUT WEEKS' AS-BUILT DOCUMENTATION

LEGEND:

- GV-1 GAS VENT
- EW-1 EXISTING EXTRACTION WELL
- GCP-1-1 GRADIENT CONTROL PAIR PIEZOMETER
- T-? TEXT WITH BOX DENOTES TIEBACKS THAT WILL BE SUBJECT TO AN ADDITIONAL 10 FT OF BONDED LENGTH DEPENDENT UPON DRILLING CONDITIONS AND PERFORMANCE TESTING AND PROOF TESTING

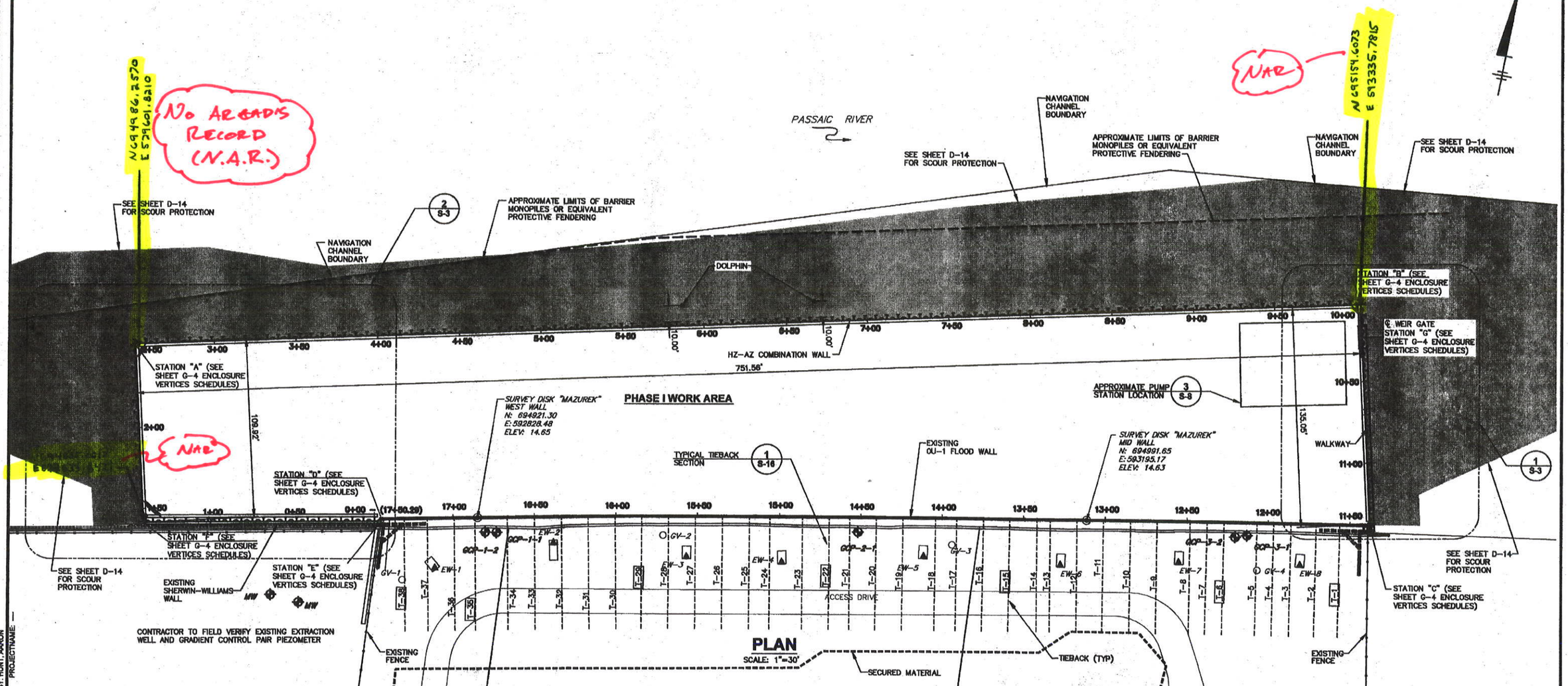


CITY: TOLEDO-OH DIV/GROUP: DBA: HUNT LD: PIC:R. ROMAGNOLI PM:R. ROMAGNOLI TM:R. ROMAGNOLI LYR:ON=*;OFF=*REF
W:\60FP01\Data\Project\B0009661.0000\Drawing\B-2 SED OVERVIEW PLAN.dwg LAYOUT: SEDIMENT EXCAVATION ENCLOSURE OVERVIEW PLAN SAVED: 7/1/2011 3:44 PM ACADVER: 18.0S (LMS TECH) PAGESETUP: PDF 22/X34 2010 VERSION DWG TO PDF.PC3 PLOTSTYLETABLE:
PLTCONT:CTB PLOTTED: 7/1/2011 3:47 PM BY: HUNT, AARON PROJECTNAME: —
XREFS: 09961X00 09961X00-AA-PE 09961X00 09961X02 sheetpile wallwayPlan monopiles mattress 09964-0XL1 Navy_Channel Line1 OU-1Plan XWEEKSASBUILT
IMAGES:

0 30' 60' 90'
1"=30'

THIS BAR REPRESENTS ONE INCH ON THE ORIGINAL DRAWING: USE TO VERIFY FIGURE REPRODUCTION SCALE

| No. | Date | Revisions | By | Ckd |
|---|---|---|---|---|

THIS DRAWING IS THE PROPERTY OF THE ARCADIS ENTITY IDENTIFIED IN THE TITLE BLOCK AND MAY NOT BE REPRODUCED OR ALTERED IN WHOLE OR IN PART WITHOUT THE EXPRESS WRITTEN PERMISSION OF SAME.

| | | |
|---|---|---|
| Professional Engineer's Name: AARON A HUNT | | |
| Professional Engineer's No.: 24GE04804300 | | |
| State: NJ | Date Signed | Project Mgr.: RAR |
| Designed by: AAH | Drawn by: AAH | Checked by: RAK |

7/5/2011

ARCADIS

ARCADIS U.S., INC.
NEW JERSEY ENGINEERING CERTIFICATE OF AUTHORIZATION NUMBER 24GA27939600

TIERRA SOLUTIONS, INC. • LOWER PASSAIC RIVER, NEWARK, NJ
PHASE I CERCLA NON-TIME-CRITICAL REMOVAL ACTION

# SEDIMENT EXCAVATION ENCLOSURE OVERVIEW PLAN

STRUCTURAL

ARCADIS Project No. B0009964.0001
Date JULY 2011
ARCADIS 6723 TOWPATH ROAD BOX 66 SYRACUSE, NY 13214 TEL: 315.446.9120

S-2

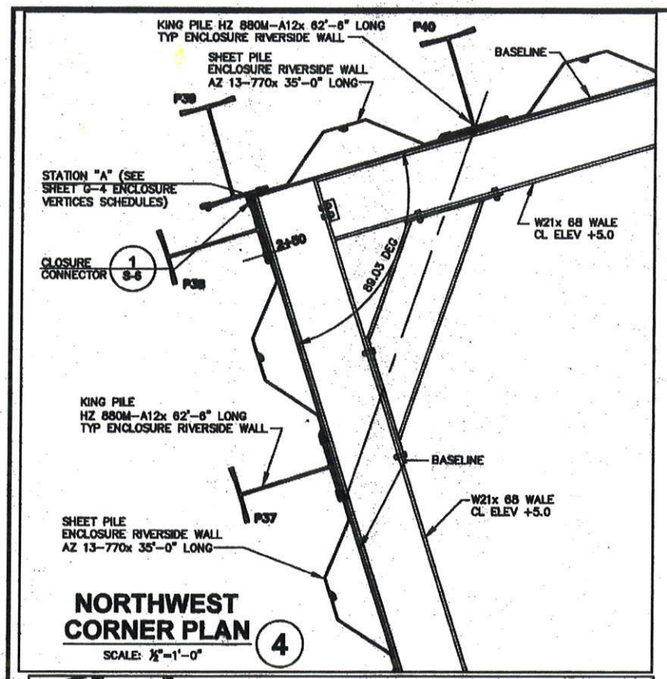


## NORTHWEST CORNER PLAN (4)

SCALE: ½"=1'-0"

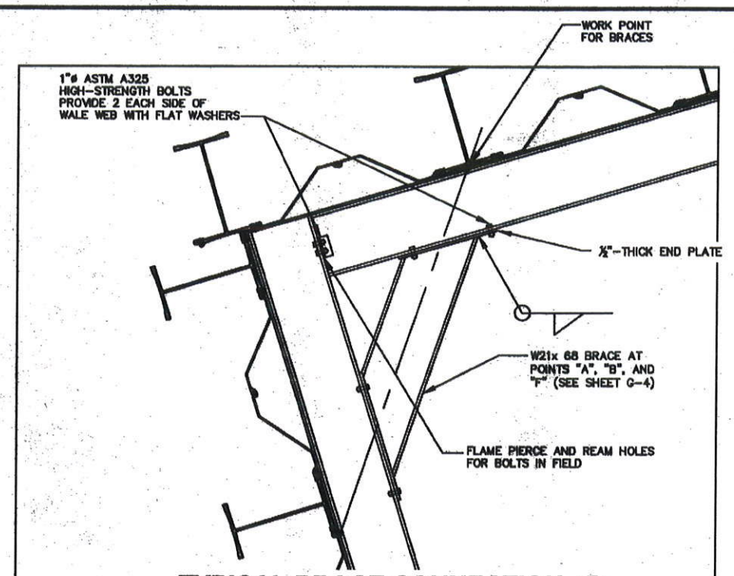


## TYPICAL BRACE CONNECTION (1)

SCALE: 1"=1'-0"

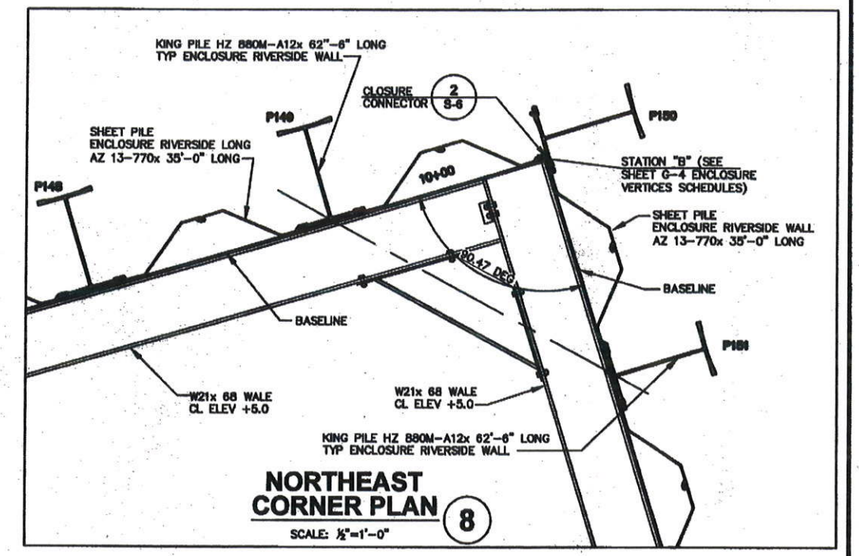


## NORTHEAST CORNER PLAN (8)

SCALE: ½"=1'-0"

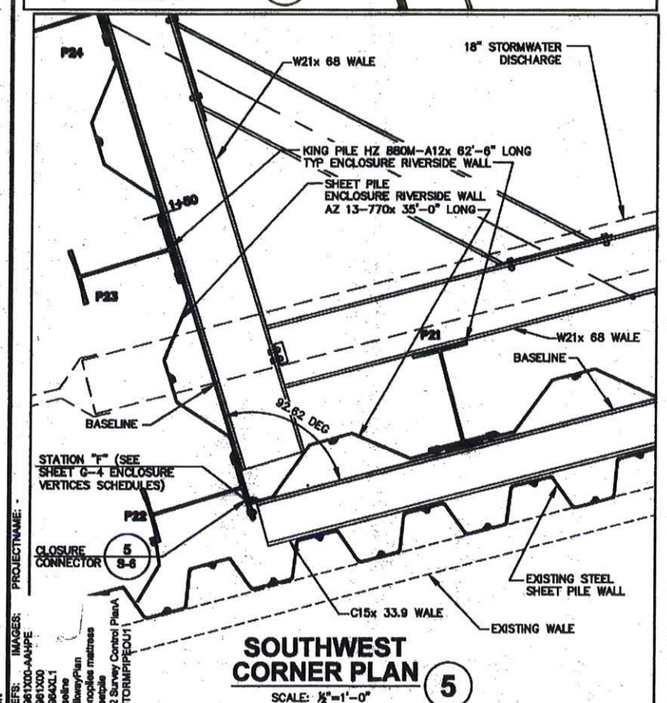


## SOUTHWEST CORNER PLAN (5)

SCALE: ½"=1'-0"

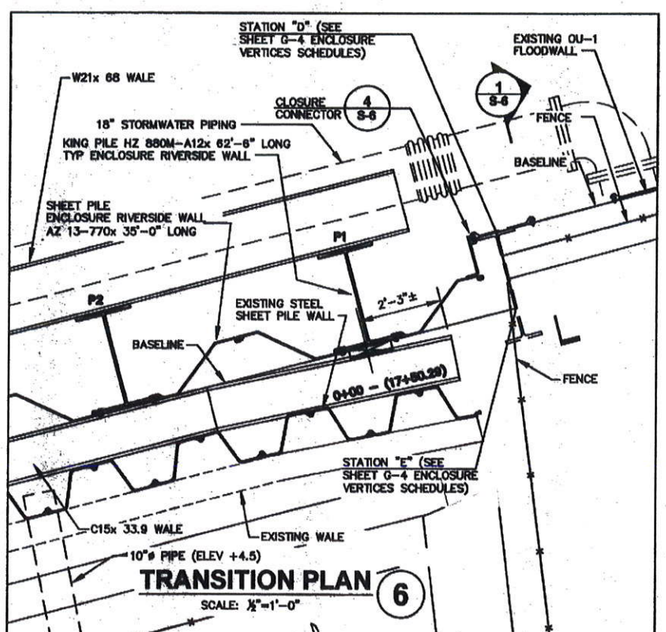


## TRANSITION PLAN (6)

SCALE: ½"=1'-0"

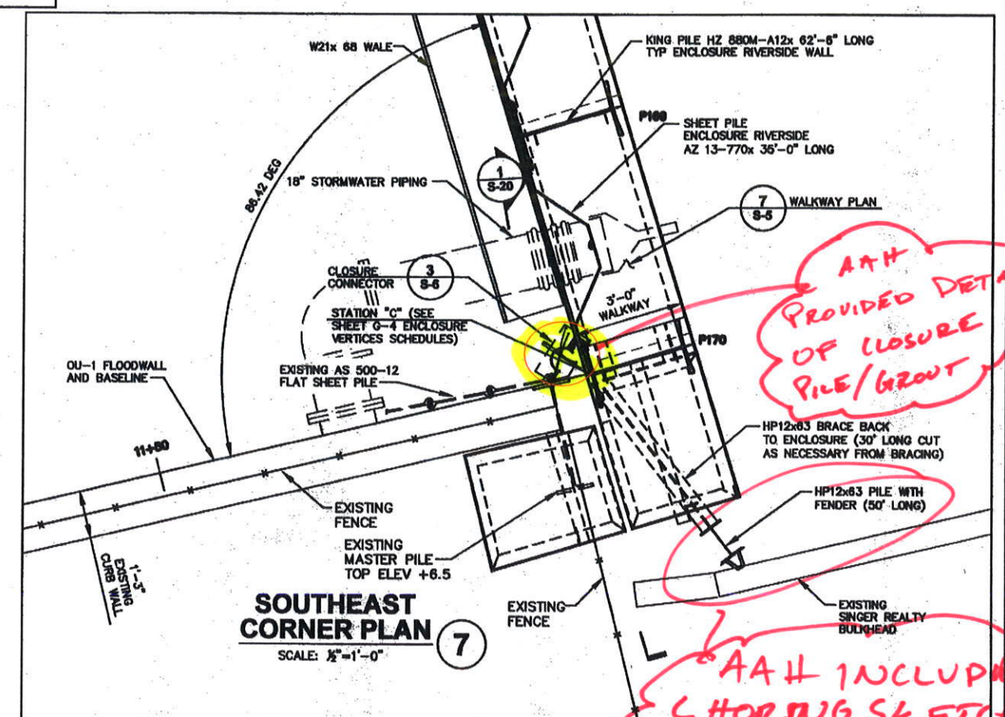


## SOUTHEAST CORNER PLAN (7)

SCALE: ½"=1'-0"

AAH PROVIDED DETAIL OF CLOSURE PILE/GROUT

AAH INCLUDES SHORING SKETCH @ SINGER

REFER TO INDIVIDUAL DETAIL TITLES FOR APPROPRIATE SCALE

THIS BAR REPRESENTS ONE INCH ON THE ORIGINAL DRAWING: USE TO VERIFY FIGURE REPRODUCTION SCALE

| No. | Date | Revisions | By | Ckd |
|---|---|---|---|---|

THIS DRAWING IS THE PROPERTY OF THE ARCADIS ENTITY IDENTIFIED IN THE TITLE BLOCK AND MAY NOT BE REPRODUCED OR ALTERED IN WHOLE OR IN PART WITHOUT THE EXPRESS WRITTEN PERMISSION OF SAME.

Professional Engineer's Name: AARON A HUNT
Professional Engineer's No.: 24GE04804300
State: NJ | Date Signed: | Project Mgr.: RAR
Designed by: AAH | Drawn by: AAH | Checked by: RAK

7/5/2011

ARCADIS

ARCADIS U.S., INC.
NEW JERSEY ENGINEERING CERTIFICATE OF AUTHORIZATION NUMBER 24GA27939600

TIERRA SOLUTIONS, INC. • LOWER PASSAIC RIVER, NEWARK, NJ
PHASE I CERCLA NON-TIME-CRITICAL REMOVAL ACTION

# ENCLOSURE CORNER DETAILS

STRUCTURAL

ARCADIS Project No. B0009984.0001
Date: JULY 2011

ARCADIS
6723 TOWPATH ROAD
BOX 66
SYRACUSE, NY 13214
TEL: 315.446.9120

S-4

CITY: TOLEDO-OH DIV/GROUP: DB/A. HUNT LD: PIC:R. ROMAGNOLI PM:R. ROMAGNOLI TM:R. ROMAGNOLI LYR: ON=*;OFF=*REF
W:\HO3FP01\Data\Project\B0009981.0000\Drawing\S-4 CORNER DETAILS.dwg LAYOUT: ENCLOSURE CORNER DETAILS SAVED: 6/30/2011 12:34 PM ACADVER: 18.0S (LMS TECH) PAGESETUP: PDF 22X34 2010 VERSION DWG TO PDF.PC3 PLOTSTYLETABLE: PLTCONT.CTB PLOTTED: 7/1/2011
3:47 PM BY: HUNT, AARON
PROJECTNAME: -
XREFS: IMAGES:
09861X00-AAHPE
09861X00
09854XL1
Headline
Transportation
Transportation mastness
Freeclale
G-2 Survey Control Plan
XSTORMPIPEOU1

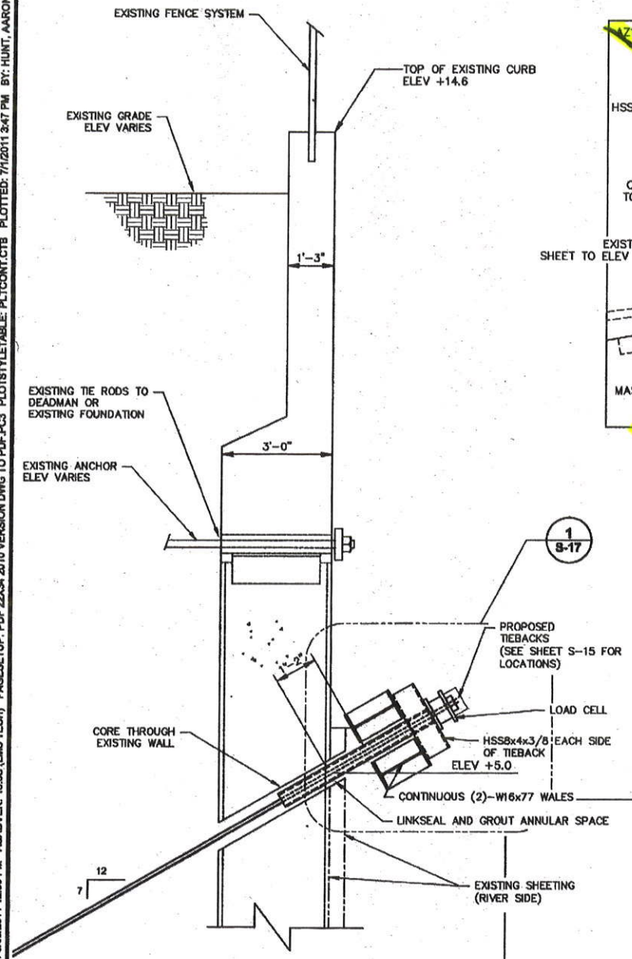


## OU-1 FLOODWALL SECTION (6)

SCALE: ½"=1'-0"

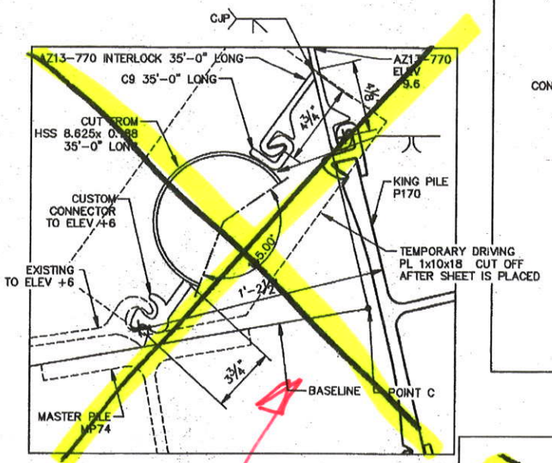


## ENLARGED INTERLOCK DETAIL

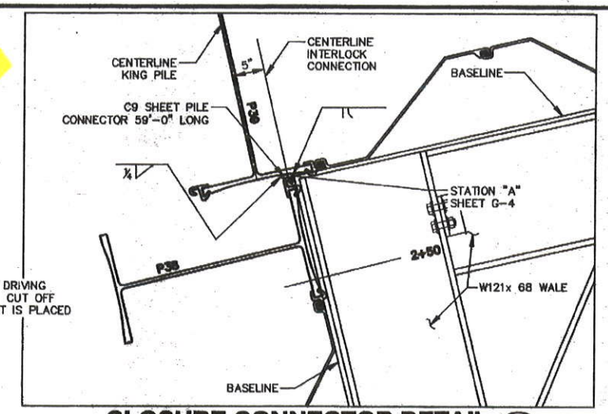


## CLOSURE CONNECTOR DETAIL (1)

SCALE: 1"=1'-0"

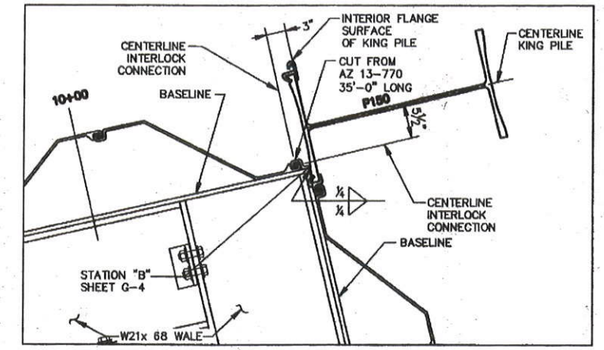


## CLOSURE CONNECTOR DETAIL (2)

SCALE: 1"=1'-0"

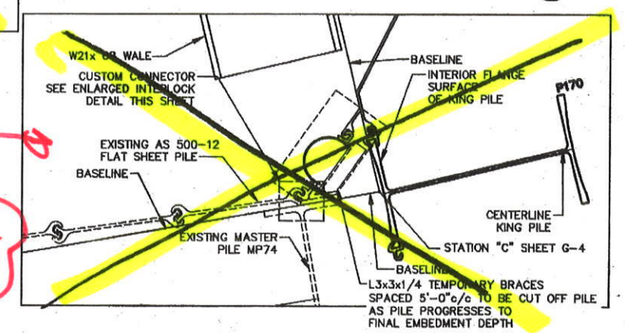


## CLOSURE CONNECTOR DETAIL (3)

SCALE: 1"=1'-0"

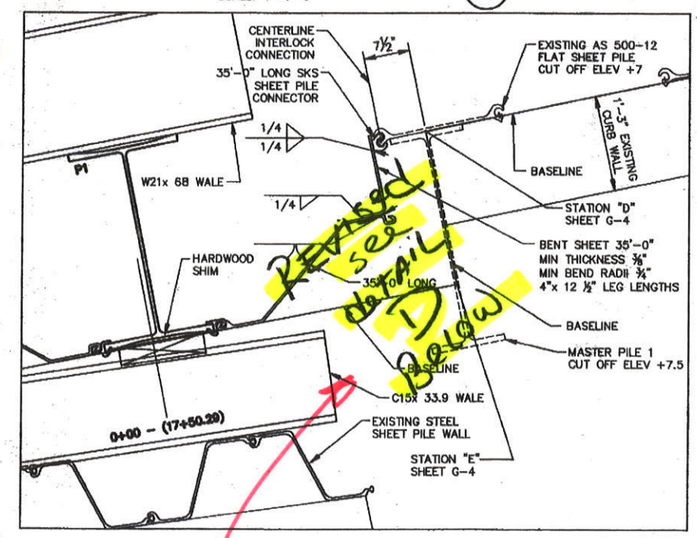


REVISED SEE DETAIL D BELOW

## CLOSURE CONNECTOR DETAIL (4)

SCALE: 1"=1'-0"

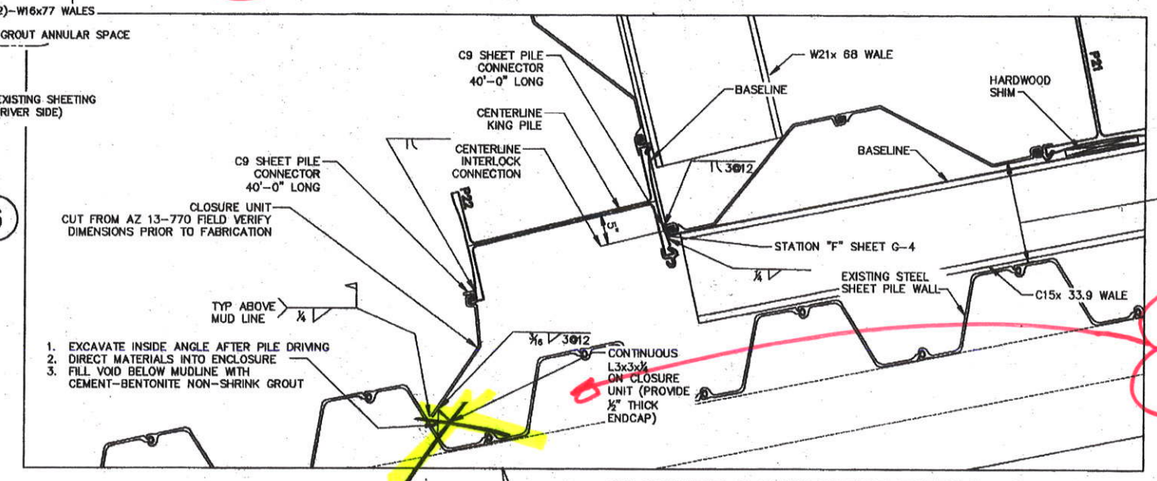


## CLOSURE CONNECTOR DETAIL (5)

SCALE: 1"=1'-0"

CONTRACTOR WILL MAINTAIN WATER LEVEL WITHIN RANGE OF +4 TO +5 FEET NGVD29 IN THIS SPACE IN ADDITION TO THE LEVEL INSIDE THE ENCLOSURE

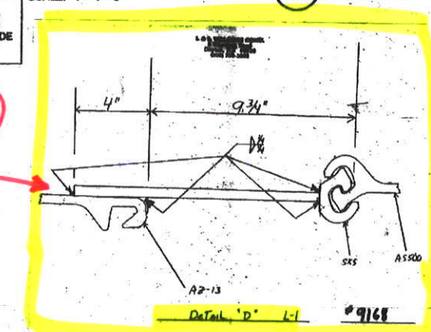


AAH PROVIDED DETAIL OF CLOSURE PILE/GROUT USED

NOT IN AAH AS-BUILTS

CITY: TOLEDO-OH DIV/GROUP: DBA: HUNT LD: PIC:R. ROMAGNOLI PM:R. ROMAGNOLI TM:R. ROMAGNOLI LYR: ON=*;OFF=*REF
WO:H03FP01\Data\Projects\B0009961.0000\Drawing\PILE PILING.dwg LAYOUT: SECTIONS SAVED: 6/30/2011 12:36 PM ACADVER: 18.0S (LMS TECH) PAGESETUP: PDF 22X34 2010 VERSION DWG TO PDF.PC3 PLOTSTYLETABLE: PLTCONT.CTB PLOTTED: 7/1/2011 3:47 PM BY: HUNT, AARON

XREFS: IMAGES: PROJECTNAME: -
09961X00-AAHPE
09961X00
XBASETIEBACK
09964XL1
baseline
wallcovplan
xbaseline
XWATERNOTE
XRBOX-TXT

0' 1' 2' 3' 4' 5' 6'
1/2"=1'-0"

THIS BAR REPRESENTS ONE INCH ON THE ORIGINAL DRAWING: USE TO VERIFY FIGURE REPRODUCTION SCALE

| No. | Date | Revisions | By | Ckd |
|---|---|---|---|---|

THIS DRAWING IS THE PROPERTY OF THE ARCADIS ENTITY IDENTIFIED IN THE TITLE BLOCK AND MAY NOT BE REPRODUCED OR ALTERED IN WHOLE OR IN PART WITHOUT THE EXPRESS WRITTEN PERMISSION OF SAME.

Professional Engineer's Name: AARON A HUNT
Professional Engineer's No.: 24GE04804300

| State | Date Signed | Project Mgr. |
|---|---|---|
| NJ | | RAR |
| Designed by AAH | Drawn by AAH | Checked by RAK |

7/5/2011

ARCADIS
ARCADIS U.S., INC.
NEW JERSEY ENGINEERING CERTIFICATE OF AUTHORIZATION NUMBER 24GA27939600

TIERRA SOLUTIONS, INC. • LOWER PASSAIC RIVER, NEWARK, NJ
PHASE I CERCLA NON-TIME-CRITICAL REMOVAL ACTION

# SECTIONS

SHEET 1 OF 3
STRUCTURAL

ARCADIS Project No. B0009964.0001
Date JULY 2011

ARCADIS
6723 TOWPATH ROAD
BOX 66
SYRACUSE, NY 13214
TEL: 315.446.9120

S-6

NOTE OVER BARRIER MONOPILES:
SUBMITTAL OF ALTERNATE ENCLOSURE PROTECTION DESIGN MAY BE CONSIDERED BY ENGINEER AND MUST INCLUDE PLANS AND DETAILS FOR APPROVAL BY ENGINEER TO MODIFY BARRIER MONOPILE PLAN.

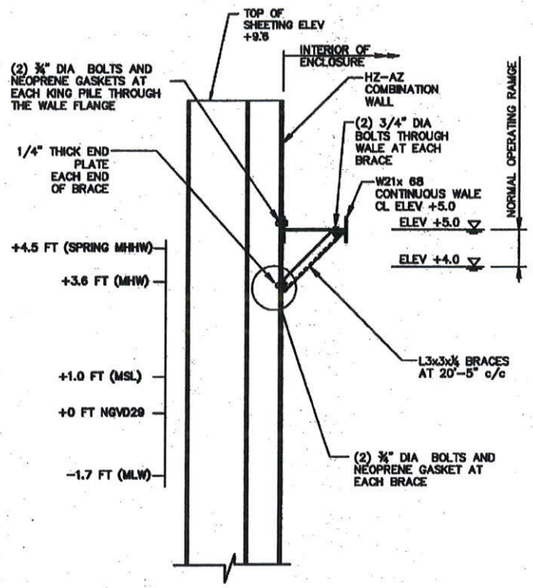


**SECTION**
**TYPICAL RIVERSIDE SECTION** (1)
1/2"=1'-0"

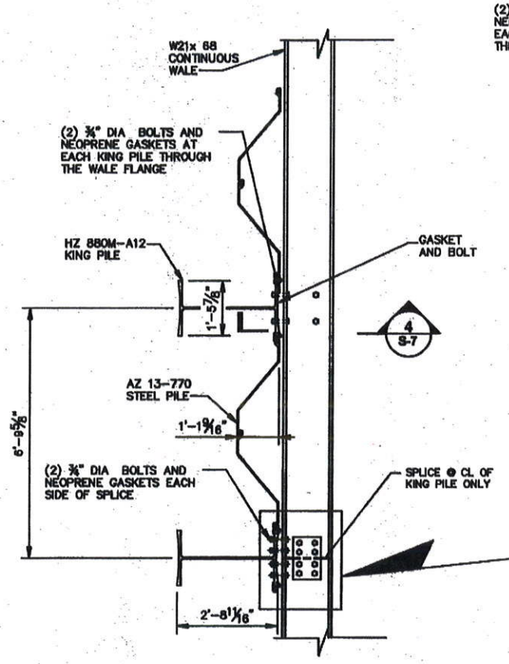


**PLAN**
**TYPICAL WALL CONSTRUCTION** (2)
1/2"=1'-0"

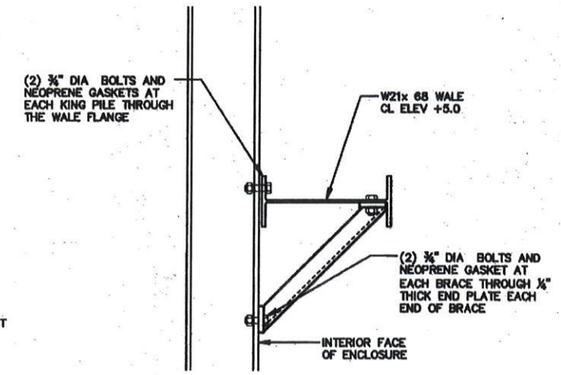


**TYPICAL WALE CONNECTION** (4)
1"=1'-0"

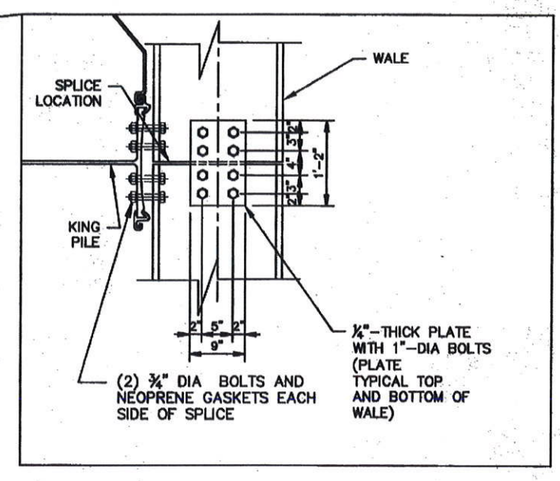


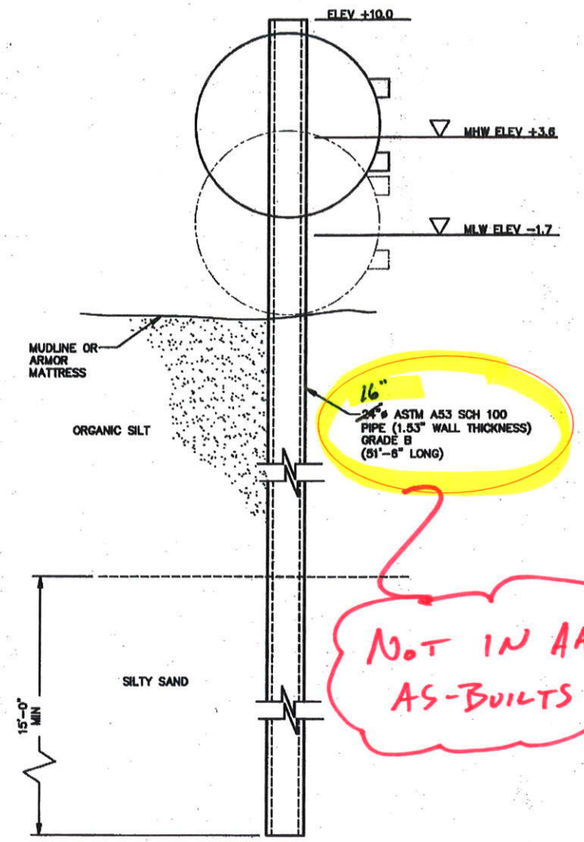


NOT IN AAH AS-BUILTS

**MONOPILE** (3)
½"=1'-0"

CITY: TOLEDO-OH DIV/GROUP: DB/A. HUNT LD: PIC/R. ROMAGNOLI PM/R. ROMAGNOLI TM/R. ROMAGNOLI LYR: ON=*;OFF=*REF
\\OH03FP01\Data\Project\B0009951.0000\Drawing\S-7 SECTIONS MONOPILE.dwg LAYOUT: S-7 SECTIONS MONOPILE SAVED: 6/30/2011 12:38 PM ACADVER: 18.0S (LMS TECH) PAGESETUP: PDF 22x34 2010 VERSION DWG TO PDF.PC3 PLOTSTYLETABLE: PLTCONT.CTB PLOTTED: 7/1/2011 3:48
PM BY: HUNT, AARON
XREFS: 09861X00 X0MONONOTE X0RIVERLEGEND1-4 IMAGES: PROJECTNAME: -

0' 1' 2' 3' 4' 5' 6'
1/2"=1'-0"
THIS BAR REPRESENTS ONE INCH ON THE ORIGINAL DRAWING: USE TO VERIFY FIGURE REPRODUCTION SCALE

| No. | Date | Revisions | By | Ckd |
|---|---|---|---|---|

THIS DRAWING IS THE PROPERTY OF THE ARCADIS ENTITY IDENTIFIED IN THE TITLE BLOCK AND MAY NOT BE REPRODUCED OR ALTERED IN WHOLE OR IN PART WITHOUT THE EXPRESS WRITTEN PERMISSION OF SAME.

Professional Engineer's Name: AARON A HUNT
Professional Engineer's No.: 24GE04804300
State: NJ | Date Signed: | Project Mgr.: RAR
Designed by: AAH | Drawn by: AAH | Checked by: RAK

7/5/2011

ARCADIS
ARCADIS U.S., INC.
NEW JERSEY ENGINEERING CERTIFICATE OF AUTHORIZATION NUMBER 24GA27939600

TIERRA SOLUTIONS, INC. • LOWER PASSAIC RIVER, NEWARK, NJ
PHASE I CERCLA NON-TIME-CRITICAL REMOVAL ACTION

**SECTIONS**
SHEET 2 OF 3
STRUCTURAL

ARCADIS Project No. B0009964.0001
Date JULY 2011
ARCADIS
6723 TOWPATH ROAD
BOX 66
SYRACUSE, NY 13214
TEL: 315.446.9120

S-7

| DESCRIPTION OF WORK | | WIDTH | AMOUNT REMOVED LENGTH (FRONT) | AMOUNT REMOVED LENGTH (BACK) | DESCRIPTION OF WORK | | WIDTH | AMOUNT REMOVED LENGTH (FRONT) | AMOUNT REMOVED LENGTH (BACK) |
|---|---|---|---|---|---|---|---|---|---|
| Wale | Tieback # | [INCHES] | [INCHES] | [INCHES] | Wale | Tieback # | [INCHES] | [INCHES] | [INCHES] |
| 7W2 | 1 | 7 | Not Used | Not Used | 4W2 | 20 | 7 | 1 | 1.5 |
| 7W2 | 2 | 7 | 1 | 2 | 4W2 | 21 | 7 | 1 | 1.5 |
| 7W1 | 3 | 7 | - | - | 4W2 | 22 | 7 | 3 | 2 |
| 7W1 | 4 | 7 | - | 3 | 4W1 | 23 | 7 | 1.5 | 3 |
| 7W1 | 5 | 7 | - | - | 4W1 | 24 | 7 | 2 | 2 |
| 7W1 | 6 | 7 | - | 5 | 4W1 | 25 | 7 | 2 | 2 |
| 6W2 | 7 | 7 | - | 4 | 3W2 | 26 | 7 | 3.5 | 5 |
| 6W2 | 8 | 7 | - | 4.5 | 3W2 | 27 | 7 | 2 | 2 |
| 6W2 | 9 | 7 | 1 | 3 | 3W2 | 28 | 7 | 3 | 2 |
| 6W1 | 10 | 7 | 3 | 3 | 3W1 | 29 | 7 | 2.5 | 3 |
| 6W1 | 11 | 7 | 1 | 2 | 3W1 | 30 | 7 | 1.5 | 2 |
| 6W1 | 12 | 7 | 1 | 2 | 3W1 | 31 | 7 | 1.5 | 1.5 |
| 5W2.2 | 13 | 7 | 1 | 3 | 2W3 | 32 | 7 | 2 | 2 |
| 5W2.2 | 14 | 7 | 1 | 3 | 2W3 | 33 | 7 | 3 | 5 |
| 5W2.1 | 15 | 7 | 3 | 1.5 | 2W3 | 34 | 7 | 3 | 3 |
| 5W2.1 | 16 | 7 | 1 | 1 | 2W2 | 35 | 7 | 1 | 4 |
| 5W1 | 17 | 7 | 1 | 2 | 2W2 | 36 | 7 | 2.5 | 3.5 |
| 5W1 | 18 | 7 | 0.5 | - | 2W1 | 37 | 7 | 2 | 3 |
| 5W1 | 19 | 7 | 2 | 0.5 | 2W1 | 38 | 7 | - | - |

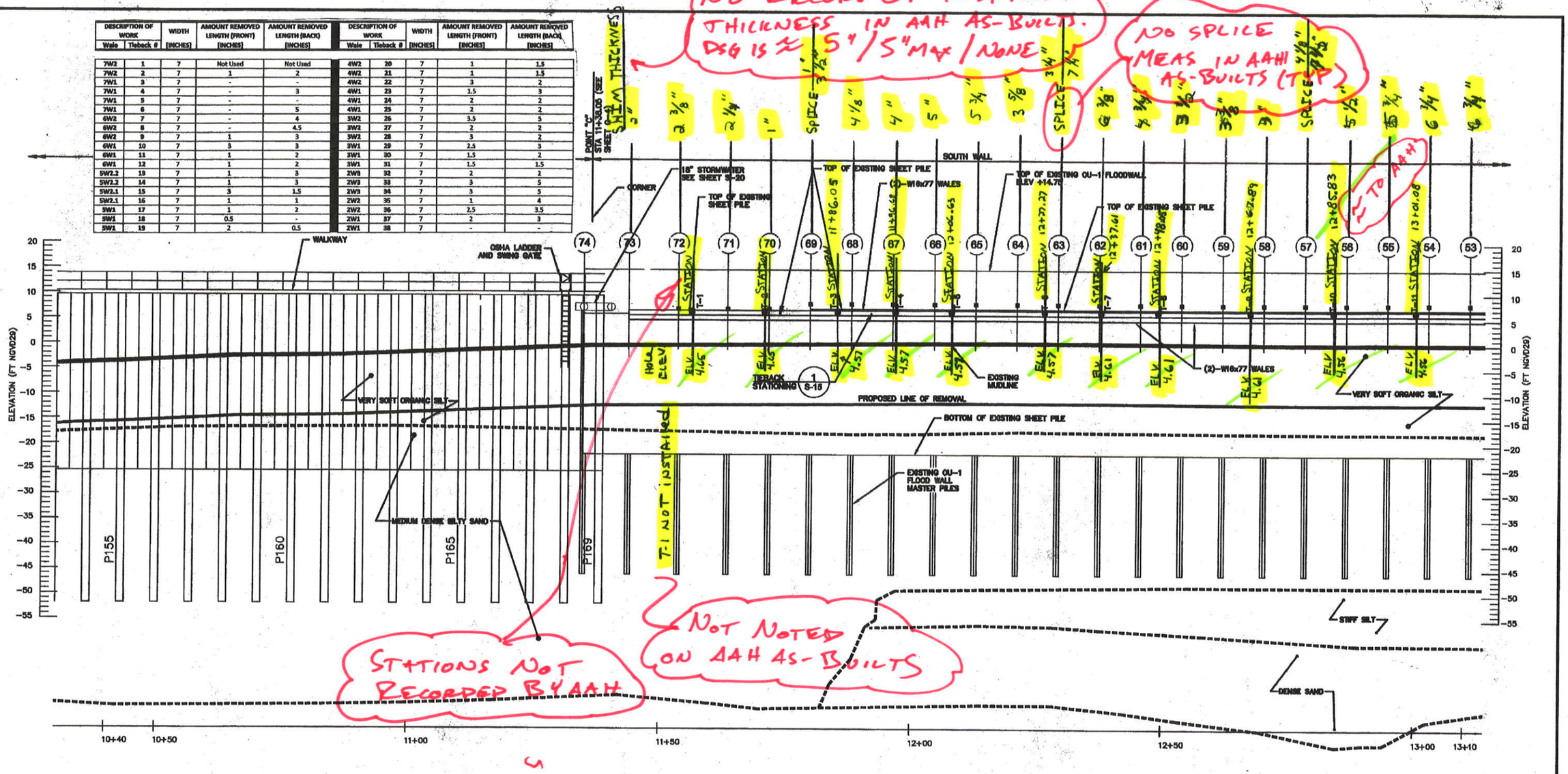


NOTE: ALL SOIL DELINEATIONS ARE ESTIMATED FROM AVAILABLE BORING INFORMATION AND SHOULD BE CONSIDERED APPROXIMATE.

## ELEVATIONS STA 10+40 TO 13+10

1"=10'-0"

CITY: TOLEDO-OH DIV/GROUP: DB:A. HUNT LD: PK:R. ROMAGNOLI PM:R. ROMAGNOLI TM:R. ROMAGNOLI LYR:ON=*;OFF=*REF
TO:H:\3FP01\Data\Project\B0009961.0000\Drawing\S-13 ELEV 1040 1310.dwg LAYOUT: ENCLOSURE OU1 WALL SAVED: 6/30/2011 12:42 PM ACADVER: 18.0S (LMS TECH) PAGESETUP: PDF 22X34 2010 VERSION DWG TO PDF.PC3 PLOTSTYLETABLE: PLTCONT.CTB PLOTTED: 7/1/2011 3:48 PM
BY: HUNT, AARON

XREFS: BIMAGES: PROJECTNAME: -
09981X00
XBASEPLEELEV
XVERTBARS
XVERTBARSMIR
XWEIRGATE
XGLASS
XSOILSSTBOR
XSOILUPDATE
XSOILDELINEATION

0 10' 20' 30'
1"=10'

THIS BAR REPRESENTS ONE INCH ON THE ORIGINAL DRAWING: USE TO VERIFY FIGURE REPRODUCTION SCALE

| No. | Date | Revisions | By | Ckd |
|---|---|---|---|---|

THIS DRAWING IS THE PROPERTY OF THE ARCADIS ENTITY IDENTIFIED IN THE TITLE BLOCK AND MAY NOT BE REPRODUCED OR ALTERED IN WHOLE OR IN PART WITHOUT THE EXPRESS WRITTEN PERMISSION OF SAME.

Professional Engineer's Name: AARON A HUNT
Professional Engineer's No.: 24GE04804300
State: NJ | Date Signed: 7/5/2011 | Project Mgr.: RAR
Designed by: AAH | Drawn by: AAH | Checked by: RAK

ARCADIS
ARCADIS U.S., INC.
NEW JERSEY ENGINEERING CERTIFICATE OF AUTHORIZATION NUMBER 24GA27939600

TIERRA SOLUTIONS, INC. • LOWER PASSAIC RIVER, NEWARK, NJ
PHASE I CERCLA NON-TIME-CRITICAL REMOVAL ACTION

# ENCLOSURE ELEVATIONS STA 10+40 TO 13+10

STRUCTURAL

ARCADIS Project No. B0009964.0001
Date JULY 2011
ARCADIS 6723 TOWPATH ROAD BOX 66 SYRACUSE, NY 13214 TEL: 315.446.9120

S-13

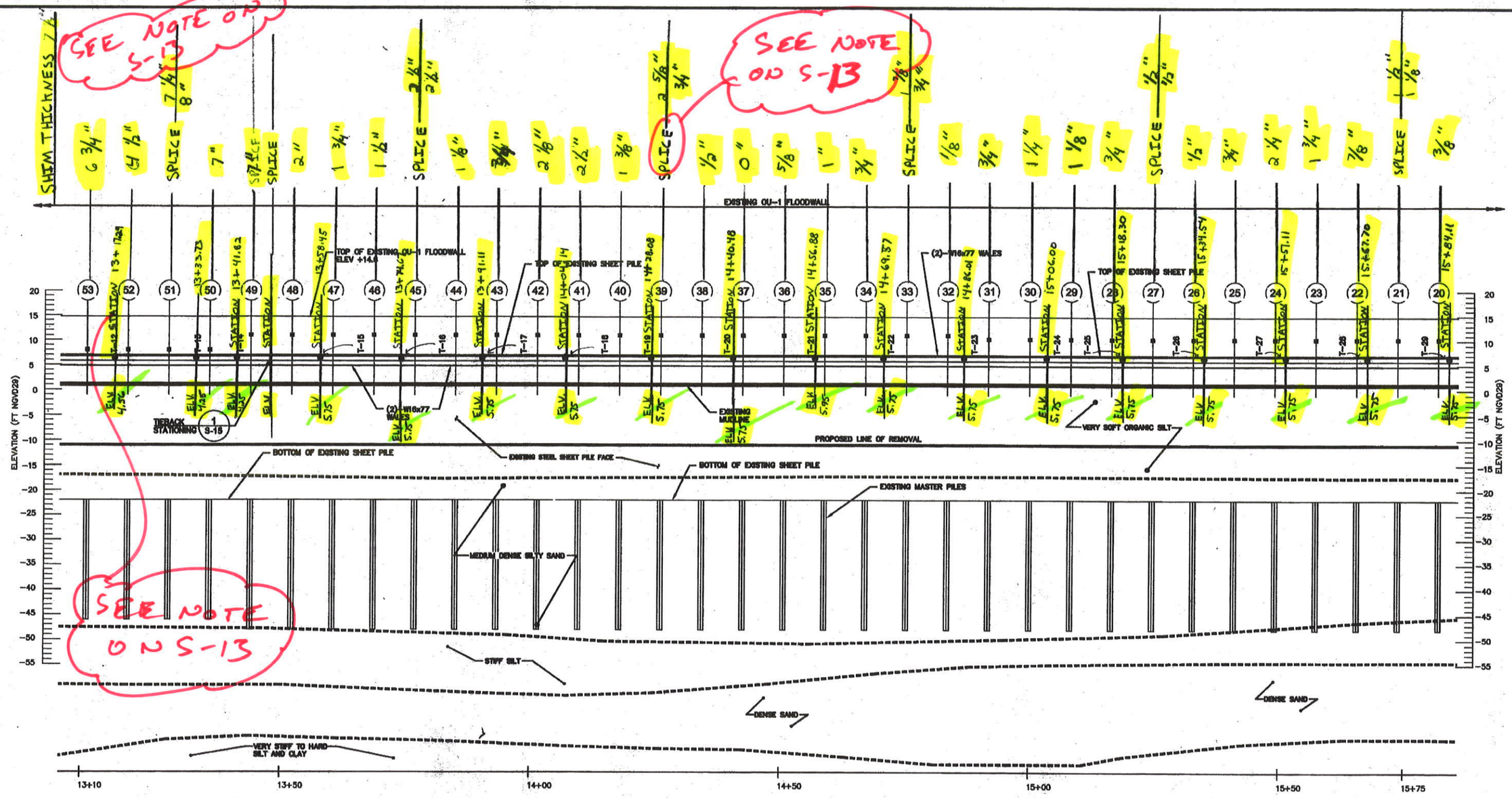


NOTE: ALL SOIL DELINEATIONS ARE ESTIMATED FROM AVAILABLE BORING INFORMATION AND SHOULD BE CONSIDERED APPROXIMATE.

## ELEVATIONS STA 13+10 TO 15+75

1"=10'-0"

XREFS: 09961X00 XBASEPLEELEV XVERTBARSMIR XVERTBARS XWEIRGATE XBASETBSTBDR XSOLDEFINIT XSOLDELINEATION

IMAGES:

PROJECTNAME: -

CITY: TOLEDO-OH DIVGROUP: DB:A.HUNT LD: PIC:R. ROMAGNOLI PM:R. ROMAGNOLI TM:R. ROMAGNOLI LYR:ON=*;OFF=*REF
10\H3SFP010\Data\Projects\B0009961.0000\Drawings\S-14 ELEV 1310-1575.dwg LAYOUT: ENCLOSURE WALL2 SAVED: 6/30/2011 12:40 PM ACADVER: 18.0S (LMS TECH) PAGESETUP: PDF 22X34 2010 VERSION DWG TO PDF.PC3 PLOTSTYLETABLE: PLTCONT.CTB PLOTTED: 7/1/2011 3:48 PM BY: HUNT, AARON

0 10' 20' 30'
1"=10'

THIS BAR REPRESENTS ONE INCH ON THE ORIGINAL DRAWING: USE TO VERIFY FIGURE REPRODUCTION SCALE

| No. | Date | Revisions | By | Ckd |
|---|---|---|---|---|

THIS DRAWING IS THE PROPERTY OF THE ARCADIS ENTITY IDENTIFIED IN THE TITLE BLOCK AND MAY NOT BE REPRODUCED OR ALTERED IN WHOLE OR IN PART WITHOUT THE EXPRESS WRITTEN PERMISSION OF SAME.

| Professional Engineer's Name | | |
|---|---|---|
| AARON A HUNT | | |
| Professional Engineer's No. | | |
| 24GE04804300 | | |
| State | Date Signed | Project Mgr. |
| NJ | | RAR |
| Designed by | Drawn by | Checked by |
| AAH | AAH | RAK |

7-1-2011

ARCADIS

ARCADIS U.S., INC.
NEW JERSEY ENGINEERING CERTIFICATE OF AUTHORIZATION NUMBER 24GA27939600

TIERRA SOLUTIONS, INC. • LOWER PASSAIC RIVER, NEWARK, NJ
PHASE I CERCLA NON-TIME-CRITICAL REMOVAL ACTION

# ENCLOSURE ELEVATIONS STA 13+10 TO 15+75

STRUCTURAL

ARCADIS Project No. B0009964.0001

Date JULY 2011

ARCADIS
6723 TOWPATH ROAD
BOX 66
SYRACUSE, NY 13214
TEL: 315.446.9120

S-14

| TIEBACK ID | STATION | INCREMENT TO NEXT TIEBACK | TIEBACK ID | STATION | INCREMENT TO NEXT TIEBACK | TIEBACK ID | STATION | INCREMENT TO NEXT TIEBACK |
|---|---|---|---|---|---|---|---|---|
| T-1 | 11+56.27 | 14.42 FT | T-14 | 13+41.82 | 16.63 FT | T-27 | 15+51.28 | 16.42 FT |
| T-2 | 11+70.69 | 15.36 FT | T-15 | 13+58.45 | 16.22 FT | T-28 | 15+67.70 | 16.41 FT |
| T-3 | 11+86.05 | 10.63 FT | T-16 | 13+74.67 | 16.44 FT | T-29 | 15+84.11 | 16.41 FT |
| T-4 | 11+96.68 | 10.20 FT | T-17 | 13+91.11 | 13.03 FT | T-30 | 16+00.52 | 16.41 FT |
| T-5 | 12+06.88 | 20.13 FT | T-18 | 14+04.14 | 19.94 FT | T-31 | 16+16.93 | 16.41 FT |
| T-6 | 12+27.19 | 10.42 FT | T-19 | 14+24.08 | 16.40 FT | T-32 | 16+33.34 | 16.66 FT |
| T-7 | 12+37.61 | 10.50 FT | T-20 | 14+40.48 | 16.40 FT | T-33 | 16+50.00 | 16.67 FT |
| T-8 | 12+48.11 | 20.13 FT | T-21 | 14+56.88 | 12.69 FT | T-34 | 16+66.67 | 19.78 FT |
| T-9 | 12+68.24 | 16.26 FT | T-22 | 14+69.57 | 16.44 FT | T-35 | 16+86.45 | 12.81 FT |
| T-10 | 12+84.50 | 16.58 FT | T-23 | 14+86.01 | 19.99 FT | T-36 | 16+99.26 | 16.49 FT |
| T-11 | 13+01.08 | 16.21 FT | T-24 | 15+06.00 | 12.47 FT | T-37 | 17+15.72 | 14.14 FT |
| T-12 | 13+17.29 | 16.44 FT | T-25 | 15+18.47 | 16.40 FT | T-38 | 17+29.86 | |
| T-13 | 13+33.73 | 8.09 FT | T-26 | 15+34.87 | 16.41 FT | | | |

SEE NOTE ON S-13

## TIEBACK STATION LOCATIONS (1)

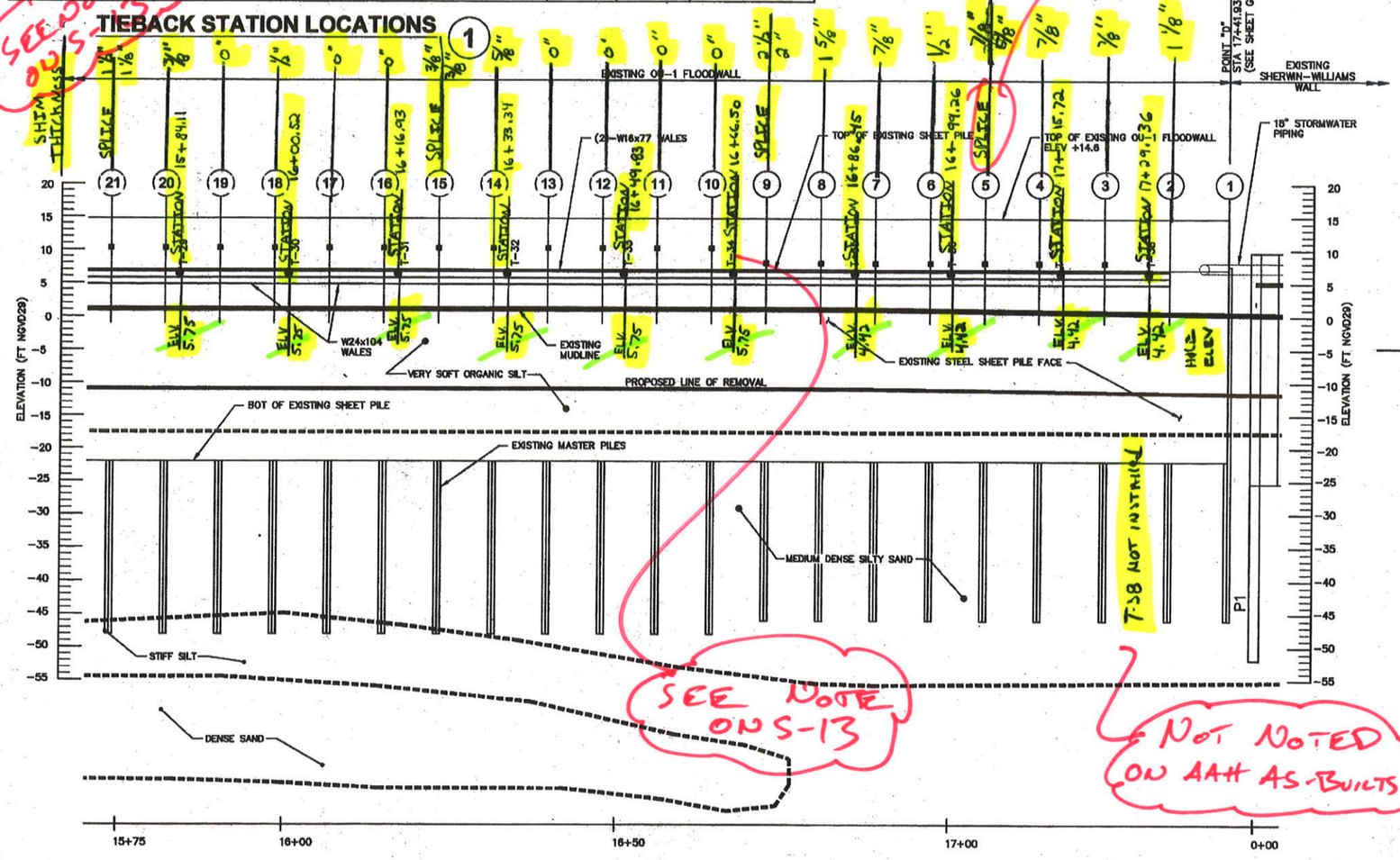


T-8 NOT INSTALL

SEE NOTE ON S-13

NOT NOTED ON AAH AS-BUILTS

## ELEVATIONS STA 15+75 TO 17+50

1"=10'-0"

NOTE: ALL SOIL DELINEATIONS ARE ESTIMATED FROM AVAILABLE BORING INFORMATION AND SHOULD BE CONSIDERED APPROXIMATE.

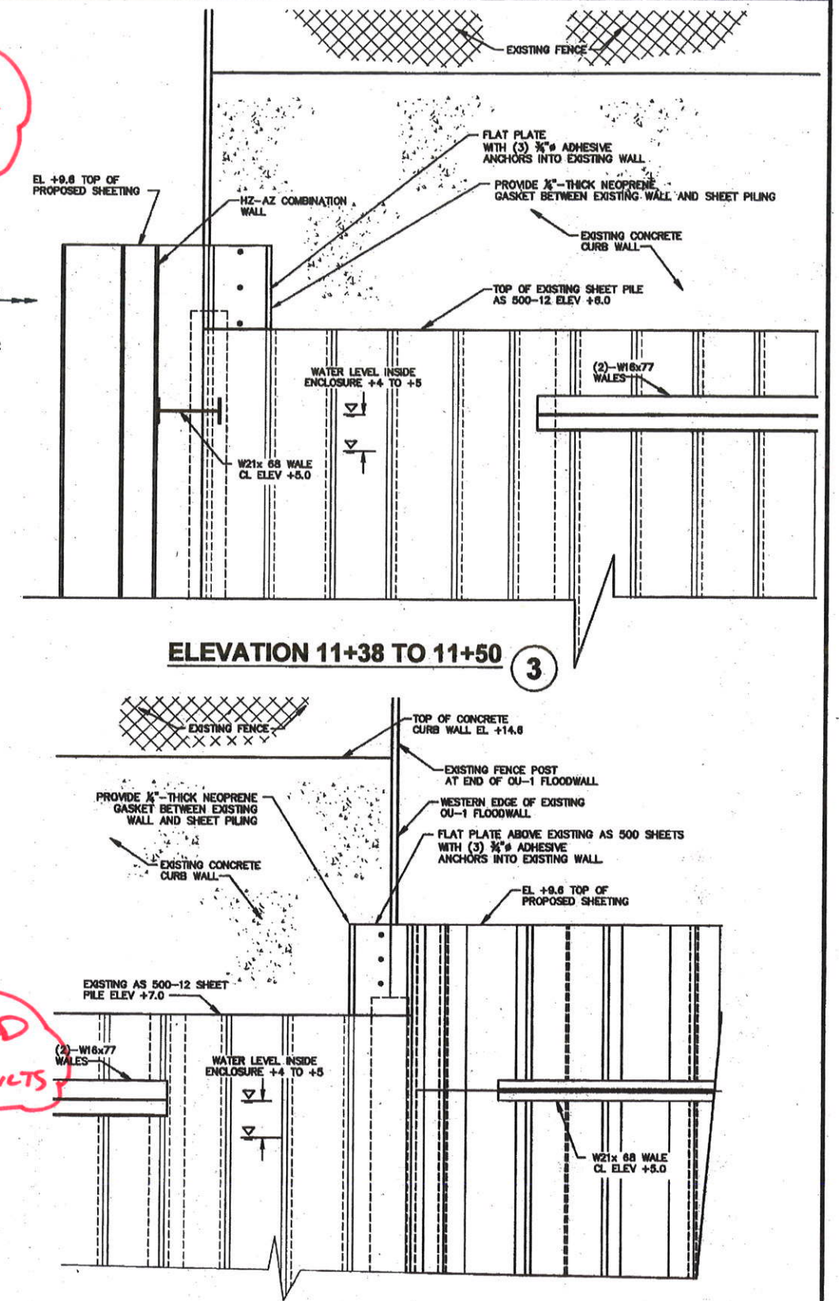


## ELEVATION 11+38 TO 11+50 (3)

## ELEVATION 17+25 TO 0+00 (2)

XREFS: 09961X00 XBASEPLEELEV XVERTBARSMIR XVERTBARS XWEIRGATE XSOILBORTBOR XSOILBORTT XSOILDELINEATION

IMAGES: PROJECTNAME: -

CITY: TOLEDO-OH DIVGROUP: DB:A.HUNT LD: PIC:R. ROMAGNOLI PM:R. ROMAGNOLI TM:R. ROMAGNOLI LYR: ON=*;OFF=*REF
10H:\SFP01\Data\Projects\B0009961.0000\Drawings\S-15 ELEV 1575 1750.dwg LAYOUT: ENCLOSURE WALL SAVED: 6/30/2011 12:44 PM ACADVER: 18.0S (LMS TECH) PAGESETUP: PDF 22X34 2010 VERSION DWG TO PDF.PC3 PLOTSTYLETABLE: PLTCONT.CTB PLOTTED: 7/1/2011 3:48 PM BY: HUNT, AARON

0 10' 20' 30'
1"=10'

THIS BAR REPRESENTS ONE INCH ON THE ORIGINAL DRAWING: USE TO VERIFY FIGURE REPRODUCTION SCALE

| No. | Date | Revisions | By | Chk |
|---|---|---|---|---|

THIS DRAWING IS THE PROPERTY OF THE ARCADIS ENTITY IDENTIFIED IN THE TITLE BLOCK AND MAY NOT BE REPRODUCED OR ALTERED IN WHOLE OR IN PART WITHOUT THE EXPRESS WRITTEN PERMISSION OF SAME.

Professional Engineer's Name: AARON A HUNT
Professional Engineer's No.: 24GE04804300
State: NJ | Date Signed: | Project Mgr.: RAR
Designed by: AAH | Drawn by: AAH | Checked by: RAK

7/5/2011

ARCADIS
ARCADIS U.S., INC.
NEW JERSEY ENGINEERING CERTIFICATE OF AUTHORIZATION NUMBER 24GA27939600

TIERRA SOLUTIONS, INC. • LOWER PASSAIC RIVER, NEWARK, NJ
PHASE I CERCLA NON-TIME-CRITICAL REMOVAL ACTION

# ENCLOSURE ELEVATIONS STA 15+75 TO 17+50

STRUCTURAL

ARCADIS Project No. B0009964.0001
Date: JULY 2011
ARCADIS
6723 TOWPATH ROAD
BOX 66
SYRACUSE, NY 13214
TEL: 315.446.9120

S-15

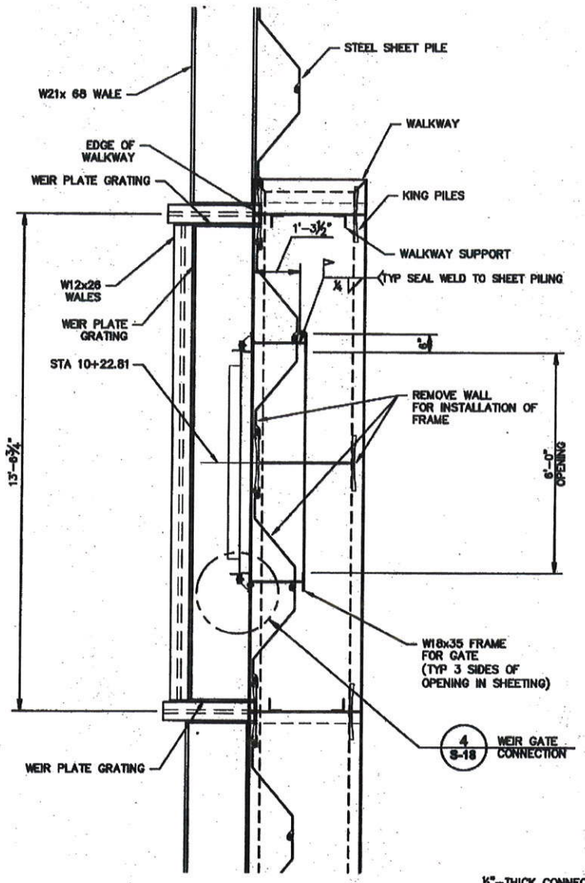


## WEIR GATE PLAN 1

SCALE: ½"=1'-0"

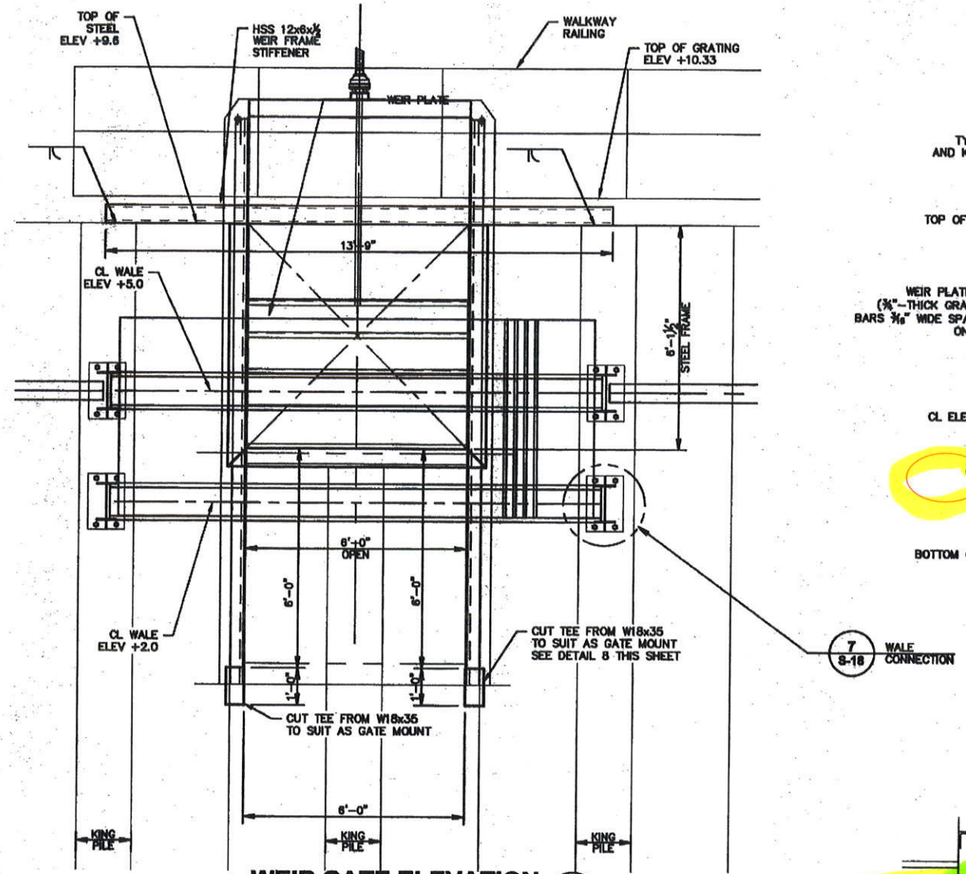


## WEIR GATE ELEVATION 2

1/2"=1'-0"

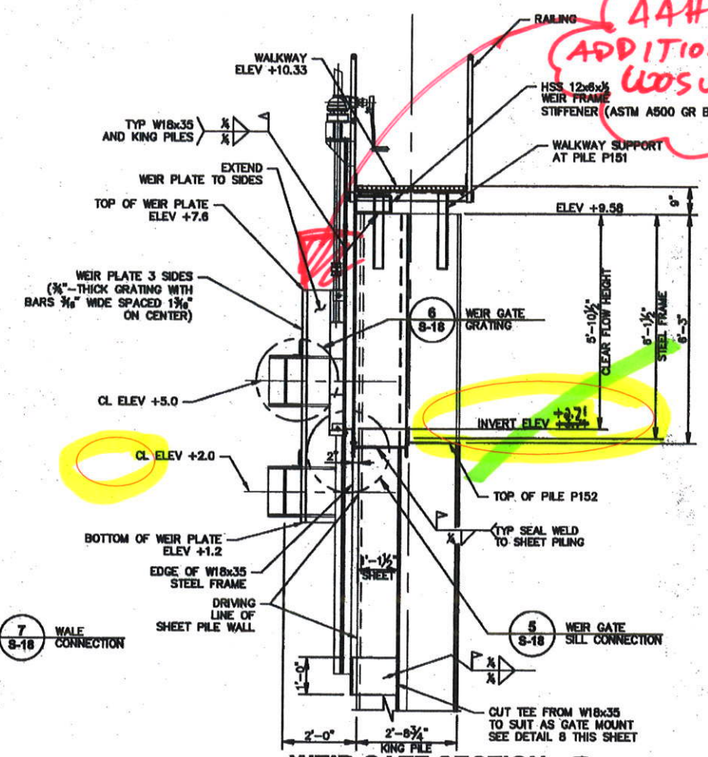


## WEIR GATE SECTION 3

SCALE: ½"=1'-0"

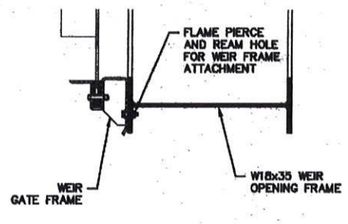


## WEIR GATE SIDE CONNECTION 4

SCALE: 1 ½"=1'-0"

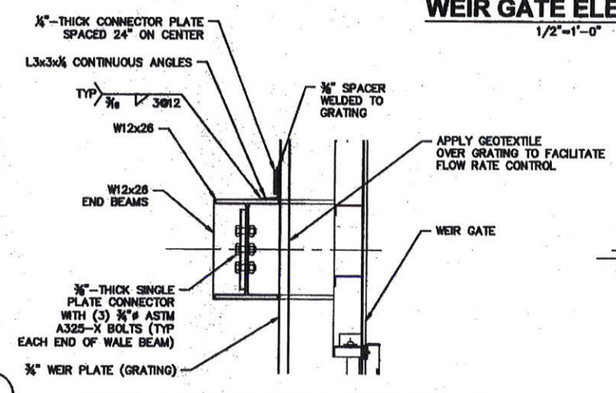


## WEIR GATE GRATING MOUNT 6

SCALE: 1"=1'-0"

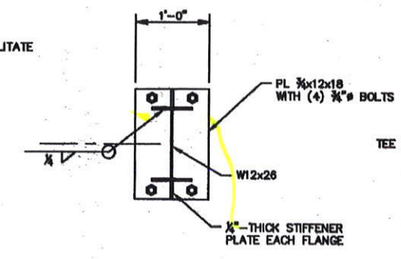


## CONNECTION DETAIL 7

SCALE: 1"=1'-0"

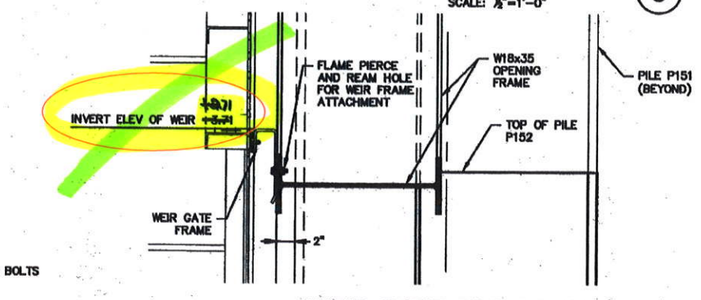


## WEIR GATE SILL CONNECTION 5

SCALE: 1 ½"=1'-0"

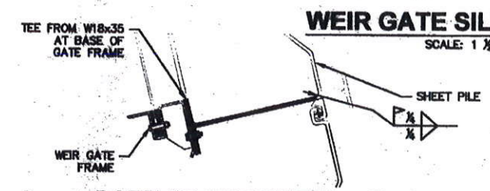


## GATE FRAME STEEL 8

SCALE: 1 ½"=1'-0"

CITY: TOLEDO-OH DIV/GROUP: DSA HUNT LD: PICR: ROMAGNOLI PM:R: ROMAGNOLI TM:R: ROMAGNOLI LYR: ON=*;OFF=*REF
IC\H:\2FP01\Data\Projects\B0009961.0000\Drawings\S-18 WEIR GATE.dwg LAYOUT: DET3 SAVED: 6/30/2011 12:46 PM ACADVER: 18.0S (LMS TECH) PAGESETUP: PDF 22/24 2010 VERSION.DWG TO PDF.PC3 PLOTSTYLETABLE: PLTCONT.CTB PLOTTED: 7/1/2011 3:46 PM BY: HUNT, AARON

XREFS: 09961X00-AAHPE, 09961X00, wallway/Plan, shaeple, XWEIRGATEELEV, XWEIRGATE, xwellsec, XWEIRPLAN, XWEIRSEC
IMAGES:
PROJECTNAME: -

THIS BAR REPRESENTS ONE INCH ON THE ORIGINAL DRAWING: USE TO VERIFY FIGURE REPRODUCTION SCALE

| No. | Date | Revisions | By | Ckd |
|---|---|---|---|---|

THIS DRAWING IS THE PROPERTY OF THE ARCADIS ENTITY IDENTIFIED IN THE TITLE BLOCK AND MAY NOT BE REPRODUCED OR ALTERED, IN WHOLE OR IN PART WITHOUT THE EXPRESS WRITTEN PERMISSION OF SAME.

Professional Engineer's Name: AARON A HUNT
Professional Engineer's No.: 24GE04804300

| State | Date Signed | Project Mgr. |
|---|---|---|
| NJ | | RAR |
| Designed by AAH | Drawn by AAH | Checked by RAK |

ARCADIS
ARCADIS U.S., INC.
NEW JERSEY ENGINEERING CERTIFICATE OF AUTHORIZATION NUMBER 24GA27939600

TIERRA SOLUTIONS, INC. • LOWER PASSAIC RIVER, NEWARK, NJ
PHASE I CERCLA NON-TIME-CRITICAL REMOVAL ACTION

# WEIR GATE FRAMING

STRUCTURAL

ARCADIS Project No. B0009964.0001
Date JULY 2011
ARCADIS
6723 TOWPATH ROAD
BOX 66
SYRACUSE, NY 13214
TEL: 315.446.9120

S-18

| SAND VERTICES | | | ARMOR MATTRESS VERTICES | | |
|---|---|---|---|---|---|
| POINT | NORTHING | EASTING | POINT | NORTHING | EASTING |
| "S–1" | 695029.033 | 593399.021 | "A–1" | 695023.929 | 593369.395 |
| "S–2" | 695048.598 | 593394.344 | "A–2" | 695027.871 | 593394.158 |
| "S–3" | 695138.078 | 593517.297 | "A–3" | 695114.133 | 593373.540 |
| "S–4" | 695172.667 | 593594.380 | "A–4" | 695119.944 | 593397.855 |
| "S–5" | 695258.361 | 593574.263 | "A–5" | 695217.205 | 593374.608 |
| "S–6" | 695262.410 | 593456.422 | "A–6" | 695194.887 | 593277.130 |
| "S–7" | 695243.294 | 593347.191 | "A–7" | 695170.518 | 593282.710 |
| "S–8" | 695164.545 | 593078.311 | "A–8" | 695023.369 | 592639.991 |
| "S–9" | 695055.179 | 592707.647 | "A–9" | 695047.736 | 592634.412 |
| "S–10" | 695052.610 | 592633.296 | "A–10" | 695025.418 | 592536.935 |
| "S–11" | 695030.292 | 592535.819 | "A–11" | 694928.279 | 592560.765 |
| "S–12" | 695005.461 | 592495.035 | "A–12" | 694933.627 | 592585.194 |
| "S–13" | 694985.225 | 592444.041 | "A–13" | 694876.822 | 592599.129 |
| "S–14" | 694937.292 | 592449.365 | "A–14" | 694881.773 | 592623.656 |
| "S–15" | 694913.733 | 592497.672 | | | |
| "S–16" | 694895.629 | 592589.368 | | | |
| "S–17" | 694875.631 | 592594.273 | | | |

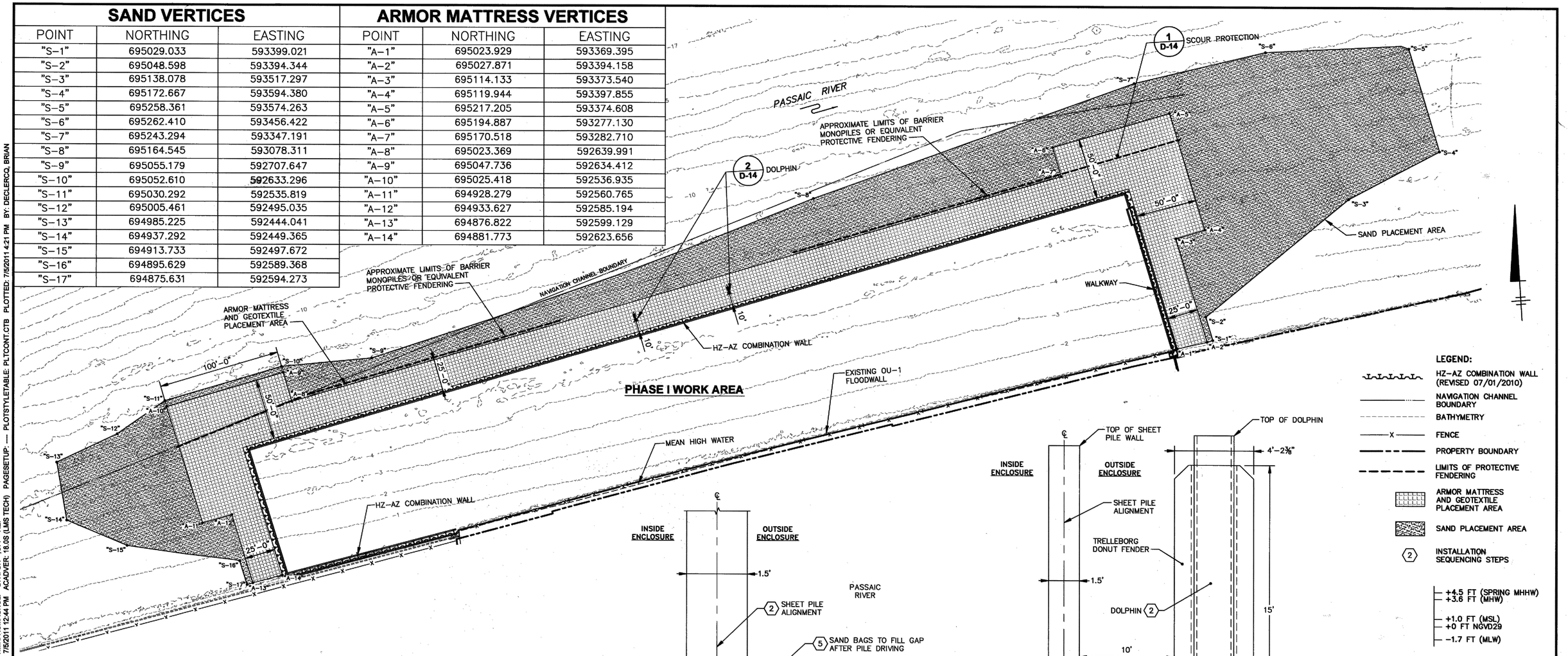


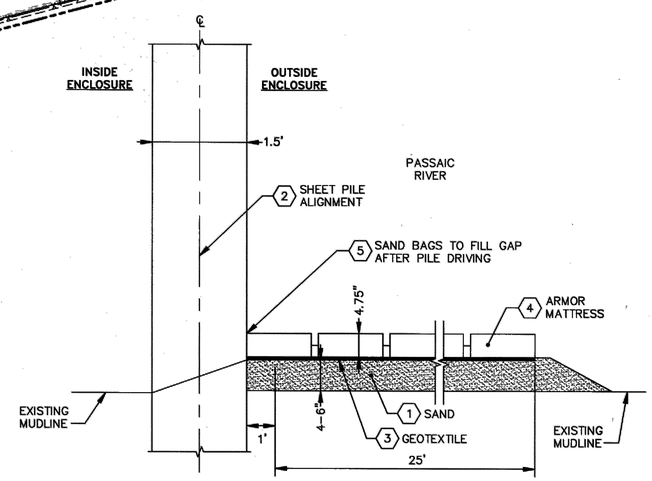


## SCOUR PROTECTION INSTALLATION:

1. PLACE A 4"–6" LAYER OF SAND ACROSS SAND PLACEMENT AREA
2. INSTALL HZ–AZ COMBINATION WALL ALONG SHEET PILE ALIGNMENT
3. PLACE GEOTEXTILE WITHIN ARMOR MATTRESS FOOTPRINT
4. PLACE ARMOR MATTRESSES
5. FILL GAPS BETWEEN ARMOR MATTRESSES AND HZ–AZ COMBINATION WALL WITH SAND BAGS OR EQUIVALENT.

## SCOUR PROTECTION (1)

NOT TO SCALE

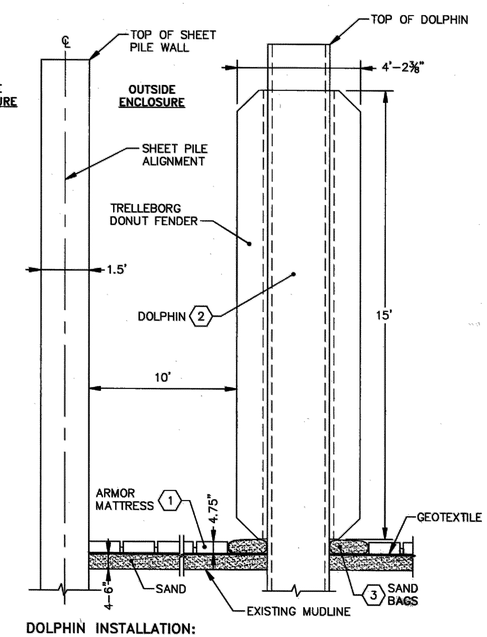


## DOLPHIN INSTALLATION:

1. CUT OR OTHERWISE DISCONNECT CONCRETE BLOCK UNITS FROM THE ARMOR MATTRESS AT PROPOSED DOLPHIN LOCATIONS PROVIDING SUFFICIENT CLEARANCE FOR INSTALLATION OF THE DOLPHIN.
2. INSTALL DOLPHIN AND TRELLEBORG DONUT FENDER OR EQUIVALENT.
3. FILL GAPS BETWEEN ARMOR MATTRESS AND DOLPHIN WITH SAND BAGS OR EQUIVALENT.

## DOLPHIN INSTALLATION (2)

NOT TO SCALE

**LEGEND:**

- HZ–AZ COMBINATION WALL (REVISED 07/01/2010)
- NAVIGATION CHANNEL BOUNDARY
- BATHYMETRY
- FENCE
- PROPERTY BOUNDARY
- LIMITS OF PROTECTIVE FENDERING
- ARMOR MATTRESS AND GEOTEXTILE PLACEMENT AREA
- SAND PLACEMENT AREA
- (2) INSTALLATION SEQUENCING STEPS
- +4.5 FT (SPRING MHHW)
- +3.6 FT (MHW)
- +1.0 FT (MSL)
- +0 FT NGVD29
- –1.7 FT (MLW)

**NOTES:**

1. SURVEY SPOT ELEVATIONS WERE PROVIDED BY DPK CONSULTING, LLC DATED 2009.
2. BATHYMETRY DATA ARE FROM OCEAN SURVEYS, INC. DATED 06/30/2009; REVISED 09/15/2009. GAPS IN BATHYMETRY DATA ARE DUE TO SHALLOW WATER DEPTH AREAS WHERE FULL MULTIBEAM COVERAGE WAS NOT ATTAINABLE.
3. QUANTITIES OF SCOUR PROTECTION MATERIAL PROVIDED IN ENCLOSURE DESIGN CRITERIA ON DRAWING G–3.

CITY: SYRACUSE DIV/GROUP: 141 DB: GMS LD:(Opt) PIC:R. ROMAGNOLI PM:R. ROMAGNOLI TM:R. ROMAGNOLI LYR: ON=*;OFF=*REF
G:\ENVCAD\SYRACUSE\ACT\B0009964\0011\29113\CONTRACT\09961D14.dwg LAYOUT: D-14 SAVED: 7/5/2011 12:44 PM ACADVER: 18.0S (LMS TECH) PAGESETUP: --- PLOTSTYLETABLE: PLTCONT.CTB PLOTTED: 7/5/2011 4:21 PM BY: DECLERCQ, BRIAN

XREFS: 09961X00 baseline sheetpile sheetpilewallplan 09961X02 09964XL1 monopiles mattress
IMAGES:
PROJECTNAME: ---

40' 0 40' 80'
1"=40'

THIS BAR REPRESENTS ONE INCH ON THE ORIGINAL DRAWING:

USE TO VERIFY FIGURE REPRODUCTION SCALE

| No. | Date | Revisions | By | Ckd |
|---|---|---|---|---|

THIS DRAWING IS THE PROPERTY OF THE ARCADIS ENTITY IDENTIFIED IN THE TITLE BLOCK AND MAY NOT BE REPRODUCED OR ALTERED IN WHOLE OR IN PART WITHOUT THE EXPRESS WRITTEN PERMISSION OF SAME.

Professional Engineer's Name: ROBERT ROMAGNOLI
Professional Engineer's No.: 24GE04659400
State: NJ | Date Signed: 7/5/11 | Project Mgr.: RAR
Designed by: APC | Drawn by: BKD | Checked by: JRB

ARCADIS
ARCADIS U.S., INC.
NEW JERSEY ENGINEERING CERTIFICATE OF AUTHORIZATION NUMBER 24GA27939600

TIERRA SOLUTIONS, INC. • LOWER PASSAIC RIVER, NEWARK, NJ
PHASE I CERCLA NON-TIME-CRITICAL REMOVAL ACTION

# ENCLOSURE SCOUR PROTECTION PLAN AND SECTIONS

DREDGING AND BACKFILL

ARCADIS Project No. B0009964.0001
Date JULY 2011
ARCADIS 6723 TOWPATH ROAD BOX 66 SYRACUSE, NY 13214 TEL: 315.446.9120

D-14

## ENCLOSURE VERTICES

| POINT | NORTHING | EASTING | STATION |
|---|---|---|---|
| "A" | N = 694986.257 | E = 592601.821 | 2+51.44 |
| "B" | N = 695153.987 | E = 593334.420 | 10+03.00 |
| "C" | N = 695022.635 | E = 593365.814 | 11+38.05 |
| "D" | N = 694909.960 | E = 592770.504 | 17+43.97 |
| "E" | N = 694907.886 | E = 592770.935 | 17+46.08 |
| "F" | N = 694879.493 | E = 592628.012 | 1+41.52 |

## GATE VERTEX

| POINT | NORTHING | EASTING | STATION |
|---|---|---|---|
| "G" | N = 695134.721 | E = 593339.025 | 10+22.81 |

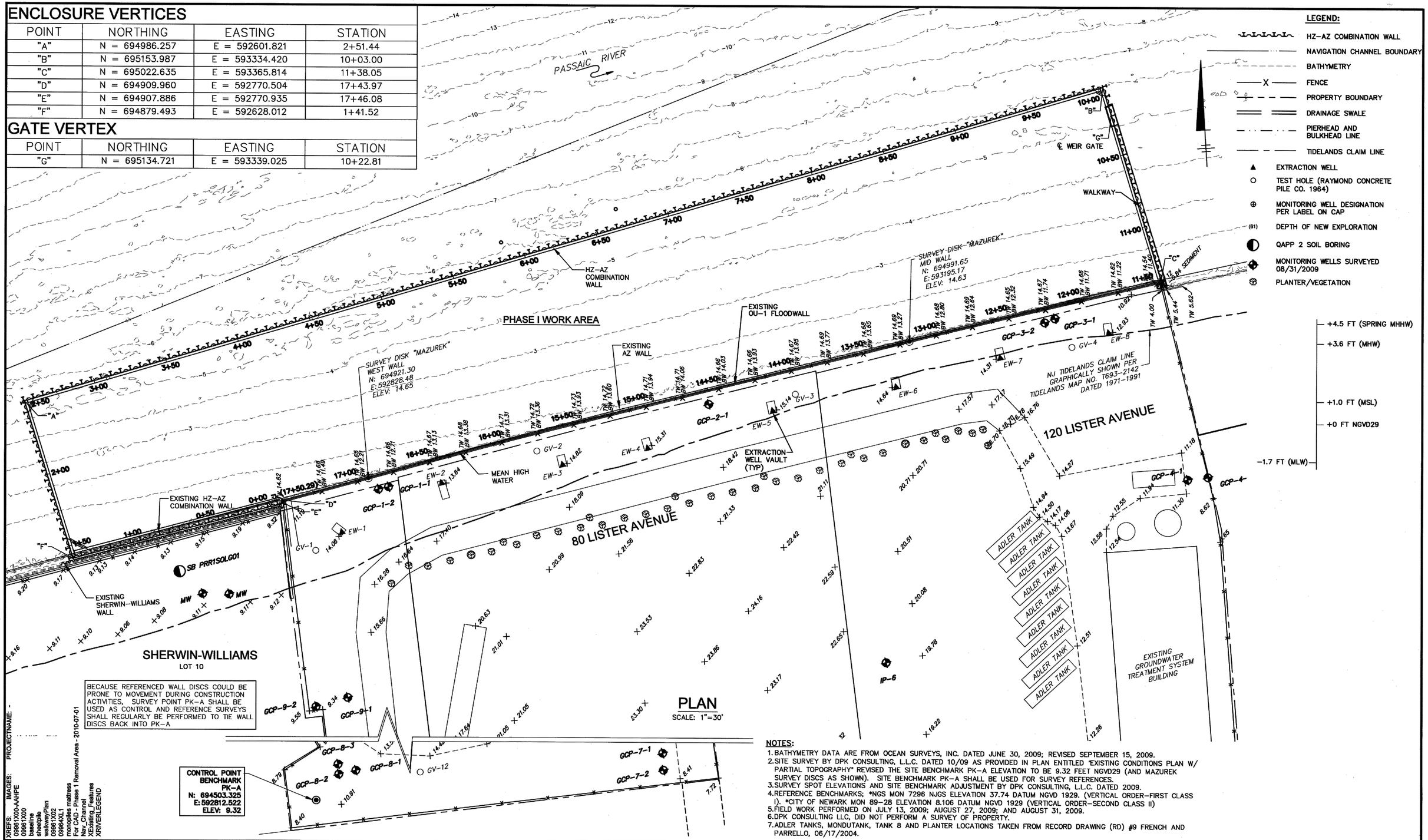


**NOTES:**

1. BATHYMETRY DATA ARE FROM OCEAN SURVEYS, INC. DATED JUNE 30, 2009; REVISED SEPTEMBER 15, 2009.
2. SITE SURVEY BY DPK CONSULTING, L.L.C. DATED 10/09 AS PROVIDED IN PLAN ENTITLED "EXISTING CONDITIONS PLAN W/ PARTIAL TOPOGRAPHY" REVISED THE SITE BENCHMARK PK-A ELEVATION TO BE 9.32 FEET NGVD29 (AND MAZUREK SURVEY DISCS AS SHOWN). SITE BENCHMARK PK-A SHALL BE USED FOR SURVEY REFERENCES.
3. SURVEY SPOT ELEVATIONS; AND SITE BENCHMARK ADJUSTMENT BY DPK CONSULTING, L.L.C. DATED 2009.
4. REFERENCE BENCHMARKS; *NGS MON 7296 NJGS ELEVATION 37.74 DATUM NGVD 1929. (VERTICAL ORDER-FIRST CLASS I). *CITY OF NEWARK MON 89-28 ELEVATION 8.106 DATUM NGVD 1929 (VERTICAL ORDER-SECOND CLASS II)
5. FIELD WORK PERFORMED ON JULY 13, 2009; AUGUST 27, 2009; AND AUGUST 31, 2009.
6. DPK CONSULTING LLC, DID NOT PERFORM A SURVEY OF PROPERTY.
7. ADLER TANKS, MONDUTANK, TANK 8 AND PLANTER LOCATIONS TAKEN FROM RECORD DRAWING (RD) #9 FRENCH AND PARRELLO, 06/17/2004.

0 30' 60' 90'
1"=30'

THIS BAR REPRESENTS ONE INCH ON THE ORIGINAL DRAWING: USE TO VERIFY FIGURE REPRODUCTION SCALE

| No. | Date | Revisions | By | Ckd |
|---|---|---|---|---|

THIS DRAWING IS THE PROPERTY OF THE ARCADIS ENTITY IDENTIFIED IN THE TITLE BLOCK AND MAY NOT BE REPRODUCED OR ALTERED IN WHOLE OR IN PART WITHOUT THE EXPRESS WRITTEN PERMISSION OF SAME.

Professional Engineer's Name: ROBERT ROMAGNOLI
Professional Engineer's No.: 24GE04659400
State: NJ | Date Signed: 7/5/11 | Project Mgr.: RAR
Designed by: APC | Drawn by: AAH | Checked by: JRB

ARCADIS
ARCADIS U.S., INC.
NEW JERSEY ENGINEERING CERTIFICATE OF AUTHORIZATION NUMBER 24GA27939600

TIERRA SOLUTIONS, INC. • LOWER PASSAIC RIVER, NEWARK, NJ
PHASE I CERCLA NON-TIME-CRITICAL REMOVAL ACTION

# PHASE I WORK AREA/OU-1 SITE STATIONING AND SURVEY CONTROL PLAN

GENERAL

ARCADIS Project No. B0009964.0001
Date JULY 2011
ARCADIS 6723 TOWPATH ROAD BOX 66 SYRACUSE, NY 13214 TEL: 315.446.9120

G-4

CITY: TOLEDO-OH DIV/GROUP: DB:A. HUNT LD: PIC:R. ROMAGNOLI PM:R. ROMAGNOLI TM:R. ROMAGNOLI LYR: ON=*;OFF=*REF
WOH03FP01\Data\Project\B0009961.0000\Drawing\SURVCNTRL.dwg LAYOUT: SURVEY CONTROL PLAN SAVED: 6/30/2011 12:26 PM ACADVER: 18.0S (LMS TECH) PAGESETUP: PDF 22X34 2010 VERSION DWG TO PDF.PC3 PLOTSTYLETABLE: PLTCONT.CTB PLOTTED: 6/30/2011 1:04 PM BY:
HUNT, AARON
XREFS: 09961X00-AAHPE 09961X00 baseline bathymetry walkway Plan 09981X02 09984XL1 monopiles mattress For CAD - Phase 1 Removal Area - 2010-07-01 Nav_Channel XExisting_Features XRIVERLEGEND
IMAGES: PROJECTNAME: -

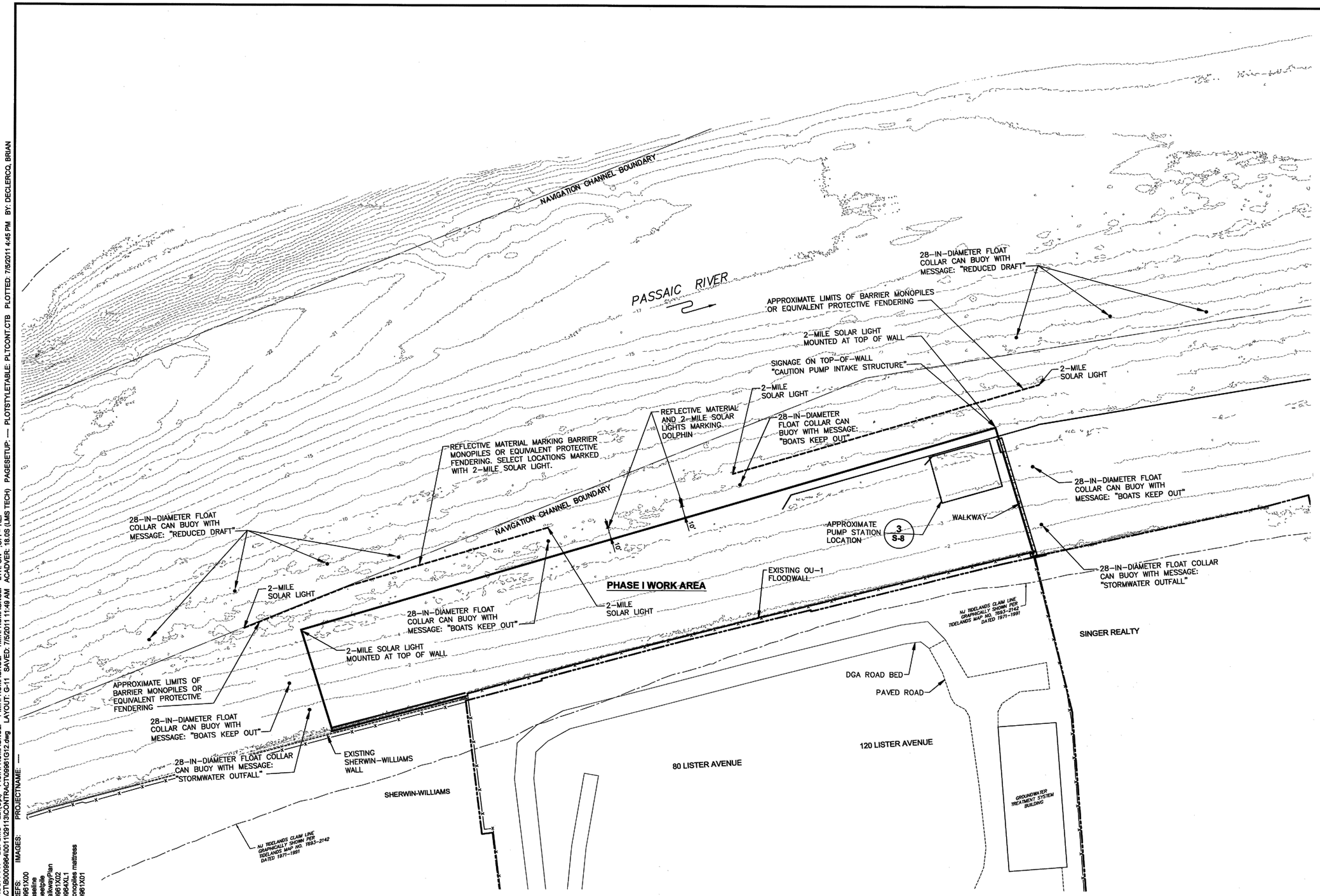


**LEGEND:**

- PIPELINE ALIGNMENT
- PHASE I WORK AREA (REVISED 07/01/2010)
- NAVIGATION CHANNEL BOUNDARY
- BATHYMETRY
- FENCE
- PROPERTY BOUNDARY
- DRAINAGE SWALE
- PIERHEAD AND BULKHEAD LINE
- TIDELANDS CLAIM LINE
- EXISTING STRUCTURE
- LIMITS OF PROTECTIVE FENDERING

+4.5 FT (SPRING MHHW)
+3.6 FT (MHW)
+1.0 FT (MSL)
+0 FT NGVD29
-1.7 FT (MLW)

**NOTES:**

1. BATHYMETRY DATA ARE FROM OCEAN SURVEYS, INC. DATED 06/30/2009; REVISED 09/15/2009.
2. UPLAND TOPOGRAPHY AND EXISTING FEATURES WERE TAKEN FROM SHEET NO. 9 OF THE FINAL SITE CONDITIONS PLAN SUBMITTED BY FRENCH AND PARRELLO ASSOCIATES ON 06/17/2004.
3. SURVEY SPOT ELEVATIONS WERE PROVIDED BY DPK CONSULTING, L.L.C. DATED 2009.
4. ALL LIGHTS, SIGNAGE, AND OTHER NAVIGATIONAL AIDS WILL BE APPROVED BY THE USCG PRIOR TO INSTALLATION.

CITY: SYRACUSE DIV/GROUP: 141 DB: GMS LD:(Opt) PIC:R. ROMAGNOLI PM:R. ROMAGNOLI TM:R. ROMAGNOLI LYR: ON=*;OFF=*REF
G:\ENVCAD\SYRACUSE\ACT\B0009964\00111\29113\CONTRACT\09961G12.dwg LAYOUT: G-11 SAVED: 7/5/2011 11:49 AM ACADVER: 18.0S (LMS TECH) PAGESETUP: ---- PLOTSTYLETABLE: PLTCONT.CTB PLOTTED: 7/5/2011 4:45 PM BY: DECLERCQ, BRIAN

PROJECTNAME: ----

IMAGES: 09961X00 baseline sheetpile walkwayPlan 09961X02 09964XL1 monopiles mattress 09961X01

XREFS:

1"=50' 50' 0 50' 100'

THIS BAR REPRESENTS ONE INCH ON THE ORIGINAL DRAWING:

USE TO VERIFY FIGURE REPRODUCTION SCALE

| No. | Date | Revisions | By | Ckd |
|---|---|---|---|---|

THIS DRAWING IS THE PROPERTY OF THE ARCADIS ENTITY IDENTIFIED IN THE TITLE BLOCK AND MAY NOT BE REPRODUCED OR ALTERED IN WHOLE OR IN PART WITHOUT THE EXPRESS WRITTEN PERMISSION OF SAME.

Professional Engineer's Name: ROBERT ROMAGNOLI
Professional Engineer's No.: 24GE04659400

| State | Date Signed | Project Mgr. |
|---|---|---|
| NJ | 7/5/11 | RAR |
| Designed by APC | Drawn by BKD | Checked by JRB |

ARCADIS

ARCADIS U.S., INC.
NEW JERSEY ENGINEERING CERTIFICATE OF AUTHORIZATION NUMBER 24GA27939600

TIERRA SOLUTIONS, INC. • LOWER PASSAIC RIVER, NEWARK, NJ
PHASE I CERCLA NON-TIME-CRITICAL REMOVAL ACTION

# AIDS TO NAVIGATION

GENERAL

ARCADIS Project No. B0009964.0001

Date JULY 2011

ARCADIS
6723 TOWPATH ROAD
BOX 66
SYRACUSE, NY 13214
TEL: 315.446.9120

G-11

## NOTES:

### COORDINATION:

THE CONTRACTOR SHALL VERIFY ALL DIMENSIONS AND LOCATIONS OF EQUIPMENT AND OPENINGS BEFORE PROCEEDING WITH THE WORK.

### SPECIFICATIONS FOR STRUCTURAL STEEL WORK:

MATERIALS

STRUCTURAL STEEL CHANNELS, ANGLES, AND PLATES: ASTM A36.

STRUCTURAL WIDE FLANGES: ASTM A992.

STRUCTURAL TUBING: ASTM A500, GRADE B.

BOLTS, NUTS, AND WASHERS: ASTM A325 BOLTS; ASTM A563 NUTS, BLACK, UNPAINTED.

WELDING MATERIALS: AWS D1.1; TYPE REQUIRED FOR MATERIALS BEING WELDED.

FABRICATION

SHOP DRAWINGS SHALL BE PROVIDED IN ACCORDANCE WITH INDUSTRY STANDARDS, INCLUDING FULL FABRICATION DRAWINGS.

SHOP JOINTS SHALL BE WELDED. CONTINUOUSLY SEAL JOINED MEMBERS BY CONTINUOUS WELDS. GRIND EXPOSED WELDS SMOOTH.

FABRICATE CONNECTIONS FOR BOLT, NUT, AND WASHER CONNECTORS UNLESS NOTED OTHERWISE.

BURNING HOLES AND NOTCHES IN MEMBERS WILL NOT BE PERMITTED, EXCEPT WHEN AUTHORIZED IN WRITING BY ENGINEER.

THE CONTACT SURFACES OF JOINTS SHALL BE FREE OF OIL, PAINT, OR ANY FOREIGN MATTER.

FINISH

OU-1 FLOODWALL WALES, PLATES, AND ASSOCIATED STEEL: HOT-DIP GALVANIZE STEEL AFTER FABRICATION TO ASTM A-123. APPLY TWO COATS OF COLD GALVANIZING COMPOUND TO ALL FIELD WELDS AND DAMAGED AREAS.

PLATES, RAILINGS, CHANNELS, ANGLES, AND BEAM NOT PART OF OU-1 FLOODWALL SHALL RECEIVE TWO COATS OF PRIMER PER SPECIFICATION 05 12 00.

ALLOW FOR ERECTION LOADS AND FOR SUFFICIENT TEMPORARY BRACING TO MAINTAIN STRUCTURE SAFE, PLUMB, AND IN TRUE ALIGNMENT UNTIL COMPLETION OF ERECTION AND INSTALLATION OF PERMANENT BRACING.

AS PART OF THE WELD PREP FOR EXISTING STEEL MEMBERS, REMOVE EXISTING PAINT WITH A CHEMICAL PAINT REMOVER. NO ABRASIVE GRINDING OR WIRE BRUSHING IS PERMITTED. REMOVE PAINT A MINIMUM OF 4 IN. AWAY FROM ALL PROPOSED WELDS WITH PEEL-AWAY SMART STRIP BY PAINT REMOVAL LLC, OR AS APPROVED BY THE ENGINEER.

FIELD-WELD COMPONENTS AS INDICATED ON DRAWINGS OR SHOP DRAWINGS.

FIELD-CONNECT MEMBERS WITH THREADED FASTENERS; TORQUE TO REQUIRED RESISTANCE. CONNECTIONS SHALL DEVELOP FULL STRENGTH OF MEMBERS, UNLESS NOTED OTHERWISE.

DO NOT FIELD-CUT OR ALTER STRUCTURAL MEMBERS WITHOUT APPROVAL BY THE ENGINEER.

SPECIFICATIONS FOR ANCHORAGE:

ALL THREAD RODS FOR ADHESIVE ANCHORS:
ASTM F1554 GRADE 36.

ADHESIVE ANCHORS:
RAMSET/RED HEAD, EPCON SYSTEM, CERAMIC 6 EPOXY.
SIMPSON STRONG TIE, EPOXY TIE SET.
OR AS APPROVED.

INJECTION GEL:
TWO-COMPONENT STRUCTURAL EPOXY.
COMPLY WITH ASTM C881.

### SPECIFICATIONS FOR STAIRS, RAILINGS, AND WALKWAY:

MATERIALS – STAIRS AND WALKWAY

EXPOSED MECHANICAL FASTENINGS: FLUSH COUNTERSUNK SCREWS OR BOLTS; CONSISTENT WITH DESIGN OF STAIR STRUCTURE.

GRATINGS: WELDED STEEL BAR GRATING, ASTM A36 WITH NON-SLIP NOSING ON STAIR TREADS. THICKNESS: 1½ IN.

BEARING BARS: 3/16 INCH SPACED 1 3/16 INCHES ON CENTER.

MATERIALS – RAILINGS

POSTS: STEEL PIPE 1½ INCHES IN DIAMETER, SCHEDULE 80, SINGLE UNSPLICED LENGTH SPACE 8'-0" FT ON CENTER MAXIMUM.

RAILS: STEEL PIPE 1½ INCHES IN DIAMETER, SCHEDULE 40.

TOP RAIL: CONTINUOUS WHEREVER POSSIBLE, ATTACHED TO A MINIMUM OF THREE POSTS.

LOWER RAILS: SINGLE UNSPLICED LENGTH BETWEEN POSTS.

MAKE PROVISIONS FOR EXPANSION AND CONTRACTION OF TOP RAILS AND TOE PLATE. EXPANSION JOINTS SHALL BE PLACED AT MAXIMUM 25-FT INTERVALS.

WELD, MITER, AND GRIND SMOOTH ALL CONNECTIONS.

FABRICATION – GENERAL

FIT AND SHOP – ASSEMBLE COMPONENTS IN THE LARGEST PRACTICAL SECTIONS FOR DELIVERY TO THE SITE.

FABRICATE COMPONENTS WITH JOINTS TIGHTLY FITTED AND SECURED.

CONTINUOUSLY SEAL JOINED PIECES BY CONTINUOUS WELDS.

GRIND EXPOSED JOINTS FLUSH AND SMOOTH WITH ADJACENT FINISH SURFACE. MAKE EXPOSED JOINTS BUTT-TIGHT, FLUSH, AND HAIRLINE. EASE EXPOSED EDGES TO SMALL UNIFORM RADIUS.

EXPOSED MECHANICAL FASTENINGS: FLUSH COUNTERSUNK SCREWS OR BOLTS; UNOBTRUSIVELY LOCATED; CONSISTENT WITH DESIGN OF COMPONENT, UNLESS NOTED OTHERWISE.

SUPPLY COMPONENTS REQUIRED FOR ANCHORAGE OF FABRICATIONS. FABRICATE ANCHORS AND RELATED COMPONENTS OF SAME MATERIAL AND FINISH AS FABRICATION, UNLESS NOTED OTHERWISE

ACCURATELY FORM COMPONENTS REQUIRED FOR ANCHORAGE OF STAIRS AND LANDINGS TO EACH OTHER AND TO THE BUILDING STRUCTURE.

PROVIDE ANCHORS, BRACKETS, AND BOLTS REQUIRED FOR MOUNTING AND ANCHORING RAILINGS.

DRILL CONDENSATE DRAINAGE HOLES AT THE BOTTOM AND LOW POINT OF MEMBERS AT LOCATIONS THAT WILL NOT ENCOURAGE WATER INTRUSION.

MAKE EXPOSED JOINTS BUTT-TIGHT, FLUSH, AND HAIRLINE. EASE EXPOSED EDGES TO SMALL, UNIFORM RADIUS.

ACCURATELY FORM COMPONENTS TO SUIT STAIRS AND LANDINGS TO EACH OTHER AND TO STRUCTURE.

ACCOMMODATE FOR EXPANSION AND CONTRACTION OF MEMBERS AND STRUCTURES MOVEMENT WITHOUT DAMAGE TO CONNECTIONS OR MEMBERS.

FINISHES

HOT-DIP GALVANIZE ALL STEEL REMAINING IN CONTACT WITH THE OU-1 FLOODWALL AFTER FABRICATION TO ASTM A-123. APPLY TWO COATS OF COLD GALVANIZING COMPOUND TO ALL FIELD WELDS AND DAMAGED AREAS.

SEE SPECIFICATION 05 12 00 FOR PRIME-PAINTED STRUCTURES NOT IN CONTACT WITH THE OU-1 FLOODWALL.

### SPECIFICATIONS FOR WALKWAY LADDER AND SAFETY GATE:

WALKWAY LADDER AND SAFETY GATE

LADDER AND SELF-CLOSING SAFETY GATE IN ACCORDANCE WITH OSHA 29 CFR 1910.23 AND 1910.27. CONTRACTOR SHALL SUBMIT FABRICATION DRAWINGS OR MANUFACTURER INFORMATION PROVING OSHA CRITERIA MET.

GATE SPRINGS: TWO STAINLESS STEEL TORSION SPRINGS.
GATE WIDTH: 2'-0".
GATE FINISH: POWDER COATED STEEL OR HOT DIPPED GALVANIZED.
GATE MANUFACTURER: A-MEZZ INDUSTRIAL STRUCTURES, INC. MODEL MLG-24, OR AS APPROVED BY ENGINEER.

LADDER HEIGHT: FROM GRATING AT ELEV +10.33 TO WALE AT ELEV +5.0
LADDER SIDE RUNGS: STEEL ANGLE 2x2x¼.
LADDER RUNGS: ¾"ø CORRUGATED STEEL ROUND, SPACED 12"c/c MAXIMUM.
LADDER FINISH: POWDER COATED STEEL OR HOT DIPPED GALVANIZED.
LADDER MANUFACTURER: A-MEZZ INDUSTRIAL STRUCTURES, INC.

### SPECIFICATIONS FOR UPF CONCRETE WORK:

REINFORCING STEEL

REINFORCING STEEL: ASTM A615, 60 KSI YIELD GRADE, DEFORMED BILLET STEEL BARS, UNFINISHED; OR ASTM A616, 60 KSI YIELD GRADE, DEFORMED RAIL STEEL BARS, UNFINISHED.

CONCRETE MATERIALS AND ADMIXTURES

CEMENT: ASTM C150, TYPE I NORMAL PORTLAND TYPE.

FINE AND COARSE AGGREGATES: ASTM C33 (NORMAL WEIGHT AGGREGATE); MATERIALS CONTAINING DELETERIOUS SUBSTANCES (SPALLING CAUSING) ARE NOT ACCEPTABLE.

WATER: CLEAN AND NOT DETRIMENTAL TO CONCRETE.

AIR ENTRAINMENT: ASTM C260; MASTER BUILDERS MICRO-AIR, OR AS APPROVED.

CHEMICAL: ASTM C494 TYPE A – WATER-REDUCING, TYPE B – RETARDING, TYPE D – WATER-REDUCING AND RETARDING, TYPE F – WATER-REDUCING, HIGH RANGE, TYPE G – WATER-REDUCING, HIGH RANGE, AND RETARDING; CONTAINING NO CHLORIDES; MASTER BUILDERS, W.R. GRACE, OR AS APPROVED.

FLY ASH: ASTM C618 CLASS F OR C; LOSS ON IGNITION LESS THAN 3 PERCENT.

MEMBRANE CURING COMPOUND: ASTM C309, TYPE 1-D, CLASS B, CLEAR WITH FUGITIVE DYE THAT DISAPPEARS APPROXIMATELY 24 HR AFTER EXPOSURE TO SUNLIGHT; SPRAY-CURE SAFE CURE CLEAR, EUCLID CHEMICAL COMPANY KUREZ DR, OR AS APPROVED. WET CURING CONCRETE MAY BE SUBSTITUTED FOR CURING COMPOUND.

CONCRETE MIX

CONCRETE PROPORTIONS: COMPLY WITH ACI 301, 4.2.

CLASS I CONCRETE: PROVIDE CONCRETE TO THE FOLLOWING CRITERIA:
COMPRESSIVE STRENGTH (7 DAY): 3,200 PSI.
COMPRESSIVE STRENGTH (28 DAY): 4,000 PSI.
WATER/CEMENT RATIO (MAXIMUM): 0.45 BY WEIGHT.
AIR ENTRAINED: 6 PERCENT, +1 PERCENT.
FLY ASH CONTENT: MAXIMUM 25 PERCENT OF CEMENT CONTENT.
SLUMP (MAXIMUM): 3 INCHES (DUE TO WATER).
MID-OR HIGH-RANGE WATER REDUCER: ADD AT SITE TO INCREASE SLUMP AS NECESSARY FOR WORKABILITY.

### ABBREVIATIONS:

| | |
|---|---|
| @ | AT |
| ASTM | ASTM INTERNATIONAL |
| AWS | AMERICAN WELDING SOCIETY |
| B/W | BETWEEN |
| CL | COLUMN CENTER LINE |
| ℄ | CENTERLINE |
| CONC | CONCRETE |
| DEG | DEGREES |
| DWG | DRAWING |
| ø | DIAMETER |
| ELEV | ELEVATION |
| FT | FOOT/FEET |
| HSS | HOLLOW STRUCTURAL SECTION |
| HR | HOUR(S) |
| IN | INCH/INCHES |
| KSI | KIPS PER SQUARE INCH |
| LLV | LONG LEG VERTICAL |
| MAX | MAXIMUM |
| MHHW | MEAN HIGH HIGH WATER |
| MIN | MINIMUM |
| MLLW | MEAN LOW LOW WATER |
| MM | MILLIMETER |
| OU-1 | OPERABLE UNIT 1 |
| PSI | POUNDS PER SQUARE INCH |
| SCH | SCHEDULE |
| SSPC | THE SOCIETY FOR PROTECTIVE COATINGS |
| STA | STATION |
| TYP | TYPICAL |
| VERT | VERTICAL |
| NGVD29 | NATIONAL GEODETIC VERTICAL DATUM OF 1929 |

### LEGEND:

- HZ-AZ COMBINATION WALL
- NAVIGATION CHANNEL BOUNDARY
- BATHYMETRY
- FENCE
- PROPERTY BOUNDARY
- LIMITS OF PROTECTIVE FENDERING
- PIERHEAD AND BULKHEAD LINE
- ARMOR MATTRESSES
- EXTRACTION WELLS

CITY: TOLEDO-OH DIV/GROUP: DB-A HUNT LD: PIC:R. ROMAGNOLI PM:R. ROMAGNOLI TM:R. ROMAGNOLI LYR:ON=*;OFF=*REF
\\CH2DFS01\Data\Projects\B0009961.0000\Drawings\S-1 NOTES.dwg LAYOUT: STRUCTURAL NOTES ABBREVIATIONS AND LEGEND SAVED: 7/1/2011 3:43 PM ACADVER: 18.0S (LMS TECH) PAGESETUP: PDF 22X34 2010 VERSION DWG TO PDF.PC3 PLOTSTYLETABLE: PLTCONT.CTB PLOTTED:
7/1/2011 3:46 PM BY: HUNT, AARON IMAGES: PROJECTNAME: -
XREFS: 09861X00 09861X00-AAHPE

NOT TO SCALE

THIS BAR REPRESENTS ONE INCH ON THE ORIGINAL DRAWING: USE TO VERIFY FIGURE REPRODUCTION SCALE

| No. | Date | Revisions | By | Ckd |
|---|---|---|---|---|

THIS DRAWING IS THE PROPERTY OF THE ARCADIS ENTITY IDENTIFIED IN THE TITLE BLOCK AND MAY NOT BE REPRODUCED OR ALTERED IN WHOLE OR IN PART WITHOUT THE EXPRESS WRITTEN PERMISSION OF SAME.

Professional Engineer's Name: AARON A HUNT
Professional Engineer's No.: 24GE04804300

| State | Date Signed | Project Mgr. |
|---|---|---|
| NJ | | RAR |
| Designed by AAH | Drawn by AAH | Checked by RAK |

7/5/2011

ARCADIS

ARCADIS U.S., INC.
NEW JERSEY ENGINEERING CERTIFICATE OF AUTHORIZATION NUMBER 24GA27939600

TIERRA SOLUTIONS, INC. • LOWER PASSAIC RIVER, NEWARK, NJ
PHASE I CERCLA NON-TIME-CRITICAL REMOVAL ACTION

# STRUCTURAL NOTES, ABBREVIATIONS, AND LEGEND

STRUCTURAL

ARCADIS Project No. B0009964.0001
Date JULY 2011

ARCADIS
6723 TOWPATH ROAD
BOX 66
SYRACUSE, NY 13214
TEL: 315.446.9120

S-1

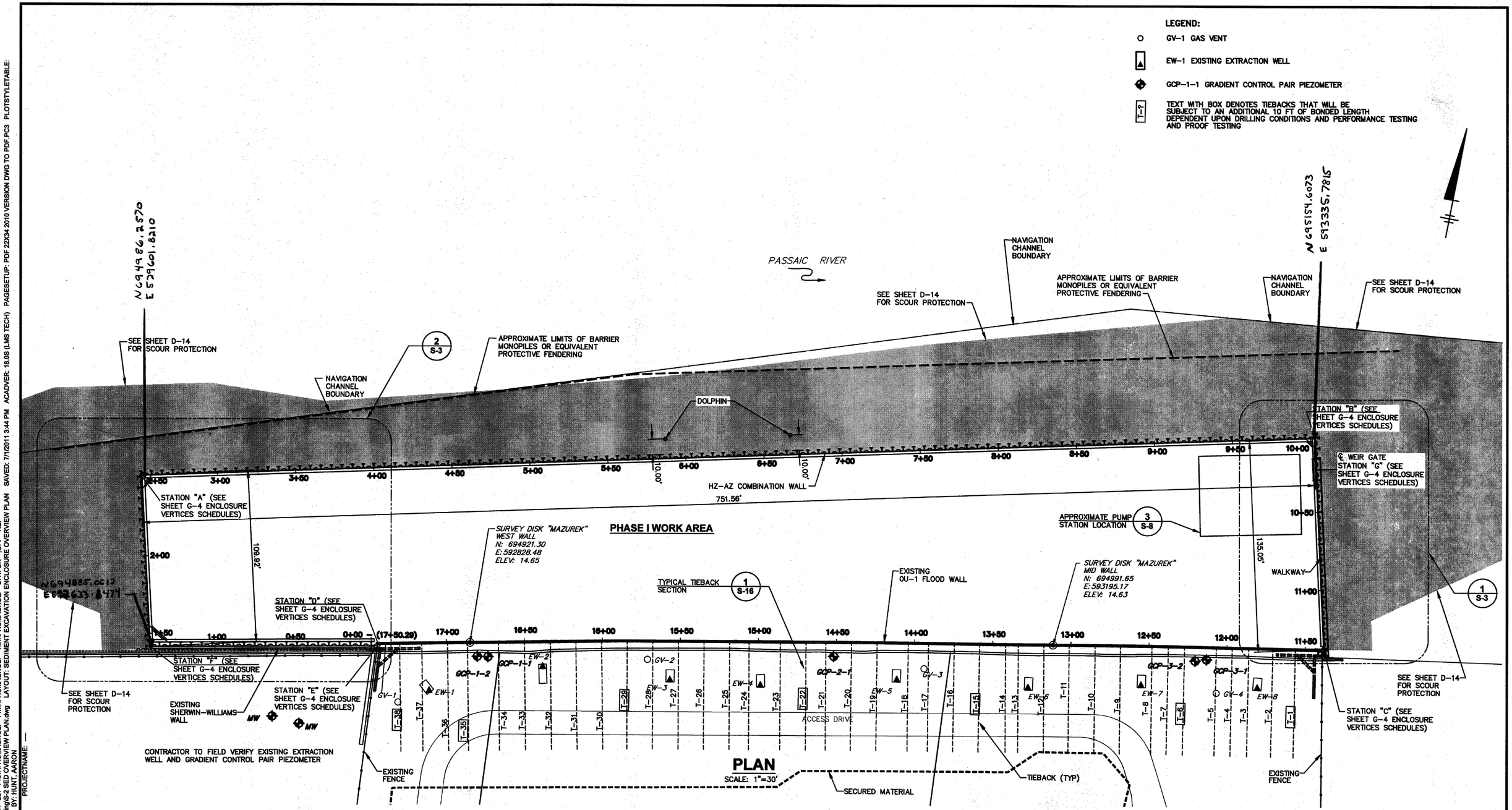


CITY: TOLEDO-OH DIV/GROUP: DB:A. HUNT LD: PIC:R. ROMAGNOLI PM:R. ROMAGNOLI TM:R. ROMAGNOLI LYR:ON=*;OFF=REF SAVED: 7/1/2011 3:44 PM ACADVER: 18.0S (LMS TECH) PAGESETUP: PDF 22X34 2010 VERSION DWG TO PDF.PC3 PLOTSTYLETABLE:
\\OH03FP01\Data\Project\B0009861.0000\Drawing\S-2 SED OVERVIEW PLAN.dwg LAYOUT: SEDIMENT EXCAVATION ENCLOSURE OVERVIEW PLAN
PLTCONT:CTB PLOTTED: 7/1/2011 3:47 PM BY: HUNT, AARON PROJECTNAME: ---

XREFS: 09961X00, 09961X00-AAHPE, baseline, 09961X02, baseline, walkwayPlan, 09964XL1, monopiles mattress, Nav_Channel, Limit, OU-1plan, XWEEKSASBUILT
IMAGES:

0 30' 60' 90'
1"=30'

THIS BAR REPRESENTS ONE INCH ON THE ORIGINAL DRAWING: USE TO VERIFY FIGURE REPRODUCTION SCALE

| No. | Date | Revisions | By | Ckd |
|---|---|---|---|---|

THIS DRAWING IS THE PROPERTY OF THE ARCADIS ENTITY IDENTIFIED IN THE TITLE BLOCK AND MAY NOT BE REPRODUCED OR ALTERED IN WHOLE OR IN PART WITHOUT THE EXPRESS WRITTEN PERMISSION OF SAME.

| Professional Engineer's Name | | |
|---|---|---|
| AARON A HUNT | | |
| Professional Engineer's No. | | |
| 24GE04804300 | | |
| State: NJ | Date Signed: | Project Mgr.: RAR |
| Designed by: AAH | Drawn by: AAH | Checked by: RAK |

7/5/2011

ARCADIS

ARCADIS U.S., INC.
NEW JERSEY ENGINEERING CERTIFICATE OF AUTHORIZATION NUMBER 24GA27939600

TIERRA SOLUTIONS, INC. • LOWER PASSAIC RIVER, NEWARK, NJ
PHASE I CERCLA NON-TIME-CRITICAL REMOVAL ACTION

# SEDIMENT EXCAVATION ENCLOSURE OVERVIEW PLAN

STRUCTURAL

ARCADIS Project No. B0009964.0001
Date JULY 2011

ARCADIS
6723 TOWPATH ROAD
BOX 66
SYRACUSE, NY 13214
TEL: 315.446.9120

S-2

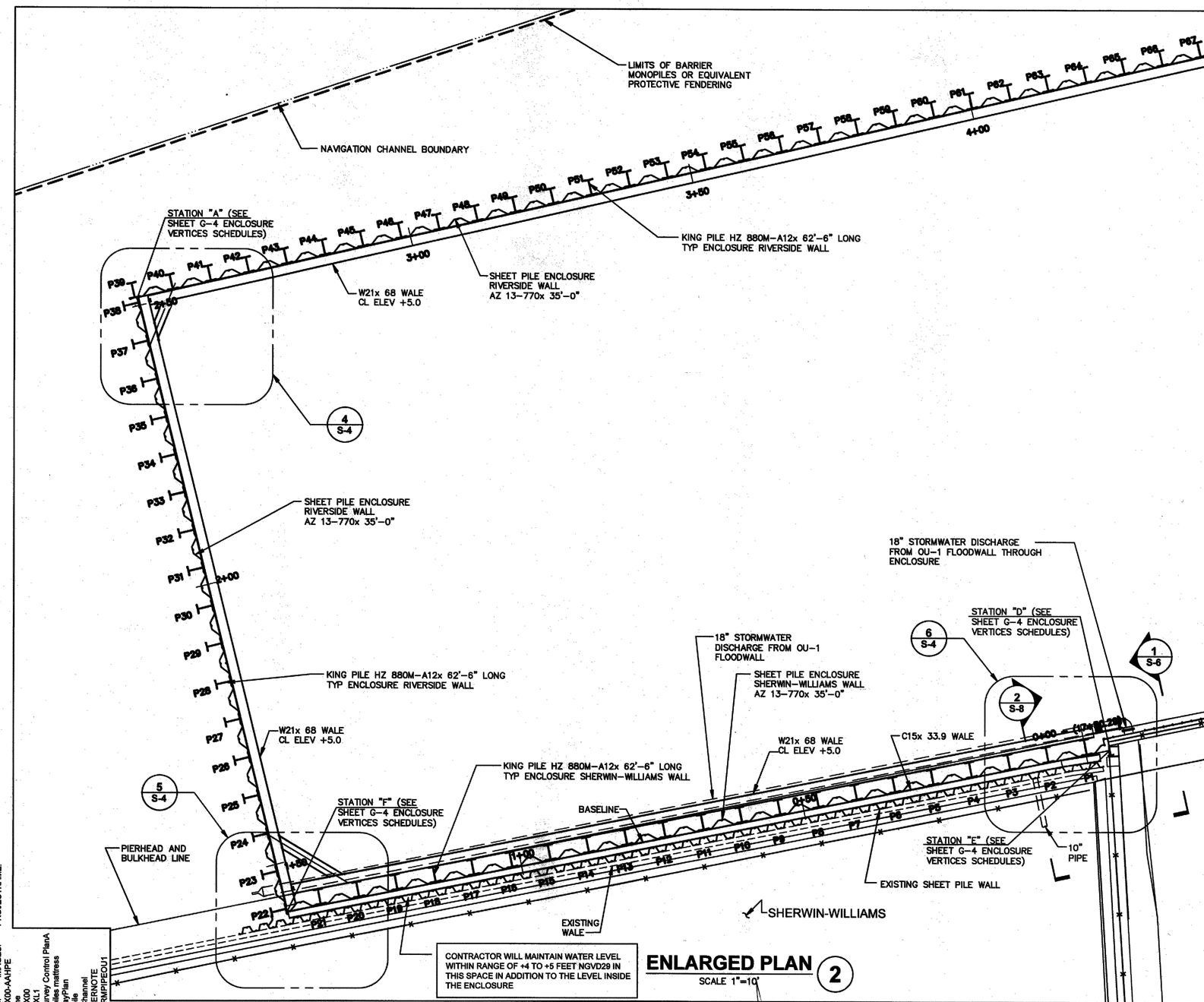


## ENLARGED PLAN 2

SCALE 1"=10'

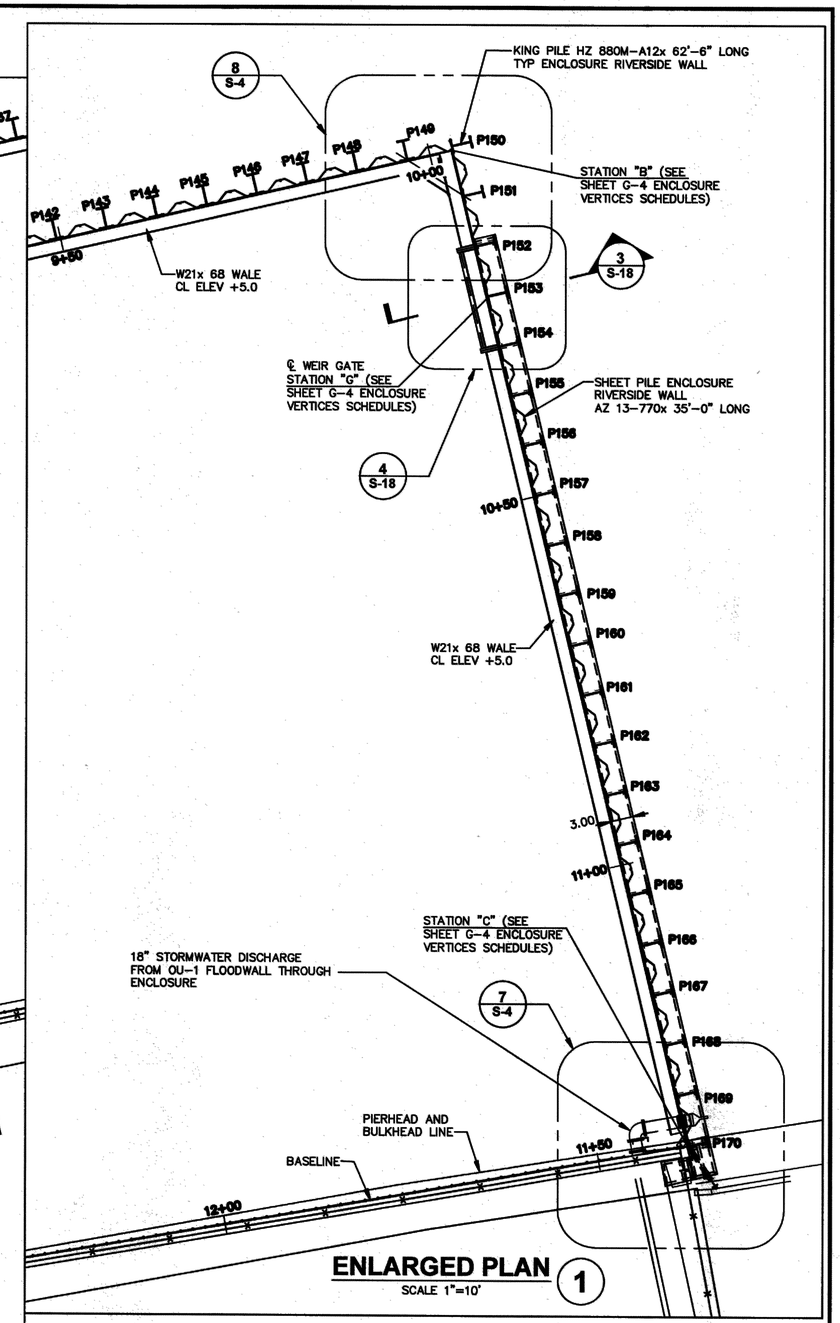


## ENLARGED PLAN 1

SCALE 1"=10'

XREFS: IMAGES: PROJECTNAME: -
09861X00-AAHPE
baseline
09861X00
09864XL1
G-2 Survey Control PlanA
mcowpile mattress
wallwayPlan
sheetpile
Nav_Channel
XWATERNOTE
XSTORMPIPEOU1

0 10' 20' 30'
1"=10'

THIS BAR REPRESENTS ONE INCH ON THE ORIGINAL DRAWING: USE TO VERIFY FIGURE REPRODUCTION SCALE

| No. | Date | Revisions | By | Ckd |
|---|---|---|---|---|

THIS DRAWING IS THE PROPERTY OF THE ARCADIS ENTITY IDENTIFIED IN THE TITLE BLOCK AND MAY NOT BE REPRODUCED OR ALTERED IN WHOLE OR IN PART WITHOUT THE EXPRESS WRITTEN PERMISSION OF SAME.

Professional Engineer's Name: AARON A HUNT
Professional Engineer's No.: 24GE04804300

| State | Date Signed | Project Mgr. |
|---|---|---|
| NJ | | RAR |
| Designed by | Drawn by | Checked by |
| AAH | AAH | RAK |

7/5/2011

ARCADIS

ARCADIS U.S., INC.
NEW JERSEY ENGINEERING CERTIFICATE OF AUTHORIZATION NUMBER 24GA27939600

TIERRA SOLUTIONS, INC. • LOWER PASSAIC RIVER, NEWARK, NJ
PHASE I CERCLA NON-TIME-CRITICAL REMOVAL ACTION

# ENLARGED PLANS

STRUCTURAL

ARCADIS Project No. B0009964.0001
Date JULY 2011

ARCADIS
6723 TOWPATH ROAD
BOX 66
SYRACUSE, NY 13214
TEL: 315.446.9120

S-3

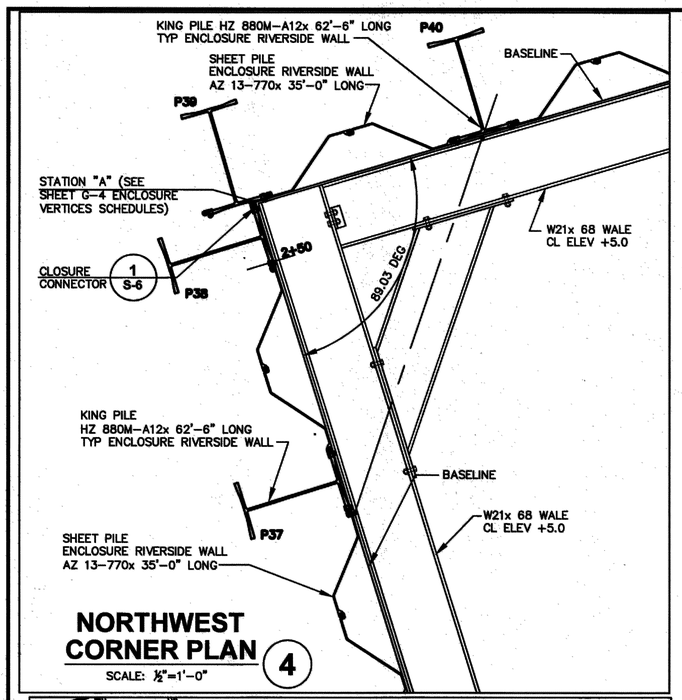


## NORTHWEST CORNER PLAN 4

SCALE: ½"=1'-0"

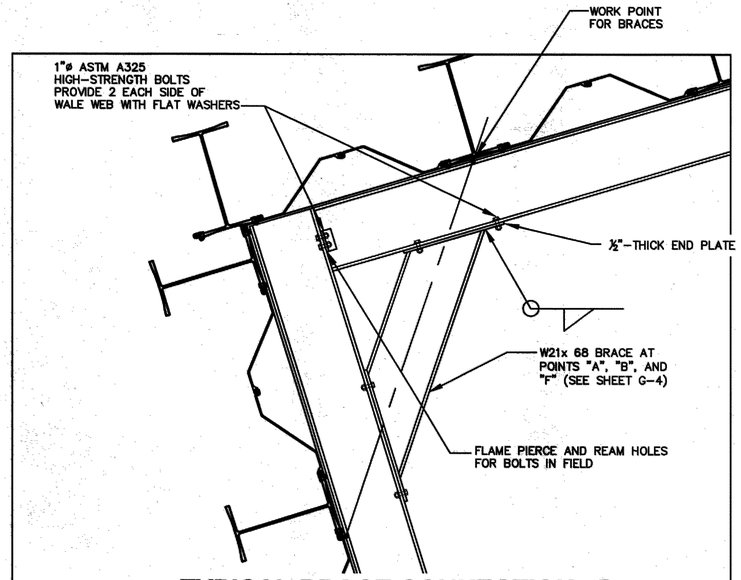


## TYPICAL BRACE CONNECTION 1

SCALE: 1"=1'-0"

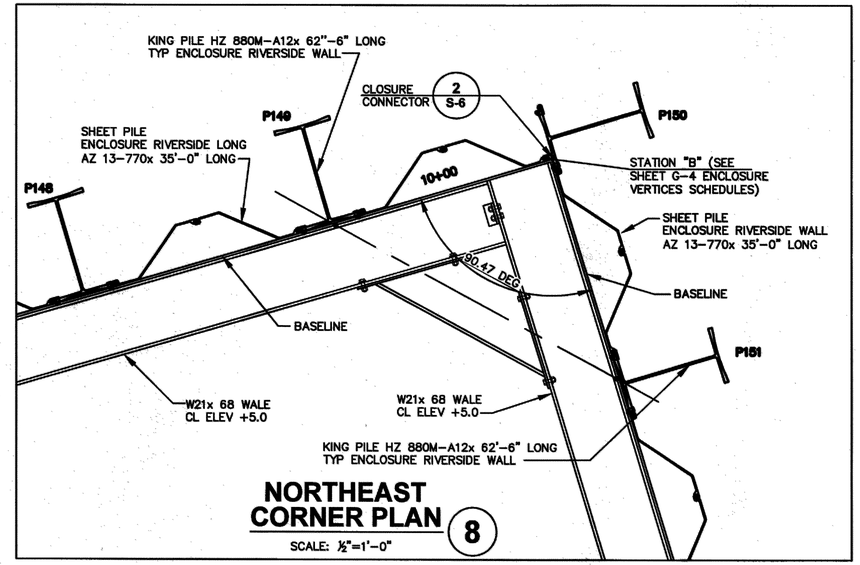


## NORTHEAST CORNER PLAN 8

SCALE: ½"=1'-0"

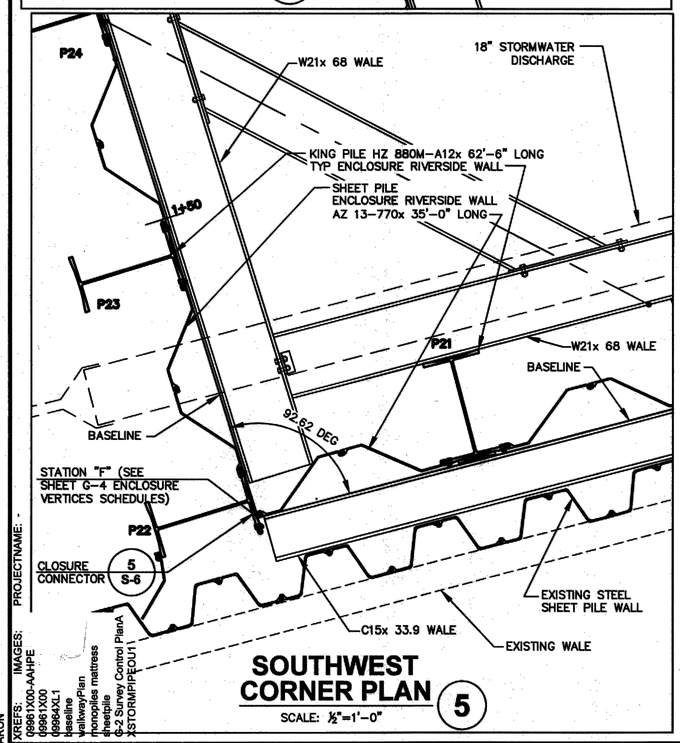


## SOUTHWEST CORNER PLAN 5

SCALE: ½"=1'-0"

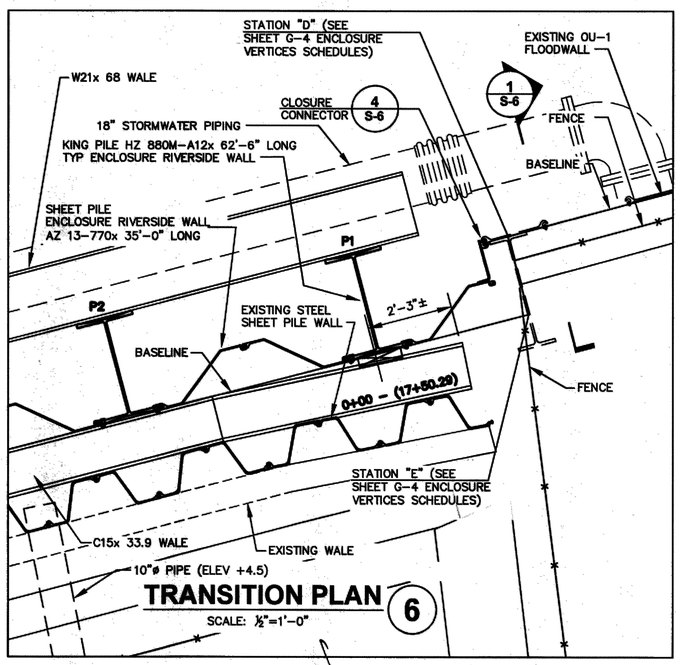


## TRANSITION PLAN 6

SCALE: ½"=1'-0"

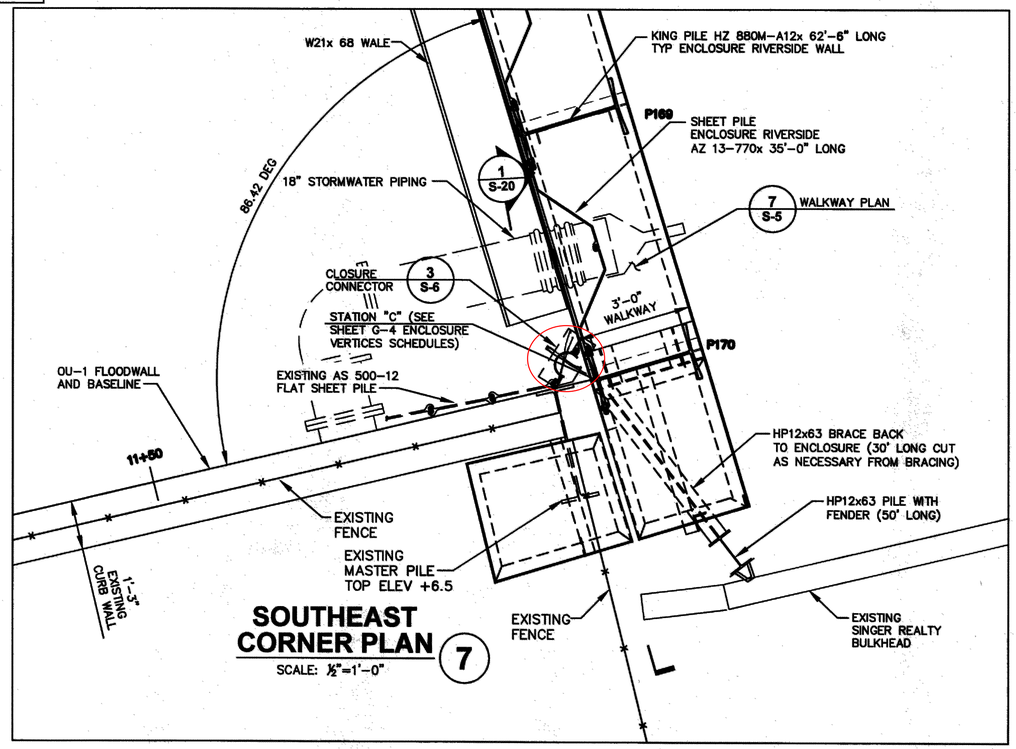


## SOUTHEAST CORNER PLAN 7

SCALE: ½"=1'-0"

CITY: TOLEDO-OH DIV/GROUP: DB:A. HUNT LD: PIC:R. ROMAGNOLI PM:R. ROMAGNOLI TM:R. ROMAGNOLI LYR: ON=*;OFF=*REF
W:\0H03\P01\Data\Project\B0009961.0000\Drawing\S-4 CORNER DETAILS.dwg LAYOUT: ENCLOSURE CORNER DETAILS SAVED: 6/30/2011 12:34 PM ACADVER: 18.0S (LMS TECH) PAGESETUP: PDF 22X34 2010 VERSION DWG TO PDF.PC3 PLOTSTYLETABLE: PLTCONT.CTB PLOTTED: 7/1/2011
3:47 PM BY: HUNT, AARON

XREFS: G9961X00-AAHPE G9961X00 G9964XL1 baseline topographic plan monopoles mattress sheetpile G-2 Survey Control PlanA X-STORMPIPEOU11
IMAGES:
PROJECTNAME: -

REFER TO INDIVIDUAL DETAIL TITLES FOR APPROPRIATE SCALE

THIS BAR REPRESENTS ONE INCH ON THE ORIGINAL DRAWING: USE TO VERIFY FIGURE REPRODUCTION SCALE

| No. | Date | Revisions | By | Ckd |
|---|---|---|---|---|

THIS DRAWING IS THE PROPERTY OF THE ARCADIS ENTITY IDENTIFIED IN THE TITLE BLOCK AND MAY NOT BE REPRODUCED OR ALTERED IN WHOLE OR IN PART WITHOUT THE EXPRESS WRITTEN PERMISSION OF SAME.

| Professional Engineer's Name | | |
|---|---|---|
| AARON A HUNT | | |
| Professional Engineer's No. | | |
| 24GE04804300 | | |
| State | Date Signed | Project Mgr. |
| NJ | | RAR |
| Designed by | Drawn by | Checked by |
| AAH | AAH | RAK |

7/5/2011

ARCADIS

ARCADIS U.S., INC.
NEW JERSEY ENGINEERING CERTIFICATE OF AUTHORIZATION NUMBER 24GA27939600

TIERRA SOLUTIONS, INC. • LOWER PASSAIC RIVER, NEWARK, NJ
PHASE I CERCLA NON-TIME-CRITICAL REMOVAL ACTION

# ENCLOSURE CORNER DETAILS

STRUCTURAL

ARCADIS Project No.
B0009964.0001

Date
JULY 2011

ARCADIS
6723 TOWPATH ROAD
BOX 66
SYRACUSE, NY 13214
TEL: 315.446.9120

S-4

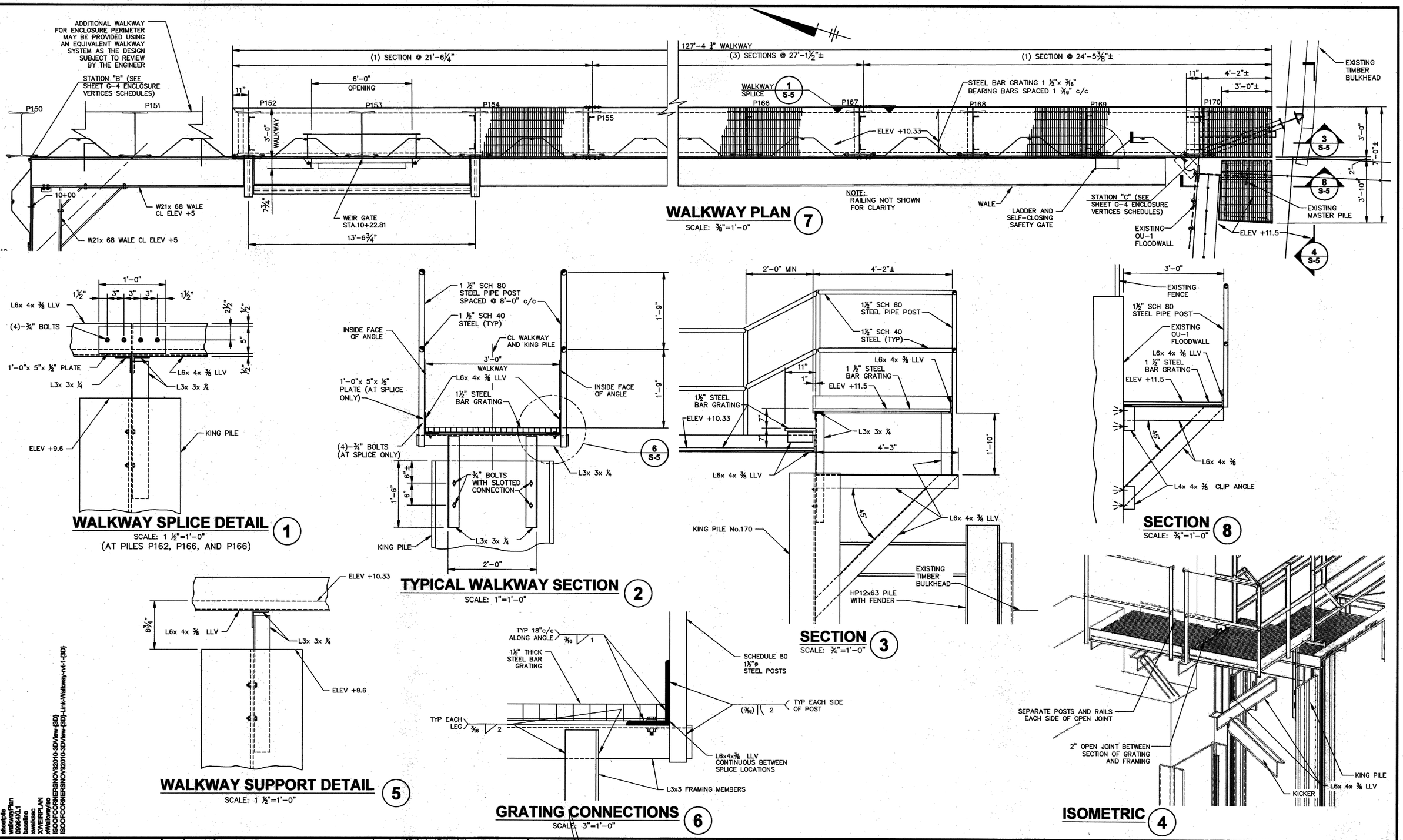


REFER TO INDIVIDUAL DETAIL TITLES FOR APPROPRIATE SCALE

THIS BAR REPRESENTS ONE INCH ON THE ORIGINAL DRAWING: USE TO VERIFY FIGURE REPRODUCTION SCALE

| No. | Date | Revisions | By | Ckd |
|---|---|---|---|---|

THIS DRAWING IS THE PROPERTY OF THE ARCADIS ENTITY IDENTIFIED IN THE TITLE BLOCK AND MAY NOT BE REPRODUCED OR ALTERED IN WHOLE OR IN PART WITHOUT THE EXPRESS WRITTEN PERMISSION OF SAME.

Professional Engineer's Name: AARON A HUNT
Professional Engineer's No.: 24GE04804300
State: NJ | Date Signed: | Project Mgr.: RAR
Designed by: AAH | Drawn by: AAH | Checked by: RAK

ARCADIS
ARCADIS U.S., INC.
NEW JERSEY ENGINEERING CERTIFICATE OF AUTHORIZATION NUMBER 24GA27939600

TIERRA SOLUTIONS, INC. • LOWER PASSAIC RIVER, NEWARK, NJ
PHASE I CERCLA NON-TIME-CRITICAL REMOVAL ACTION

# WALKWAY FRAMING PLAN AND ENCLOSURE ACCESS

STRUCTURAL

ARCADIS Project No. B0009964.0001
Date JULY 2011
ARCADIS 6723 TOWPATH ROAD BOX 66 SYRACUSE, NY 13214 TEL: 315.446.9120

S-5

CITY: TOLEDO-OH DIVGROUP: DB:A.HUNT LD: PIC:R. ROMAGNOLI PM:R. ROMAGNOLI TM:R. ROMAGNOLI LYR: ON=*;OFF=*REF
\\OH03FP01\Data\Project\B0009961.0000\Drawing\S-5 WALKWAY FRAMING.dwg LAYOUT: LAYOUT1 SAVED: 7/1/2011 3:46 PM ACADVER: 18.0S (LMS TECH) PAGESETUP: PDF 22X34 2010 VERSION DWG TO PDF.PC3 PLOTSTYLETABLE: PLTCONT.CTB PLOTTED: 7/1/2011 3:47 PM BY: HUNT,
AARON
IMAGES: PROJECTNAME: —
XREFS: 09961X00 sheetpile walkwayPlan 09960AL1 bwalls xwellsec XWEIRPLAN xWalkwayiso ISOOFCORNERSNOV92010-3DView-{3D} ISOOFCORNERSNOV92010-3DView-{3D}-Link-Walkway-v-1-{3D}

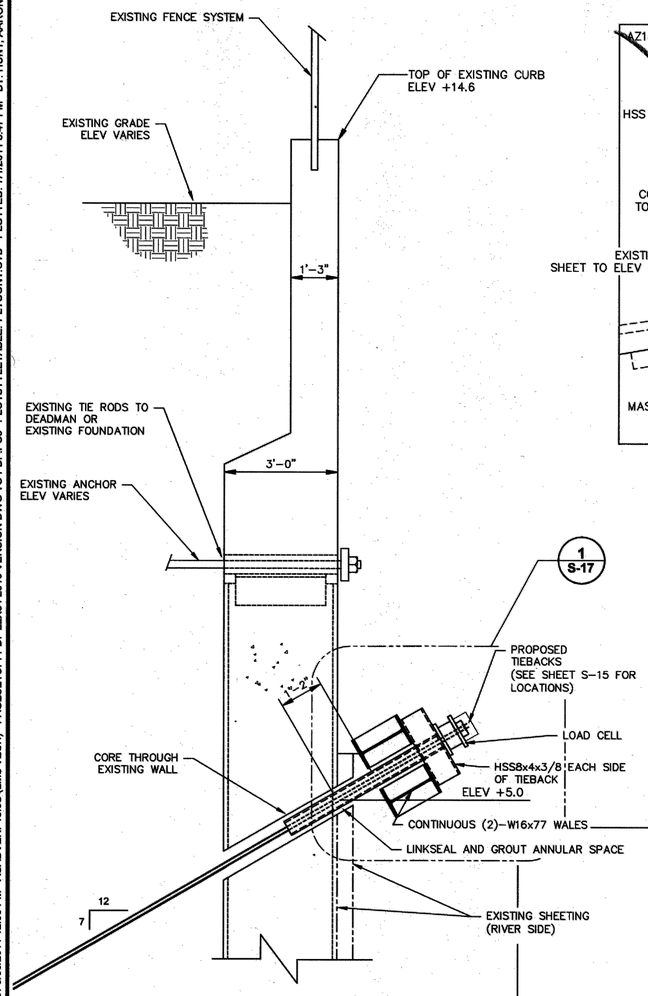


## OU-1 FLOODWALL SECTION (6)

SCALE: ½"=1'-0"

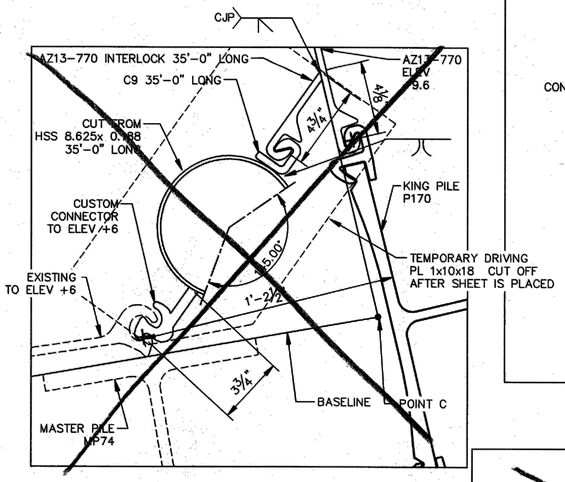


## ENLARGED INTERLOCK DETAIL

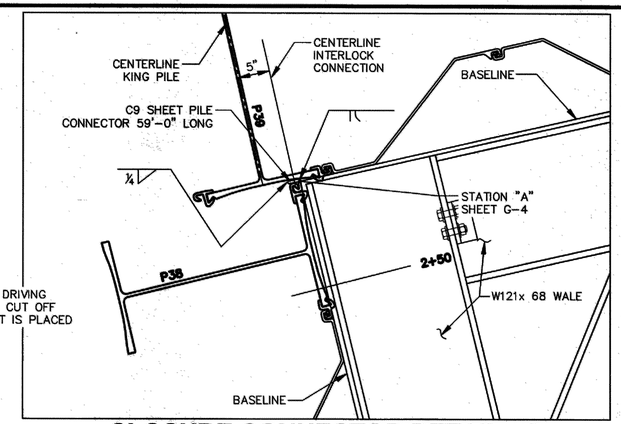


## CLOSURE CONNECTOR DETAIL (1)

SCALE: 1"=1'-0"

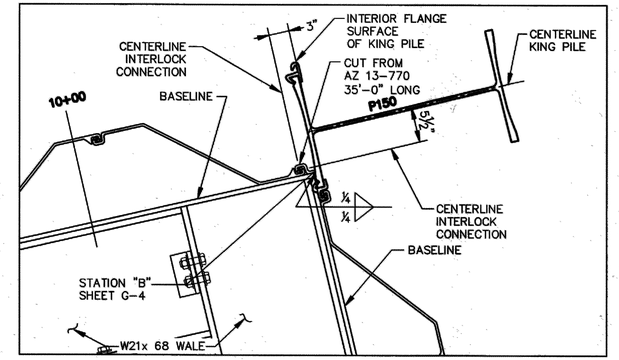


## CLOSURE CONNECTOR DETAIL (2)

SCALE: 1"=1'-0"

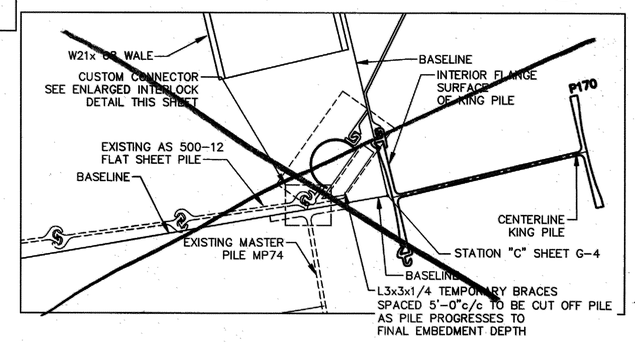


## CLOSURE CONNECTOR DETAIL (3)

SCALE: 1"=1'-0"

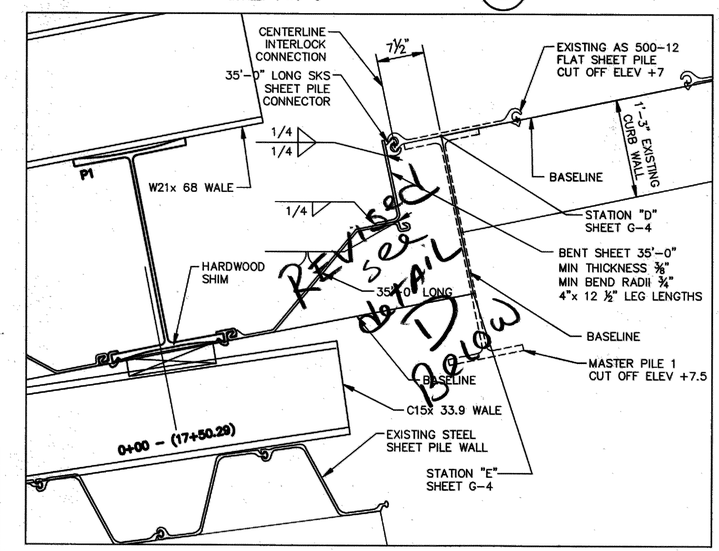


## CLOSURE CONNECTOR DETAIL (4)

SCALE: 1"=1'-0"

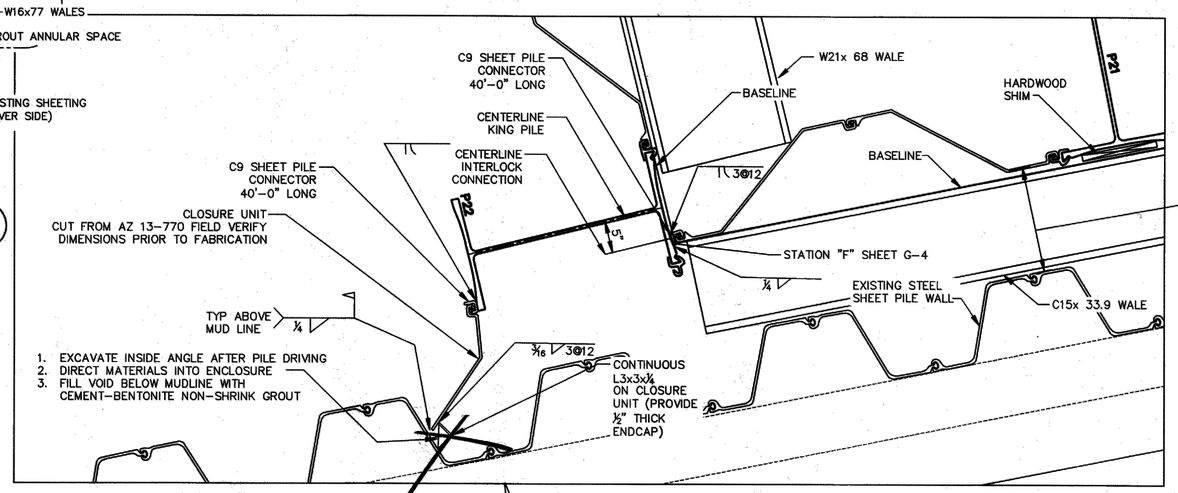


CONTRACTOR WILL MAINTAIN WATER LEVEL WITHIN RANGE OF +4 TO +5 FEET NGVD29 IN THIS SPACE IN ADDITION TO THE LEVEL INSIDE THE ENCLOSURE

## CLOSURE CONNECTOR DETAIL (5)

SCALE: 1"=1'-0"

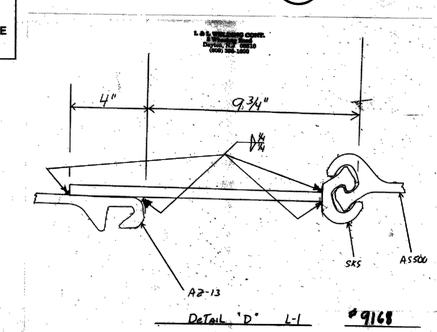


CITY: TOLEDO-OH DIV/GROUP: DB:A. HUNT LD: PIC:R. ROMAGNOLI PM:R. ROMAGNOLI TM:R. ROMAGNOLI LYR: ON=*;OFF=*REF
\\CHA03FP01\Data\Projects\B0009961.0000\Drawings\PILE PILING.dwg LAYOUT: SECTIONS SAVED: 6/30/2011 12:36 PM ACADVER: 18.0S (LMS TECH) PAGESETUP: PDF 22X34 2010 VERSION DWG TO PDF.PC3 PLOTSTYLETABLE: PLTCONT.CTB PLOTTED: 7/1/2011 3:47 PM BY: HUNT, AARON

XREFS: 09961X00-AAHPE 09961X00 XBASETTEBACK 09964XL1 basemap walkwayPlan sheetpile XWATERNOTE XRBOX-TXT
IMAGES: PROJECTNAME: -

0' 1' 2' 3' 4' 5' 6'
1/2"=1'-0"

THIS BAR REPRESENTS ONE INCH ON THE ORIGINAL DRAWING: USE TO VERIFY FIGURE REPRODUCTION SCALE

| No. | Date | Revisions | By | Ckd |
|---|---|---|---|---|

THIS DRAWING IS THE PROPERTY OF THE ARCADIS ENTITY IDENTIFIED IN THE TITLE BLOCK AND MAY NOT BE REPRODUCED OR ALTERED IN WHOLE OR IN PART WITHOUT THE EXPRESS WRITTEN PERMISSION OF SAME.

Professional Engineer's Name: AARON A HUNT
Professional Engineer's No.: 24GE04804300

| State | Date Signed | Project Mgr. |
|---|---|---|
| NJ | | RAR |
| Designed by AAH | Drawn by AAH | Checked by RAK |

7/5/2011

ARCADIS
ARCADIS U.S., INC.
NEW JERSEY ENGINEERING CERTIFICATE OF AUTHORIZATION NUMBER 24GA27939600

TIERRA SOLUTIONS, INC. • LOWER PASSAIC RIVER, NEWARK, NJ
PHASE I CERCLA NON-TIME-CRITICAL REMOVAL ACTION

# SECTIONS

SHEET 1 OF 3
STRUCTURAL

ARCADIS Project No. B0009964.0001
Date JULY 2011

ARCADIS
6723 TOWPATH ROAD
BOX 66
SYRACUSE, NY 13214
TEL: 315.446.9120

S-6

NOTE OVER BARRIER MONOPILES:
SUBMITTAL OF ALTERNATE ENCLOSURE PROTECTION DESIGN MAY BE CONSIDERED BY ENGINEER AND MUST INCLUDE PLANS AND DETAILS FOR APPROVAL BY ENGINEER TO MODIFY BARRIER MONOPILE PLAN.

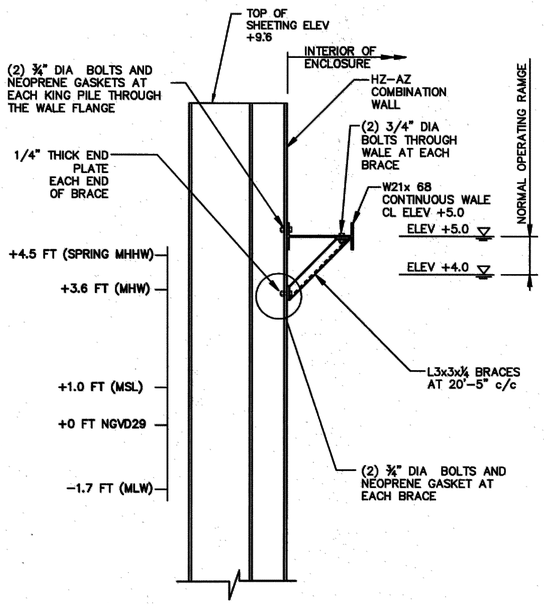


## SECTION
## TYPICAL RIVERSIDE SECTION (1)
1/2"=1'-0"

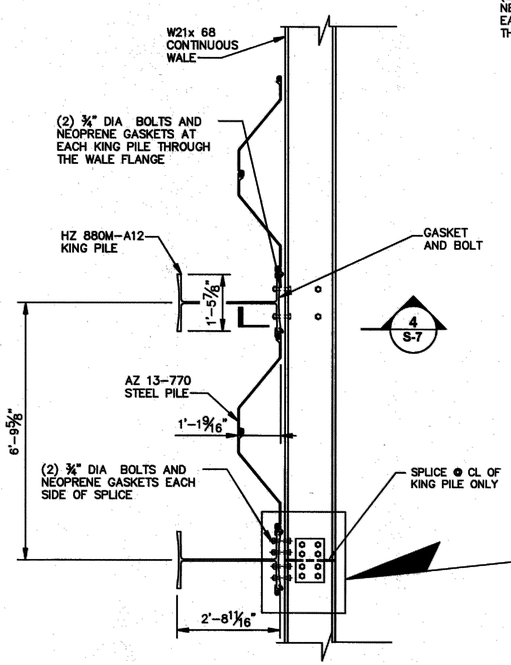


## PLAN
## TYPICAL WALE CONSTRUCTION (2)
1/2"=1'-0"

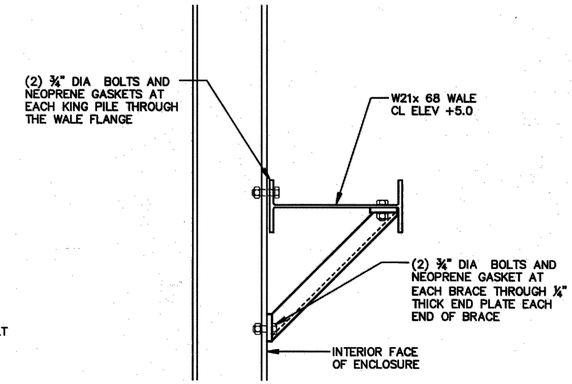


## TYPICAL WALE CONNECTION (4)
1"=1'-0"

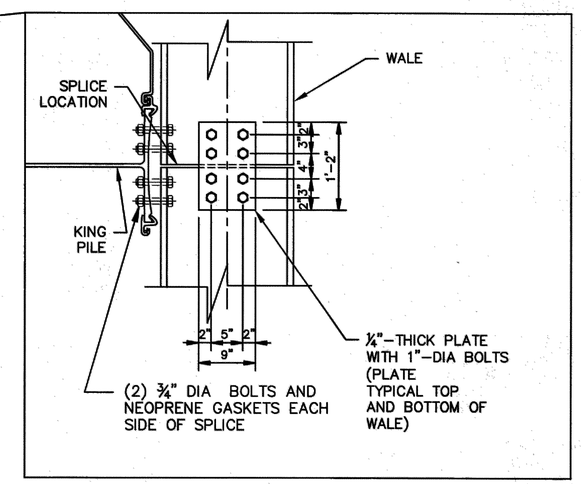


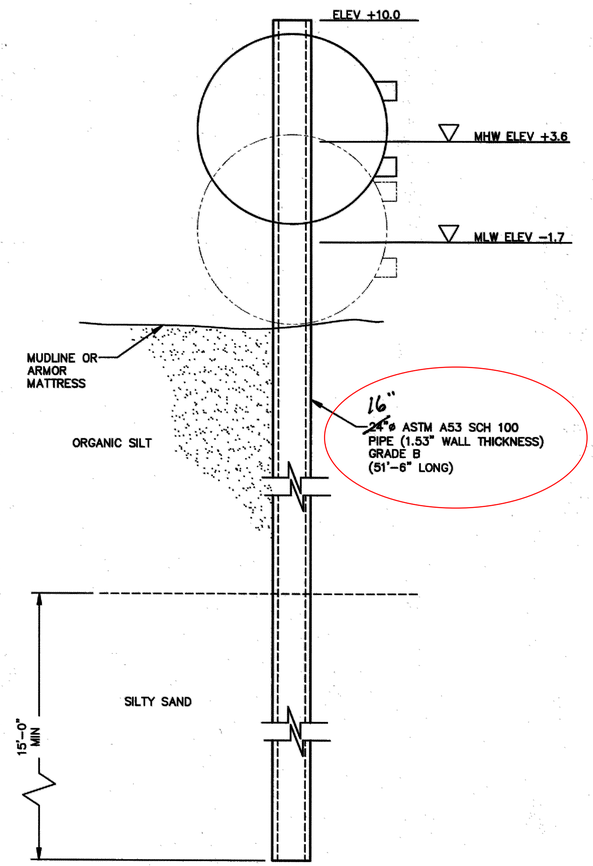


## MONOPILE (3)
¼"=1'-0"

CITY: TOLEDO-OH DIV/GROUP: DB:A. HUNT LD: PIC:R. ROMAGNOLI PM:R. ROMAGNOLI TM:R. ROMAGNOLI LYR: ON=*;OFF=*REF
WOH32FP01\Data\Project\B0009961.0000\Drawing\S-7 SECTIONS MONOPILE.dwg LAYOUT: S-7 SECTIONS MONOPILE SAVED: 6/30/2011 12:38 PM ACADVER: 18.0S (LMS TECH) PAGESETUP: PDF 22X34 2010 VERSION DWG TO PDF.PC3 PLOTSTYLETABLE: PLTCONT.CTB PLOTTED: 7/1/2011 3:48
PM BY: HUNT, AARON
XREFS: 09961X00 XMONOMOTE XRIVERLEGEND1-4 IMAGES: PROJECTNAME: -

0' 1' 2' 3' 4' 5' 6'
1/2"=1'-0"

THIS BAR REPRESENTS ONE INCH ON THE ORIGINAL DRAWING: USE TO VERIFY FIGURE REPRODUCTION SCALE

| No. | Date | Revisions | By | Ckd |
|---|---|---|---|---|

THIS DRAWING IS THE PROPERTY OF THE ARCADIS ENTITY IDENTIFIED IN THE TITLE BLOCK AND MAY NOT BE REPRODUCED OR ALTERED IN WHOLE OR IN PART WITHOUT THE EXPRESS WRITTEN PERMISSION OF SAME.

Professional Engineer's Name: AARON A HUNT
Professional Engineer's No.: 24GE04804300

| State | Date Signed | Project Mgr. |
|---|---|---|
| NJ | | RAR |
| Designed by AAH | Drawn by AAH | Checked by RAK |

7/5/2011

ARCADIS
ARCADIS U.S., INC.
NEW JERSEY ENGINEERING CERTIFICATE OF AUTHORIZATION NUMBER 24GA27939600

TIERRA SOLUTIONS, INC. • LOWER PASSAIC RIVER, NEWARK, NJ
PHASE I CERCLA NON-TIME-CRITICAL REMOVAL ACTION

# SECTIONS
SHEET 2 OF 3
STRUCTURAL

ARCADIS Project No. B0009964.0001
Date JULY 2011
ARCADIS
6723 TOWPATH ROAD
BOX 66
SYRACUSE, NY 13214
TEL: 315.446.9120

S-7

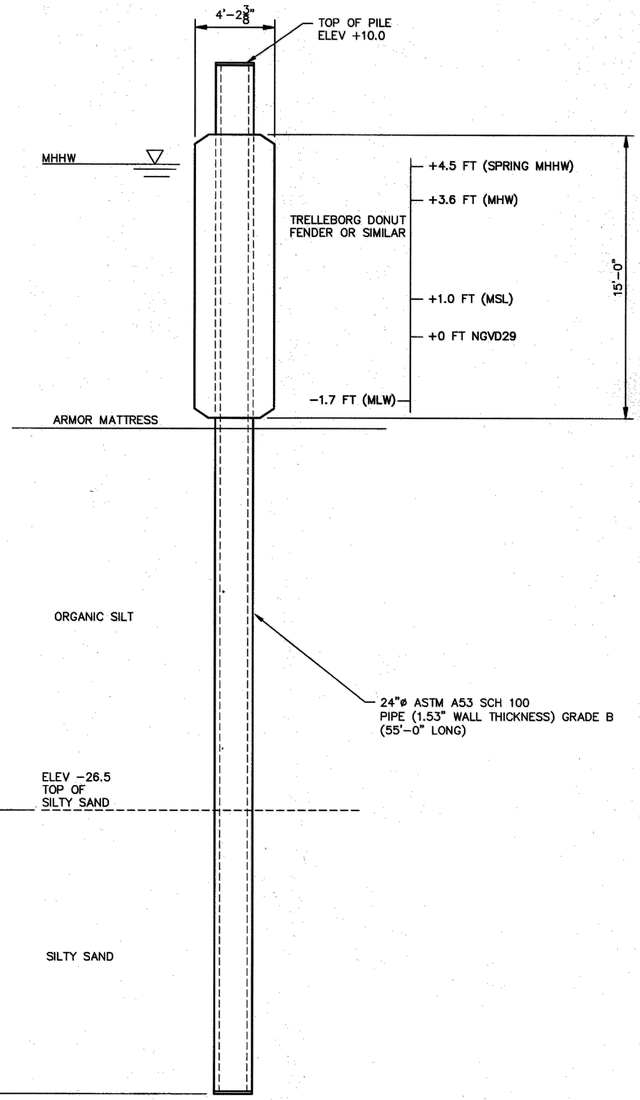


**DOLPHIN** (1)
SCALE: ½"=1'-0"

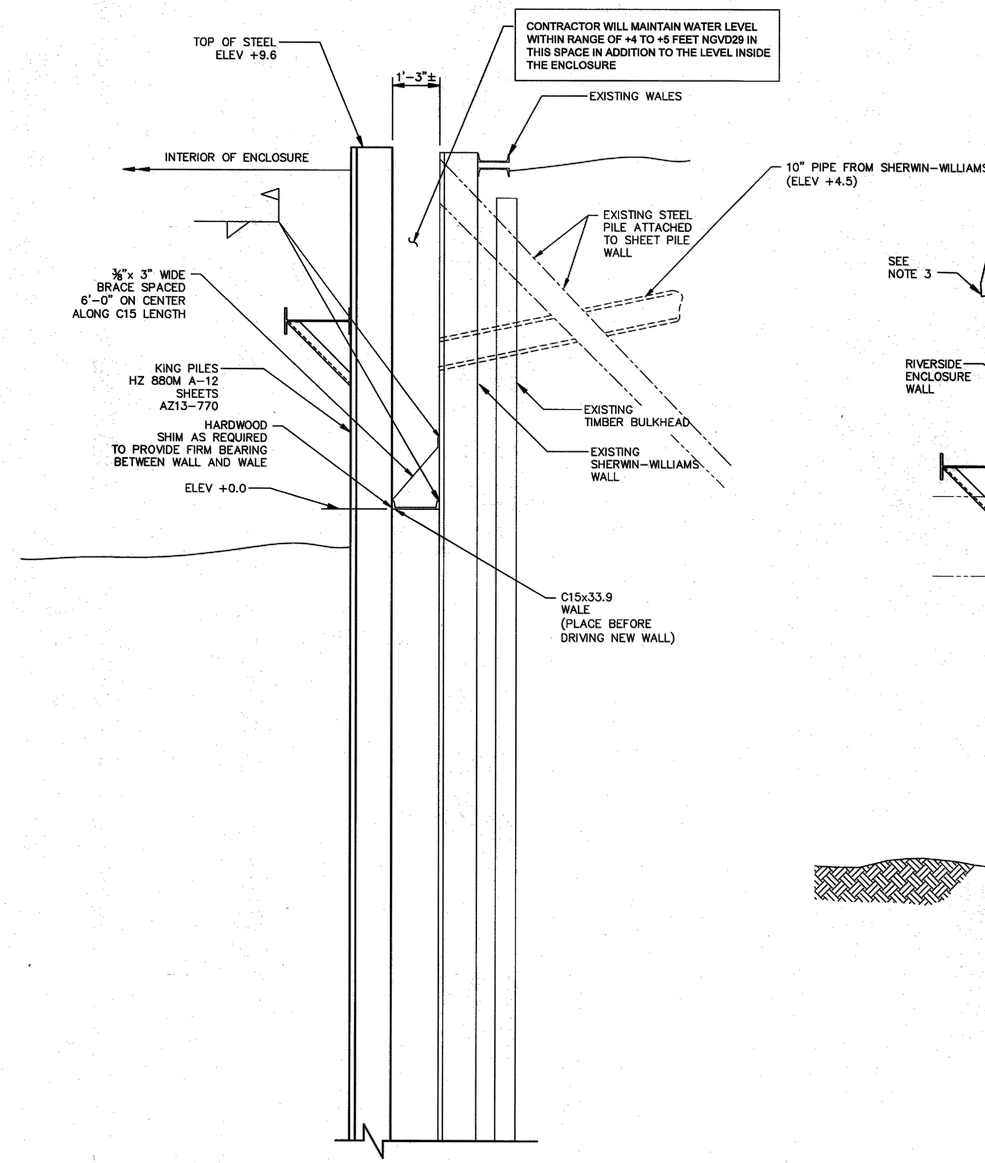


**SHERWIN-WILLIAMS WALL** (2)
SCALE: 1/2"=1'-0"

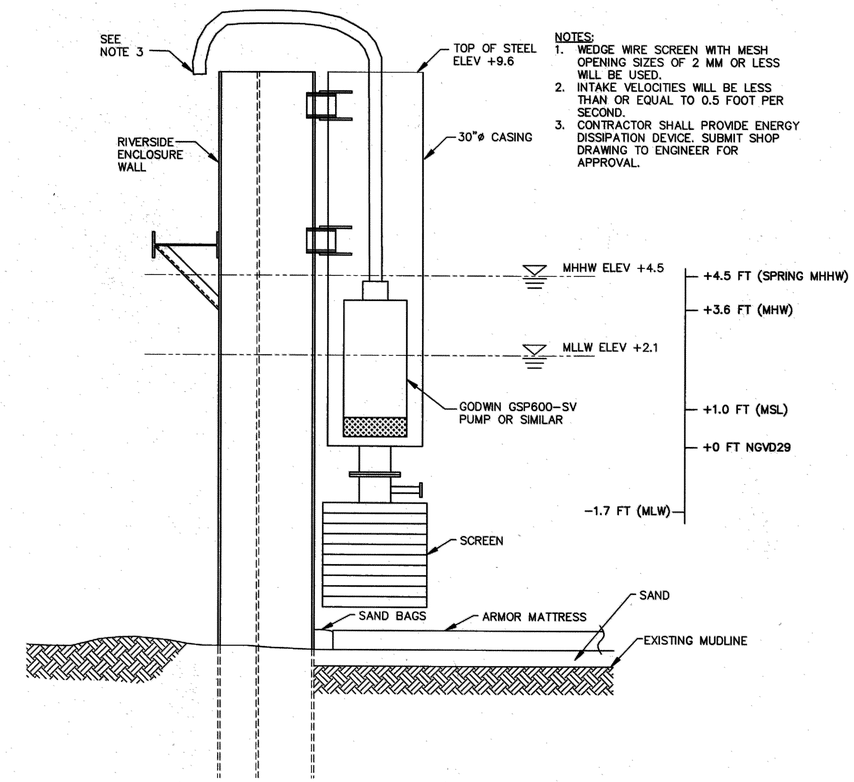


NOTES:
1. WEDGE WIRE SCREEN WITH MESH OPENING SIZES OF 2 MM OR LESS WILL BE USED.
2. INTAKE VELOCITIES WILL BE LESS THAN OR EQUAL TO 0.5 FOOT PER SECOND.
3. CONTRACTOR SHALL PROVIDE ENERGY DISSIPATION DEVICE. SUBMIT SHOP DRAWING TO ENGINEER FOR APPROVAL.

**SUBMERSIBLE PUMP** (3)
SCALE: ½"=1'-0"

CITY: TOLEDO-OH DIV/GROUP: DB:A. HUNT LD: PIC:R. ROMAGNOLI PM:R. ROMAGNOLI TM:R. ROMAGNOLI LYR: ON=*;OFF=*REF
\\OH03FP01\Data\Project\B0009961.0000\Drawing\S-8 SECTIONS S-W DOLPHIN.dwg LAYOUT: SECTIONS AND DETAILS SAVED: 6/30/2011 12:39 PM ACADVER: 18.0S (LMS TECH) PAGESETUP: PDF 22X34 2010 VERSION DWG TO PDF.PC3 PLOTSTYLETABLE: PLTCONT.CTB PLOTTED: 7/1/2011
3:48 PM BY: HUNT, AARON
XREFS: 09961X00-AAHPE 09961X00 XBASETIEBACK XWATERNOTE XRIVERLEGEND IMAGES: PROJECTNAME: -

0' 1' 2' 3' 4' 5' 6'
1/2"=1'-0"

THIS BAR REPRESENTS ONE INCH ON THE ORIGINAL DRAWING: USE TO VERIFY FIGURE REPRODUCTION SCALE

| No. | Date | Revisions | By | Ckd |
|---|---|---|---|---|

THIS DRAWING IS THE PROPERTY OF THE ARCADIS ENTITY IDENTIFIED IN THE TITLE BLOCK AND MAY NOT BE REPRODUCED OR ALTERED IN WHOLE OR IN PART WITHOUT THE EXPRESS WRITTEN PERMISSION OF SAME

| | | |
|---|---|---|
| Professional Engineer's Name: AARON A HUNT | | |
| Professional Engineer's No.: 24GE04804300 | | |
| State: NJ | Date Signed | Project Mgr.: RAR |
| Designed by: AAH | Drawn by: AAH | Checked by: RAK |

ARCADIS

ARCADIS U.S., INC.
NEW JERSEY ENGINEERING CERTIFICATE OF AUTHORIZATION NUMBER 24GA27939600

TIERRA SOLUTIONS, INC. • LOWER PASSAIC RIVER, NEWARK, NJ
PHASE I CERCLA NON-TIME-CRITICAL REMOVAL ACTION

# SECTIONS
SHEET 3 OF 3
STRUCTURAL

ARCADIS Project No. B0009964.0001
Date JULY 2011
ARCADIS
6723 TOWPATH ROAD
BOX 66
SYRACUSE, NY 13214
TEL: 315.446.9120

S-8

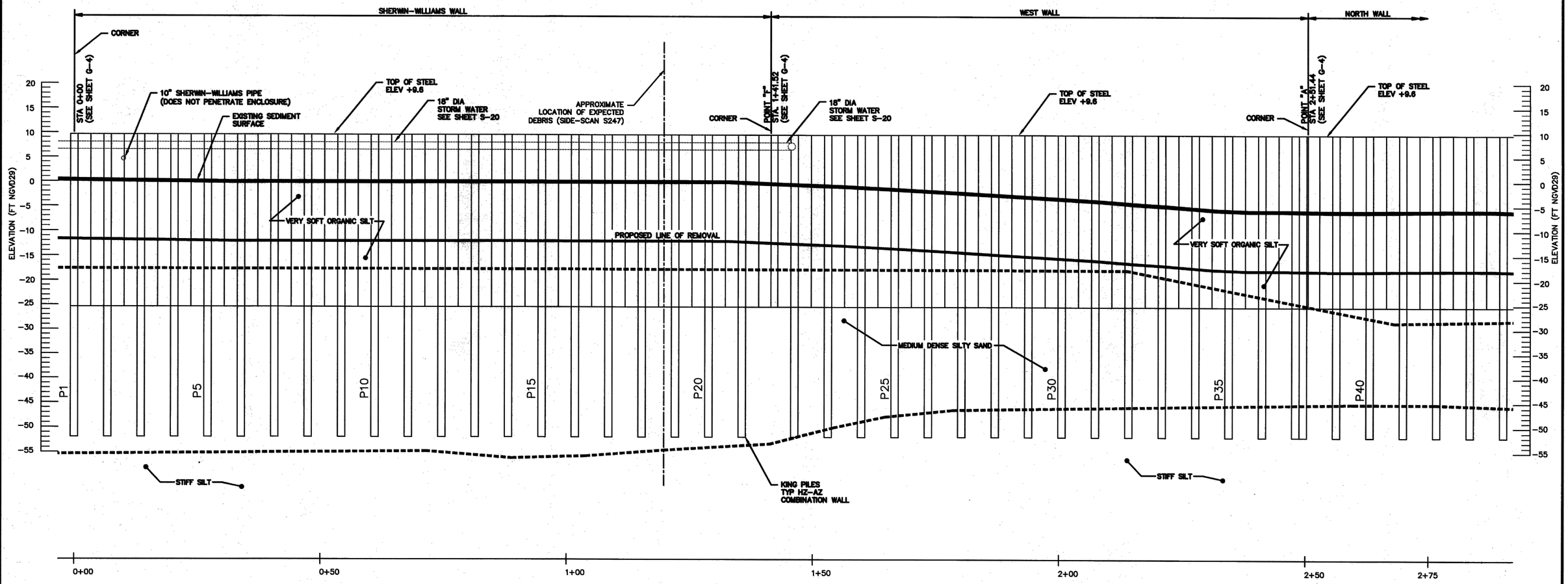


## ELEVATION STA 0+00 TO 2+75

1"=10'-0"

NOTE: ALL SOIL DELINEATIONS ARE ESTIMATED FROM AVAILABLE BORING INFORMATION AND SHOULD BE CONSIDERED APPROXIMATE.

CITY: TOLEDO-OH DIV/GROUP: DB:A. HUNT LD: PIC:R. ROMAGNOLI PM:R. ROMAGNOLI TM:R. ROMAGNOLI LYR: ON=*;OFF=*REF
\\OH03FP01\Data\Project\B0009961.0000\Drawing\S-9 ELEV 000 275.dwg LAYOUT: ELE0275 SAVED: 6/30/2011 12:40 PM ACADVER: 18.0S (LMS TECH) PAGESETUP: PDF 22X34 2010 VERSION DWG TO PDF.PC3 PLOTSTYLETABLE: PLTCONT.CTB PLOTTED: 7/1/2011 3:48 PM BY: HUNT, AARON

XREFS: 09961X00 XBASEPILEELEV XVERTBARS XVERTBARSMIR XWEIRGATE XBLASTSITEFOR XSOILUPDATE XSOILDELINEATION
IMAGES: xtidegate
PROJECTNAME: -

0 10' 20' 30'
1"=10'

THIS BAR REPRESENTS ONE INCH ON THE ORIGINAL DRAWING: USE TO VERIFY FIGURE REPRODUCTION SCALE

| No. | Date | Revisions | By | Ckd |
|---|---|---|---|---|

THIS DRAWING IS THE PROPERTY OF THE ARCADIS ENTITY IDENTIFIED IN THE TITLE BLOCK AND MAY NOT BE REPRODUCED OR ALTERED IN WHOLE OR IN PART WITHOUT THE EXPRESS WRITTEN PERMISSION OF SAME.

| Professional Engineer's Name | | |
|---|---|---|
| AARON A HUNT | | |
| Professional Engineer's No. | | |
| 24GE04804300 | | |
| State | Date Signed | Project Mgr. |
| NJ | | RAR |
| Designed by | Drawn by | Checked by |
| AAH | AAH | RAK |

7/1/2011

ARCADIS

ARCADIS U.S., INC.
NEW JERSEY ENGINEERING CERTIFICATE OF AUTHORIZATION NUMBER 24GA27939600

TIERRA SOLUTIONS, INC. • LOWER PASSAIC RIVER, NEWARK, NJ
PHASE I CERCLA NON-TIME-CRITICAL REMOVAL ACTION

# ENCLOSURE ELEVATIONS STA.0+00 TO 2+75

STRUCTURAL

ARCADIS Project No. B0009964.0001
Date JULY 2011
ARCADIS 6723 TOWPATH ROAD BOX 66 SYRACUSE, NY 13214 TEL.: 315.446.9120

S-9

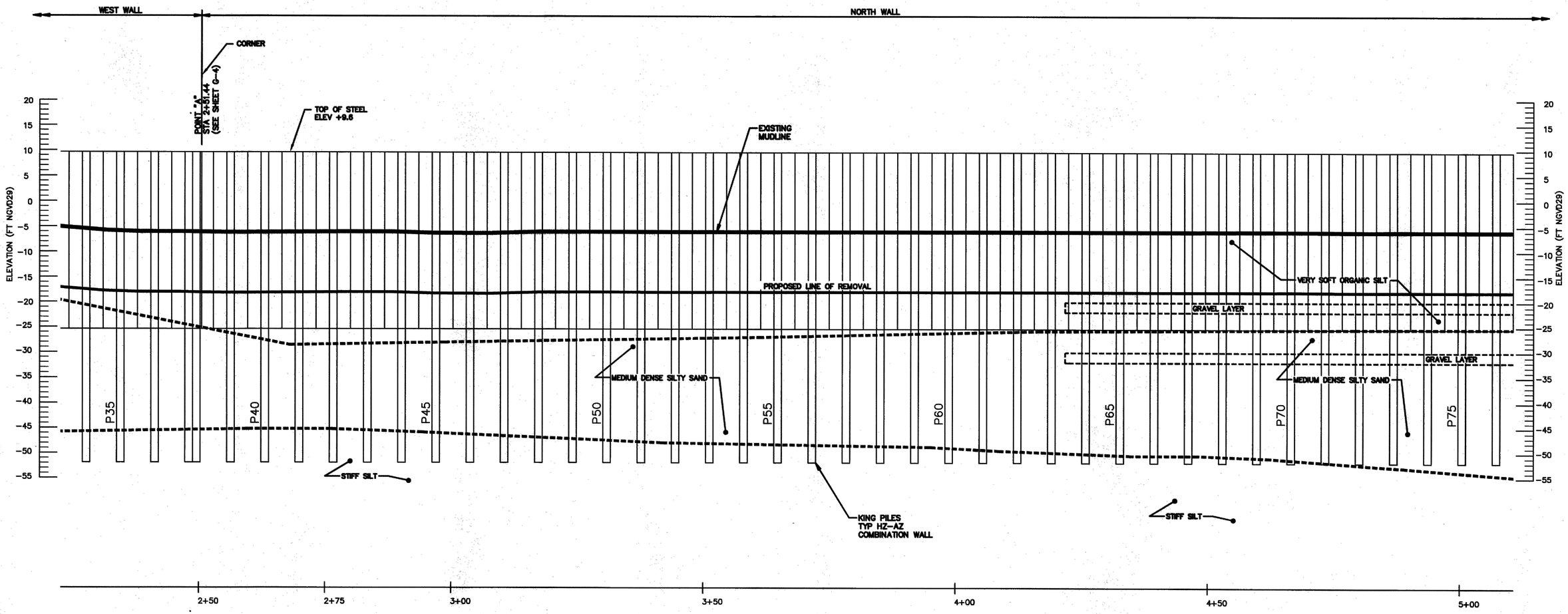


## ELEVATIONS STA 2+75 TO 5+10

1"=10'-0"

NOTE: ALL SOIL DELINEATIONS ARE ESTIMATED FROM AVAILABLE BORING INFORMATION AND SHOULD BE CONSIDERED APPROXIMATE.

CITY: TOLEDO-OH DIV/GROUP: DB:A. HUNT LD: PIC:R. ROMAGNOLI PM:R. ROMAGNOLI TM:R. ROMAGNOLI LYR: ON=*;OFF=*REF
\\CH2SFP01\Data\Project\B0009961.0000\Drawing\S-10 ELEV 275 510.dwg LAYOUT: ELE SAVED: 8/30/2011 12:41 PM ACADVER: 18.0S (LMS TECH) PAGESETUP: PDF 22X34 2010 VERSION DWG TO PDF.PC3 PLOTSTYLETABLE: PLTCONT.CTB PLOTTED: 7/1/2011 3:48 PM BY: HUNT, AARON

XREFS: 09961X00 XBASEPILEELEV XVERTBARS XVERTBATSMIR XVERTBATE XBASETESTBOR XSOILUPDATE XSOILDELINEATION
IMAGES:
PROJECTNAME: -

0 10' 20' 30'
1"=10'

THIS BAR REPRESENTS ONE INCH ON THE ORIGINAL DRAWING: USE TO VERIFY FIGURE REPRODUCTION SCALE

| No. | Date | Revisions | By | Ckd |
|---|---|---|---|---|

THIS DRAWING IS THE PROPERTY OF THE ARCADIS ENTITY IDENTIFIED IN THE TITLE BLOCK AND MAY NOT BE REPRODUCED OR ALTERED IN WHOLE OR IN PART WITHOUT THE EXPRESS WRITTEN PERMISSION OF SAME.

Professional Engineer's Name: AARON A HUNT
Professional Engineer's No.: 24GE04804300

| State | Date Signed | Project Mgr. |
|---|---|---|
| NJ | | RAR |
| Designed by | Drawn by | Checked by |
| AAH | AAH | RAK |

7/5/2011

ARCADIS

ARCADIS U.S., INC.
NEW JERSEY ENGINEERING CERTIFICATE OF AUTHORIZATION NUMBER 24GA27939600

TIERRA SOLUTIONS, INC. • LOWER PASSAIC RIVER, NEWARK, NJ
PHASE I CERCLA NON-TIME-CRITICAL REMOVAL ACTION

# ENCLOSURE ELEVATIONS STA 2+75 TO 5+10

STRUCTURAL

ARCADIS Project No. B0009964.0001
Date JULY 2011

ARCADIS
6723 TOWPATH ROAD
BOX 66
SYRACUSE, NY 13214
TEL: 315.446.9120

S-10

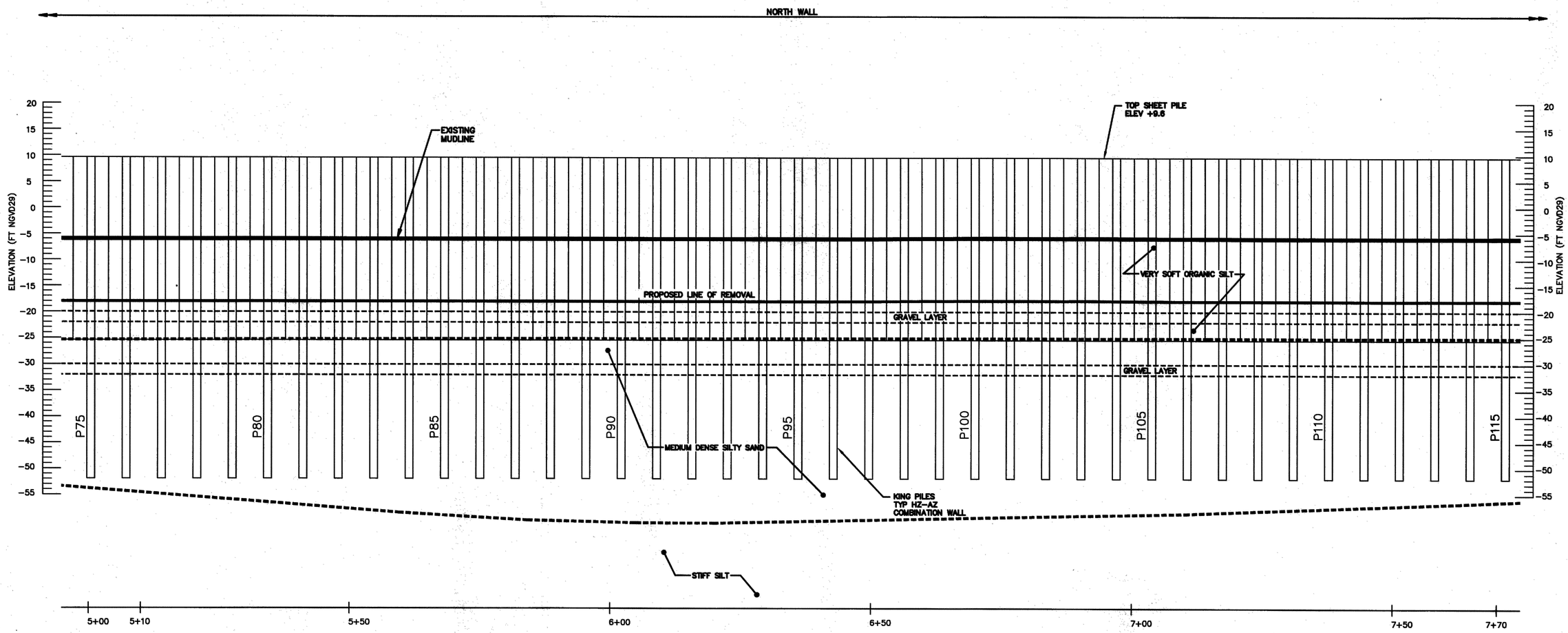


## ELEVATIONS STA 5+10 TO 7+70

1"=10'-0"

NOTE: ALL SOIL DELINEATIONS ARE ESTIMATED FROM AVAILABLE BORING INFORMATION AND SHOULD BE CONSIDERED APPROXIMATE.

CITY: TOLEDO-OH DIV/GROUP: DB:A. HUNT LD: PIC:R. ROMAGNOLI PM:R. ROMAGNOLI TM:R. ROMAGNOLI LYR: ON=*;OFF=*REF
\\CH2DFP01\Data\Project\B0009961.0000\Drawing\S-11 ELEV 510 770.dwg LAYOUT: PAPER SAVED: 6/30/2011 12:41 PM ACADVER: 18.0S (LMS TECH) PAGESETUP: PDF 22X34 2010 VERSION DWG TO PDF.PC3 PLOTSTYLETABLE: PLTCONT.CTB PLOTTED: 7/1/2011 3:48 PM BY: HUNT, AARON

XREFS: 09961X00 XBASEPILEELEV XVERTBARS XVERTBARSMIR XWEIRGATE XBASETESTPOR XSOILUTATE XSOILDELINEATION
IMAGES:
PROJECTNAME: -

0 10' 20' 30'
1"=10'

THIS BAR REPRESENTS ONE INCH ON THE ORIGINAL DRAWING: USE TO VERIFY FIGURE REPRODUCTION SCALE

| No. | Date | Revisions | By | Ckd |
|---|---|---|---|---|

THIS DRAWING IS THE PROPERTY OF THE ARCADIS ENTITY IDENTIFIED IN THE TITLE BLOCK AND MAY NOT BE REPRODUCED OR ALTERED IN WHOLE OR IN PART WITHOUT THE EXPRESS WRITTEN PERMISSION OF SAME.

Professional Engineer's Name: AARON A HUNT
Professional Engineer's No.: 24GE04804300

| State | Date Signed | Project Mgr. |
|---|---|---|
| NJ | | RAR |
| Designed by AAH | Drawn by AAH | Checked by RAK |

7-5-2011

ARCADIS

ARCADIS U.S., INC.
NEW JERSEY ENGINEERING CERTIFICATE OF AUTHORIZATION NUMBER 24GA27939600

TIERRA SOLUTIONS, INC. • LOWER PASSAIC RIVER, NEWARK, NJ
PHASE I CERCLA NON-TIME-CRITICAL REMOVAL ACTION

# ENCLOSURE ELEVATIONS STA 5+10 TO 7+70

STRUCTURAL

ARCADIS Project No. B0009964.0001
Date JULY 2011

ARCADIS
6723 TOWPATH ROAD
BOX 66
SYRACUSE, NY 13214
TEL: 315.446.9120

S-11

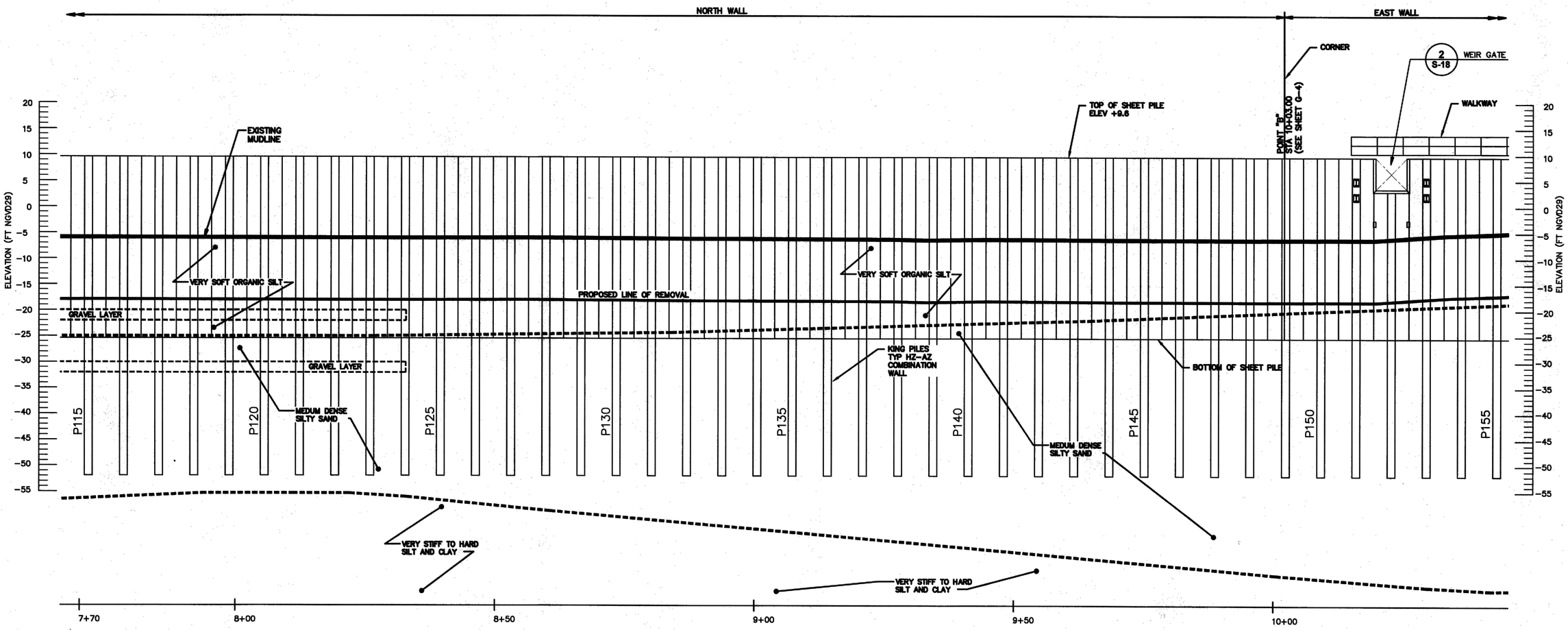


NOTE: ALL SOIL DELINEATIONS ARE ESTIMATED FROM AVAILABLE BORING INFORMATION AND SHOULD BE CONSIDERED APPROXIMATE.

## ELEVATIONS STA 7+70 TO 10+40

1"=10'-0"

CITY: TOLEDO-OH DIV/GROUP: DB:A. HUNT LD: PIC:R. ROMAGNOLI PM:R. ROMAGNOLI TM:R. ROMAGNOLI LYR: ON=*;OFF=*REF
\\OHI03FP01\Data\Projects\B0009961.0000\Drawing\S-12 ELEV 770 TO 1040.dwg LAYOUT: EAST SAVED: 8/30/2011 12:42 PM ACADVER: 18.0S (LMS TECH) PAGESETUP: PDF 22X34 2010 VERSION DWG TO PDF.PC3 PLOTSTYLETABLE: PLTCONT.CTB PLOTTED: 7/1/2011 3:48 PM BY: HUNT, AARON

XREFS: 09961X00 XBASEPILEELEV XVERTBARSMIR XVERTBARS XWEIRGATE XBASETESTBOR XSOILUPDATE XSOILDELINEATION
IMAGES:
PROJECTNAME: -

0 10' 20' 30'
1"=10'

THIS BAR REPRESENTS ONE INCH ON THE ORIGINAL DRAWING:

USE TO VERIFY FIGURE REPRODUCTION SCALE

| No. | Date | Revisions | By | Ckd |
|---|---|---|---|---|

THIS DRAWING IS THE PROPERTY OF THE ARCADIS ENTITY IDENTIFIED IN THE TITLE BLOCK AND MAY NOT BE REPRODUCED OR ALTERED IN WHOLE OR IN PART WITHOUT THE EXPRESS WRITTEN PERMISSION OF SAME.

| Professional Engineer's Name | | |
|---|---|---|
| AARON A HUNT | | |
| Professional Engineer's No. | | |
| 24GE04804300 | | |
| State NJ | Date Signed | Project Mgr. RAR |
| Designed by AAH | Drawn by AAH | Checked by RAK |

7/5/2011

ARCADIS

ARCADIS U.S., INC.
NEW JERSEY ENGINEERING CERTIFICATE OF AUTHORIZATION NUMBER 24GA27939600

TIERRA SOLUTIONS, INC. • LOWER PASSAIC RIVER, NEWARK, NJ
PHASE I CERCLA NON-TIME-CRITICAL REMOVAL ACTION

# ENCLOSURE ELEVATIONS STA 7+70 TO 10+40

STRUCTURAL

ARCADIS Project No.
B0009964.0001

Date
JULY 2011

ARCADIS
6723 TOWPATH ROAD
BOX 66
SYRACUSE, NY 13214
TEL: 315.446.9120

S-12

| DESCRIPTION OF WORK | | WIDTH | AMOUNT REMOVED LENGTH (FRONT) | AMOUNT REMOVED LENGTH (BACK) | DESCRIPTION OF WORK | | WIDTH | AMOUNT REMOVED LENGTH (FRONT) | AMOUNT REMOVED LENGTH (BACK) |
|---|---|---|---|---|---|---|---|---|---|
| Wale | Tieback # | [INCHES] | [INCHES] | [INCHES] | Wale | Tieback # | [INCHES] | [INCHES] | [INCHES] |
| 7W2 | 1 | 7 | Not Used | Not Used | 4W2 | 20 | 7 | 1 | 1.5 |
| 7W2 | 2 | 7 | 1 | 2 | 4W2 | 21 | 7 | 1 | 1.5 |
| 7W1 | 3 | 7 | - | - | 4W2 | 22 | 7 | 3 | 2 |
| 7W1 | 4 | 7 | - | 3 | 4W1 | 23 | 7 | 1.5 | 3 |
| 7W1 | 5 | 7 | - | - | 4W1 | 24 | 7 | 2 | 2 |
| 7W1 | 6 | 7 | - | 5 | 4W1 | 25 | 7 | 2 | 2 |
| 6W2 | 7 | 7 | - | 4 | 3W2 | 26 | 7 | 3.5 | 5 |
| 6W2 | 8 | 7 | - | 4.5 | 3W2 | 27 | 7 | 2 | 2 |
| 6W2 | 9 | 7 | 1 | 3 | 3W2 | 28 | 7 | 3 | 2 |
| 6W1 | 10 | 7 | 3 | 3 | 3W1 | 29 | 7 | 2.5 | 3 |
| 6W1 | 11 | 7 | 1 | 2 | 3W1 | 30 | 7 | 1.5 | 2 |
| 6W1 | 12 | 7 | 1 | 2 | 3W1 | 31 | 7 | 1.5 | 1.5 |
| 5W2.2 | 13 | 7 | 1 | 3 | 2W3 | 32 | 7 | 2 | 2 |
| 5W2.2 | 14 | 7 | 1 | 3 | 2W3 | 33 | 7 | 3 | 5 |
| 5W2.1 | 15 | 7 | 3 | 1.5 | 2W3 | 34 | 7 | 3 | 5 |
| 5W2.1 | 16 | 7 | 1 | 1 | 2W2 | 35 | 7 | 1 | 4 |
| 5W1 | 17 | 7 | 1 | 2 | 2W2 | 36 | 7 | 2.5 | 3.5 |
| 5W1 | 18 | 7 | 0.5 | - | 2W1 | 37 | 7 | 2 | 3 |
| 5W1 | 19 | 7 | 2 | 0.5 | 2W1 | 38 | 7 | - | - |

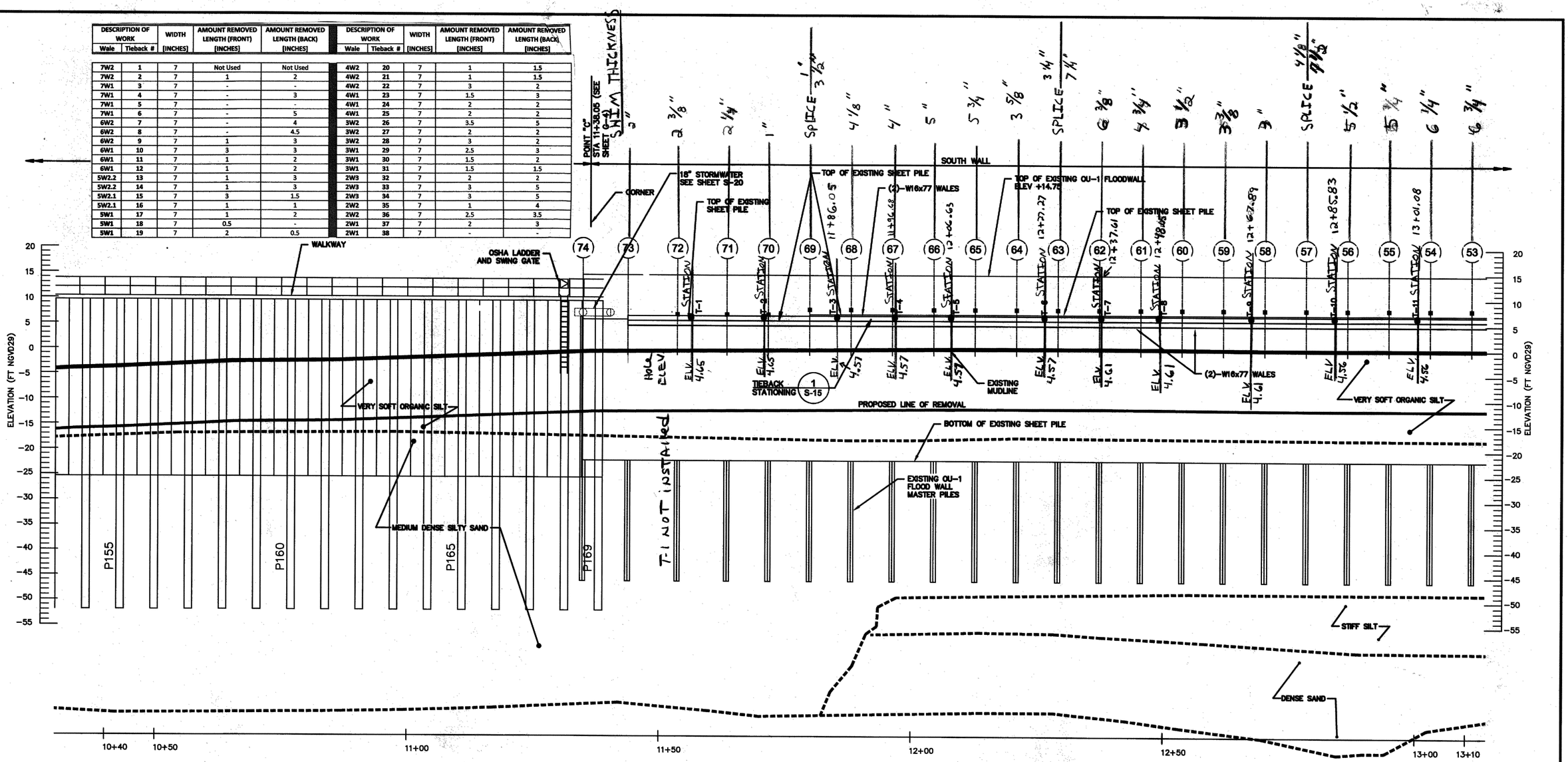


NOTE: ALL SOIL DELINEATIONS ARE ESTIMATED FROM AVAILABLE BORING INFORMATION AND SHOULD BE CONSIDERED APPROXIMATE.

## ELEVATIONS STA 10+40 TO 13+10

1"=10'-0"

CITY: TOLEDO-OH DIV/GROUP: DB:A. HUNT LD: PIC:R. ROMAGNOLI PM:R. ROMAGNOLI TM:R. ROMAGNOLI LYR: ON=*;OFF=REF
\\OHD3FP01\Data\Project\B0009861.0000\Drawing\S-13 ELEV 1040 1310.dwg LAYOUT: ENCLOSURE OU1 WALL SAVED: 6/30/2011 12:42 PM ACADVER: 18.0S (LMS TECH) PAGESETUP: PDF 22X34 2010 VERSION DWG TO PDF.PC3 PLOTSTYLETABLE: PLTCONT.CTB PLOTTED: 7/1/2011 3:48 PM
BY: HUNT, AARON

XREFS: 09861X00 XBASEPILEELEV XVERTBARS XVERTBARSMIR XVERTGATE xtidegate XBASETESTBOR XSOILUPDATE XSOILDELINEATION
IMAGES:
PROJECTNAME: -

0 10' 20' 30'
1"=10'

THIS BAR REPRESENTS ONE INCH ON THE ORIGINAL DRAWING:

USE TO VERIFY FIGURE REPRODUCTION SCALE

| No. | Date | Revisions | By | Ckd |
|---|---|---|---|---|

THIS DRAWING IS THE PROPERTY OF THE ARCADIS ENTITY IDENTIFIED IN THE TITLE BLOCK AND MAY NOT BE REPRODUCED OR ALTERED IN WHOLE OR IN PART WITHOUT THE EXPRESS WRITTEN PERMISSION OF SAME.

Professional Engineer's Name: AARON A HUNT
Professional Engineer's No.: 24GE04804300

| State | Date Signed | Project Mgr. |
|---|---|---|
| NJ | | RAR |
| Designed by | Drawn by | Checked by |
| AAH | AAH | RAK |

7/5/2011

ARCADIS
ARCADIS U.S., INC.
NEW JERSEY ENGINEERING CERTIFICATE OF AUTHORIZATION NUMBER 24GA27939600

TIERRA SOLUTIONS, INC. • LOWER PASSAIC RIVER, NEWARK, NJ
PHASE I CERCLA NON-TIME-CRITICAL REMOVAL ACTION

# ENCLOSURE ELEVATIONS STA 10+40 TO 13+10

STRUCTURAL

ARCADIS Project No. B0009964.0001
Date JULY 2011
ARCADIS 6723 TOWPATH ROAD BOX 66 SYRACUSE, NY 13214 TEL: 315.446.9120

S-13

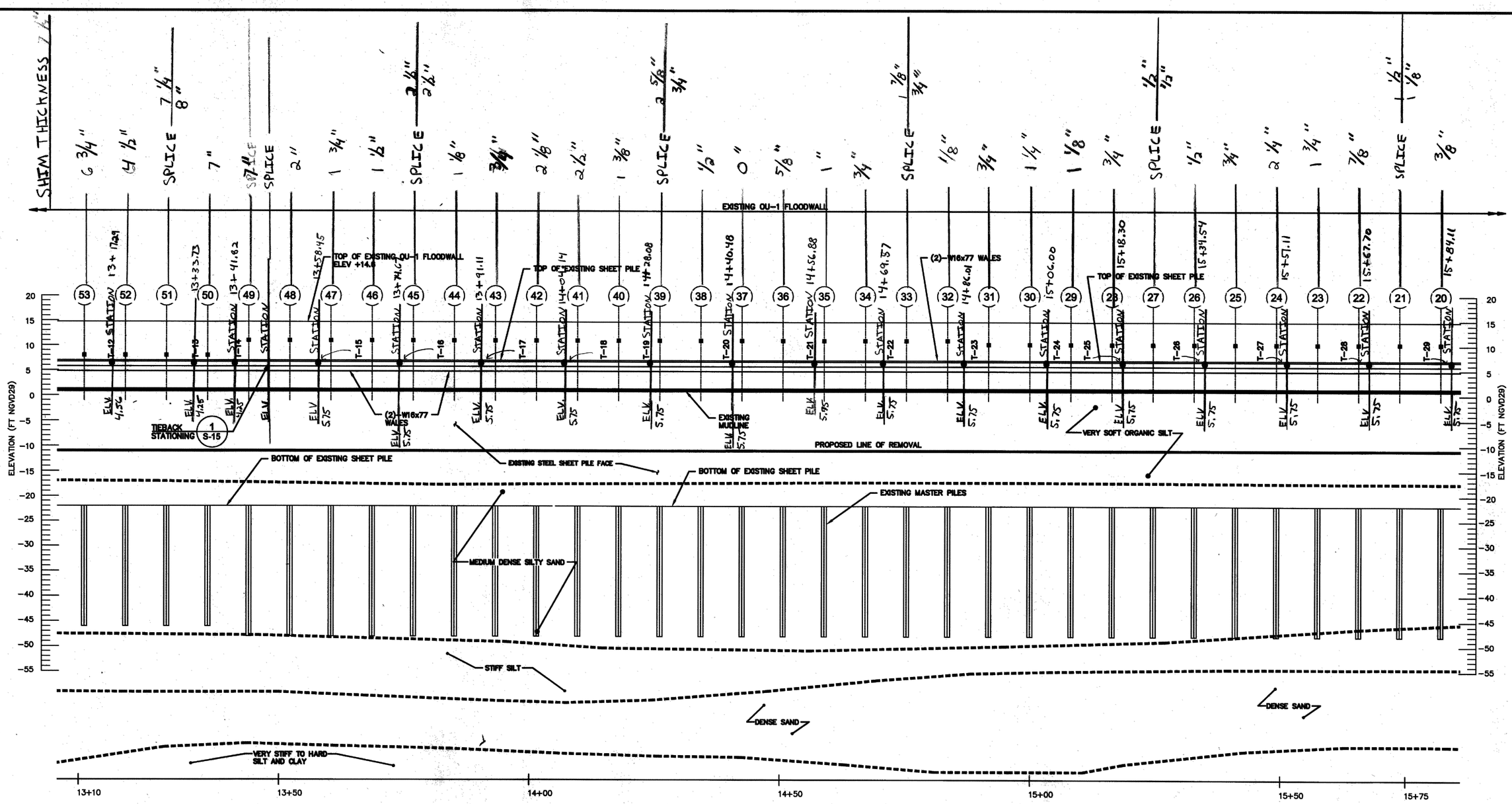


NOTE: ALL SOIL DELINEATIONS ARE ESTIMATED FROM AVAILABLE BORING INFORMATION AND SHOULD BE CONSIDERED APPROXIMATE.

## ELEVATIONS STA 13+10 TO 15+75

1"=10'-0"

CITY: TOLEDO-OH DIV/GROUP: DB:A. HUNT LD: PIC:R. ROMAGNOLI PM:R. ROMAGNOLI TM:R. ROMAGNOLI LYR: ON=*;OFF=*REF
NOH\SPP\Data\Project\B0009861.0000\Drawing\S-14 ELEV 1310 1575.dwg LAYOUT: ENCLOSURE WALL2 SAVED: 6/30/2011 12:43 PM ACADVER: 18.0S (LMS TECH) PAGESETUP: PDF 22X34 2010 VERSION DWG TO PDF.PC3 PLOTSTYLETABLE: PLTCONT.CTB PLOTTED: 7/1/2011 3:48 PM BY:
HUNT, AARON

XREFS: 09861X00 XBASEPLEELEV XCROSSBRACEMIR XVERTBARS XWEIRGATE XBASETESTBOR XSOILUPDATE XSOILDELINEATION IMAGES: PROJECTNAME: -

0 10' 20' 30'
1"=10'

THIS BAR REPRESENTS ONE INCH ON THE ORIGINAL DRAWING: USE TO VERIFY FIGURE REPRODUCTION SCALE

| No. | Date | Revisions | By | Ckd |
|---|---|---|---|---|

THIS DRAWING IS THE PROPERTY OF THE ARCADIS ENTITY IDENTIFIED IN THE TITLE BLOCK AND MAY NOT BE REPRODUCED OR ALTERED IN WHOLE OR IN PART WITHOUT THE EXPRESS WRITTEN PERMISSION OF SAME.

Professional Engineer's Name: AARON A HUNT
Professional Engineer's No.: 24GE04804300
State: NJ | Date Signed: | Project Mgr.: RAR
Designed by: AAH | Drawn by: AAH | Checked by: RAK

7-5-2011

ARCADIS
ARCADIS U.S., INC.
NEW JERSEY ENGINEERING CERTIFICATE OF AUTHORIZATION NUMBER 24GA27939600

TIERRA SOLUTIONS, INC. • LOWER PASSAIC RIVER, NEWARK, NJ
PHASE I CERCLA NON-TIME-CRITICAL REMOVAL ACTION

# ENCLOSURE ELEVATIONS STA 13+10 TO 15+75

STRUCTURAL

ARCADIS Project No. B0009964.0001
Date JULY 2011

ARCADIS
6723 TOWPATH ROAD
BOX 66
SYRACUSE, NY 13214
TEL: 315.446.9120

S-14

| TIEBACK ID | STATION | INCREMENT TO NEXT TIEBACK | TIEBACK ID | STATION | INCREMENT TO NEXT TIEBACK | TIEBACK ID | STATION | INCREMENT TO NEXT TIEBACK |
|---|---|---|---|---|---|---|---|---|
| T-1 | 11+56.27 | 14.42 FT | T-14 | 13+41.82 | 16.63 FT | T-27 | 15+51.28 | 16.42 FT |
| T-2 | 11+70.69 | 15.36 FT | T-15 | 13+58.45 | 16.22 FT | T-28 | 15+67.70 | 16.41 FT |
| T-3 | 11+86.05 | 10.63 FT | T-16 | 13+74.67 | 16.44 FT | T-29 | 15+84.11 | 16.41 FT |
| T-4 | 11+96.68 | 10.20 FT | T-17 | 13+91.11 | 13.03 FT | T-30 | 16+00.52 | 16.41 FT |
| T-5 | 12+06.88 | 20.13 FT | T-18 | 14+04.14 | 19.94 FT | T-31 | 16+16.93 | 16.41 FT |
| T-6 | 12+27.19 | 10.42 FT | T-19 | 14+24.08 | 16.40 FT | T-32 | 16+33.34 | 16.66 FT |
| T-7 | 12+37.61 | 10.50 FT | T-20 | 14+40.48 | 16.40 FT | T-33 | 16+50.00 | 16.67 FT |
| T-8 | 12+48.11 | 20.13 FT | T-21 | 14+56.88 | 12.69 FT | T-34 | 16+66.67 | 19.78 FT |
| T-9 | 12+68.24 | 16.26 FT | T-22 | 14+69.57 | 16.44 FT | T-35 | 16+86.45 | 12.81 FT |
| T-10 | 12+84.50 | 16.58 FT | T-23 | 14+86.01 | 19.99 FT | T-36 | 16+99.26 | 16.49 FT |
| T-11 | 13+01.08 | 16.21 FT | T-24 | 15+06.00 | 12.47 FT | T-37 | 17+15.72 | 14.14 FT |
| T-12 | 13+17.29 | 16.44 FT | T-25 | 15+18.47 | 16.40 FT | T-38 | 17+29.86 | |
| T-13 | 13+33.73 | 8.09 FT | T-26 | 15+34.87 | 16.41 FT | | | |

## TIEBACK STATION LOCATIONS (1)

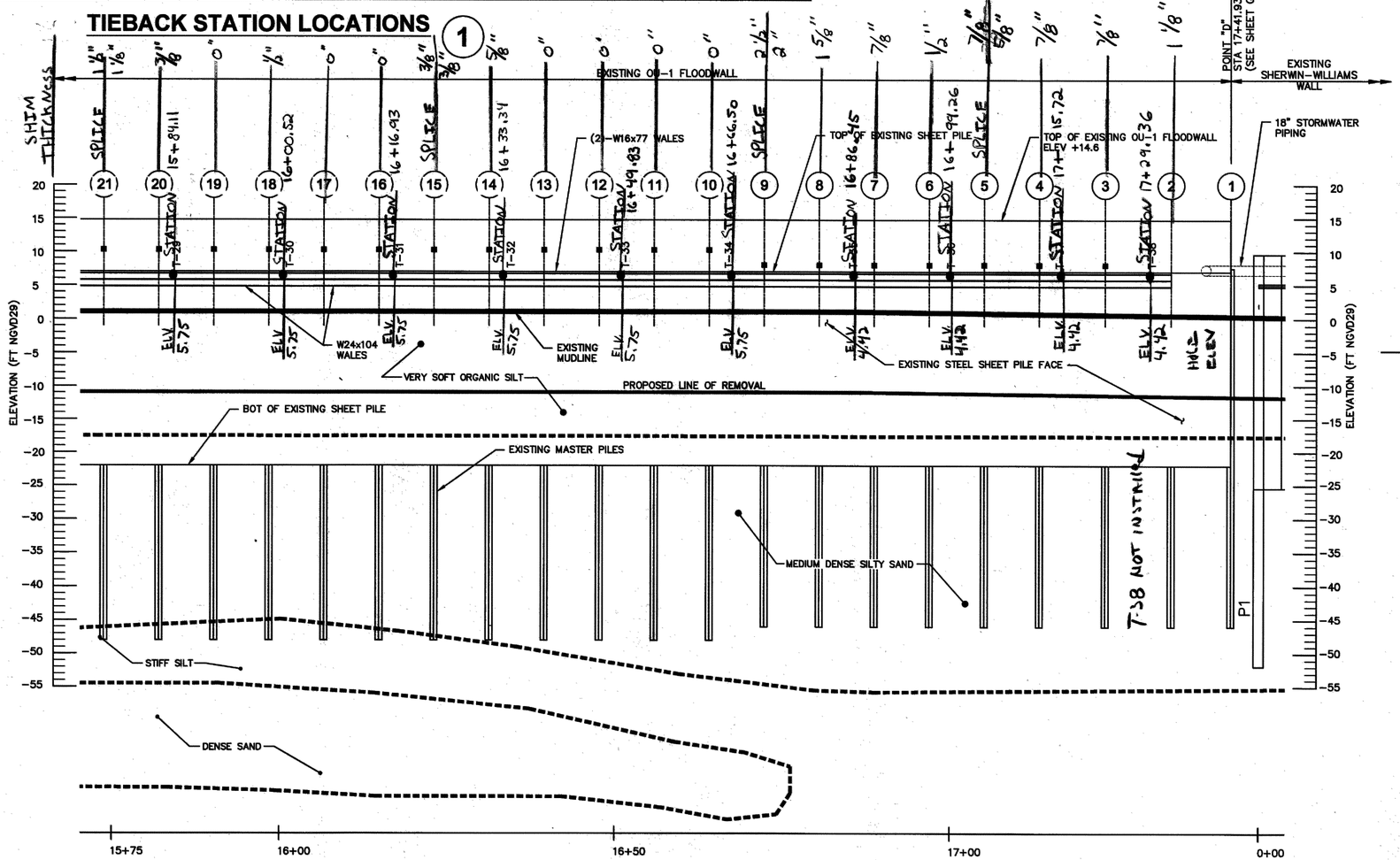


## ELEVATIONS STA 15+75 TO 17+50

1"=10'-0"

NOTE: ALL SOIL DELINEATIONS ARE ESTIMATED FROM AVAILABLE BORING INFORMATION AND SHOULD BE CONSIDERED APPROXIMATE.

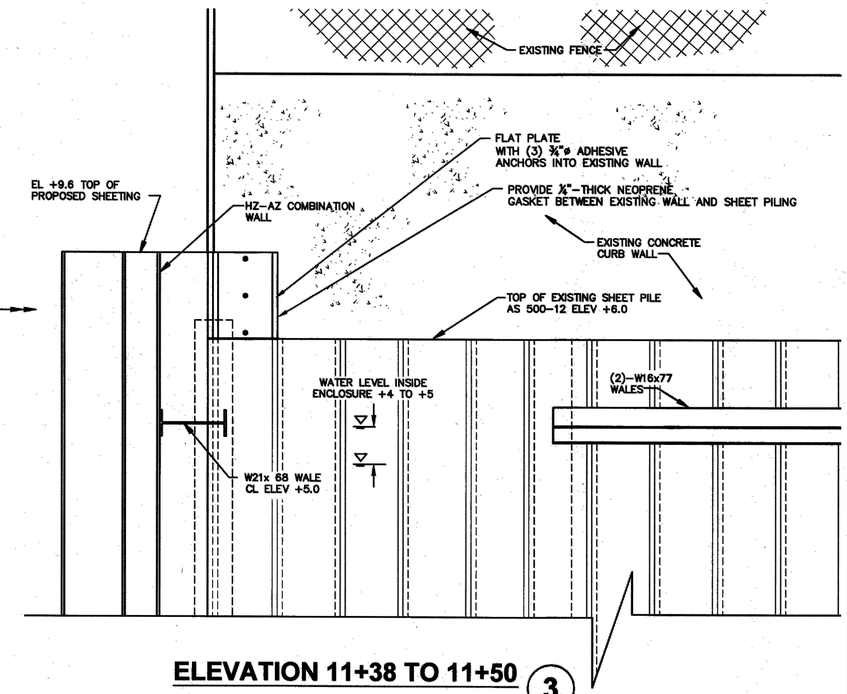


## ELEVATION 11+38 TO 11+50 (3)

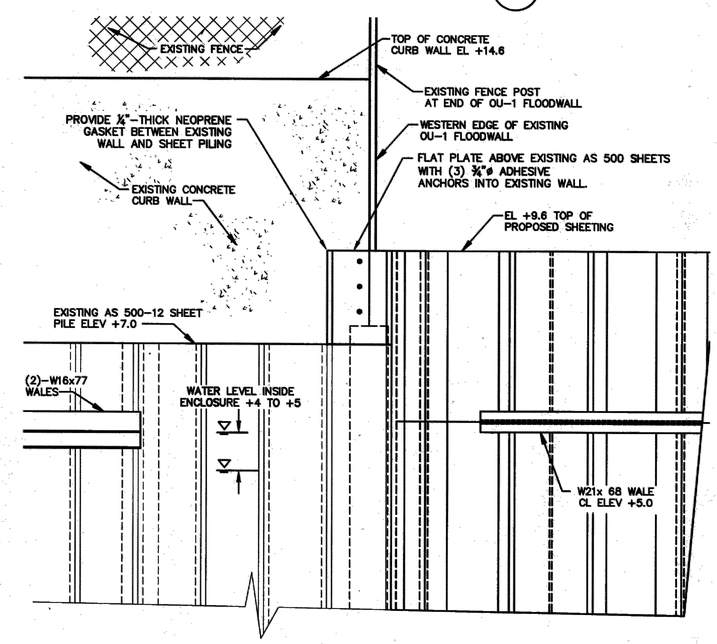


## ELEVATION 17+25 TO 0+00 (2)

XREFS: 09961X00 XBASEPILEELEV XVERTBARSMIR XVERTBARS XWEIRGATE XBASETESTBOR XSOILUPDATE XSOILDELINEATION
IMAGES:
PROJECTNAME: -

CITY: TOLEDO-OH DIV/GROUP: DBA: HUNT LD: PIC:R. ROMAGNOLI PM:R. ROMAGNOLI TM:R. ROMAGNOLI LYR: ON=*;OFF=*REF
NOH03PP01\Data\Project\B0009961.0000\Drawing\S-15 ELEV 1575 1750.dwg LAYOUT: ENCLOSURE WALL SAVED: 6/30/2011 12:44 PM ACADVER: 18.0S (LMS TECH) PAGESETUP: PDF 22X34 2010 VERSION DWG TO PDF.PC3 PLOTSTYLETABLE: PLTCONT.CTB PLOTTED: 7/1/2011 3:48 PM BY: HUNT, AARON

0 10' 20' 30'
1"=10'

THIS BAR REPRESENTS ONE INCH ON THE ORIGINAL DRAWING: USE TO VERIFY FIGURE REPRODUCTION SCALE

| No. | Date | Revisions | By | Ckd |
|---|---|---|---|---|

THIS DRAWING IS THE PROPERTY OF THE ARCADIS ENTITY IDENTIFIED IN THE TITLE BLOCK AND MAY NOT BE REPRODUCED OR ALTERED IN WHOLE OR IN PART WITHOUT THE EXPRESS WRITTEN PERMISSION OF SAME.

Professional Engineer's Name: AARON A HUNT
Professional Engineer's No.: 24GE04804300
State: NJ | Date Signed: | Project Mgr.: RAR
Designed by: AAH | Drawn by: AAH | Checked by: RAK

7/1/2011

ARCADIS
ARCADIS U.S., INC.
NEW JERSEY ENGINEERING CERTIFICATE OF AUTHORIZATION NUMBER 24GA27939600

TIERRA SOLUTIONS, INC. • LOWER PASSAIC RIVER, NEWARK, NJ
PHASE I CERCLA NON-TIME-CRITICAL REMOVAL ACTION

# ENCLOSURE ELEVATIONS STA 15+75 TO 17+50

STRUCTURAL

ARCADIS Project No. B0009964.0001
Date JULY 2011
ARCADIS 6723 TOWPATH ROAD BOX 66 SYRACUSE, NY 13214 TEL: 315.446.9120

S-15

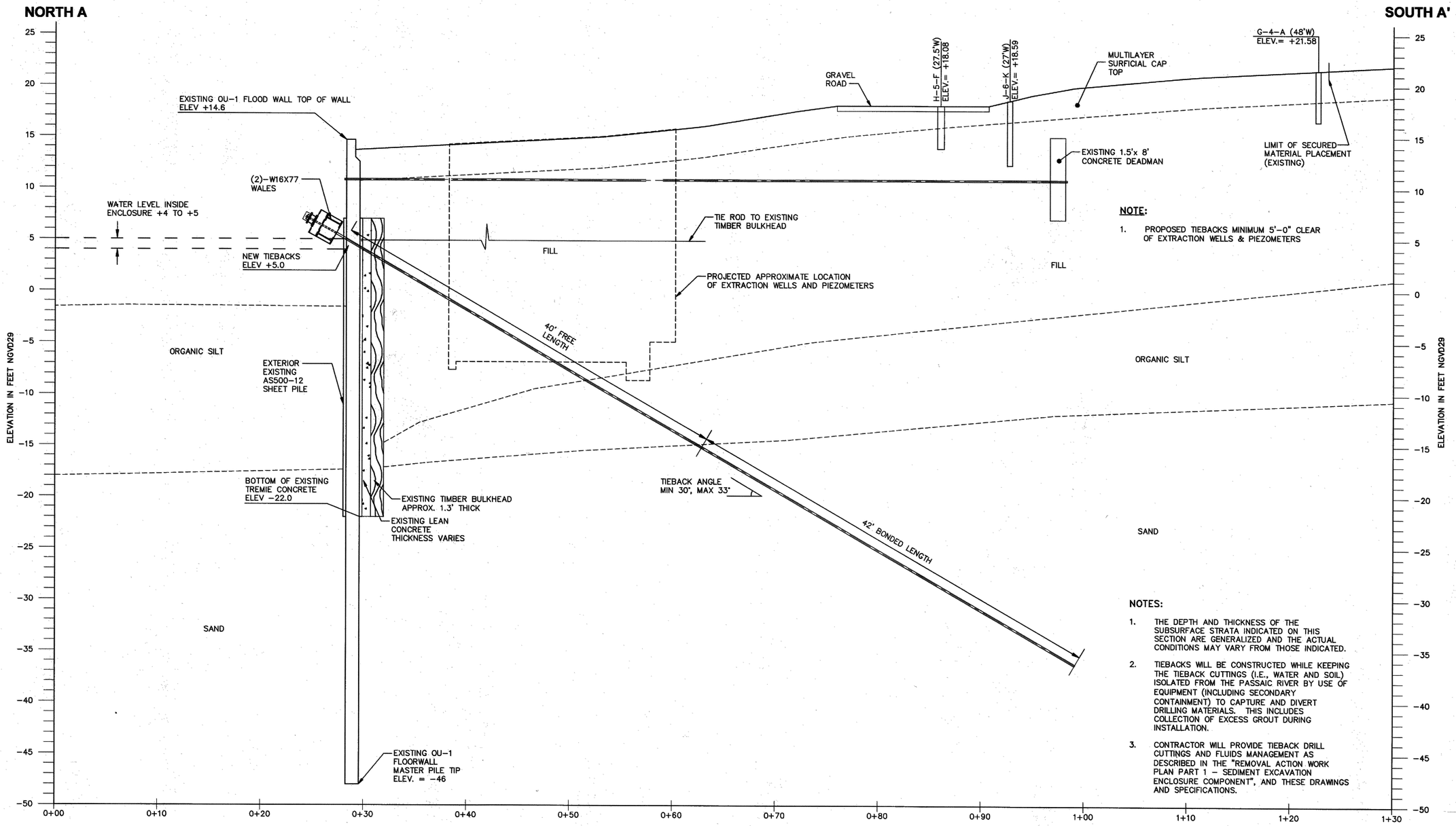


**NOTE:**

1. PROPOSED TIEBACKS MINIMUM 5'-0" CLEAR OF EXTRACTION WELLS & PIEZOMETERS

**NOTES:**

1. THE DEPTH AND THICKNESS OF THE SUBSURFACE STRATA INDICATED ON THIS SECTION ARE GENERALIZED AND THE ACTUAL CONDITIONS MAY VARY FROM THOSE INDICATED.
2. TIEBACKS WILL BE CONSTRUCTED WHILE KEEPING THE TIEBACK CUTTINGS (I.E., WATER AND SOIL) ISOLATED FROM THE PASSAIC RIVER BY USE OF EQUIPMENT (INCLUDING SECONDARY CONTAINMENT) TO CAPTURE AND DIVERT DRILLING MATERIALS. THIS INCLUDES COLLECTION OF EXCESS GROUT DURING INSTALLATION.
3. CONTRACTOR WILL PROVIDE TIEBACK DRILL CUTTINGS AND FLUIDS MANAGEMENT AS DESCRIBED IN THE "REMOVAL ACTION WORK PLAN PART 1 – SEDIMENT EXCAVATION ENCLOSURE COMPONENT", AND THESE DRAWINGS AND SPECIFICATIONS.

## TYPICAL TIEBACK SECTION

1" = 5'-0"

1

CITY: TOLEDO-OH DIV/GROUP: DB:A HUNT LD: PIC:R. ROMAGNOLI PM:R. ROMAGNOLI TM:R. ROMAGNOLI LYR: ON=*;OFF=*REF
\\OHI03FP01\Data\Project\B0009861.0000\Drawing\S-16 SECTION TIEBACK.dwg LAYOUT: SECTIONSTIEBACK SAVED: 6/30/2011 12:44 PM ACADVER: 18.0S (LMS TECH) PAGESETUP: PDF 22X34 2010 VERSION DWG TO PDF.PC3 PLOTSTYLETABLE: PLTCONT.CTB PLOTTED: 7/1/2011 3:48 PM BY:
HUNT, AARON
XREFS: 0986TX00 IMAGES: PROJECTNAME: -

0 5' 10'
GRAPHIC SCALE

THIS BAR REPRESENTS ONE INCH ON THE ORIGINAL DRAWING: USE TO VERIFY FIGURE REPRODUCTION SCALE

| No. | Date | Revisions | By | Ckd |
|---|---|---|---|---|

THIS DRAWING IS THE PROPERTY OF THE ARCADIS ENTITY IDENTIFIED IN THE TITLE BLOCK AND MAY NOT BE REPRODUCED OR ALTERED IN WHOLE OR IN PART WITHOUT THE EXPRESS WRITTEN PERMISSION OF SAME.

Professional Engineer's Name: AARON A HUNT
Professional Engineer's No.: 24GE04804300

| State | Date Signed | Project Mgr. |
|---|---|---|
| NJ | | RAR |
| Designed by | Drawn by | Checked by |
| AAH | AAH | RAK |

7/5/2011

ARCADIS
ARCADIS U.S., INC.
NEW JERSEY ENGINEERING CERTIFICATE OF AUTHORIZATION NUMBER 24GA27939600

TIERRA SOLUTIONS, INC. • LOWER PASSAIC RIVER, NEWARK, NJ
PHASE I CERCLA NON-TIME-CRITICAL REMOVAL ACTION

# OU-1 FLOODWALL SECTION AT TIEBACK

STRUCTURAL

ARCADIS Project No. B0009964.0001
Date JULY 2011
ARCADIS 6723 TOWPATH ROAD BOX 66 SYRACUSE, NY 13214 TEL: 315.446.9120

S-16

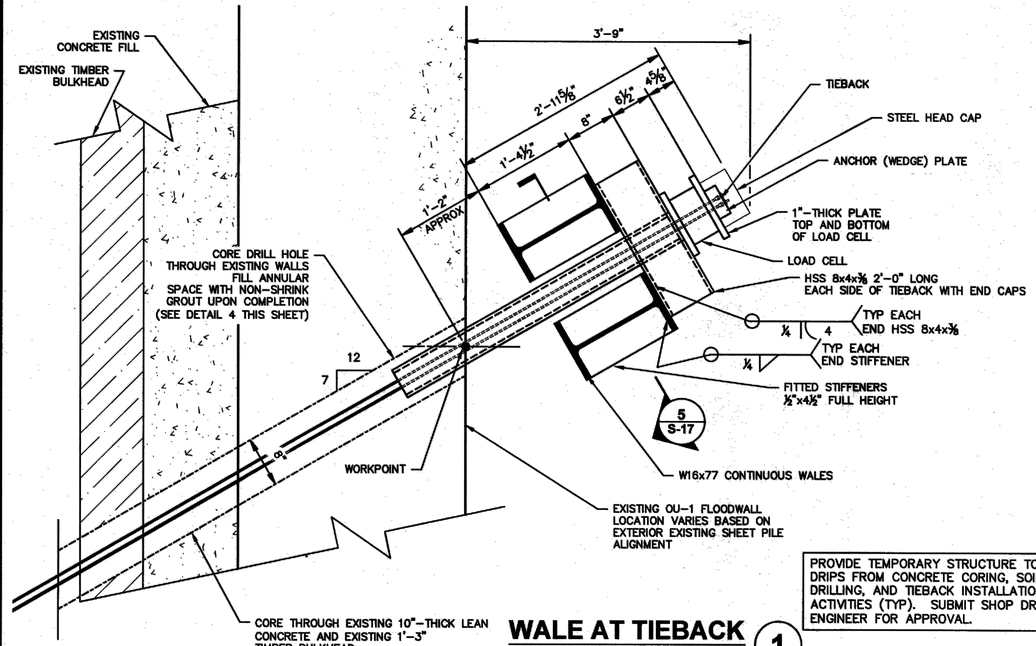


PROVIDE TEMPORARY STRUCTURE TO CONTAIN DRIPS FROM CONCRETE CORING, SOIL DRILLING, AND TIEBACK INSTALLATION ACTIVITIES (TYP). SUBMIT SHOP DRAWING TO ENGINEER FOR APPROVAL.

## WALE AT TIEBACK (1)

SCALE: ½"=1'-0"

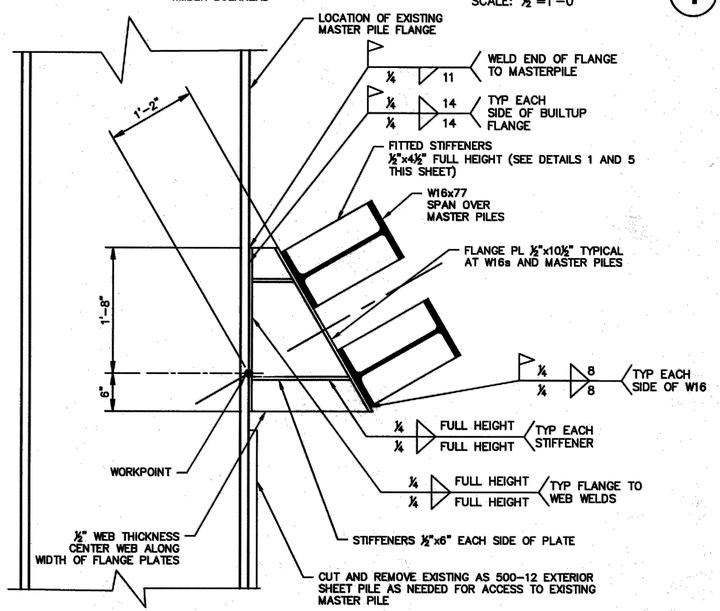


## WALE TO MASTER PILE CONNECTION (2)

SCALE: ½"=1'-0"

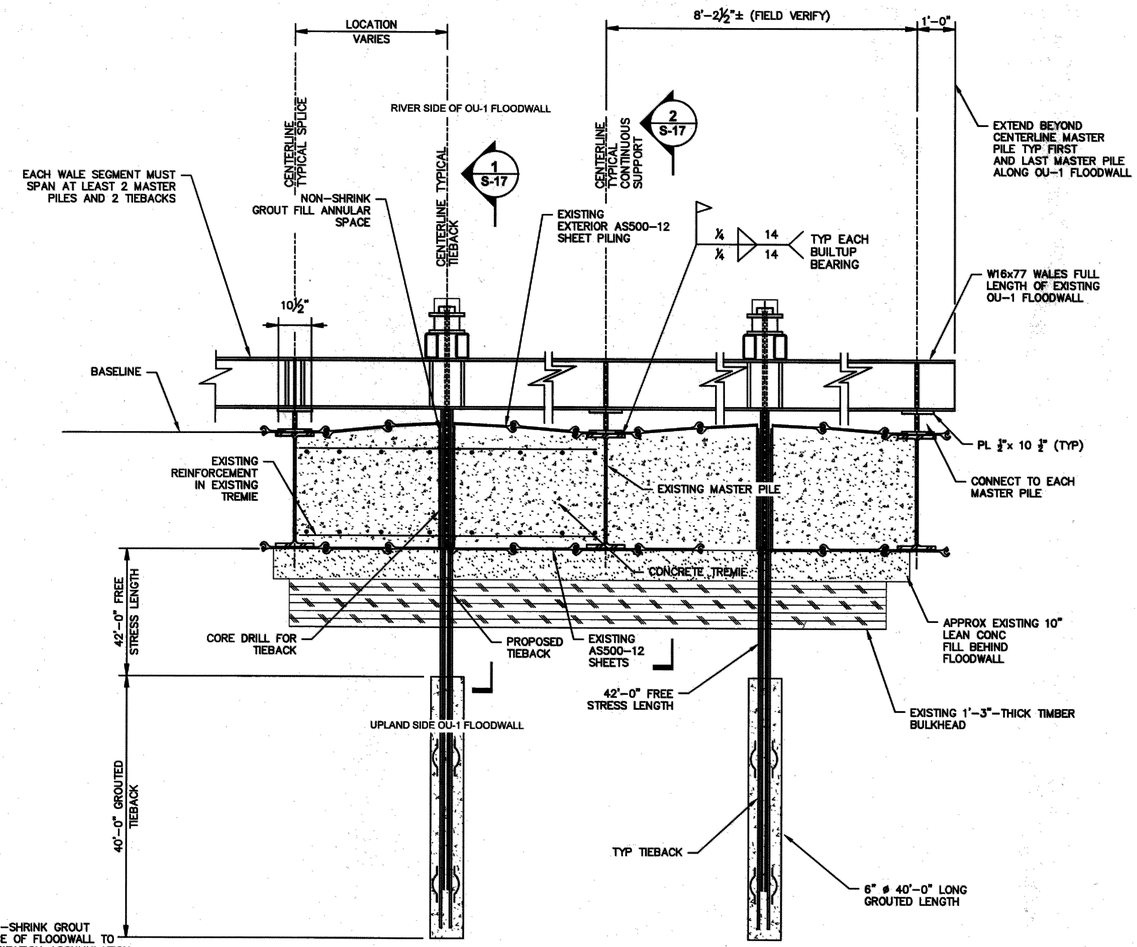


## PLAN AT TYPICAL TIEBACK (3)

SCALE: ½"=1'-0"

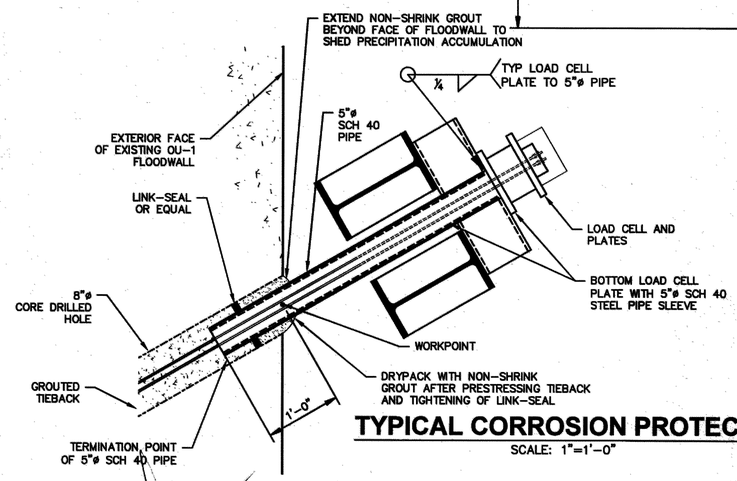


## TYPICAL CORROSION PROTECTION (4)

SCALE: 1"=1'-0"

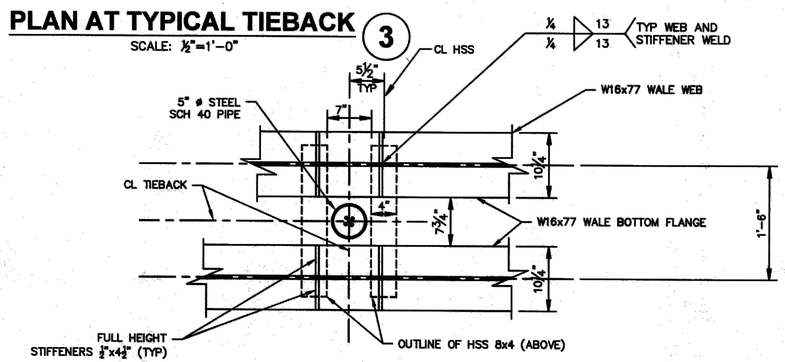


## WALE STIFFENERS (5)

SCALE: 1"=1'-0"

0' 1' 2' 3' 4' 5' 6'
1/2"=1'-0"

THIS BAR REPRESENTS ONE INCH ON THE ORIGINAL DRAWING: USE TO VERIFY FIGURE REPRODUCTION SCALE

| No. | Date | Revisions | By | Ckd |
|---|---|---|---|---|

THIS DRAWING IS THE PROPERTY OF THE ARCADIS ENTITY IDENTIFIED IN THE TITLE BLOCK AND MAY NOT BE REPRODUCED OR ALTERED IN WHOLE OR IN PART WITHOUT THE EXPRESS WRITTEN PERMISSION OF SAME.

Professional Engineer's Name: AARON A HUNT
Professional Engineer's No.: 24GE04804300

| State | Date Signed | Project Mgr. |
|---|---|---|
| NJ | | RAR |
| Designed by AAH | Drawn by AAH | Checked by RAK |

ARCADIS

ARCADIS U.S., INC.
NEW JERSEY ENGINEERING CERTIFICATE OF AUTHORIZATION NUMBER 24GA27939600

TIERRA SOLUTIONS, INC. • LOWER PASSAIC RIVER, NEWARK, NJ
PHASE I CERCLA NON-TIME-CRITICAL REMOVAL ACTION

# TIEBACK PLANS AND SECTIONS

STRUCTURAL

ARCADIS Project No. B0009964.0001
Date JULY 2011

ARCADIS
6723 TOWPATH ROAD
BOX 66
SYRACUSE, NY 13214
TEL: 315.446.9120

S-17

CITY: TOLEDO-OH DIV/GROUP: DBA: HUNT LD: PIC:R. ROMAGNOLI PM:R. ROMAGNOLI TM:R. ROMAGNOLI LYR: ON=*;OFF=*REF
NO:H3FP01D:\data\Project\B0009961.0000\Drawing\S-17 TIEBACK PLANS AND SECTIONS.dwg LAYOUT: TIEB SAVED: 7/1/2011 8:49 AM ACADVER: 18.0S (LMS TECH) PAGESETUP: PDF 22X34 2010 VERSION DWG TO PDF.PC3 PLOTSTYLETABLE: PLTCONT.CTB PLOTTED: 7/1/2011 3:48 PM BY:
HUNT, AARON
XREFS: 09961X00-AAHPE 09961X00 XTIEBCKMAST
IMAGES:
PROJECTNAME: -

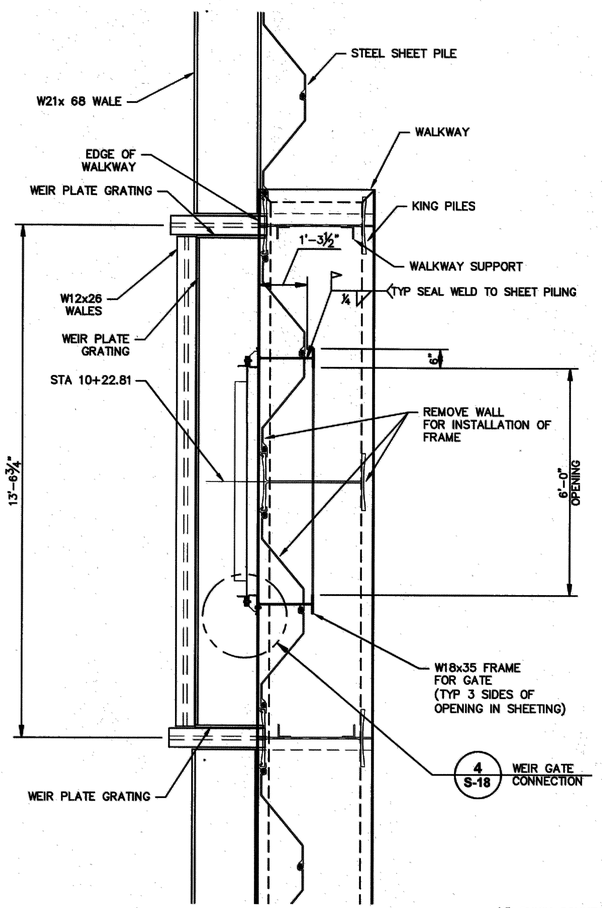


## WEIR GATE PLAN 1

SCALE: ½"=1'-0"

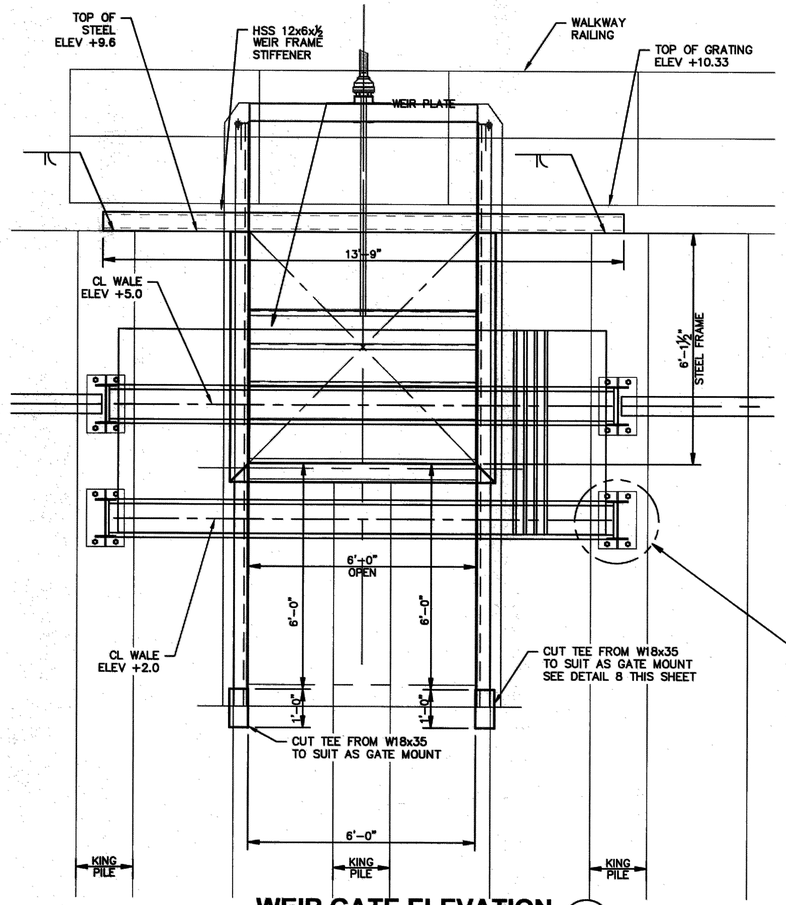


## WEIR GATE ELEVATION 2

1/2"=1'-0"

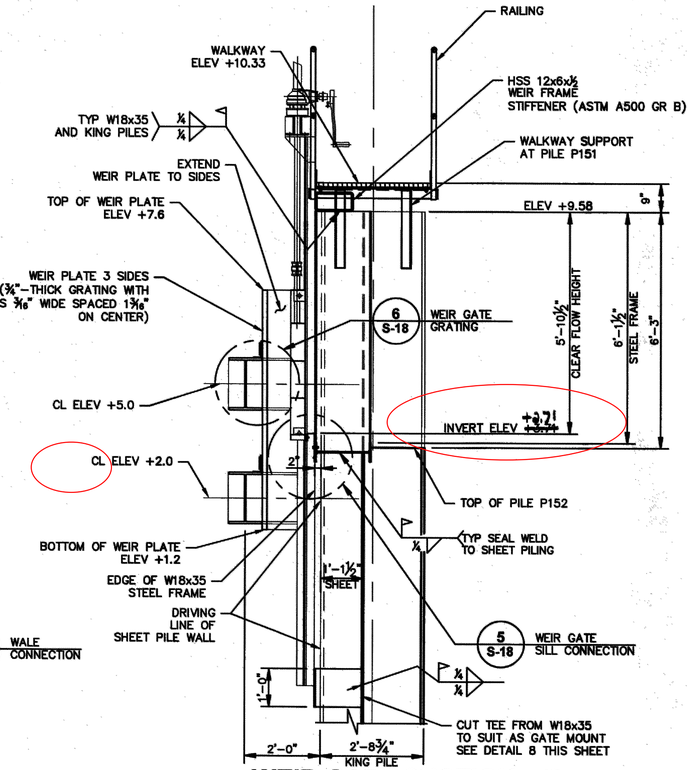


## WEIR GATE SECTION 3

SCALE: ½"=1'-0"

7 S-18 WALE CONNECTION

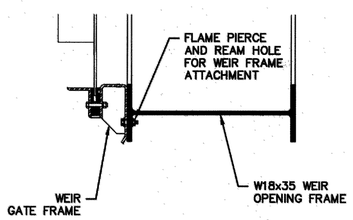


## WEIR GATE SIDE CONNECTION 4

SCALE: 1 ½"=1'-0"

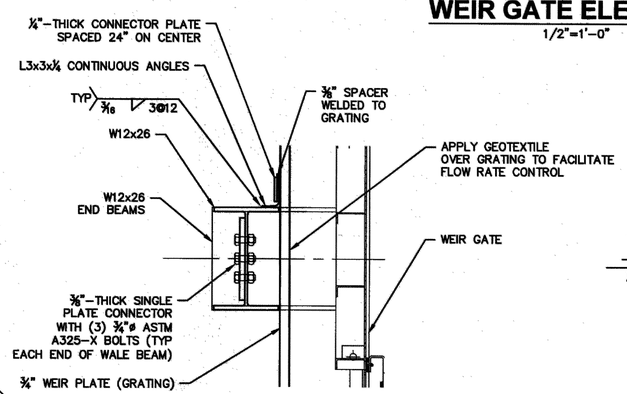


## WEIR GATE GRATING MOUNT 6

SCALE: 1"=1'-0"

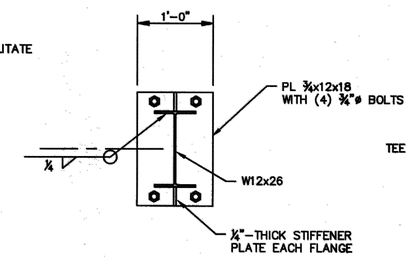


## CONNECTION DETAIL 7

SCALE: 1"=1'-0"

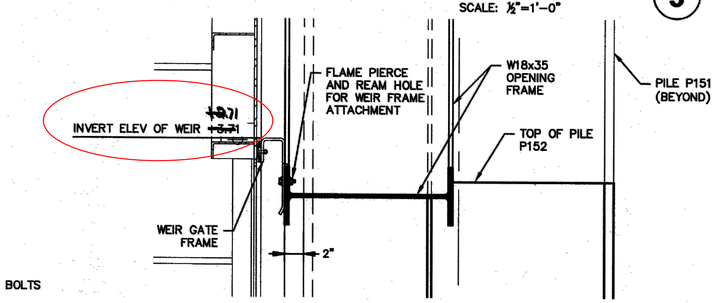


## WEIR GATE SILL CONNECTION 5

SCALE: 1 ½"=1'-0"

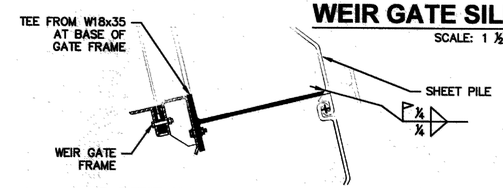


## GATE FRAME STEEL 8

SCALE: 1 ½"=1'-0"

CITY: TOLEDO-OH DIV/GROUP: DB:A. HUNT LD: PIC:R. ROMAGNOLI PM:R. ROMAGNOLI TM:R. ROMAGNOLI LYR: ON=*;OFF=*REF
\\OH03FP01\Data\Project\B0009961.0000\Drawing\S-18 WEIR GATE.dwg LAYOUT: DETS SAVED: 6/30/2011 12:46 PM ACADVER: 18.0S (LMS TECH) PAGESETUP: PDF 22X34 2010 VERSION DWG TO PDF.PC3 PLOTSTYLETABLE: PLTCONT.CTB PLOTTED: 7/1/2011 3:49 PM BY: HUNT, AARON

XREFS: IMAGES: PROJECTNAME: -
0969100-AAHPE
0969100
walkwayPlan
sheetpile
XBASEPILEELEV
XWEIRGATE
xwalksec
XWEIRPLAN
XWEIRSEC

THIS BAR REPRESENTS ONE INCH ON THE ORIGINAL DRAWING: USE TO VERIFY FIGURE REPRODUCTION SCALE

| No. | Date | Revisions | By | Ckd |
|---|---|---|---|---|

THIS DRAWING IS THE PROPERTY OF THE ARCADIS ENTITY IDENTIFIED IN THE TITLE BLOCK AND MAY NOT BE REPRODUCED OR ALTERED IN WHOLE OR IN PART WITHOUT THE EXPRESS WRITTEN PERMISSION OF SAME.

Professional Engineer's Name: AARON A HUNT
Professional Engineer's No.: 24GE04804300

| State | Date Signed | Project Mgr. |
|---|---|---|
| NJ | | RAR |
| Designed by AAH | Drawn by AAH | Checked by RAK |

ARCADIS

ARCADIS U.S., INC.
NEW JERSEY ENGINEERING CERTIFICATE OF AUTHORIZATION NUMBER 24GA27939600

TIERRA SOLUTIONS, INC. • LOWER PASSAIC RIVER, NEWARK, NJ
PHASE I CERCLA NON-TIME-CRITICAL REMOVAL ACTION

# WEIR GATE FRAMING

STRUCTURAL

ARCADIS Project No. B0009964.0001
Date JULY 2011

ARCADIS
6723 TOWPATH ROAD
BOX 66
SYRACUSE, NY 13214
TEL: 315.446.9120

S-18

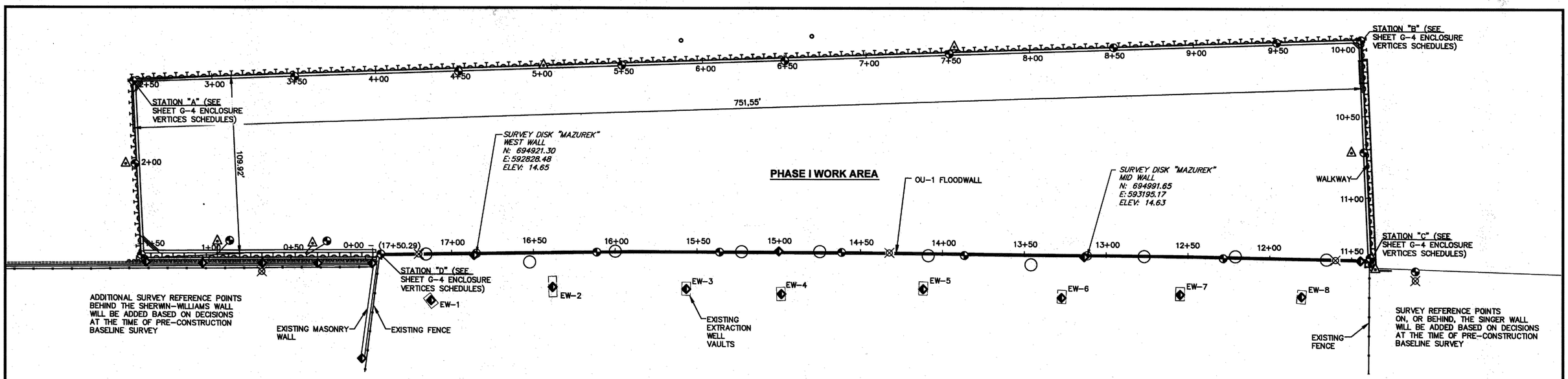


## PLAN

SCALE: 1"=30'

**SPECIAL INSTRUMENTATION SCHEDULE**

| INSTRUMENT | WALL | PLACEMENT | INSTALLATION |
|---|---|---|---|
| ADDITIONAL REFERENCE SURVEY POINTS (INSTALL BEFORE TIEBACKS) | OU-1 (CONC CURB WALL) | STA. 11+45, 13+12, 15+00, 16+82 | TO BE INSTALLED ON TOP OF THE TEMPORARY ENCLOSURE WALLS AS WELL AS THE OU-1, SINGER REALTY, AND SHERWIN-WILLIAMS FLOODWALLS. SEE SPECIFICATIONS 13 50 00 FOR FURTHER INSTRUCTION. |
| | EXTRACTION WELL VAULTS | ONE LOCATION AT EACH WELL VAULT | |
| | OU-1 MASONRY WALL (SHERWIN-WILLIAMS SIDE) | ONE LOCATION SOUTH END OF WALL | |
| | SHERWIN-WILLIAMS (STEEL WALL) | STA. 0+03, 0+35, 0+70, 1+04, 1+42 | |
| OPTICAL SURVEY POINTS | OU-1 (CONC CURB WALL) | STA. 11+45, 12+28, 13+12, 13+87, 14+62, 15+37, 16+12, 17+43 | |
| | SINGER REALTY TIMBER BULKHEAD | 30' EAST OF WESTERN SINGER REALTY PROPERTY LINE | |
| | ENCLOSURE AT SHERWIN-WILLIAMS | STA. 0+40, 0+95, 1+42 (COR) | |
| | ENCLOSURE WEST WALL | STA. 1+96, 2+51 (COR) | |
| | ENCLOSURE NORTH WALL | STA. 3+50, 4+50, 5+50, 6+50, 7+50, 8+50, 9+50, 10+02 (COR) | |
| | ENCLOSURE EAST WALL | STA. 10+69, 11+36 (COR) | |
| LOAD CELLS | OU-1 | TIEBACK / STATION / LOAD CELL | LOAD CELLS SHALL BE INSTALLED AT THE TIME OF TIEBACK INSTALLATION. THE TIEBACK INSTALLATION SUBCONTRACTOR SHALL INSTALL THE LOAD CELLS AT THE HEAD OF EACH TIEBACK BEFORE TENSIONING OPERATIONS BEGIN. SEE SPECIFICATION 13 50 00 FOR MORE INFORMATION. |
| | | T -2 / 11+70.69 / 1 | |
| | | T -6 / 12+27.19 / 2 | |
| | | T -10 / 12+84.50 / 3 | |
| | | T -14 / 13+41.82 / 4 | |
| | | T -18 / 14+4.14 / 5 | |
| | | T -22 / 14+69.57 / 6 | |
| | | T -26 / 15+34.87 / 7 | |
| | | T -30 / 16+00.52 / 8 | |
| | | T -34 / 16+66.67 / 9 | |
| | | T -38 / 17+29.86 / 10 | |
| INCLINOMETERS | SINGER REALTY | PLACE ON SUPPORT PILE | INCLINOMETER TUBE CASING SHALL BE AS SPECIFIED IN SPECIFICATION 13 50 00 AND INSTALLATION AS SHOWN IN DETAIL 1 (AT RIGHT). |
| | WEST ENCLOSURE | STA. 1+96 | |
| | SHERWIN-WILLIAMS ENCLOSURE | STA. 0+40, 0+95 (ON WALL, NOT LAND) | |
| | NORTH ENCLOSURE | STA. 5+01, 7+52 | |
| | EAST ENCLOSURE | STA. 10+69 | |
| VIBRATION MONITORING | OU-1 | STA. 11+60, 14+39, 17+20 | SEISMOGRAPHS WILL BE PLACED BY THE ENGINEER AT THE VIBRATION MONITORING LOCATIONS AT THE TIME OF MONITORING. SEE SPECIFICATION 13 50 00 FOR FURTHER INSTRUCTION. |
| | SHERWIN-WILLIAMS ENCLOSURE | 71' WEST OF EASTERN SHERWIN-WILLIAMS PROPERTY LINE | |
| | SINGER REALTY | 30' EAST OF WESTERN SINGER REALTY PROPERTY LINE | |

*COR = CORNER OF ENCLOSURE

**LEGEND:**

- HZ-AZ COMBINATION WALL
- FENCE
- PROPERTY BOUNDARY
- PIERHEAD AND BULKHEAD LINE
- OPTICAL SURVEY POINT
- VIBRATION MONITOR
- INCLINOMETER
- LOAD CELL
- ADDITIONAL SURVEY REFERENCE POINT*.

*ADDITIONAL SURVEY REFERENCE POINTS TO BE INSTALLED BY SURVEYOR AND SHALL BE EXISTING OR NEW PERMANENT MARKINGS ON THE STRUCTURES THAT PERMIT THE SURVEYOR TO REPEAT MEASUREMENTS THROUGHOUT CONSTRUCTION. THESE COULD INCLUDE INSTALLED SURVEY DISKS, PK NAILS, CHISELED "X", ETC.

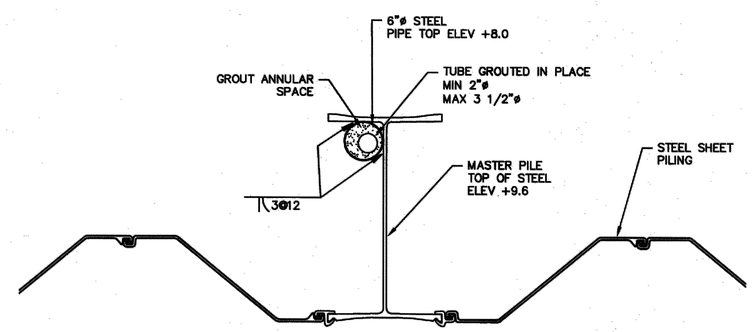


## TYPICAL INCLINOMETER INSTALLATION (1)

SCALE: 1"=1'-0"

8' 0 12' 24'

THIS BAR REPRESENTS ONE INCH ON THE ORIGINAL DRAWING: USE TO VERIFY FIGURE REPRODUCTION SCALE

| No. | Date | Revisions | By | Ckd |
|---|---|---|---|---|

THIS DRAWING IS THE PROPERTY OF THE ARCADIS ENTITY IDENTIFIED IN THE TITLE BLOCK AND MAY NOT BE REPRODUCED OR ALTERED IN WHOLE OR IN PART WITHOUT THE EXPRESS WRITTEN PERMISSION OF SAME.

Professional Engineer's Name: AARON A HUNT
Professional Engineer's No.: 24GE04804300
State: NJ | Date Signed: 7/5/2011 | Project Mgr.: RAR
Designed by: AAH | Drawn by: AAH | Checked by: RAK

ARCADIS

ARCADIS U.S., INC.
NEW JERSEY ENGINEERING CERTIFICATE OF AUTHORIZATION NUMBER 24GA27939600

TIERRA SOLUTIONS, INC. • LOWER PASSAIC RIVER, NEWARK, NJ
PHASE I CERCLA NON-TIME-CRITICAL REMOVAL ACTION

# STRUCTURE MONITORING PLAN AND DETAILS

STRUCTURAL

ARCADIS Project No. B0009964.0001
Date JULY 2011
ARCADIS 6723 TOWPATH ROAD BOX 66 SYRACUSE, NY 13214 TEL: 315.446.9120

S-19

CITY: TOLEDO-OH DIV/GROUP: DBA-HUNT LD: PIC-R. ROMAGNOLI PM-R. ROMAGNOLI TM-R. ROMAGNOLI LYR: ON=*;OFF=*REF
\\OHG3FP01\Data\Projects\B0009961.0000\Drawings\MONITORING\PLAN - STRUCTURE MONITORING PLAN AND DETAILS.dwg LATOUT: S-19 STRUCTURE MONITORING PLAN AND DETAILS SAVED: 6/30/2011 12:46 PM ACADVER: 18.0S (LMS TECH) PAGESETUP: PDF 22X34 2010 VERSION DWG TO
PDF.PC3 PLOTSTYLETABLE: PLTCONT.CTB PLOTTED: 7/1/2011 3:49 PM BY: HUNT, AARON
XREFS: 09961X00 09964X00 baseline 09961X02 sheetpile wallwayPlan monopiles mattress 09964XL1 G-2 Survey Control PlanA
IMAGES: PROJECTNAME: -

ARCADIS SUBMITTAL # CD-070-R1

*WEEKS MARINE INC.*

*WMI Job No. 2010-0148*

*REQUEST FOR INFORMATION (RFI) NO.* **019**

*CONTRACT NO. B000964.001*

Friday, August 31, 2012

*Project Name: Lower Passaic River Phase I*

*To: Arcadis U.S. Inc.*

*251 E. Ohio St., Suite 800*
*Indianapolis, IN, 46204*

*Attention: Matthew Bowman*

*From: Weeks Marine, Inc*

*4 Commerce Drive,*
*Cranford, NJ 07016*

*Attention: Claude Dion*

*Subject:* Fence Restoration at OU-1 Floodwall

*Reference:* N/A

*Description:*

The re-installation of approximately 610' linear of existing eight foot high galvanized chain link fence will be performed as follow:

-New 3" fence posts will be sleeved over the existing 2 ½" fence posts stub.
-At 2 locations a steel plate 8" x 8" will be anchored to hold the 3" fence posts.
-Tension wire will be installed at the top and the bottom, which will hold all the 3" post in place and straight.

See attached re-installation drawing.

☐ REVIEWED ☐ REVIEWED & NOTED

REVIEWED SOLELY FOR GENERAL COMPLIANCE WITH CONTRACT DOCUMENTS

ARCADIS

SIGNATURE

9/17/12 Syr

Date Office Location

☒ RESUBMIT ☐ REJECTED

*Date Reply Required:* 9/7/2012

*Owner Use Only:*

**CD-070-R1**

**RESUBMIT:**

ARCADIS requests that Weeks resubmit their proposal for the re-installation of the fence at the OU-1 Floodwall. The proposal should include galvanized bolting through both posts or approved equivalent that secures posts in vertical position and maintains the fence strength and plumbness equal or better than the original posts installed in concrete.

ARCADIS SUBMITTAL # CD-070-R1

***WEEKS MARINE INC.*** ***WMI Job No. 2010-0148***

***REQUEST FOR INFORMATION (RFI) NO.*** **019**

***CONTRACT NO. B000964.001***

Friday, August 31, 2012 ***Project Name: Lower Passaic River Phase I***

***To: Arcadis U.S. Inc.***

***251 E. Ohio St., Suite 800***
***Indianapolis, IN, 46204***

***Attention: Matthew Bowman***

***From: Weeks Marine, Inc***

***4 Commerce Drive,***
***Cranford, NJ 07016***

***Attention: Claude Dion***

***Subject:*** Fence Restoration at OU-1 Floodwall

***Reference:*** N/A

***Description:***

The re-installation of approximately 610' linear of existing eight foot high galvanized chain link fence will be performed as follow:

-New 3" fence posts will be sleeved over the existing 2 ½" fence posts stub.
-At 2 locations a steel plate 8" x 8" will be anchored to hold the 3" fence posts.
-Tension wire will be installed at the top and the bottom, which will hold all the 3" post in place and straight.

See attached re-installation drawing.

***Date Reply Required:*** 9/7/2012

***Owner Use Only:***

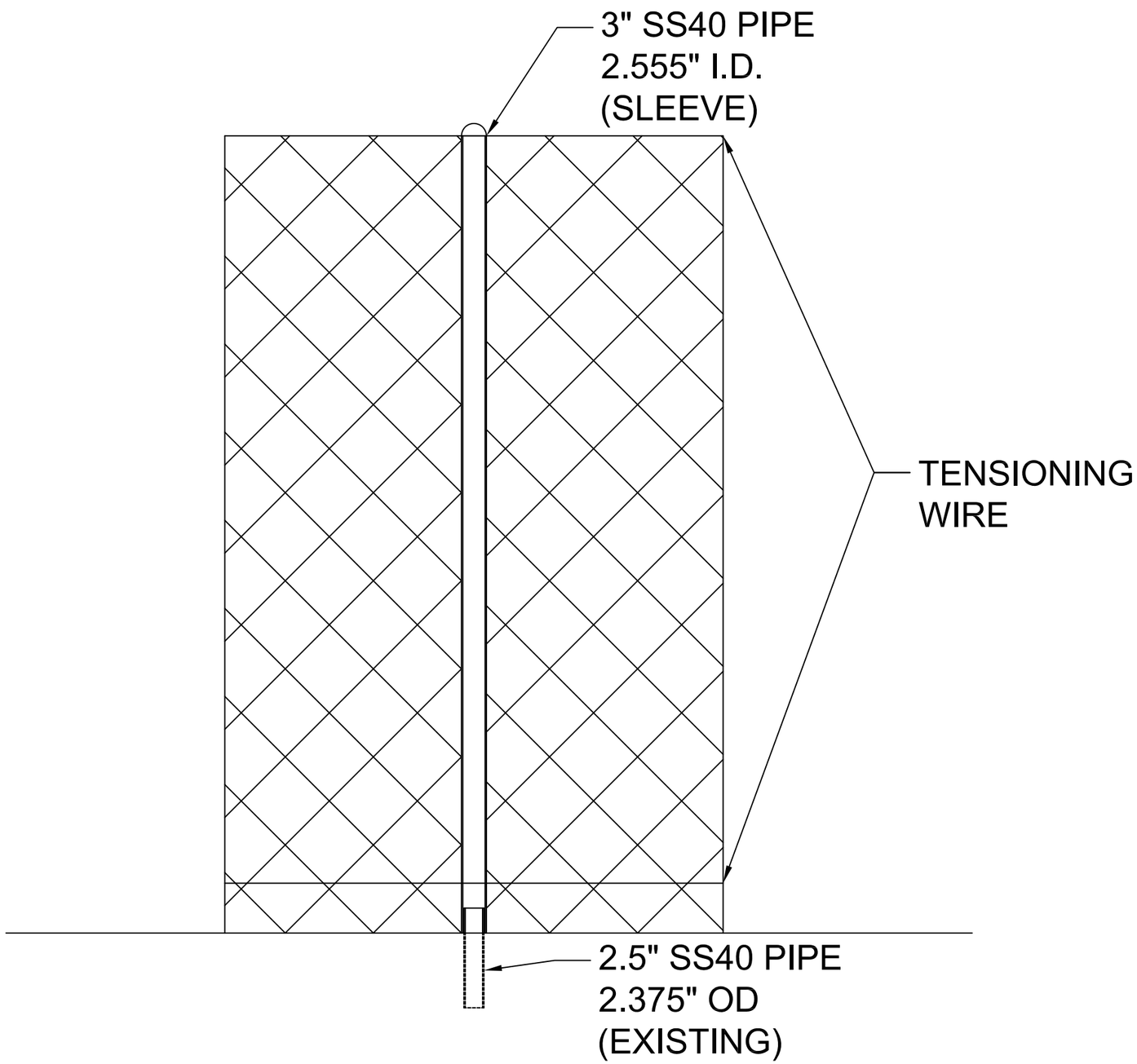


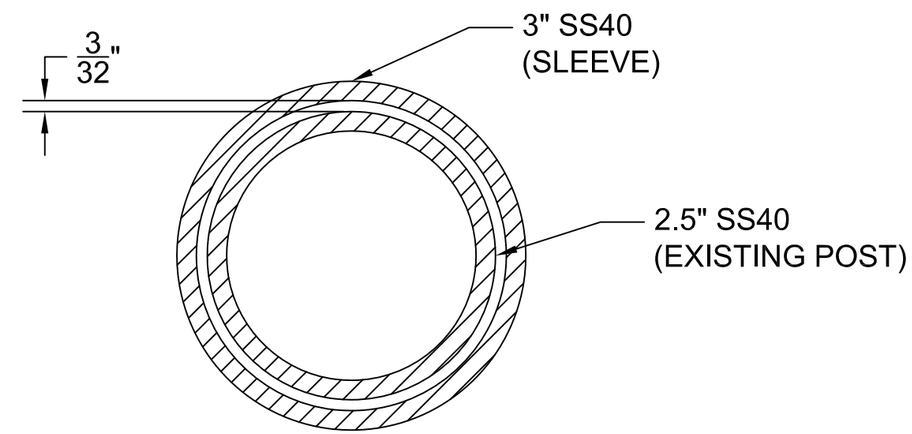


| DWG. No. | REFERENCE DRAWINGS |
|---|---|

WEEKS MARINE, INC.
(908) 272-4010

LOWER PASSAIC
FENCE RESTORATION

| | | |
|---|---|---|
| DRAWN BY: TGI | SCALE: | DWG. SIZE FORMAT: 11x17 |
| CHECKED BY: | DATE: 08/31/12 | |
| APPROVED BY: | SHEET 1 OF 2 | REF: |
| DWG. NO. | | |

| REV. # | DATE | REVISION | BY |
|---|---|---|---|
| | | | |
| | | | |

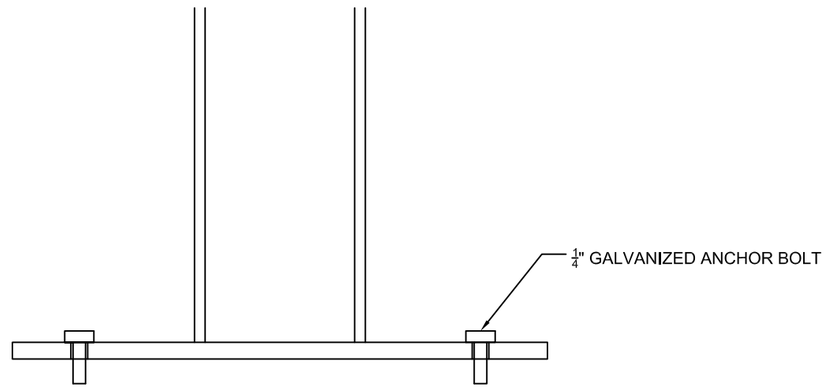


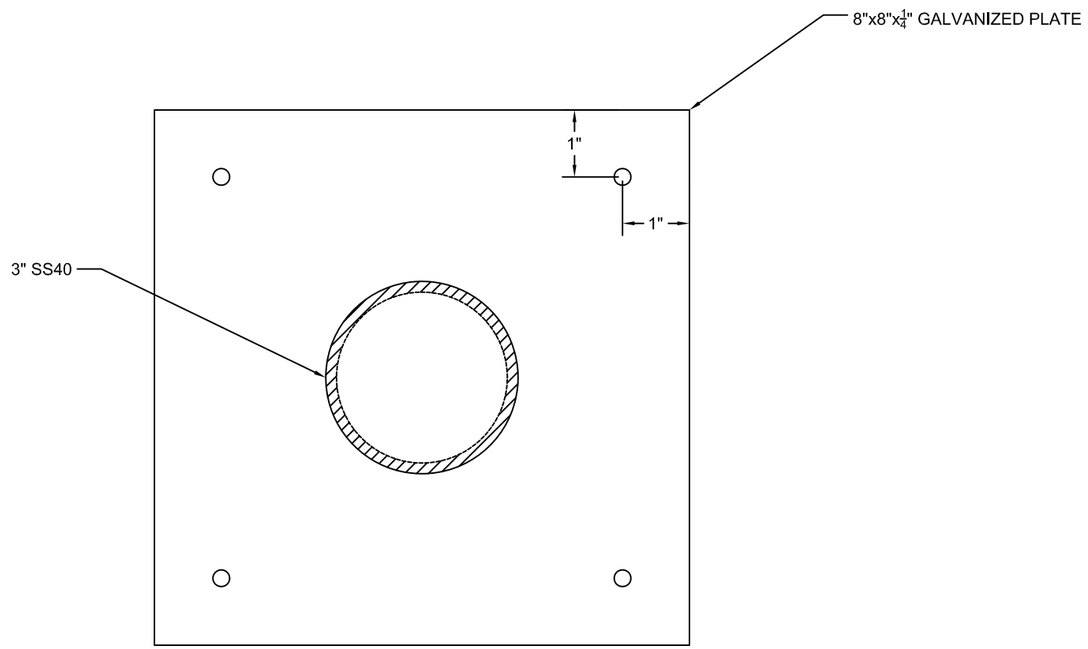


| DWG. No. | REFERENCE DRAWINGS |
|---|---|

WEEKS MARINE, INC.
(908) 272-4010

LOWER PASSAIC
FENCE RESTORATION

| | | |
|---|---|---|
| DRAWN BY: TGI | SCALE: | DWG. SIZE FORMAT: 11x17 |
| CHECKED BY: | DATE: 08/31/12 | |
| APPROVED BY: | SHEET 2 OF 2 | REF: |
| DWG. NO. | | |

| REV. # | DATE | REVISION | BY |
|---|---|---|---|
| | | | |
| | | | |

*WEEKS MARINE INC.*

*WMI Job No. 2010-0148*

ARCADIS SUBMITTAL # CD-070-R2

*REQUEST FOR INFORMATION (RFI) NO.* **019-R1**

*CONTRACT NO. B000964.001*

Tuesday, September 18, 2012

*Project Name: Lower Passaic River Phase I*

*To: Arcadis U.S. Inc.*

*251 E. Ohio St., Suite 800*
*Indianapolis, IN, 46204*

*Attention: Matthew Bowman*

*From: Weeks Marine, Inc*

*4 Commerce Drive,*
*Cranford, NJ 07016*

*Attention: Claude Dion*

*Subject:* Fence Restoration at OU-1 Floodwall

*Reference:* N/A

*Description:*

The post will be fastened to the existing post, set in the concrete, using a 3/8" set screw as shown in the attached drawing the lateral position will be secured by the fence itself.

[X] REVIEWED [ ] REVIEWED & NOTED

REVIEWED SOLELY FOR GENERAL COMPLIANCE WITH CONTRACT DOCUMENTS

ARCADIS

SIGNATURE

9/18/2012 SYR

Date Office Location

[ ] RESUBMIT [ ] REJECTED

*Date Reply Required:* 9/21/2012

*Owner Use Only:*

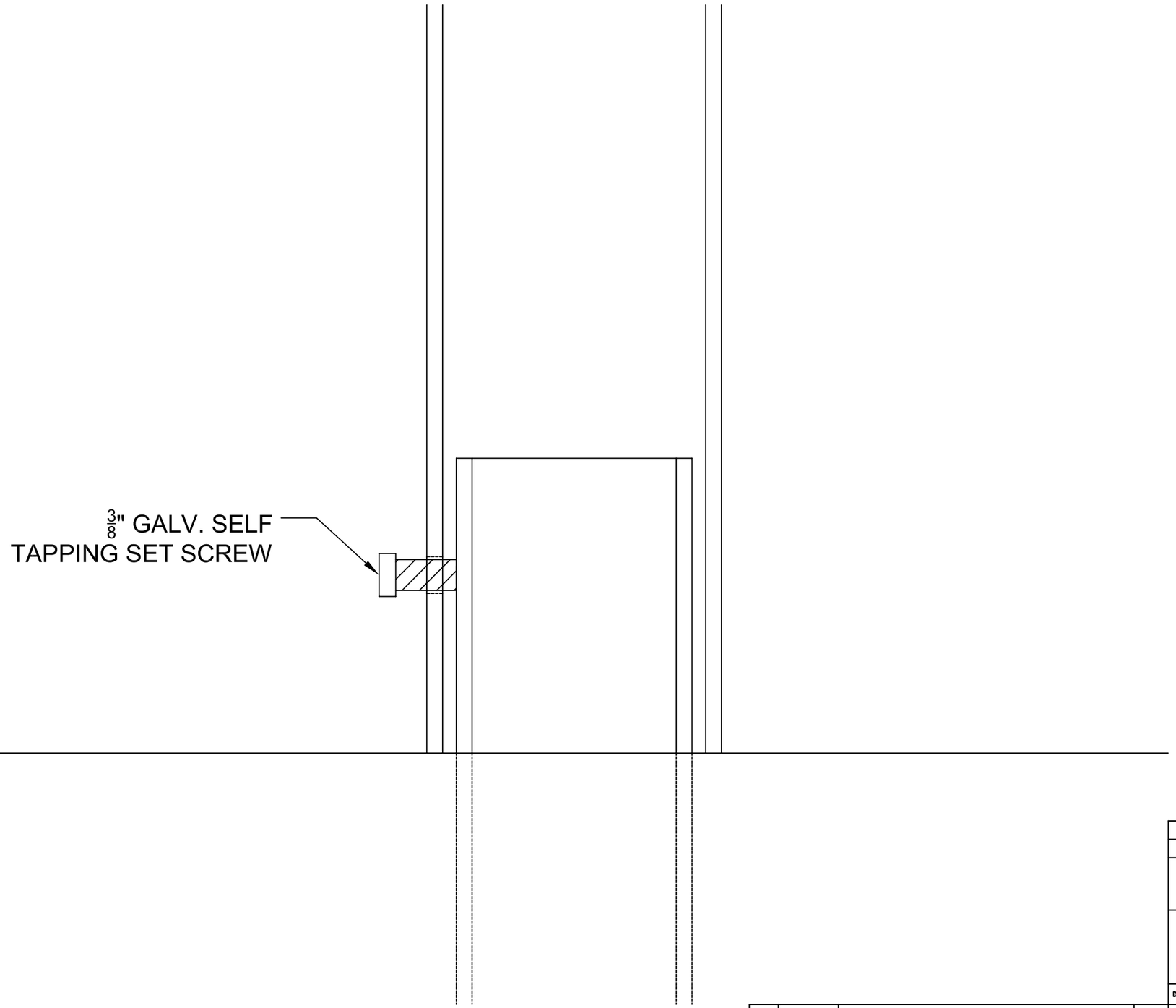


| | | | |
|---|---|---|---|
| | | | |
| | | | |
| REV. # | DATE | REVISION | BY |

| | |
|---|---|
| DWG. No. | REFERENCE DRAWINGS |

WEEKS MARINE, INC.
(908) 272-4010

LOWER PASSAIC
FENCE RESTORATION

| | | |
|---|---|---|
| DRAWN BY: TGI | SCALE: | DWG. SIZE FORMAT: 11x17 |
| CHECKED BY: | DATE: 09/18/12 | |
| APPROVED BY: | SHEET 1 OF 1 | REF: |
| DWG. NO. | | |

**ARCADIS SUBMITTAL # CD-FIO-002**

**From:** Dijk, B.M.J. van (Dolman) [mailto:b.m.j.vandijk@boskalis.nl]
**Sent:** Thursday, August 11, 2011 12:54 PM
**To:** King, Coleman; Hiemstra, L. (Dolman)
**Cc:** Geevers, N. (Dolman); Bowman, Matthew; Pelenski, Michael; Evans, Allen
**Subject:** RE: electric, cross section of pipe rack, general layout dwgs, canopys

Coleman,

See attachments for support design and cable tray pictures and the PDF for site layout. The Cyan colored lines will be the cable tray.

Next week I will be on site.

Regards,
Bram

ARCADIS SUBMITTAL # CD-FIO-02

# WTP

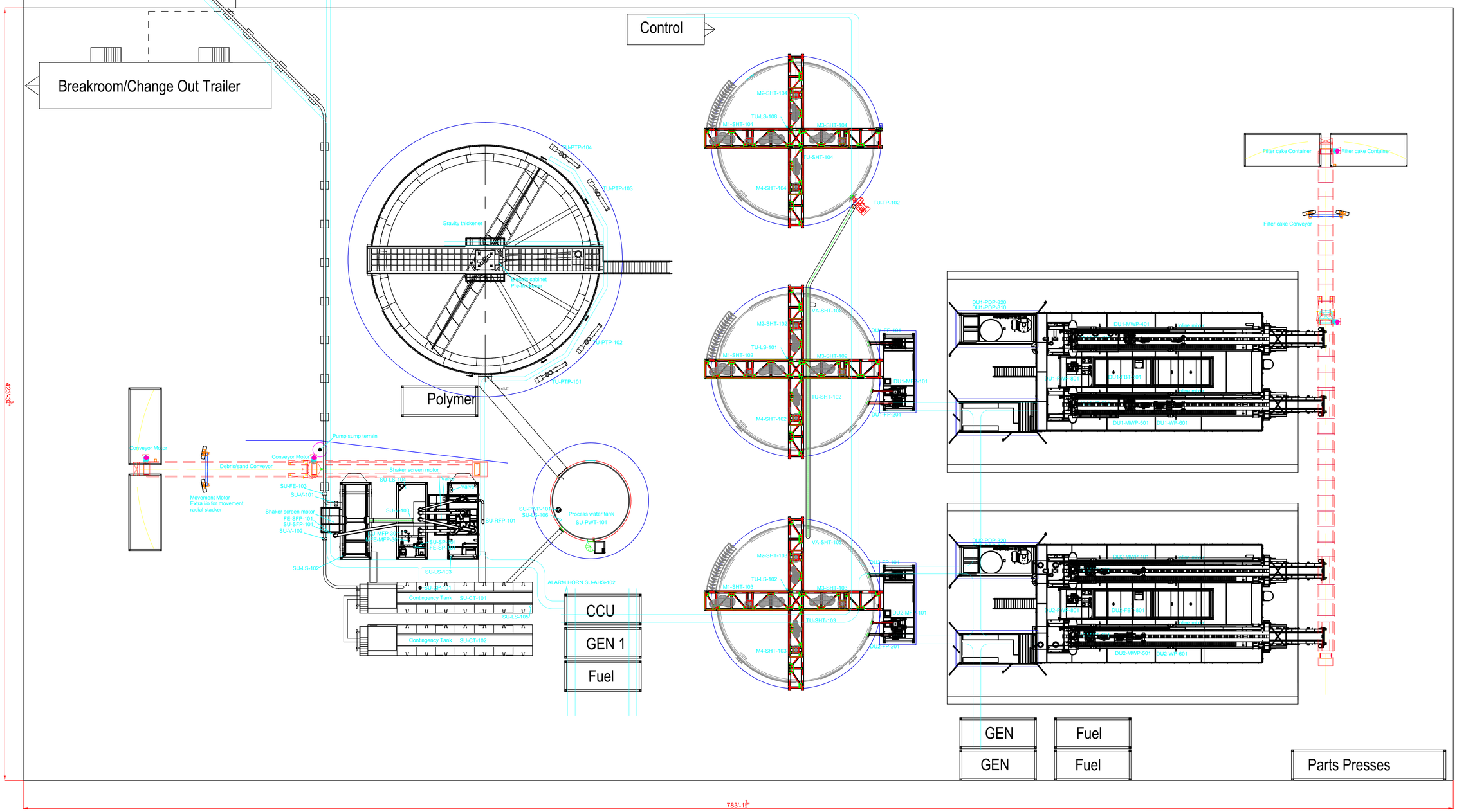


DRAFT

| Rev. | Date | Prepared | Checked | Approved | Remarks |
|---|---|---|---|---|---|
| I | 20110729 | JBEM | . | . | Cable tray changes |
| H | 20110728 | JBEM | . | . | Checked Phoenix tanks |
| G | . | . | . | . | . |
| F | . | . | . | . | |
| K | 20110810 | JBEM | . | . | ADDED TAG NR's |
| J | 3-08-2011 | JBEM | . | . | Moved CCU Container |

Client:

LOWER PASSAIC RIVER, NEWARK NJ

PHASE 1 CERCLA NON-TIME-CRITICAL

REMOVAL ACTION

LAYOUT SEPERATION AND

DEWATING UNIT


Design:

Boskalis Dolman bv

Rosmolenweg 20
P.O. Box 76
3350 AB Papendrecht
The Netherlands
Tel: +31 (0)78 69 69 900
Fax: +31 (0)78 69 69 901

Email: dolman@boskalis.nl
Internet: www.boskalisdolman.com


| | | | |
|---|---|---|---|
| Drawn: MDIJ | | Size: A1 (841x594mm) | |
| Checked: BKD | | Project number: P0769 | |
| Date: 15-04-2011 | | Drawing number: P0769-00-001 | Rev: K |
| Scale: 1:200 | | | |

P0769-00-001K.DWG

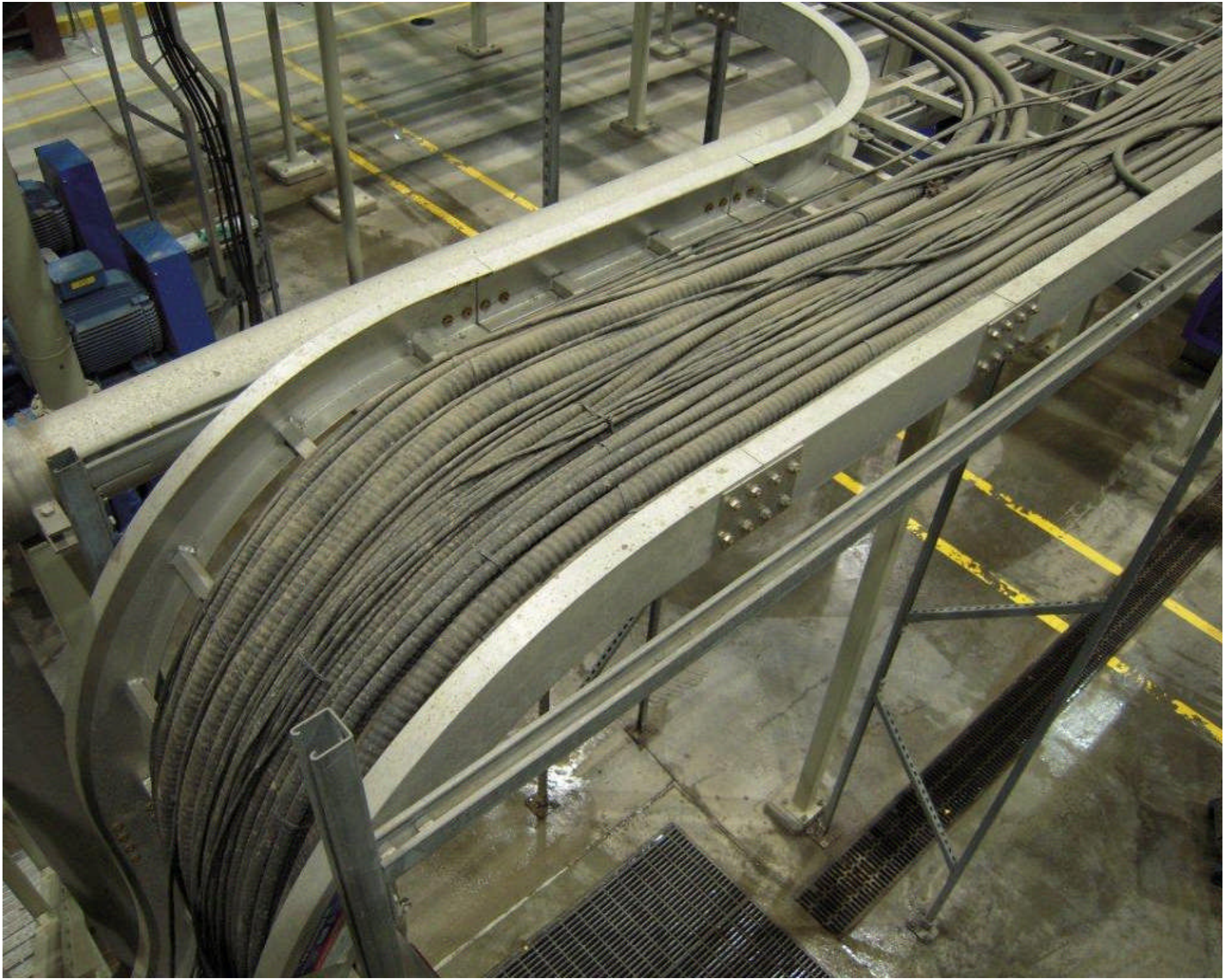

ARCADIS SUBMITTAL # CD-FIO-003

CleanHarbors
ENVIRONMENTAL SERVICES®

42 Longwater Drive, Norwell, MA 02061
(781) 385-9813
Lis.Justin@cleanharbors.com
www.cleanharbors.com

# Project Submittal

**Project Name:** Lower Passaic River Phase I Sediment Removal Action

September 13, 2011

**Engineer:** Rob Romagnoli, (QCA) Engineer of Record (ARCADIS) **Address:** 6723 Towpath Road, Syracuse, NY 13214

**Sub-Contractor:** **Address:**

**Manufacturer:** **Address:**

**Supplier:** **Address:**

**Submittal: FIO-004-R1** **Specification/Drawing Reference:**

| Transmittal Record | Attention | Sent | Received | Due | Quantity | Received |
|---|---|---|---|---|---|---|
| Contractor to Engineer | Rob Romagnoli (QCA)<br>Scott Murphy (TM) | 9/13/2011 | | N/A | 1 | |
| Engineer to Contractor | Justin Lis | | | | | |

**Review Action Code:** 1. Reviewed/No exception taken 2. Make corrections noted 3. Revise as noted and resubmit 4. Incomplete submittal, resubmit 5. Rejected. Resubmit as specified

| 1 | 2 | 3 | 4 | 5 | Drawing/Item | Dated | Description |
|---|---|---|---|---|---|---|---|
| | | | | | 1 | 9/13/11 | Clean Harbors Construction Schedule (rev20110909) For Arcadis – Lower Passaic River Phase I Project. |
| | | | | | | | |
| | | | | | | | |
| | | | | | | | |
| | | | | | | | |
| | | | | | | | |
| | | | | | | | |
| | | | | | | | |
| | | | | | | | |
| | | | | | | | |

**COMMENTS:**

Clean Harbors submits our Construction Schedule for the Arcadis – Lower Passaic River Phase I Project for information purposes only.

Authorized Reviewer: SPM CHES Date: 9-13-11

Notations do not authorize changes to contract sum or time. If you are authorized to proceed with the work identified in this submittal, it is assumed that no change in the contract amount or completion date is required. If a change in the work affecting your contract amount or completion is involved, notify the CM immediately.

*"People and Technology Protecting and Restoring America's Environment"*

**Clean Harbors Fall 2011 Construction Schedule**
**ARCADIS Lower Passaic River, Newark, NJ**
Fri 9/9/11

| ID | Task Name | Duration | Start | Finish |
|---|---|---|---|---|
| 1 | **Arcadis - Lower Passaic River Phase 1- Fall 2011** | **95 days** | **Mon 8/1/11** | **Fri 12/9/11** |
| 2 | Project Award | 1 day | Mon 8/1/11 | Mon 8/1/11 |
| 3 | Preconstruction Meeting | 1 day | Thu 8/25/11 | Thu 8/25/11 |
| 4 | Preconstruction Meeting 2 | 1 day | Thu 9/22/11 | Thu 9/22/11 |
| 5 | **Progress Meeting** | **61 days** | **Thu 9/8/11** | **Thu 12/1/11** |
| 19 | **Preliminary Submittals** | **30 days** | **Mon 8/29/11** | **Fri 10/7/11** |
| 20 | Equipment and Material Submittals | 30 days | Mon 8/29/11 | Fri 10/7/11 |
| 21 | Bonds Insurance | 30 days | Mon 8/29/11 | Fri 10/7/11 |
| 22 | HASP | 30 days | Mon 8/29/11 | Fri 10/7/11 |
| 23 | Insurance of Purchase Orders To Vendors | 30 days | Mon 8/29/11 | Fri 10/7/11 |
| 24 | Post Award Site Survey | 30 days | Mon 8/29/11 | Fri 10/7/11 |
| 25 | Submit Startup/Testing Plan and Schedule | 30 days | Mon 8/29/11 | Fri 10/7/11 |
| 26 | **Site Mobilization and Construction** | **45 days** | **Mon 10/10/11** | **Fri 12/9/11** |
| 27 | Mobilization | 5 days | Mon 10/17/11 | Fri 10/21/11 |
| 28 | Demobilization | 5 days | Mon 12/5/11 | Fri 12/9/11 |
| 29 | PLS Training | 4 days | Mon 10/17/11 | Thu 10/20/11 |
| 30 | Define Staging Area for Materials/Equipment Layout | 4 days | Mon 10/17/11 | Thu 10/20/11 |
| 31 | Mobilize and Place Office Trailer | 4 days | Mon 10/17/11 | Thu 10/20/11 |
| 32 | Mobilize and Place Sanitary and H&S Facilities | 4 days | Mon 10/17/11 | Thu 10/20/11 |
| 33 | Mobilize and Place Generator and Light Plants | 4 days | Mon 10/17/11 | Thu 10/20/11 |
| 34 | Mobilize and Place EQ Tanks On West End | 2 days | Fri 10/21/11 | Mon 10/24/11 |
| 35 | Mobilize and Place Carbon Vessels | 5 days | Mon 10/24/11 | Fri 10/28/11 |
| 36 | Install Piping (EQ Tanks & Carbon) | 5 days | Mon 10/24/11 | Fri 10/28/11 |
| 37 | Install Conduit and Wiring (EQ Tanks & Carbon) | 8 days | Tue 10/25/11 | Thu 11/3/11 |
| 38 | Pressure Test Installed Piping | 1 day | Mon 10/31/11 | Mon 10/31/11 |
| 39 | Construction of Pump/Electrical/AC Buildings (Offsite) | 19 days | Mon 10/10/11 | Thu 11/3/11 |
| 40 | Mobilize and Place Treatment Trailers | 3 days | Mon 10/31/11 | Wed 11/2/11 |
| 41 | Mobilize and Place Holding Tanks on East Side | 3 days | Tue 11/1/11 | Thu 11/3/11 |
| 42 | Install Piping (Treatment Trailers and Holding Tanks) | 5 days | Tue 11/1/11 | Mon 11/7/11 |
| 43 | Install Conduit and Wiring (Trailers and Holding Tanks) | 6 days | Fri 11/4/11 | Fri 11/11/11 |
| 44 | Pressure Test Installed Piping | 1 day | Tue 11/8/11 | Tue 11/8/11 |
| 45 | Mobilize and Place Electrical/Pump/AC Houses | 3 days | Fri 11/4/11 | Tue 11/8/11 |
| 46 | Mobilize and Place Solids and Surge Tanks and Bag Filters | 3 days | Fri 11/4/11 | Tue 11/8/11 |
| 47 | Install Piping (Pump House, Solids and Surge Tanks and Bag Filter) | 5 days | Wed 11/9/11 | Tue 11/15/11 |
| 48 | Install Conduit and Wiring (Pump/Electrical/AC/Solids/Surge/ Bag Filter) | 11 days | Mon 11/14/11 | Mon 11/28/11 |
| 49 | Pressure Test Installed Piping | 1 day | Wed 11/16/11 | Wed 11/16/11 |
| 50 | Install Discharge Line | 5 days | Thu 11/17/11 | Wed 11/23/11 |
| 51 | System Testing | 10 days | Mon 11/21/11 | Fri 12/2/11 |
| 52 | Winterization | 4 days | Mon 12/5/11 | Thu 12/8/11 |

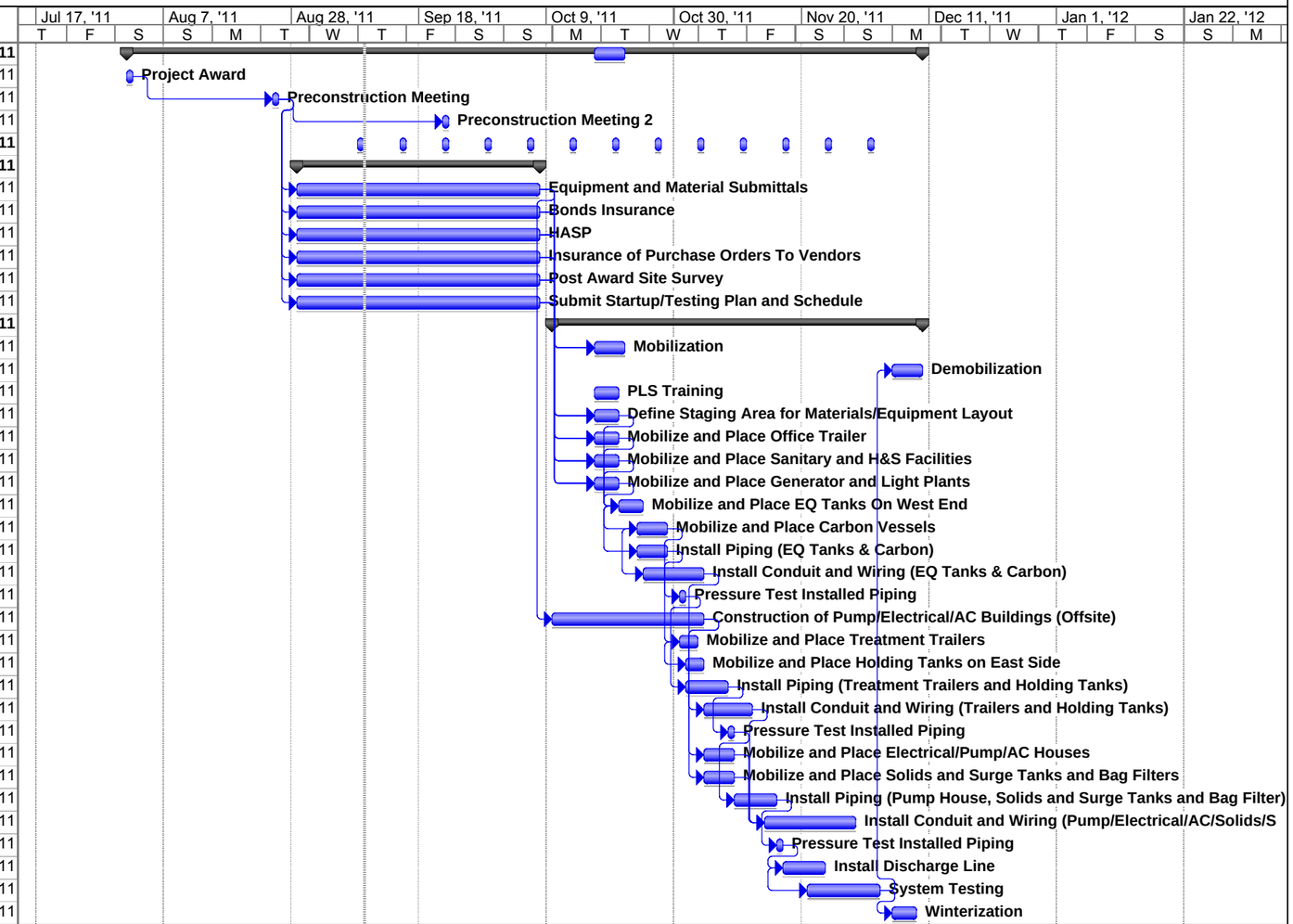


Project: Arcadis - Lower Passaic River
Date: Fri 9/9/11

| | | | | | | | | | | | |
|---|---|---|---|---|---|---|---|---|---|---|---|
| Task | | Milestone | | Rolled Up Task | | Rolled Up Progress | | External Tasks | | Group By Summary | |
| Progress | | Summary | | Rolled Up Milestone | | Split | | Project Summary | | Deadline | |

# Lifting Plan

## *Passaic River Cleanup*

*Construction Phase – Filter Press installation*

## *840-10111*

**CLIENT NAME** : **ARCADIS-US**
**PROJECT LOCATION** : **Newark, New Jersey, USA**

**PROJECT NUMBER** : **840-10111**
**PROJECT MANAGER** : **Bart Hiemstra**

**Controlled Copy no. ....**

| **Controlled Copy Distribution list** | | | |
|---|---|---|---|
| No. | Company | Function | Name |
| 01 | Client | Client's Authorized Representative | Matthew Bowman |
| 02 | Engineer | Client's Site Engineer | Coleman King |
| 03 | SECI | Project Manager | Bart Hiemstra |
| 04 | SECI | Technical Plant Manager | Bram van Dijk |
| 05 | Amquip | Crane Company Representative | Greg Hannold |
| 06 | Shelby | Rigging Company Representative | |

| **Revision Status** | | | | | |
|---|---|---|---|---|---|
| Rev | Issue Date | Reason for Issue | Prepared | Checked | Approved |
| 0.0 | | | | | |
| 1.0 | | | | | |
| 2.0 | | | | | |
| **List of Changes to previous version** | | | | | |
| Par. | Change | | | | |
| | | | | | |
| | | | | | |
| | | | | | |

**Attachments:**

1. **ARCADIS – Tierra Lift Plan**
2. **Overview drawing with crane positions**
3. **3D Lift Plans**
4. **Outrigger pad loads**
5. **Crane specs: Grove GMK6250**
6. **Lifting instructions presses and support structure**

7.

| | | | | |
|---|---|---|---|---|
| 1. | **Date: 03/October/2011** | **Site: Passaic River** | **Location: Newark, NJ** | |
| 2. | **Crane / Lifting Device Type** | | Crawler | |
| | Plant / Registration No. | | Lifting Capacity | **250T** |
| | Boom Length **106.5'** | Max. Boom Angle **65deg** | Max. Radius | **360deg** |
| | Size of Outrigger Pads **4'wx20'lx1fh** | | Max. Distance edge of Groyne | |
| | Maximum Weight allowed by Chart **123,000lbs** | | Others | |
| 3. | **Lift details** | | | |
| | Load (Known / Estimated) | **110,000lbs** | Ground: **asphalt** | |
| | Tag Lines Required | **Y**/N | Expected Wind speed | |
| 4. | **Personnel** | | | |
| | Lift Supervisor | | Name | |
| | Crane Operator | | Name | |
| | Banksman | | Name | |
| | Rigger | | Name | |
| | **Emergency Coordinator Phone** | | **Number** | |
| 5. | **Risk Assessment** | | **Action to Avoid or Reduce Risk** | |
| | Rigging failure | | Competent inspection / certified equipment | |
| | Crane failure | | Competent inspection / certified equipment | |
| | Injury to operating personnel | | Use of required PPE | |
| | Injury to others | | Banksmen to keep operating area clear | |
| | Human error | | Employment of competent and licensed personnel | |
| | High winds / swell | | Lift to be postponed until conditions are suitable | |
| | Underground services / Excavations | | Make sure all underground services are mapped | |
| | Overhead power lines | | None | |
| | Unstable / Soft ground | | None | |
| | Hazardous chemicals/materials | | None | |
| | Restricted access – width or height | | Trailer to back up to crane position | |
| | Others | | | |
| 6. | **Inspection** | | **Name of Inspector:** | |
| | Crane / Lifting Device Inspected | Y/N | Crane / Lifting Device Certificate ok? | Y/N |
| | Crane / Lifting Device Operator certified | Y/N | Operators Certificate Sighted? | Y/N |
| | Lifting Gear Inspected | Y/N | Colour Code on Gear ok? | Y/N |
| 7. | **Communication** | | | |
| | Crew Briefing Held | Y/N | Means of Communication: | Radio / Hand Signals |
| 6. | **Name of person** | **Signature** | **Name of person** | **Signature** |
| | | | | |
| | | | | |

| 6. | Name of person | Signature | Name of person | Signature |
|---|---|---|---|---|
| | | | | |
| | | | | |
| | | | | |
| | | | | |
| | | | | |
| | | | | |
| | | | | |
| | | | | |
| | | | | |
| | | | | |
| | | | | |
| | | | | |
| | | | | |
| | | | | |
| | | | | |
| | | | | |
| | | | | |

**Drawing shown Plan View and Surrounding Work**

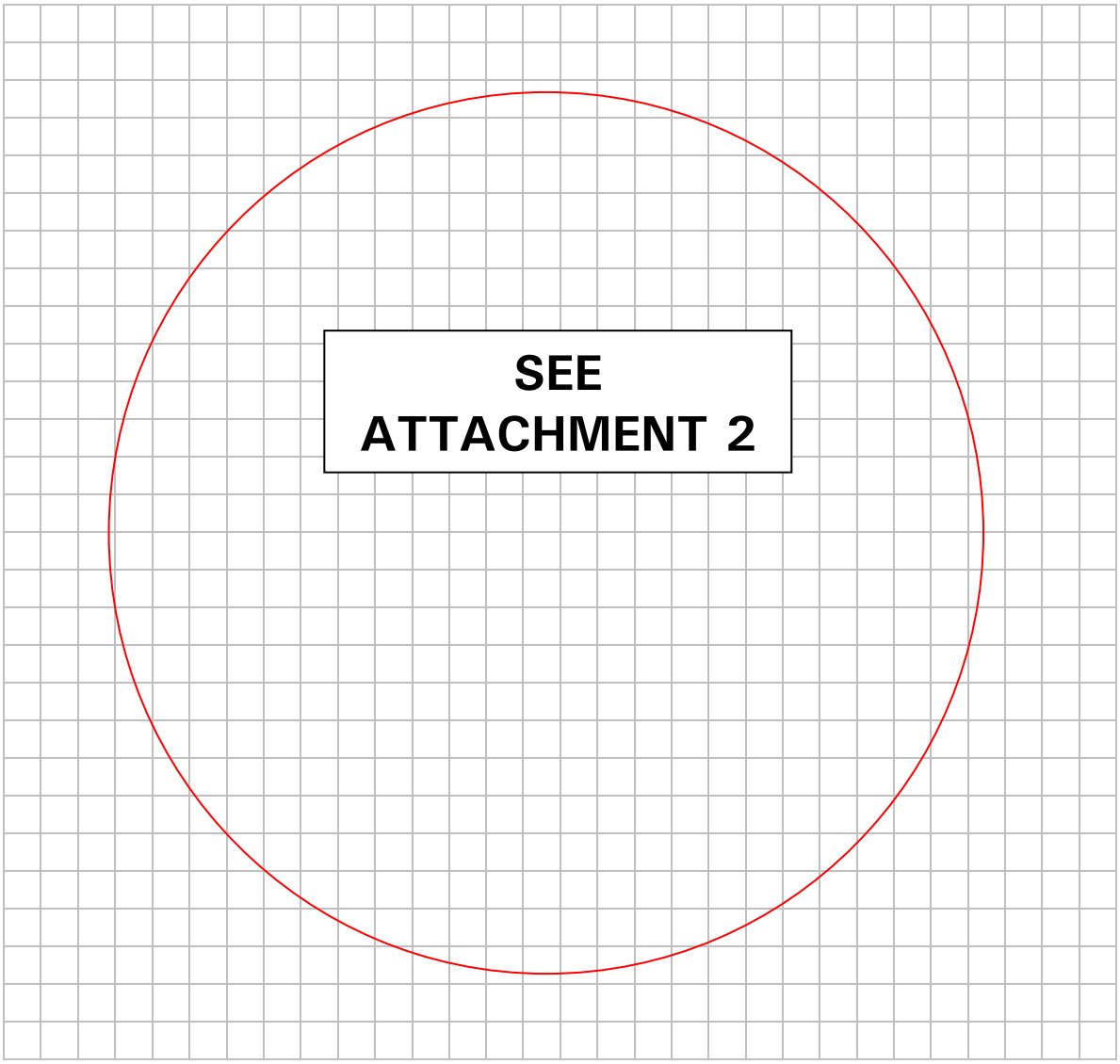


**I have inspected the lifting device and lifting equipment, carried out a risk assessment and briefed all those involved.**

**I am satisfied the lift may proceed under my control.**

**Person in Charge** ..... **Role/Title** .....

**Signature** ..... **Date** .....

# Attachment 1: ARCADIS – Tierra Lift Plan

# ARCADIS Tierra Lift Plan & Contractor Checklist

Title: Filter Press Installation Date: September 20, 2011
Project: Passaic River Cleanup Job Number: _____
Description: Installation of filter presses & support structures/containers
Jobsite Address: 117 Blanchard Street, Newark, NJ
Customer: Stuyvesant Environmental P.O/ Contract#: _____
Lift Plan Drawing and Load Placement Drawing Attached? Yes XX No _____
Notes: _____

## Crane Information

Manufacture: Grove
Model: GMK6250
Serial #: _____
Crane Rating: 250 ton
Crane Inspection Date: _____
Notes: _____

## Lift Information

Crane Radius: 40'
Gross Capacity at Pick Point: 123,000lbs
Gross Capacity at Set Point: 123,000lbs
Crane Capacity: 123,000lbs
Notes: _____

## Crane Configuration

Crane Carrier: full outriggers
Counterweight: 154,000lbs
Chart Capacity: 123,000lbs
Main Boom Length: 106.5'
Boom Type: Hydraulic
Boom Sections: 5
Parts of Line: 6
Line Size: 22mm
Capacity of Line @ Parts: 21,000lbs x 6 parts
Radius: 40'
Boom Angle: 65deg
Tip Height: 106'
Jib Used: Yes _____ No XX
Jib Length: N/A
Jib Offset: N/A
Jib Angle from Ground: N/A
Ground Bearing Pressure (Worst Case): 196,584lbs

## Setup Information

Crane Setup: Over Rear _____ 360° XX
Over Front _____ Over Side _____
Setup Distance: 40'
Mat Used: Yes XX No ____
Mat Dimensions: 4'wide x 20'long x 1'thick
Ground Bearing Pressure below First Mat: _____
Notes: _____

## Load Configuration

Description: membrane filter presses
Dimensions: _____
Load Weight: 110,000 lbs
Rigging Weight: _____
Ancillary Equip Wt: _____
Other Weight: _____
Total Weight: _____
Hook Height: 106'
Sling Length: _____
Sling Angle: _____
Sling Equip#: _____
Sling Type: _____
Sling Capacity: _____
Spreader Bar #: _____
Spreader Bar Capacity: _____
Hook Block: 1,500lbs
Shackle Type: _____
Shackle Qty: _____
Shackle Capacity: _____
Additional Rigging: _____
Additional Rigging Capacity: _____
% of Chart Capacity: _____
Chart Capacity Deduct: _____%
Deduct Capacity: _____
Notes: _____

Title:__Filter Press Installation_____ Page #: _____2_____
Project:__Passaic River Cleanup_____Job Number:_____

**Jobsite Obstructions**

Front Obstruction Name:_____
Dimensions:_____
Rear Obstruction Name:_____
Dimensions:_____
Height Obstruction Name:_____
Dimensions:_____
Right Obstruction Name:_____
Dimensions:_____
Left Obstruction Name:_____
Dimensions:_____
Notes:_____

Notes:_____
_____
_____
_____
_____
_____
_____
_____
_____
_____
_____
_____

**Pre-Lift Checklist**

Crane Operator: Name:_____
Signalperson Assigned: Name:_____
Communication Method: _____
Crane Inspected by Operator? Yes_____No_____
Rigging Inspected? Yes_____No_____
All Permits Obtained? Yes_____No_____
Wind OK? Yes_____No_____
Are There Power Lines? Yes_____No_____
Are The Weather Conditions OK? Yes_____No_____
Is Operators Certification Card Current? Yes_____No_____
Is Area OK for Entry and Exit of Jobsite? Yes_____No_____
Has a Pre-Lift Meeting between Crane Operator, Signalperson, Supervisor, and Any and All Other Persons occurred? Yes_____No_____
Other Special Considerations:
_____
_____
_____
_____
_____

**Signatures**

Engineer: Name_____Signature_____Date_____

Supervisor: Name_____Signature_____Date_____

Operator: Name_____Signature_____Date_____

Client: Name_____Signature_____Date_____

# Attachment 2: Overview drawing

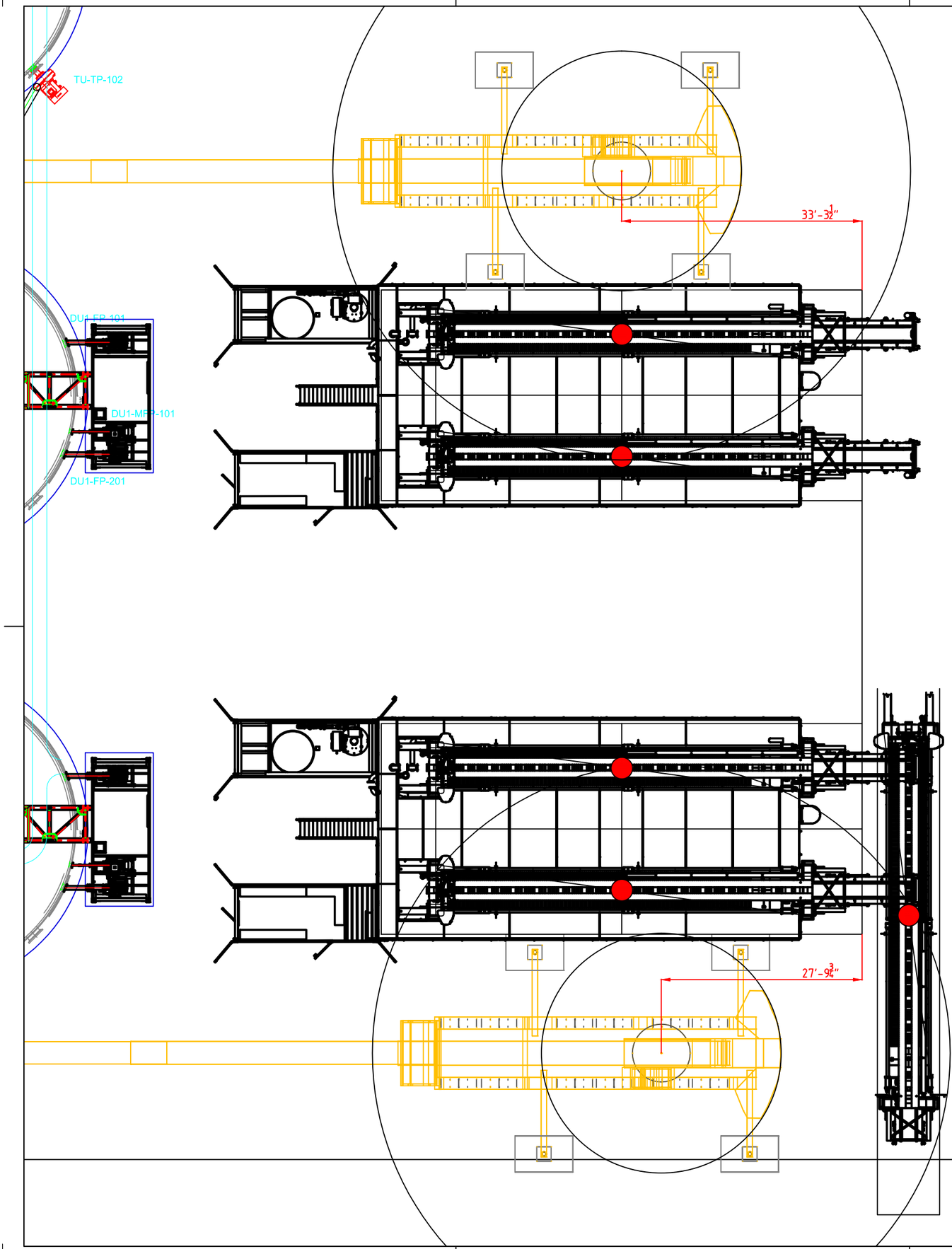


# Parts Presses

| Rev. | Date | Prepared | Checked | Approved | Remarks |
|---|---|---|---|---|---|
| | | | | | |
| | | | | | |
| | | | | | |
| | | | | | |
| | | | | | |
| | | | | | |
| | | | | | |

Client:

LOWER PASSAIC RIVER, NEWARK NJ

PHASE 1 CERCLA NON-TIME-CRITICAL

REMOVAL ACTION

LIFT PLAN MEMBRANE PRESSES

Design:
Boskalis Dolman bv
Rosmolenweg 20
P.O. Box 76
3350 AB Papendrecht
The Netherlands
Tel: +31 (0)78 69 69 900
Fax: +31 (0)78 69 69 901

Email: dolman@boskalis.nl
Internet: www.boskalisdolman.com

| | | | |
|---|---|---|---|
| Drawn: MDIJ | | Size: A1 (841x594mm) | |
| Checked: BKD | | Project number: P0769 | |
| Date: 09-22-2011 | | Drawing number: P0769-00-010 | Rev: |
| Scale: NA | | | |

P0769-00-001 LIFT PLAN.DWG

# Attachment 3: 3D lift plans

**CRANE**
Grove GMK6250-L
106.5' Main Boom at 65.9°
Base: 100% Outriggers
Counterweight: 154300 lbs
39' Lift Radius (360°)
Crane Capacity at 39' = 123,000 lbs

**LOAD**

| | |
|---|---|
| Hoist Line | 500 lbs |
| Block | 2,100 lbs |
| Hook | |
| Shackle | 100 lbs |
| Synthetic (2) | 300 lbs |
| Screw Pin Shackle (2) | 100 lbs |
| Lifting Lug (2) | |
| Load | 110,000 lbs |
| **TOTAL LOAD** | **113,100 lbs** |

92% of capacity
Sling Tension: 57,215 lbs

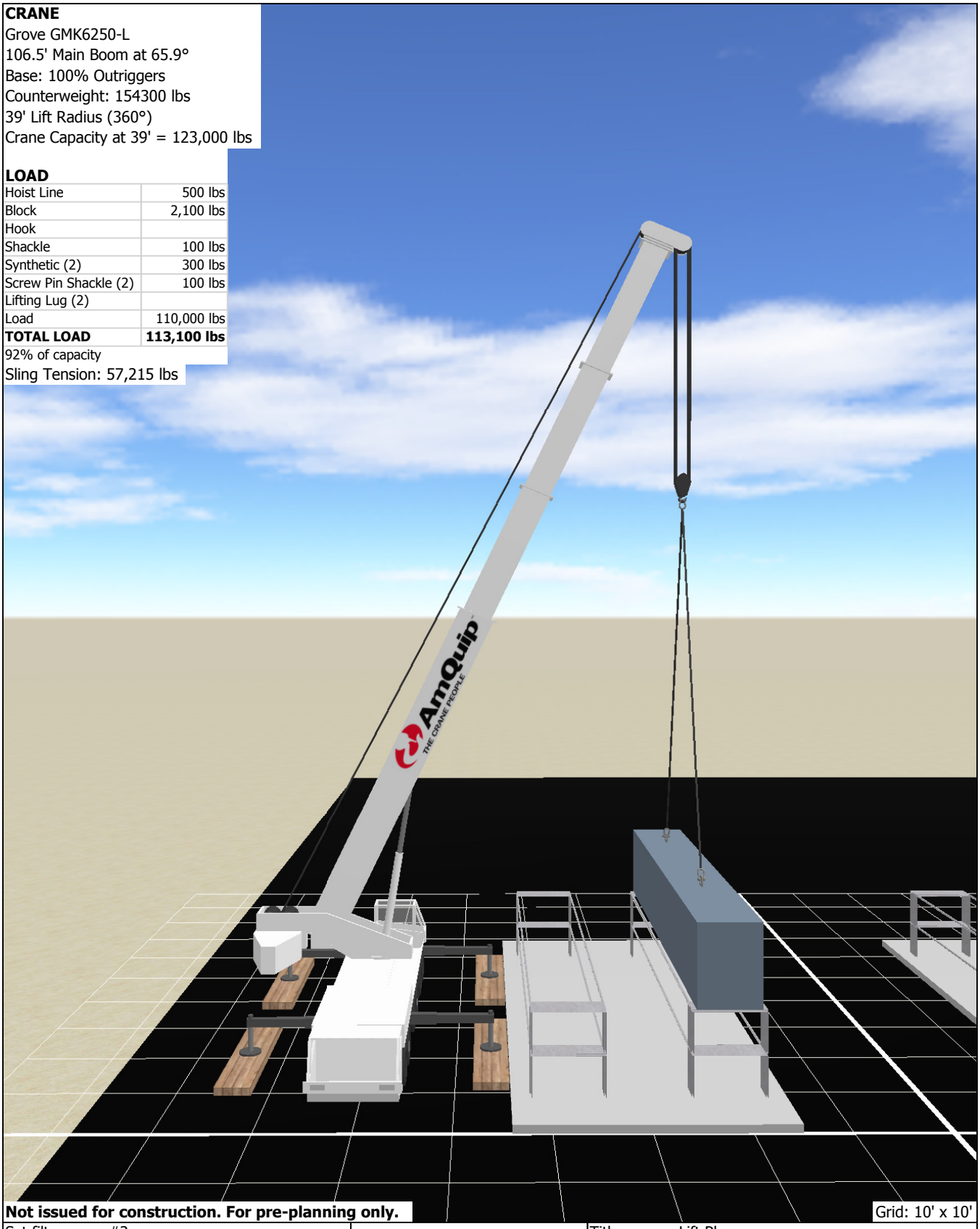


**Not issued for construction. For pre-planning only.**

Grid: 10' x 10'

Set filter press #2

AmQuip THE CRANE PEOPLE

| | |
|---|---|
| Title: | Lift Plan |
| Project: | Stuyvesant Environmental - Newark, NJ |
| Customer: | Stuyvesant Environmental |
| Description: | Set filter press |
| Drawn By: | Greg Hannold 9/20/2011 |

**CRANE**
Grove GMK6250-L
106.5' Main Boom at 75.7°
Base: 100% Outriggers
Counterweight: 154300 lbs
22' Lift Radius (360°)
Crane Capacity at 22' = 157,000 lbs

**LOAD**

| | |
|---|---|
| Hoist Line | 500 lbs |
| Block | 2,100 lbs |
| Hook | |
| Shackle | 100 lbs |
| Synthetic (2) | 300 lbs |
| Screw Pin Shackle (2) | 100 lbs |
| Lifting Lug (2) | |
| Load | 110,000 lbs |
| **TOTAL LOAD** | **113,100 lbs** |

72% of capacity
Sling Tension: 57,215 lbs

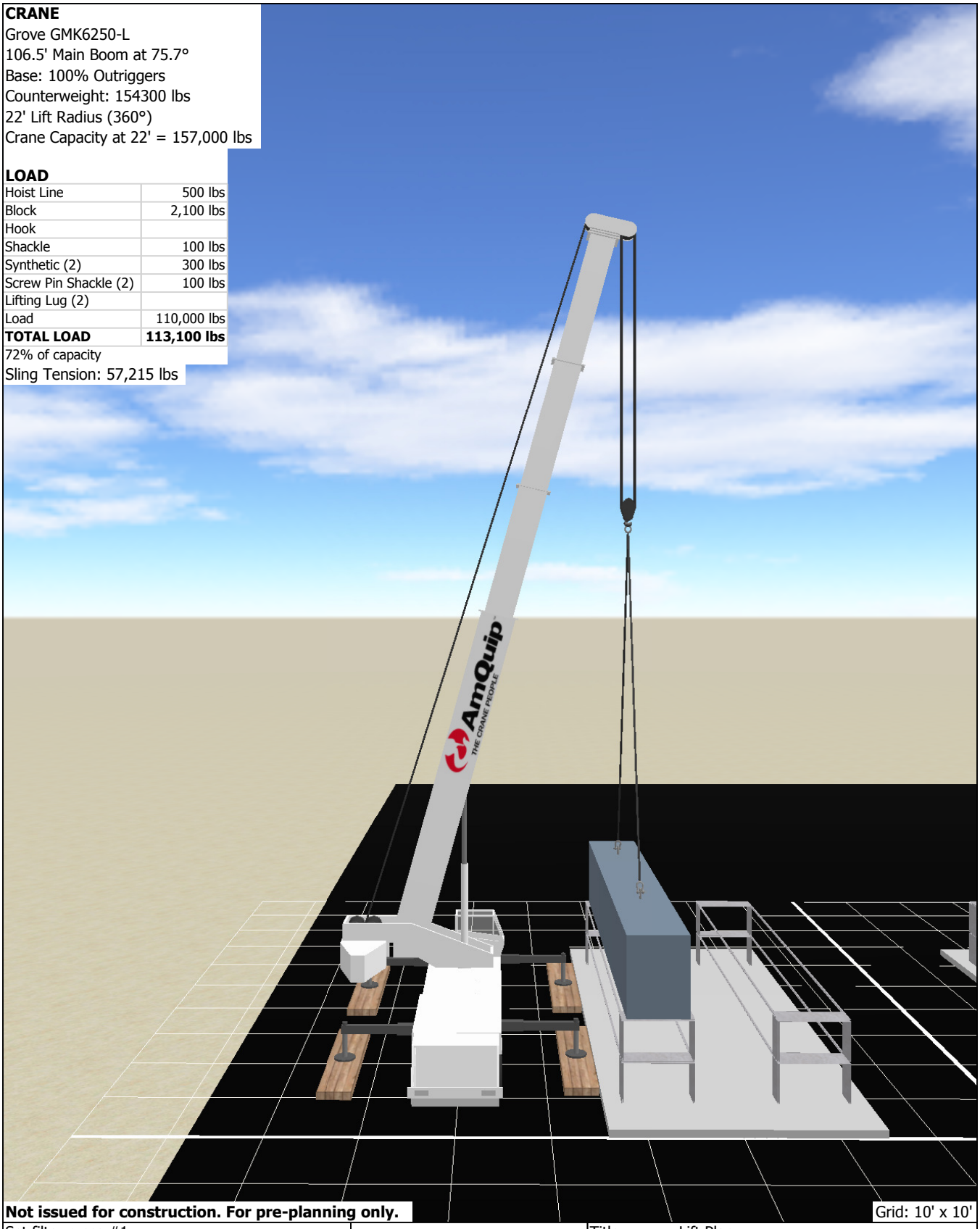


**Not issued for construction. For pre-planning only.**

Grid: 10' x 10'

Set filter press #1

AmQuip THE CRANE PEOPLE

| | |
|---|---|
| Title: | Lift Plan |
| Project: | Stuyvesant Environmental - Newark, NJ |
| Customer: | Stuyvesant Environmental |
| Description: | Set filter press |
| Drawn By: | Greg Hannold 9/20/2011 |

# Attachment 4: Outrigger pad loads

Grove Manitowoc National Crane Potain

Manitowoc

# Compu-Crane

Compu-Crane | Crane Downloads | Shopping Cart | Outrigger Pad Loads | Support (FAQ) | Contact Us

## Outrigger Pad Loads - GMK - Results

Enter Email > Select Model > Configure Boom > Lift Details > Results

Model: Grove GMK6250L w/ Main Boom Only - English
Boom Length: 106.5 ft [50-50-50-0-0]
Counterweight: 154300# Cwt
Support Base: 28.5 x 27.9
Load Radius: 40 ft
Load Weight: 110000 lbs

| | | | | | | |
|---|---|---|---|---|---|---|
| Slew Angle: 0° = Directly Over Rear | | Front Right: | 39658 lbs | 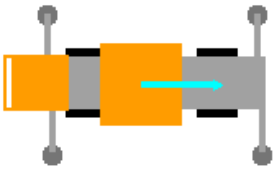 | Rear Right: | 164242 lbs |
| Max Chart Load = | 123000 lbs | Front Left: | 39658 lbs | | Rear Left: | 164242 lbs |
| Slew Angle: 45° = Over Rear Left Outrigger | | Front Right: | 24552 lbs | 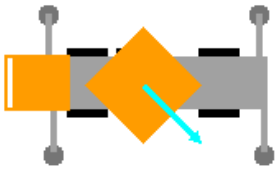 | Rear Right: | 99638 lbs |
| Max Chart Load = | 123000 lbs | Front Left: | 86926 lbs | | Rear Left: | 196584 lbs |
| Slew Angle: 90° = Directly Over Left Side | | Front Right: | 50550 lbs | 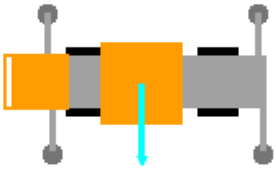 | Rear Right: | 40693 lbs |
| Max Chart Load = | 123000 lbs | Front Left: | 138744 lbs | | Rear Left: | 177802 lbs |
| Slew Angle: 135° = Over Front Left Outrigger | | Front Right: | 102368 lbs | 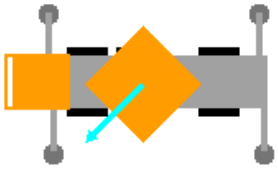 | Rear Right: | 21822 lbs |
| Max Chart Load = | 123000 lbs | Front Left: | 164742 lbs | | Rear Left: | 118767 lbs |
| Slew Angle: 180° = Directly Over Front | | Front Right: | 149647 lbs | 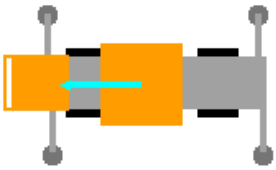 | Rear Right: | 54163 lbs |
| Max Chart Load = | 123000 lbs | Front Left: | 149647 lbs | | Rear Left: | 54163 lbs |
| Slew Angle: 225° = Over Front Right Outrigger | | Front Right: | 164742 lbs | | Rear Right: | 118767 lbs |

| | | | | | | |
|---|---|---|---|---|---|---|
| Max Chart Load = | 123000 lbs | Front Left: | 102368 lbs | 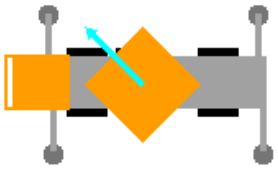 | Rear Left: | 21822 lbs |
| Slew Angle: 270° = Directly Over Right Side | | Front Right: | 138744 lbs | 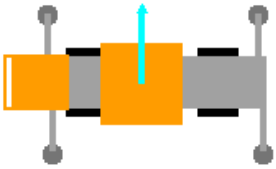 | Rear Right: | 177802 lbs |
| Max Chart Load = | 123000 lbs | Front Left: | 50550 lbs | | Rear Left: | 40693 lbs |
| Slew Angle: 315° = Over Rear Right Outrigger | | Front Right: | 86926 lbs | 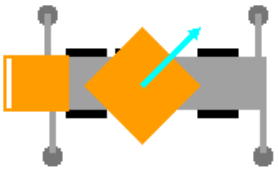 | Rear Right: | 196584 lbs |
| Max Chart Load = | 123000 lbs | Front Left: | 24552 lbs | | Rear Left: | 99638 lbs |
| Slew Angle: Maximum Outrigger Pad Loads | | Front Right: | 164742 lbs | 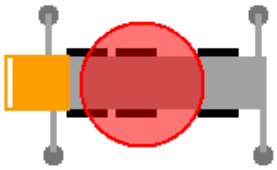 | Rear Right: | 196584 lbs |
| Max Chart Load = | 123000 lbs | Front Left: | 164742 lbs | | Rear Left: | 196584 lbs |

Back Start Over

©2009 Manitowoc | all rights reserved

# Attachment 5: Crane specifications

GROVE®

# GMK6250-L

## product guide

## features

- 250-ton (220 mt) capacity
- 51-236 ft. (15.5-72 m) 6-section full power MEGAFORM™ boom with Twin-Lock™ pinning
- 43-72 ft. (13-22 m) hydraulic offset bi-fold swingaway
- 2 X 26 ft. (8 m) intermediate lattice inserts
- 154,300 lb. (77.15 t) counterweight with hydraulic removal system
- Chassis engine: Mercedes-Benz OM 502 LA, 571 hp (420 kW), torque 1991 ft./lb. (2700 Nm)
- Superstructure engine: Mercedes-Benz OM 904 LA, 177 hp (130 kW), torque 487 ft./lb. (660 Nm)
- MEGATRAK™ independent hydro-pneumatic suspension

## contents


| | |
|---|---|
| Features | 2 |
| Specifications | 3 |
| Dimensions | 5 |
| Counterweight Dimensions | 6 |
| Working Range Main Boom | 7 |
| Load Charts | 8 |
| Working Range Hydraulic Offset Swingaway | 10 |
| Hydraulic Offset Swingaway Charts | 11 |
| Boom Extension Configurations | 13 |

All Terrain Crane

Manitowoc Crane Group

# features

2

MEGATRAK™ independent suspension and all wheel steer system allows all wheels to remain on the ground at all times so stresses and weight are not continually transferred between axles

ECOS (Electronic Crane Operating System) computerized system continuously monitors and controls principle crane functions as programmed by an operator

EKS4 electronic load moment indicator operates in conjunction with ECOS continuously displaying crane configuration and load moment data

MEGAFORM™ incorporates a “U” shape boom design which forms a natural cradle position for boom sections which eliminates stiffeners thus reducing weight and increasing capacity

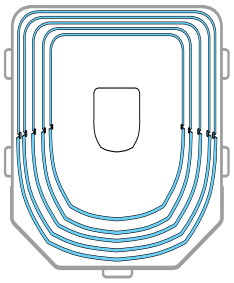

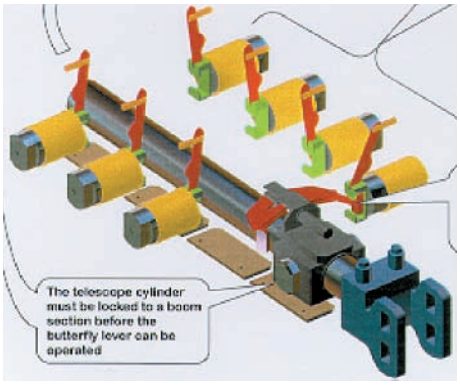


TWIN-LOCK™ boom pinning mechanism automatically pins the sections in position using two horizontal large diameter boom pins

## Superstructure

### Boom
51 ft. - 236 ft. (15.5 m - 72 m) six section, full-power boom with patented Twin-Lock™ boom pinning system. Maximum tip height: 246 ft. (75 m)

### Boom Elevation
Single lift cylinder with safety valve provides boom angle from -1.5° to +82°.

### Lattice Extension
43 ft. - 72 ft. (13 m - 22 m) lattice swingaway extension. Hydraulically offsettable 5° - 40° with hydraulic luffing.

### *Optional Lattice Jib Extension
Two 26 ft. (8 m) inserts for use with lattice swingaway extension to increase length up to 98 ft. (30 m) or
125 ft. (38 m).

### Load Moment & Anti-Two Block System
Load moment and anti-two block system with audio/visual warning and control lever lockout provides electronic display of boom angle, length, radius, tip height, relative load moment, maximum permissible load, load indication and warning of impending two-block condition.

### Cab
All aluminum construction cab is tiltable (approximately 20°) and includes safety glass and adjustable operator's seat with hydraulic suspension. Other features include engine dependent hot water heater, armrest integrated crane controls, and ergonomically arranged instrumentation.

### Swing
Three swing gears with axial piston fixed displacement motors provide swing speed of 0 - 1.7 RPM thru planetary gear box. Also provided is a spring applied, hydraulically released automatic swing brake with foot-operated release for free swing.

### Counterweight
154,300 lbs. (70 000 kg) consisting of various sections with hydraulic installation/removal system (See counterweight configuration on page 12).

### Engine
Mercedes Benz OM904LA, diesel, 4 cylinders, water-cooled, turbocharged, 177 HP (130 kW) at 2200 rpm. Max. torque: 487 ft. lbs. (660 Nm) at 1200 rpm.
Engine emission: EUROMOT/EPA/CARB (off highway)

### Fuel Tank Capacity
53 gal. (200 L)

### Hydraulic System
Three separate circuits, 2 axial piston variable displacement pumps, with electronic power limiting control and 1 axial piston variable displacement pump for swing. Standard thermostatically controlled oil cooler keeps oil at optimum operating temperature.
Tank capacity: 259 gal. (980 L)

### Control System
Full electronic control of all crane movements is accomplished using electrical control levers with automatic reset to zero. Controls are integrated with the LMI and engine management system by CAN-BUS.

### Hoist
Main and auxiliary hoist are powered by axial piston variable displacement motor with planetary gear and brake. "Thumb-thumper" hoist drum rotation indicator alerts operator of hoist movement.

| | Main | Auxiliary |
|---|---|---|
| Line length: | 984 ft. (300 m) | 755 ft. (230 m) |
| Rope diameter: | 22 mm | 22 mm |
| Line speed: | 426 ft./min. | 426 ft./min. |
| Line pull: | 21,000 lbs. (93.4 kN) | 21,000 lbs. (93.4 kN) |

### Electrical System
24 V system with three-phase alternator 28 V/80 A,
2 batteries 12 V/170 Ah.

### *Optional Equipment
*Engine-independent hot water heater, with engine pre-heater
*Second spotlight
*Stereo/cassette player
*Air conditioning
*Stainless steel exhaust system

* Denotes optional equipment

# specifications

## Carrier



### Chassis
Box-type, torsion resistant frame is fabricated from high-strength steel.

### Outrigger System
Hydraulic two-stage outrigger beams are extended by a single hydraulic cylinder and two cables. Outriggers can adjust to two positions:

Fully extended (100%) - 27 ft. 11 in. (8.5 m)
Partially extended (50%) - 19 ft. 8 in. (6 m)

Four 29.5 in. x 32 in. (750 mm x 810 mm), self stowing, steel outrigger pads provide rigid lifting base. Outrigger controls are located on both sides of the carrier. An electronic level indicator is located next to each outrigger control box.

### Engine
Mercedes-Benz OM502LA, diesel, 8 cylinders, water-cooled, turbocharged, 571 HP (420 kW) at 1800 rpm. Max. torque: 1991 ft. lbs. (2700 Nm) at 1080 rpm
Engine emission: EUROMOT/EPA/CARB (on highway)

### Fuel Tank Capacity
132 gal. (500 L)

### Transmission
Allison automatic CLT 755, 5 forward and 1 reverse speed. Transfer case with 2 speeds and inter-axle differential lock.

### Drive/Steer
12 x 6 x 12
*12 x 8 x 12

### Axles
6 axles. 1, 2, 4 and 5 are drive/steer. Axles 3 and 6 are steer only.

### Suspension
GMK6250-L features the Grove exclusive MEGATRAK™ suspension. This revolutionary design features an independent hydro-pneumatic system with hydraulic lockout acting on all wheels. The suspension can be raised 6-1/2 in. (170 mm) or lowered 5 in. (130 mm) both longitudinally and transversely and features an automatic leveling system for on-highway travel.

### Tires
12 tires, 16.00 R25 (vehicle width 9' 10")

### Steering
Dual circuit steering system is hydraulic power assisted with a transfer case mounted, ground driven, emergency steering pump. Axles 1, 2, 3, 5 and 6 steer on highway. Separate steering of the 4th, 5th and 6th axle for all wheel steer and crab-steer is controlled by an electric rocker switch.

### Brakes
A dual circuit air system operates on all wheels with a spring-applied, air released parking brake acting on axles 2, 4, 5 and 6. An air dryer is fitted to remove moisture from the air system. Auxiliary exhaust brake and constant throttle brake is standard.

### Cab
Two-man, aluminum construction driver's cab includes the following features: safety glass; driver and passenger seats with hydraulic suspension, engine-dependent hot water heater, complete instrumentation and driving controls.

### Electrical System
24 V system with three-phase alternator 28 V/100 A,
2 batteries 12 V/170 Ah.

### Maximum Speed
48 mph (77km/h) with 20.5 R25 tires

### Gradeability (Theoretical)
46% with 20.5 R25 tires

### Miscellaneous Standard Equipment
Boom removal kit; trailing boom kit (less dolly); additional hydraulic oil cooler; spare tire and wheel - 20.5 R25 with carry bracket; flashing amber warning light on carrier cab; working light; tool kit; fire extinguisher; rooster sheave; radio cassette in carrier cab.

### * Optional Equipment
* Electric driveline retarder
* 20.5 R25 tires (vehicle width 10 ft. 2 in. [3.1 m])
* 14.00 R25 tires (vehicle width 9 ft. 9 in. [2.98 m])
* Outrigger pressure measurement devices
* Engine-independent hot water heater, with engine pre-heater
* Trailing boom "boost" weight transfer kit
* Air conditioning

## Weights & Dimensions

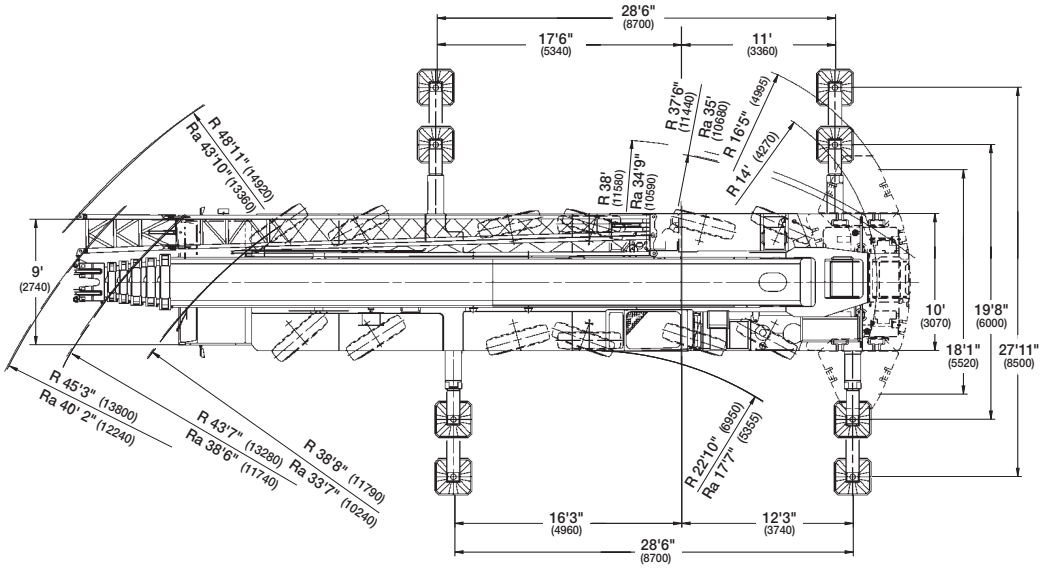


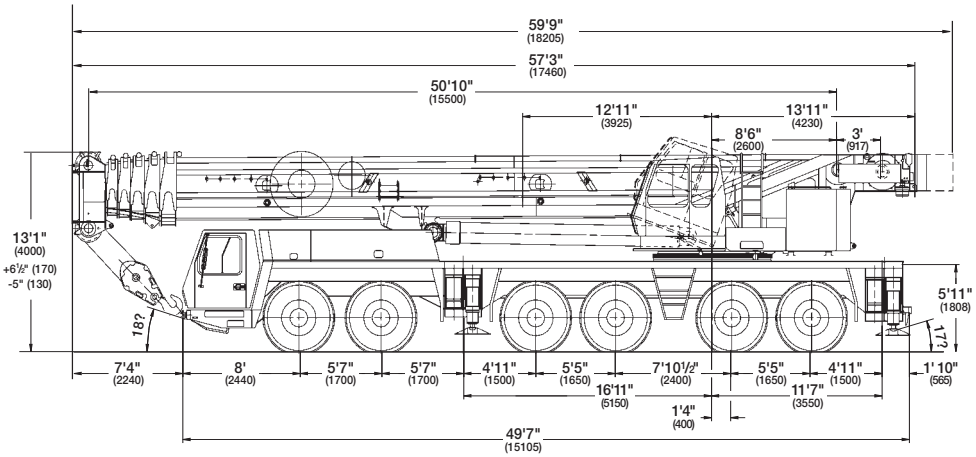


**Note: ( ) Reference dimensions in mm**

| BASIC WEIGHTS (LBS.) | Axles 1& 2 | Axles 3 - 6 | Total |
|---|---|---|---|
| With Mercedes Power, 20.5 R25 Tires (12x6x12) | 47,140 | 98,294 | 145,434 |
| Additions: | | | |
| Outrigger Pads | 0 | 772 | 772 |
| Auxiliary Hoist | -(2,892) | 6,618 | 3,726 |
| Additional Hydraulic Oil Cooler (Standard) | -(55) | 143 | 88 |
| Brackets & Hydraulic Reeling Drum for Lattice Extension | 485 | 22 | 507 |
| Lattice Extension - 43/72 ft | 6,997 | -(1,530) | 5,467 |
| Spare Tire - 14.00 R25 | -(425) | 1,010 | 584 |
| Spare Tire - 16.00 R25 | -(522) | 1,239 | 717 |
| Spare Tire - 20.5 R25 | -(593) | 1,402 | 809 |
| Boom Removal Equipment (Standard) | 53 | 212 | 265 |
| 12x8x12 drive | 966 | -(106) | 860 |
| Removal: | | | |
| Front Outrigger Beams & Jacks | -(3,377) | -(1,980) | -(5,357) |
| Rear Outrigger Beams & Jacks | 3,732 | -(9,652) | -(5,919) |
| Boom Assembly (minus lift cylinder)* | -(29,972) | -(20,889) | -(50,861) |
| Lift Cylinder* | -(1,457) | -(3,018) | -(4,475) |
| 16.00 R25 Tires in lieu | -(370) | -(741) | -(1,111) |
| 14.00 R25 Tires in lieu | -(899) | -(1,799) | -(2,698) |
| Rear Outrigger Box | 6,753 | -(17,555) | -(10,802) |

*Reflects weights with superstructure facing forward

# counterweight



1. 11,980 lbs. (5 400 kg)
2. 11,200 lbs. (5 100 kg)
3. 18,700 lbs. (8 500 kg)
4. 24,300 lbs. (11 000 kg)
5. 23,100 lbs. (10 500 kg)
6. 7,700 lbs. (3 500 kg)
7. 22,000 lbs. (10 000 kg)
8. 22,000 lbs. (10 000 kg)
9. 6,600 lbs. (3 000 kg)
10. 6,600 lbs. (3 000 kg)

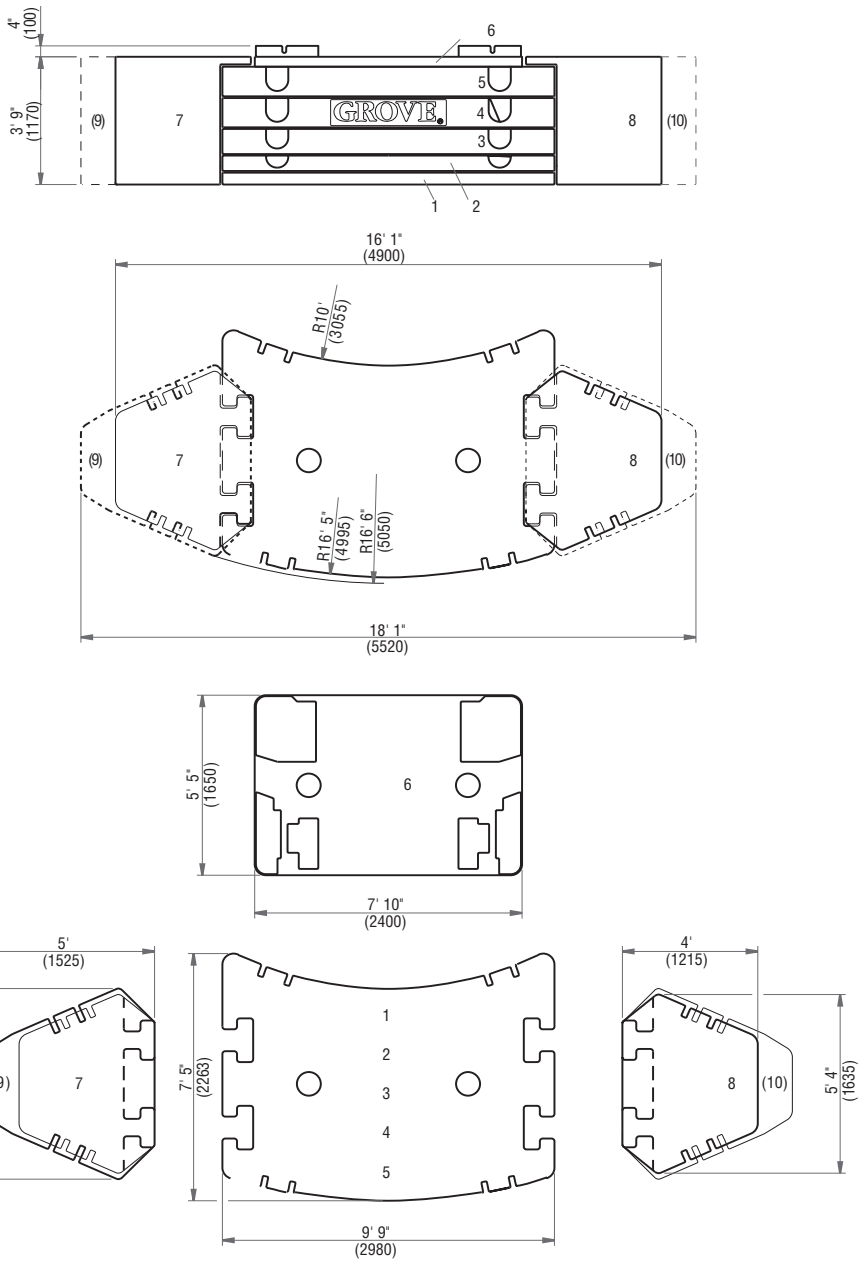


**Note: () Reference dimensions in mm**

| | 1 | 2 | 3 | 4 | 5 | 6 | 7 | 8 | 9 | 10 |
|---|---|---|---|---|---|---|---|---|---|---|
| 23,100 lbs. | x | x | | | | | | | | |
| 30,800 lbs. | x | x | | | | x | | | | |
| 49,600 lbs. | x | x | x | | | x | | | | |
| 73,800 lbs. | x | x | x | x | | x | | | | |
| 97,000 lbs. | x | x | x | x | x | x | | | | |
| 141,000 lbs. | x | x | x | x | x | x | * | * | | |
| 154,300 lbs. | x | x | x | x | x | x | x | x | x | x |

*NOTE: To utilize 141,000 lb. (64 000 kg) load chart optional counterweights for 7 & 8 may be provided weighing 22,050 lbs. (10 000 kg) each.

## 51'-236' (15.5-72m) Main Boom



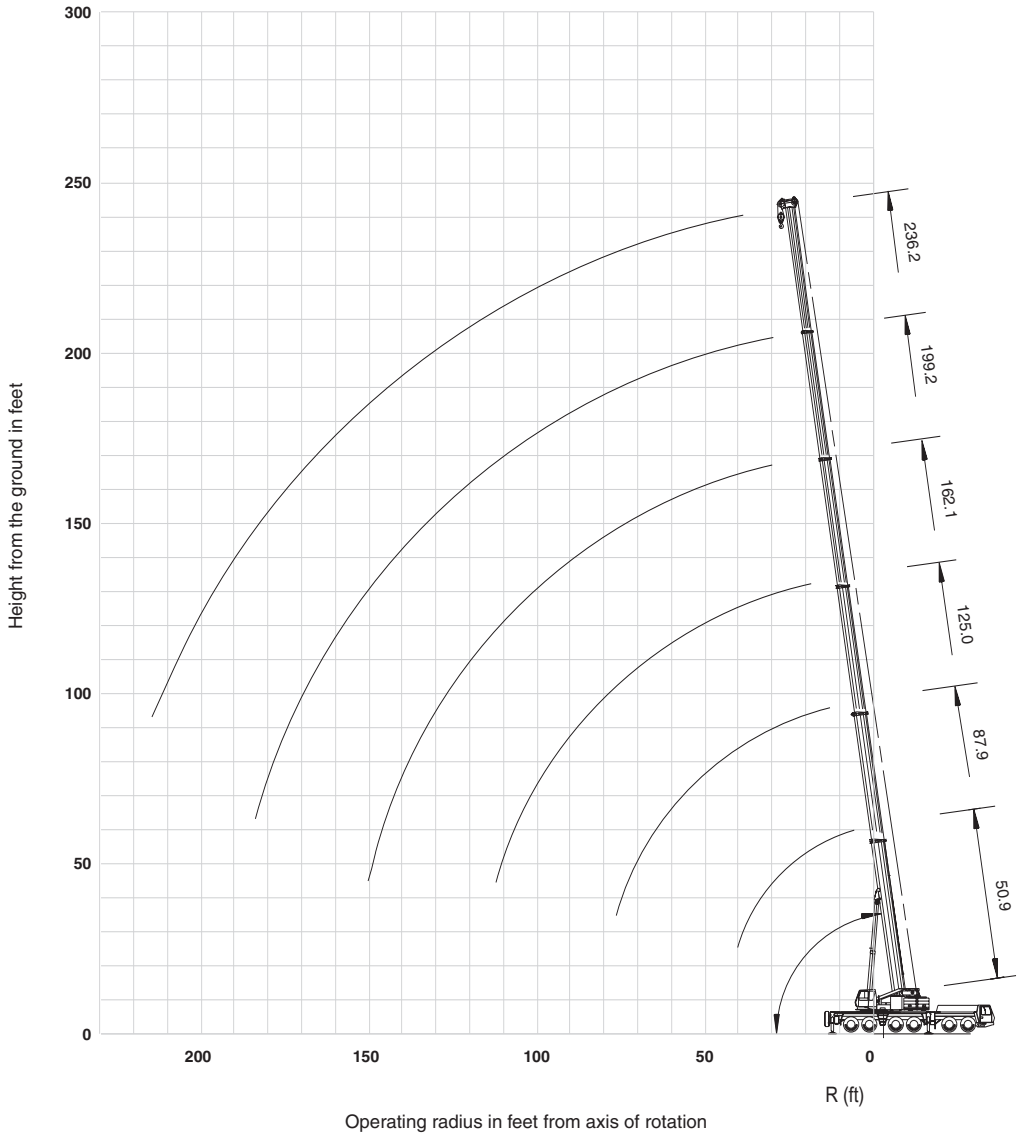




THIS CHART IS ONLY A GUIDE AND SHOULD NOT BE USED TO OPERATE THE CRANE. The individual crane's load chart, operating instructions and other instructional plates must be read and understood prior to operating the crane.

# load charts

51 - 236 ft. (15.5 - 72 m) | 154,300 lbs. (70mt) | 100% 27'11" Spread | 360°

Pounds (thousands)

| Feet | 50.9 | 69.4 | 87.9 | 106.5 | 125.0 | 143.5 | 162.1 | 180.6 | 199.2 | 217.7 | 236.2 |
|---|---|---|---|---|---|---|---|---|---|---|---|
| 8 | *406.0 | | | | | | | | | | |
| 10 | 382.0 | 308.0 | | | | | | | | | |
| 15 | 288.0 | 272.0 | 208.0 | | | | | | | | |
| 20 | 238.0 | 228.0 | 208.0 | 157.0 | 120.0 | | | | | | |
| 25 | 200.0 | 196.0 | 188.0 | 157.0 | 120.0 | 93.0 | | | | | |
| 30 | 169.0 | 171.0 | 163.0 | 150.0 | 120.0 | 93.0 | 69.0 | 52.0 | | | |
| 35 | 140.0 | 147.0 | 143.0 | 139.0 | 118.0 | 93.0 | 69.0 | 52.0 | | | |
| 40 | | 124.0 | 121.0 | 123.0 | 111.0 | 89.0 | 69.0 | 53.0 | 39.6 | 30.8 | |
| 45 | | 107.0 | 104.0 | 106.0 | 103.0 | 84.0 | 65.0 | 52.0 | 39.6 | 30.8 | |
| 50 | | 94.0 | 90.0 | 92.0 | 94.0 | 79.0 | 61.0 | 52.0 | 39.6 | 30.8 | 26.4 |
| 55 | | 81.0 | 79.0 | 81.0 | 83.0 | 75.0 | 58.0 | 50.0 | 39.6 | 30.8 | 26.4 |
| 60 | | | 70.0 | 75.0 | 74.0 | 71.0 | 54.0 | 47.0 | 39.6 | 30.8 | 26.4 |
| 65 | | | 62.0 | 68.0 | 67.0 | 67.0 | 50.0 | 43.8 | 39.2 | 30.8 | 26.4 |
| 70 | | | 56.0 | 62.0 | 60.0 | 62.0 | 47.0 | 41.4 | 37.2 | 30.8 | 26.4 |
| 75 | | | | 56.0 | 55.0 | 57.0 | 44.0 | 39.0 | 35.4 | 30.8 | 26.4 |
| 80 | | | | 51.0 | 52.0 | 52.0 | 41.2 | 36.6 | 33.4 | 30.8 | 26.4 |
| 85 | | | | 47.0 | 48.0 | 47.0 | 38.2 | 34.2 | 31.6 | 29.4 | 26.4 |
| 90 | | | | 43.2 | 45.0 | 43.6 | 36.0 | 32.4 | 29.8 | 28.0 | 26.0 |
| 95 | | | | | 42.0 | 40.2 | 34.0 | 30.4 | 28.2 | 26.6 | 25.2 |
| 100 | | | | | 39.0 | 37.2 | 32.6 | 28.4 | 26.6 | 25.4 | 24.2 |
| 105 | | | | | 36.4 | 34.6 | 31.4 | 26.4 | 25.0 | 24.0 | 22.8 |
| 110 | | | | | 31.8 | 32.0 | 30.2 | 24.6 | 23.6 | 22.6 | 21.4 |
| 115 | | | | | | 29.8 | 29.0 | 22.6 | 22.0 | 21.2 | 20.0 |
| 120 | | | | | | 27.8 | 28.0 | 21.0 | 20.6 | 19.8 | 18.8 |
| 125 | | | | | | 26.0 | 27.0 | 20.0 | 19.0 | 18.4 | 18.0 |
| 130 | | | | | | 23.4 | 25.8 | 19.2 | 17.6 | 17.0 | 17.0 |
| 135 | | | | | | | 24.2 | 18.6 | 16.6 | 16.2 | 16.2 |
| 140 | | | | | | | 22.4 | 18.0 | 15.8 | 15.4 | 15.4 |
| 145 | | | | | | | 20.2 | 17.4 | 15.0 | 14.6 | 14.6 |
| 150 | | | | | | | 13.8 | 17.0 | 14.4 | 14.0 | 14.0 |
| 155 | | | | | | | | 16.4 | 13.8 | 13.4 | 13.2 |
| 160 | | | | | | | | 15.8 | 13.2 | 12.6 | 12.4 |
| 165 | | | | | | | | | 12.6 | 12.0 | 11.8 |
| 170 | | | | | | | | | 12.2 | 11.6 | 11.2 |
| 175 | | | | | | | | | 11.8 | 11.2 | 10.6 |
| 180 | | | | | | | | | 11.4 | 10.6 | 10.2 |
| 185 | | | | | | | | | | 10.2 | 9.6 |
| 190 | | | | | | | | | | 9.8 | 9.0 |
| 195 | | | | | | | | | | 9.2 | 8.4 |
| 200 | | | | | | | | | | 8.8 | 8.0 |
| 205 | | | | | | | | | | | 7.6 |
| 210 | | | | | | | | | | | 7.0 |
| 215 | | | | | | | | | | | 6.2 |

Loads >350,000 lb. can only be lifted with additional equipment
*Over rear, 19.7 ft. outrigger span

51 - 236 ft. (15.5 - 72 m) | 97,000 lbs. (44mt) | 100% 27'11" Spread | 360°

Pounds (thousands)

| Feet | 50.9 | 69.4 | 87.9 | 106.5 | 125.0 | 143.5 | 162.1 | 180.6 | 199.2 | 217.7 | 236.2 |
|---|---|---|---|---|---|---|---|---|---|---|---|
| 8 | *406.0 | | | | | | | | | | |
| 10 | 382.0 | 308.0 | | | | | | | | | |
| 15 | 288.0 | 272.0 | 208.0 | | | | | | | | |
| 20 | 238.0 | 228.0 | 208.0 | 157.0 | 120.0 | | | | | | |
| 25 | 188.0 | 190.0 | 186.0 | 157.0 | 120.0 | 93.0 | | | | | |
| 30 | 149.0 | 151.0 | 147.0 | 149.0 | 120.0 | 93.0 | 69.0 | 52.0 | | | |
| 35 | 122.0 | 124.0 | 121.0 | 123.0 | 118.0 | 93.0 | 69.0 | 52.0 | | | |
| 40 | | 106.0 | 101.0 | 104.0 | 101.0 | 89.0 | 69.0 | 52.0 | 39.6 | 30.8 | |
| 45 | | 92.0 | 86.0 | 92.0 | 86.0 | 84.0 | 65.0 | 52.0 | 39.6 | 30.8 | |
| 50 | | 80.0 | 75.0 | 80.0 | 75.0 | 75.0 | 61.0 | 52.0 | 39.6 | 30.8 | 26.4 |
| 55 | | 70.0 | 65.0 | 70.0 | 70.0 | 66.0 | 58.0 | 50.0 | 39.6 | 30.8 | 26.4 |
| 60 | | | 56.0 | 62.0 | 63.0 | 58.0 | 54.0 | 47.0 | 39.6 | 30.8 | 26.4 |
| 65 | | | 49.0 | 55.5 | 56.0 | 52.0 | 48.0 | 43.8 | 39.2 | 30.8 | 26.4 |
| 70 | | | 45.0 | 50.0 | 51.0 | 47.0 | 43.6 | 41.4 | 37.2 | 30.8 | 26.4 |
| 75 | | | | 47.0 | 46.0 | 42.0 | 41.4 | 37.2 | 35.4 | 30.8 | 26.4 |
| 80 | | | | 42.4 | 41.4 | 38.0 | 39.2 | 33.4 | 33.4 | 30.8 | 26.4 |
| 85 | | | | 38.4 | 37.2 | 34.4 | 35.8 | 30.0 | 30.2 | 29.4 | 26.4 |
| 90 | | | | 34.8 | 33.6 | 32.4 | 32.6 | 28.2 | 27.2 | 27.6 | 26.0 |
| 95 | | | | | 30.2 | 31.0 | 29.8 | 27.0 | 24.6 | 25.0 | 25.2 |
| 100 | | | | | 27.4 | 29.6 | 27.4 | 25.6 | 23.2 | 23.8 | 23.6 |
| 105 | | | | | 25.4 | 27.0 | 24.8 | 24.4 | 22.2 | 22.6 | 21.6 |
| 110 | | | | | 24.4 | 24.6 | 22.6 | 23.0 | 21.0 | 21.4 | 19.6 |
| 115 | | | | | | 22.6 | 20.4 | 21.4 | 20.0 | 20.2 | 18.0 |
| 120 | | | | | | 20.8 | 18.8 | 19.4 | 18.8 | 18.6 | 16.4 |
| 125 | | | | | | 19.0 | 18.0 | 17.8 | 17.8 | 17.0 | 15.0 |
| 130 | | | | | | 17.4 | 17.4 | 16.2 | 16.8 | 15.8 | 13.6 |
| 135 | | | | | | | 16.8 | 14.8 | 15.2 | 14.4 | 12.4 |
| 140 | | | | | | | 15.4 | 14.0 | 14.0 | 13.2 | 11.2 |
| 145 | | | | | | | 14.4 | 13.4 | 13.2 | 12.0 | 10.2 |
| 150 | | | | | | | 13.2 | 12.8 | 12.2 | 11.0 | 9.2 |
| 155 | | | | | | | | 12.0 | 11.0 | 9.8 | 8.2 |
| 160 | | | | | | | | 11.0 | 10.0 | 9.0 | 7.4 |
| 165 | | | | | | | | | 9.2 | 8.0 | 6.4 |
| 170 | | | | | | | | | 8.4 | 7.2 | 5.6 |
| 175 | | | | | | | | | 7.6 | 6.4 | 4.8 |
| 180 | | | | | | | | | 6.8 | 5.6 | 4.0 |
| 185 | | | | | | | | | | 4.8 | 3.4 |
| 190 | | | | | | | | | | 4.2 | 2.6 |
| 195 | | | | | | | | | | 3.6 | |
| 200 | | | | | | | | | | 3.0 | |

Loads >350,000 lb. can only be lifted with additional equipment
*Over rear, 19.7 ft. outrigger span



GROVE

THIS CHART IS ONLY A GUIDE AND SHOULD NOT BE USED TO OPERATE THE CRANE. The individual crane's load chart, operating instructions and other instructional plates must be read and understood prior to operating the crane.

51 - 236 ft. (15.5 - 72 m) | 49,600 lbs. (22.5mt) | 100% 27'11" Spread | 360°

Pounds (thousands)

| Feet | 50.9 | 69.4 | 87.9 | 106.5 | 125.0 | 143.5 | 162.1 | 180.6 | 199.2 | 217.7 | 236.2 |
|---|---|---|---|---|---|---|---|---|---|---|---|
| 10 | 382.0 | 308.0 | | | | | | | | | |
| 15 | 288.0 | 272.0 | 208.0 | | | | | | | | |
| 20 | 213.0 | 212.0 | 205.0 | 157.0 | 120.0 | | | | | | |
| 25 | 161.0 | 163.0 | 148.0 | 140.0 | 120.0 | 93.0 | | | | | |
| 30 | 127.0 | 130.0 | 112.0 | 114.0 | 105.0 | 93.0 | 69.0 | 52.0 | | | |
| 35 | 102.0 | 104.0 | 89.0 | 93.0 | 91.0 | 84.0 | 69.0 | 52.0 | | | |
| 40 | | 85.0 | 73.0 | 80.0 | 76.0 | 69.0 | 64.0 | 52.0 | 39.6 | 30.8 | |
| 45 | | 69.0 | 66.0 | 69.0 | 64.0 | 58.0 | 57.0 | 51.0 | 39.6 | 30.8 | |
| 50 | | 59.0 | 61.0 | 59.0 | 55.0 | 52.0 | 50.0 | 43.2 | 39.6 | 30.8 | 26.4 |
| 55 | | 50.0 | 53.0 | 51.0 | 47.0 | 48.0 | 43.6 | 40.6 | 36.6 | 30.8 | 26.4 |
| 60 | | | 45.0 | 44.0 | 41.2 | 42.2 | 38.2 | 37.8 | 34.2 | 30.8 | 26.4 |
| 65 | | | 39.2 | 39.2 | 38.0 | 37.4 | 34.2 | 33.4 | 32.6 | 29.4 | 26.4 |
| 70 | | | 34.0 | 34.6 | 36.0 | 33.2 | 32.4 | 30.0 | 30.0 | 27.6 | 24.8 |
| 75 | | | | 30.2 | 32.2 | 29.6 | 29.6 | 28.4 | 26.6 | 24.4 | 21.6 |
| 80 | | | | 28.0 | 29.0 | 26.4 | 26.4 | 25.4 | 23.8 | 21.6 | 19.0 |
| 85 | | | | 25.8 | 25.8 | 24.8 | 23.8 | 22.8 | 21.2 | 19.2 | 16.6 |
| 90 | | | | 23.0 | 23.0 | 23.2 | 21.4 | 20.4 | 19.0 | 17.0 | 14.6 |
| 95 | | | | | 20.4 | 21.2 | 19.2 | 18.4 | 17.0 | 15.0 | 12.6 |
| 100 | | | | | 18.2 | 19.0 | 18.0 | 16.6 | 15.2 | 13.2 | 11.0 |
| 105 | | | | | 16.2 | 17.0 | 16.2 | 14.8 | 13.6 | 11.6 | 9.4 |
| 110 | | | | | 14.4 | 15.2 | 14.6 | 13.4 | 12.0 | 10.2 | 8.2 |
| 115 | | | | | | 13.6 | 13.0 | 12.0 | 10.8 | 9.0 | 6.8 |
| 120 | | | | | | 12.2 | 11.6 | 10.8 | 9.6 | 7.8 | 5.6 |
| 125 | | | | | | 11.0 | 10.2 | 9.6 | 8.4 | 6.6 | 4.6 |
| 130 | | | | | | 9.8 | 9.2 | 8.4 | 7.4 | 5.6 | 3.6 |
| 135 | | | | | | | 8.0 | 7.4 | 6.4 | 4.8 | 2.8 |
| 140 | | | | | | | 7.2 | 6.4 | 5.6 | 3.8 | |
| 145 | | | | | | | 6.2 | 5.4 | 4.6 | 3.0 | |
| 150 | | | | | | | 5.4 | 4.6 | 3.8 | | |
| 155 | | | | | | | | 4.0 | 3.0 | | |
| 160 | | | | | | | | 3.2 | | | |

Loads >350,000 lb. can only be lifted with additional equipment

51 - 236 ft. (15.5 - 72 m) | 30,800 lbs. (14mt) | 100% 27'11" Spread | 360°

Pounds (thousands)

| Feet | 50.9 | 69.4 | 87.9 | 106.5 | 125.0 | 143.5 | 162.1 | 180.6 | 199.2 | 217.7 | 236.2 |
|---|---|---|---|---|---|---|---|---|---|---|---|
| 10 | 382.0 | 308.0 | | | | | | | | | |
| 15 | 288.0 | 272.0 | 208.0 | | | | | | | | |
| 20 | 199.0 | 202.0 | 175.0 | 157.0 | 120.0 | | | | | | |
| 25 | 150.0 | 147.0 | 125.0 | 126.0 | 114.0 | 93.0 | | | | | |
| 30 | 112.0 | 111.0 | 93.0 | 98.0 | 94.0 | 85.0 | 69.0 | 52.0 | | | |
| 35 | 84.0 | 86.0 | 81.0 | 82.0 | 75.0 | 68.0 | 63.0 | 52.0 | | | |
| 40 | | 70.0 | 70.0 | 67.0 | 62.0 | 60.0 | 56.0 | 48.0 | 39.6 | 30.8 | |
| 45 | | 59.0 | 58.0 | 56.0 | 52.0 | 52.0 | 47.0 | 44.0 | 38.4 | 30.8 | |
| 50 | | 48.0 | 49.0 | 47.0 | 48.0 | 44.0 | 41.6 | 39.0 | 34.2 | 30.8 | 26.4 |
| 55 | | 39.8 | 41.8 | 40.2 | 41.4 | 38.0 | 37.4 | 35.8 | 33.4 | 29.4 | 26.4 |
| 60 | | | 35.8 | 35.8 | 35.8 | 33.6 | 32.4 | 31.0 | 29.0 | 26.2 | 23.2 |
| 65 | | | 30.2 | 32.8 | 31.2 | 30.8 | 29.0 | 27.0 | 25.2 | 22.6 | 19.8 |
| 70 | | | 26.2 | 28.8 | 27.4 | 27.2 | 25.4 | 23.6 | 21.8 | 19.6 | 17.0 |
| 75 | | | | 25.0 | 24.0 | 24.0 | 22.4 | 20.8 | 19.2 | 16.8 | 14.4 |
| 80 | | | | 21.8 | 21.2 | 21.2 | 19.8 | 18.2 | 16.6 | 14.6 | 12.2 |
| 85 | | | | 19.0 | 18.8 | 19.0 | 17.4 | 16.0 | 14.6 | 12.6 | 10.2 |
| 90 | | | | 16.4 | 16.4 | 16.8 | 15.4 | 14.0 | 12.6 | 10.8 | 8.4 |
| 95 | | | | | 14.2 | 15.0 | 13.6 | 12.4 | 11.0 | 9.2 | 6.8 |
| 100 | | | | | 12.4 | 13.2 | 12.0 | 10.8 | 9.4 | 7.6 | 5.4 |
| 105 | | | | | 10.8 | 11.6 | 10.6 | 9.4 | 8.2 | 6.4 | 4.2 |
| 110 | | | | | 9.4 | 10.2 | 9.4 | 8.2 | 6.8 | 5.2 | 3.0 |
| 115 | | | | | | 8.8 | 8.2 | 7.0 | 5.8 | 4.0 | |
| 120 | | | | | | 7.6 | 7.0 | 6.0 | 4.8 | 3.0 | |
| 125 | | | | | | 6.6 | 5.8 | 5.0 | 3.8 | | |
| 130 | | | | | | 5.6 | 5.0 | 4.2 | 3.0 | | |
| 135 | | | | | | | 4.0 | 3.4 | | | |
| 140 | | | | | | | 3.2 | | | | |

Loads >350,000 lb. can only be lifted with additional equipment

51 - 236 ft. (15.5 - 72 m) | 0 lbs. (0mt) | 100% 27'11" Spread | 360°

Pounds (thousands)

| Feet | 50.9 | 69.4 | 87.9 | 106.5 | 125.0 | 143.5 | 162.1 | 180.6 | 199.2 | 217.7 | 236.2 |
|---|---|---|---|---|---|---|---|---|---|---|---|
| 10 | 382.0 | 308.0 | | | | | | | | | |
| 15 | 260.0 | 212.0 | 172.0 | | | | | | | | |
| 20 | 152.0 | 137.0 | 116.0 | 112.0 | 97.0 | | | | | | |
| 25 | 100.0 | 95.0 | 89.0 | 81.0 | 72.0 | 68.0 | | | | | |
| 30 | 68.0 | 69.0 | 65.0 | 62.0 | 58.0 | 54.0 | 48.0 | 41.4 | | | |
| 35 | 49.0 | 51.0 | 50.0 | 50.0 | 45.0 | 43.2 | 39.2 | 35.4 | | | |
| 40 | | 38.6 | 39.4 | 39.4 | 36.4 | 34.8 | 31.8 | 28.6 | 25.8 | 22.2 | |
| 45 | | 30.0 | 31.4 | 32.0 | 29.6 | 28.6 | 26.0 | 23.4 | 21.0 | 17.8 | |
| 50 | | 23.8 | 25.4 | 26.4 | 24.4 | 23.8 | 21.6 | 19.2 | 17.0 | 14.2 | 11.2 |
| 55 | | 19.0 | 20.6 | 21.8 | 20.2 | 19.8 | 17.8 | 15.8 | 13.8 | 11.4 | 8.6 |
| 60 | | | 16.8 | 18.2 | 16.8 | 16.6 | 14.8 | 13.0 | 11.2 | 8.8 | 6.2 |
| 65 | | | 13.8 | 15.2 | 14.0 | 13.8 | 12.2 | 10.6 | 9.0 | 6.8 | 4.2 |
| 70 | | | 11.2 | 12.8 | 11.6 | 11.6 | 10.0 | 8.6 | 7.0 | 5.0 | |
| 75 | | | | 10.6 | 9.6 | 9.6 | 8.2 | 6.8 | 5.4 | 3.4 | |
| 80 | | | | 8.8 | 7.8 | 8.0 | 6.6 | 5.2 | 3.8 | | |
| 85 | | | | 7.2 | 6.2 | 6.4 | 5.2 | 3.8 | | | |
| 90 | | | | 5.8 | 5.0 | 5.2 | 4.0 | 2.6 | | | |
| 95 | | | | | 3.8 | 4.0 | 2.8 | | | | |
| 100 | | | | | 2.8 | 3.0 | | | | | |

Loads >350,000 lb. can only be lifted with additional equipment

THIS CHART IS ONLY A GUIDE AND SHOULD NOT BE USED TO OPERATE THE CRANE. The individual crane's load chart, operating instructions and other instructional plates must be read and understood prior to operating the crane.

# working range

**236' (72m) Main Boom With 43'-72' (13-22m) Lattice Swingaway Extension and Two 26' (8m) Inserts**



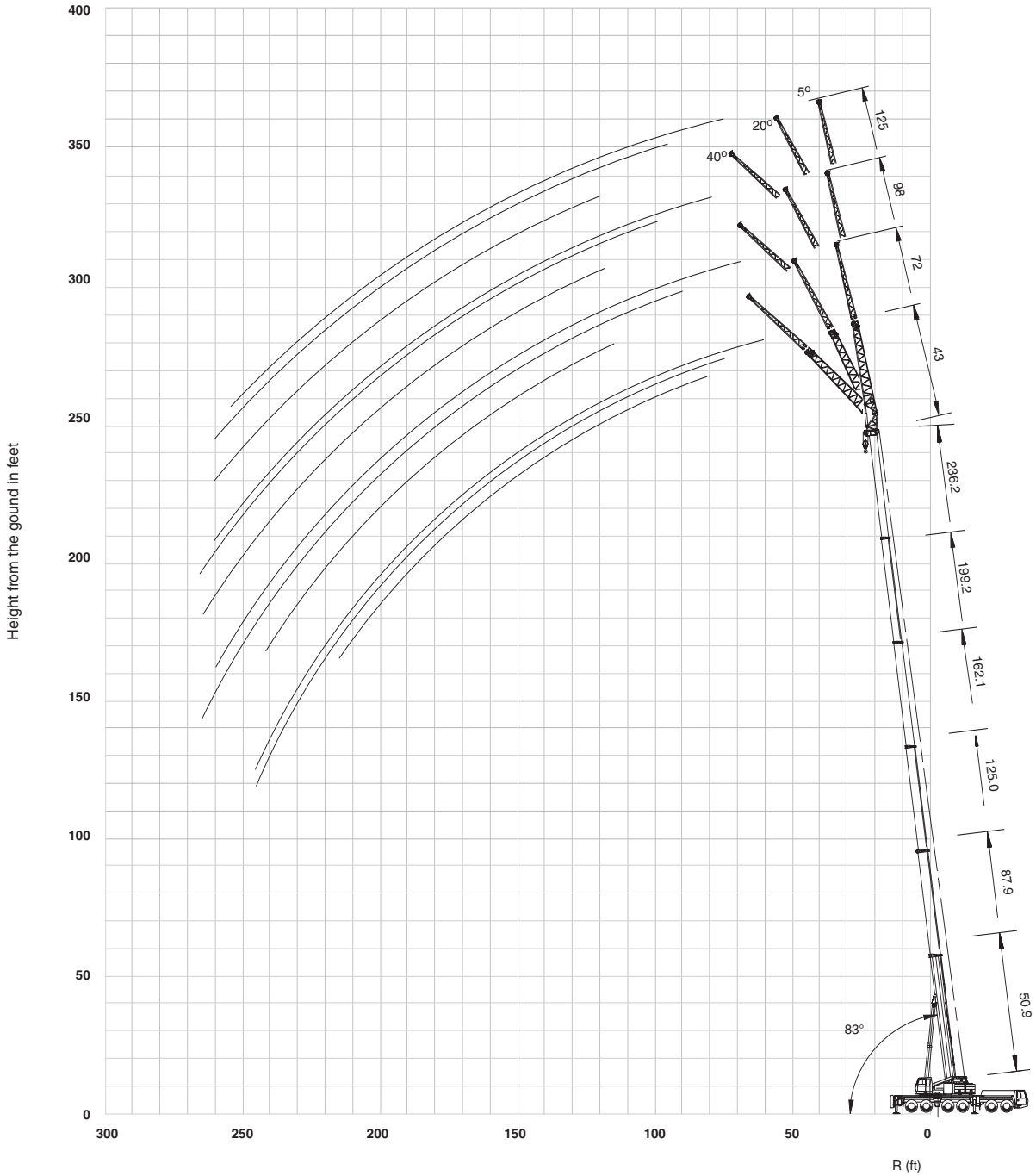






THIS CHART IS ONLY A GUIDE AND SHOULD NOT BE USED TO OPERATE THE CRANE. The individual crane's load chart, operating instructions and other instructional plates must be read and understood prior to operating the crane.

236 ft. (72 m) | 43-72-98-125 ft. (13-22-30-38 m) | 154,300 lbs. (70mt) | 100% 27'11" Spread | 360°

Pounds (thousands)

| Feet | 43 FT 5° | 43 FT 20° | 43 FT 40° | 72 FT 5° | 72 FT 20° | 72 FT 40° | 98 FT 5° | 98 FT 20° | 98 FT 40° | 125 FT 5° | 125 FT 20° | 125 FT 40° |
|---|---|---|---|---|---|---|---|---|---|---|---|---|
| 50 | 13.8 | | | | | | | | | | | |
| 55 | 13.8 | | | | | | | | | | | |
| 60 | 13.8 | 13.6 | | 9.0 | | | | | | | | |
| 65 | 13.8 | 13.6 | | 9.0 | | | | | | | | |
| 70 | 13.8 | 13.6 | | 9.0 | | | 6.6 | | | | | |
| 75 | 13.8 | 13.6 | 13.6 | 9.0 | | | 6.6 | | | 4.4 | | |
| 80 | 13.8 | 13.6 | 13.6 | 9.0 | 8.6 | | 6.6 | | | 4.4 | | |
| 85 | 13.8 | 13.6 | 13.6 | 9.0 | 8.6 | | 6.6 | | | 4.4 | | |
| 90 | 13.8 | 13.6 | 13.6 | 9.0 | 8.6 | | 6.6 | 6.6 | | 4.4 | | |
| 95 | 13.8 | 13.6 | 13.6 | 9.0 | 8.6 | | 6.6 | 6.6 | | 4.4 | 4.4 | |
| 100 | 13.8 | 13.6 | 13.6 | 9.0 | 8.6 | 8.6 | 6.6 | 6.6 | | 4.4 | 4.4 | |
| 105 | 13.8 | 13.6 | 13.6 | 9.0 | 8.6 | 8.6 | 6.6 | 6.6 | | 4.4 | 4.4 | |
| 110 | 13.8 | 13.6 | 13.6 | 9.0 | 8.6 | 8.6 | 6.6 | 6.6 | | 4.4 | 4.4 | |
| 115 | 13.8 | 13.6 | 13.6 | 9.0 | 8.6 | 8.6 | 6.6 | 6.6 | 6.6 | 4.4 | 4.4 | |
| 120 | 13.8 | 13.6 | 13.6 | 9.0 | 8.6 | 8.6 | 6.6 | 6.6 | 6.6 | 4.4 | 4.4 | 4.2 |
| 125 | 13.8 | 13.6 | 13.6 | 9.0 | 8.6 | 8.6 | 6.6 | 6.6 | 6.6 | 4.4 | 4.4 | 4.2 |
| 130 | 13.4 | 13.4 | 13.6 | 9.0 | 8.6 | 8.6 | 6.6 | 6.6 | 6.6 | 4.4 | 4.4 | 4.2 |
| 135 | 13.0 | 13.0 | 13.2 | 9.0 | 8.6 | 8.6 | 6.6 | 6.6 | 6.6 | 4.4 | 4.4 | 4.2 |
| 140 | 12.6 | 12.6 | 12.8 | 9.0 | 8.6 | 8.6 | 6.6 | 6.6 | 6.6 | 4.4 | 4.4 | 4.2 |
| 145 | 12.2 | 12.2 | 12.4 | 9.0 | 8.6 | 8.6 | 6.6 | 6.6 | 6.6 | 4.4 | 4.4 | 4.2 |
| 150 | 11.8 | 11.8 | 12.0 | 9.0 | 8.6 | 8.6 | 6.6 | 6.6 | 6.6 | 4.4 | 4.4 | 4.2 |
| 155 | 11.4 | 11.2 | 11.6 | 9.0 | 8.6 | 8.6 | 6.6 | 6.6 | 6.6 | 4.4 | 4.4 | 4.2 |
| 160 | 10.8 | 10.8 | 11.2 | 9.0 | 8.6 | 8.6 | 6.6 | 6.6 | 6.6 | 4.4 | 4.4 | 4.2 |
| 165 | 10.2 | 10.4 | 10.8 | 9.0 | 8.6 | 8.6 | 6.6 | 6.6 | 6.4 | 4.4 | 4.4 | 4.2 |
| 170 | 9.8 | 9.8 | 10.2 | 8.8 | 8.6 | 8.6 | 6.6 | 6.6 | 6.4 | 4.4 | 4.2 | 4.2 |
| 175 | 9.2 | 9.4 | 9.8 | 8.4 | 8.6 | 8.6 | 6.6 | 6.4 | 6.4 | 4.4 | 4.2 | 4.2 |
| 180 | 8.6 | 8.8 | 9.4 | 8.2 | 8.4 | 8.4 | 6.4 | 6.2 | 6.2 | 4.2 | 4.2 | 4.2 |
| 185 | 8.2 | 8.4 | 9.0 | 7.8 | 8.0 | 8.2 | 6.2 | 6.2 | 6.0 | 4.2 | 4.2 | 4.2 |
| 190 | 7.6 | 8.0 | 8.4 | 7.4 | 7.8 | 8.0 | 6.0 | 6.0 | 6.0 | 4.2 | 4.0 | 4.2 |
| 195 | 7.2 | 7.6 | 8.0 | 7.2 | 7.4 | 7.8 | 5.8 | 5.8 | 5.8 | 4.2 | 4.0 | 4.0 |
| 200 | 6.8 | 7.0 | 7.4 | 6.8 | 7.2 | 7.6 | 5.6 | 5.8 | 5.8 | 4.0 | 4.0 | 4.0 |
| 205 | 6.4 | 6.6 | | 6.4 | 6.8 | 7.4 | 6.4 | 5.6 | 5.6 | 4.0 | 4.0 | 4.0 |
| 210 | 6.0 | 6.2 | | 6.0 | 6.6 | 7.2 | 5.0 | 5.2 | 5.4 | 4.0 | 3.8 | 4.0 |
| 215 | 5.6 | 5.8 | | 5.8 | 6.2 | 6.8 | 4.8 | 5.0 | 5.2 | 3.8 | 3.8 | 4.0 |
| 220 | 5.2 | 5.4 | | 5.4 | 6.0 | 6.4 | 4.6 | 4.8 | 5.2 | 3.8 | 3.8 | 3.8 |
| 225 | 4.6 | 4.8 | | 5.0 | 5.6 | 6.0 | 4.4 | 4.6 | 5.0 | 3.4 | 3.6 | 3.8 |
| 230 | 4.0 | 4.2 | | 4.8 | 5.2 | | 4.0 | 4.4 | 4.8 | 3.2 | 3.4 | 3.6 |
| 235 | 3.4 | 3.6 | | 4.4 | 4.8 | | 3.8 | 4.2 | 4.6 | 3.0 | 3.2 | 3.4 |
| 240 | 2.8 | 3.0 | | 4.0 | 4.4 | | 3.6 | 4.0 | 4.2 | 2.8 | 3.2 | 3.4 |
| 245 | | 2.6 | | 3.6 | 4.0 | | 3.2 | 3.6 | 4.0 | 2.6 | 3.0 | 3.2 |
| 250 | | | | 3.2 | 3.6 | | 3.0 | 3.4 | | 2.4 | 2.8 | 3.0 |
| 255 | | | | 2.8 | 3.2 | | 2.6 | 3.0 | | 2.2 | 2.6 | 3.0 |
| 260 | | | | 2.2 | 2.6 | | | 2.6 | | | 2.4 | 2.6 |

236 ft. (72 m) | 43-72-98-125 ft. (13-22-30-38 m) | 154,300 lbs. (70mt) | 100% 27'11" Spread | 360°

Pounds (thousands)

| Feet | 43 FT 5°-20° | 43 FT 20°-40° | 72 FT 5°-20° | 72 FT 20°-40° | 98 FT 5°-20° | 98 FT 20°-40° | 125 FT 5°-20° | 125 FT 20°-40° |
|---|---|---|---|---|---|---|---|---|
| 55 | | | | | | | | |
| 60 | 13.2 | | | | | | | |
| 65 | 13.2 | | | | | | | |
| 70 | 13.2 | | | | | | | |
| 75 | 13.2 | 13.6 | | | | | | |
| 80 | 13.2 | 13.6 | 8.6 | | | | | |
| 85 | 13.2 | 13.6 | 8.6 | | | | | |
| 90 | 13.2 | 13.6 | 8.6 | | 6.6 | | | |
| 95 | 13.2 | 13.6 | 8.6 | | 6.6 | | 4.4 | |
| 100 | 13.2 | 13.6 | 8.6 | 8.2 | 6.6 | | 4.4 | |
| 105 | 13.2 | 13.6 | 8.6 | 8.2 | 6.6 | | 4.4 | |
| 110 | 13.2 | 13.6 | 8.6 | 8.2 | 6.6 | | 4.4 | |
| 115 | 13.2 | 13.6 | 8.6 | 8.2 | 6.6 | 6.6 | 4.4 | |
| 120 | 13.2 | 13.6 | 8.6 | 8.2 | 6.6 | 6.6 | 4.4 | 4.2 |
| 125 | 13.2 | 13.4 | 8.6 | 8.2 | 6.6 | 6.6 | 4.4 | 4.2 |
| 130 | 12.8 | 13.0 | 8.6 | 8.2 | 6.6 | 6.6 | 4.4 | 4.2 |
| 135 | 12.4 | 12.6 | 8.6 | 8.2 | 6.6 | 6.6 | 4.4 | 4.2 |
| 140 | 12.0 | 12.2 | 8.6 | 8.2 | 6.6 | 6.6 | 4.4 | 4.2 |
| 145 | 11.6 | 11.8 | 8.6 | 8.2 | 6.6 | 6.6 | 4.4 | 4.2 |
| 150 | 11.2 | 11.4 | 8.6 | 8.2 | 6.6 | 6.6 | 4.4 | 4.2 |
| 155 | 10.8 | 11.0 | 8.6 | 8.2 | 6.6 | 6.6 | 4.4 | 4.2 |
| 160 | 10.2 | 10.6 | 8.6 | 8.2 | 6.6 | 6.6 | 4.4 | 4.2 |
| 165 | 9.8 | 10.2 | 8.4 | 8.2 | 6.6 | 6.4 | 4.4 | 4.2 |
| 170 | 9.4 | 9.8 | 8.4 | 8.2 | 6.6 | 6.4 | 4.2 | 4.2 |
| 175 | 9.0 | 9.4 | 8.2 | 8.2 | 6.4 | 6.4 | 4.2 | 4.2 |
| 180 | 8.4 | 9.0 | 8.0 | 8.0 | 6.2 | 6.2 | 4.2 | 4.2 |
| 185 | 8.0 | 8.4 | 7.6 | 7.8 | 6.2 | 6.0 | 4.2 | 4.2 |
| 190 | 7.6 | 8.0 | 7.4 | 7.6 | 6.0 | 6.0 | 4.0 | 4.2 |
| 195 | 7.2 | 7.6 | 7.2 | 7.4 | 5.8 | 5.8 | 4.0 | 4.0 |
| 200 | 6.8 | 7.0 | 6.8 | 7.2 | 5.8 | 5.8 | 4.0 | 4.0 |
| 205 | 6.4 | | 6.6 | 7.0 | 5.6 | 5.6 | 4.0 | 4.0 |
| 210 | 5.8 | | 6.2 | 6.8 | 5.2 | 5.4 | 3.8 | 4.0 |
| 215 | 5.2 | | 6.0 | 6.4 | 5.0 | 5.2 | 3.8 | 4.0 |
| 220 | 4.6 | | 5.6 | 6.0 | 4.8 | 5.2 | 3.8 | 3.8 |
| 225 | 4.2 | | 5.2 | 5.6 | 4.6 | 5.0 | 3.6 | 3.8 |
| 230 | 3.6 | | 4.8 | | 4.4 | 4.8 | 3.4 | 3.6 |
| 235 | 3.2 | | 4.4 | | 4.2 | 4.6 | 3.2 | 3.4 |
| 240 | 2.6 | | 3.8 | | 3.8 | 4.2 | 3.2 | 3.4 |
| 245 | 2.2 | | 3.4 | | 3.4 | 4.0 | 3.0 | 3.2 |
| 250 | | | 3.0 | | 3.0 | | 2.8 | 3.0 |
| 255 | | | 2.4 | | 2.6 | | 2.4 | 3.0 |
| 260 | | | | | | | | 2.6 |
| 265 | | | | | | | | |

THIS CHART IS ONLY A GUIDE AND SHOULD NOT BE USED TO OPERATE THE CRANE. The individual crane's load chart, operating instructions and other instructional plates must be read and understood prior to operating the crane.

# load charts



236 ft. (72 m) | 43-72-98-125 ft. (13-22-30-38 m) | 97,000 lbs. (70mt) | 100% 27'11" Spread | 360°

Pounds (thousands)

| Feet | 43 FT 5° | 43 FT 20° | 43 FT 40° | 72 FT 5° | 72 FT 20° | 72 FT 40° | 98 FT 5° | 98 FT 20° | 98 FT 40° | 125 FT 5° | 125 FT 20° | 125 FT 40° |
|---|---|---|---|---|---|---|---|---|---|---|---|---|
| 50 | 13.8 | | | | | | | | | | | |
| 55 | 13.8 | | | | | | | | | | | |
| 60 | 13.8 | 13.6 | | 9.0 | | | | | | | | |
| 65 | 13.8 | 13.6 | | 9.0 | | | | | | | | |
| 70 | 13.8 | 13.6 | | 9.0 | | | 6.6 | | | | | |
| 75 | 13.8 | 13.6 | 13.6 | 9.0 | | | 6.6 | | | 4.4 | | |
| 80 | 13.8 | 13.6 | 13.6 | 9.0 | 8.6 | | 8.6 | | | 4.4 | | |
| 85 | 13.8 | 13.6 | 13.6 | 9.0 | 8.6 | | 6.6 | | | 4.4 | | |
| 90 | 13.8 | 13.6 | 13.6 | 9.0 | 8.6 | | 6.6 | 6.6 | | 4.4 | | |
| 95 | 13.8 | 13.6 | 13.6 | 9.0 | 8.6 | | 6.6 | 6.6 | | 4.4 | 4.4 | |
| 100 | 13.8 | 13.6 | 13.6 | 9.0 | 8.6 | 8.6 | 6.6 | 6.6 | | 4.4 | 4.4 | |
| 105 | 13.8 | 13.6 | 13.6 | 9.0 | 8.6 | 8.6 | 6.6 | 6.6 | | 4.4 | 4.4 | |
| 110 | 13.8 | 13.6 | 13.6 | 9.0 | 8.6 | 8.6 | 6.6 | 6.6 | | 4.4 | 4.4 | |
| 115 | 13.8 | 13.6 | 13.6 | 9.0 | 8.6 | 8.6 | 6.6 | 6.6 | 6.6 | 4.4 | 4.4 | |
| 120 | 13.8 | 13.6 | 13.6 | 9.0 | 8.6 | 8.6 | 6.6 | 6.6 | 6.6 | 4.4 | 4.4 | 4.2 |
| 125 | 13.8 | 13.6 | 13.6 | 9.0 | 8.6 | 8.6 | 6.6 | 6.6 | 6.6 | 4.4 | 4.4 | 4.2 |
| 130 | 12.6 | 13.4 | 13.6 | 9.0 | 86 | 8.6 | 6.6 | 6.6 | 6.6 | 4.4 | 4.4 | 4.2 |
| 135 | 11.4 | 12.4 | 13.2 | 9.0 | 8.6 | 8.6 | 6.6 | 6.6 | 6.6 | 4.4 | 4.4 | 4.2 |
| 140 | 10.2 | 11.2 | 12.0 | 9.0 | 8.6 | 8.6 | 6.6 | 6.6 | 6.6 | 4.4 | 4.4 | 4.2 |
| 145 | 9.2 | 10.0 | 10.8 | 9.0 | 8.6 | 8.6 | 6.6 | 6.6 | 6.6 | 4.4 | 4.4 | 4.2 |
| 150 | 8.2 | 9.0 | 9.8 | 9.0 | 8.6 | 8.6 | 6.6 | 6.6 | 6.6 | 4.4 | 4.4 | 4.2 |
| 155 | 7.2 | 8.0 | 8.6 | 8.6 | 8.6 | 8.6 | 6.6 | 6.6 | 6.6 | 4.4 | 4.4 | 4.2 |
| 160 | 6.4 | 7.2 | 7.8 | 7.8 | 8.6 | 8.6 | 6.6 | 6.6 | 6.6 | 4.4 | 4.4 | 4.2 |
| 165 | 5.6 | 6.2 | 6.8 | 7.0 | 8.2 | 8.6 | 6.6 | 6.6 | 6.4 | 4.4 | 4.4 | 4.2 |
| 170 | 4.8 | 5.4 | 6.0 | 6.2 | 7.4 | 8.6 | 6.0 | 6.6 | 6.4 | 4.4 | 4.2 | 4.2 |
| 175 | 4.2 | 4.6 | 5.2 | 5.4 | 6.6 | 7.8 | 5.2 | 6.4 | 6.4 | 4.4 | 4.2 | 4.2 |
| 180 | 3.4 | 4.0 | 4.4 | 4.8 | 5.8 | 7.0 | 4.6 | 5.8 | 6.2 | 4.2 | 4.2 | 4.2 |
| 185 | 2.8 | 3.2 | 3.6 | 4.0 | 5.2 | 6.2 | 3.8 | 5.0 | 6.0 | 3.6 | 4.2 | 4.2 |
| 190 | 2.2 | 2.6 | 3.0 | 3.4 | 4.4 | 5.4 | 3.2 | 4.4 | 5.4 | 3.0 | 4.0 | 4.2 |
| 195 | | | 2.4 | 2.8 | 3.8 | 4.6 | 2.6 | 3.8 | 4.6 | 2.4 | 3.4 | 4.0 |
| 200 | | | | 2.2 | 3.2 | 4.0 | | 3.0 | 4.0 | | 2.8 | 3.8 |
| 205 | | | | | 2.6 | 3.4 | | 2.6 | 3.4 | | 2.2 | 3.2 |
| 210 | | | | | | 2.8 | | | 2.8 | | | 2.6 |
| 215 | | | | | | | | | 2.2 | | | |

236 ft. (72 m) | 43-72-98-125 ft. (13-22-30-38 m) | 97,000 lbs. (70mt) | 100% 27'11" Spread | 360°

Pounds (thousands)

| Feet | 43 FT 5°-20° | 43 FT 20°-40° | 72 FT 5°-20° | 72 FT 20°-40° | 98 FT 5°-20° | 98 FT 20°-40° | 125 FT 5°-20° | 125 FT 20°-40° |
|---|---|---|---|---|---|---|---|---|
| 55 | | | | | | | | |
| 60 | 13.2 | | | | | | | |
| 65 | 13.2 | | | | | | | |
| 70 | 13.2 | | | | | | | |
| 75 | 13.2 | 13.6 | | | | | | |
| 80 | 13.2 | 13.6 | 8.6 | | | | | |
| 85 | 13.2 | 13.6 | 8.6 | | | | | |
| 90 | 13.2 | 13.6 | 8.6 | | 6.6 | | | |
| 95 | 13.2 | 13.6 | 8.6 | | 6.6 | | 4.4 | |
| 100 | 13.2 | 13.6 | 8.6 | 8.2 | 6.6 | | 4.4 | |
| 105 | 13.2 | 13.6 | 8.6 | 8.2 | 6.6 | | 4.4 | |
| 110 | 13.2 | 13.6 | 8.6 | 8.2 | 6.6 | | 4.4 | |
| 115 | 13.2 | 13.6 | 8.6 | 8.2 | 6.6 | 6.6 | 4.4 | |
| 120 | 13.2 | 13.6 | 8.6 | 8.2 | 6.6 | 6.6 | 4.4 | 4.2 |
| 125 | 13.2 | 13.4 | 8.6 | 8.2 | 6.6 | 6.6 | 4.4 | 4.2 |
| 130 | 12.6 | 13.0 | 8.6 | 8.2 | 6.6 | 6.6 | 4.4 | 4.2 |
| 135 | 11.4 | 12.6 | 8.6 | 8.2 | 6.6 | 6.6 | 4.4 | 4.2 |
| 140 | 10.2 | 11.8 | 8.6 | 8.2 | 6.6 | 6.6 | 4.4 | 4.2 |
| 145 | 9.2 | 10.8 | 8.6 | 8.2 | 6.6 | 6.6 | 4.4 | 4.2 |
| 150 | 8.2 | 9.8 | 8.6 | 8.2 | 6.6 | 6.6 | 4.4 | 4.2 |
| 155 | 7.2 | 8.8 | 8.6 | 8.2 | 6.6 | 6.6 | 4.4 | 4.2 |
| 160 | 6.4 | 7.8 | 7.8 | 8.2 | 6.6 | 6.6 | 4.4 | 4.2 |
| 165 | 5.6 | 6.8 | 7.0 | 8.2 | 6.6 | 6.4 | 4.4 | 4.2 |
| 170 | 4.8 | 6.0 | 6.2 | 7.4 | 6.0 | 6.4 | 4.2 | 4.2 |
| 175 | 4.2 | 5.2 | 5.4 | 6.6 | 5.2 | 6.4 | 4.2 | 4.2 |
| 180 | 3.4 | 4.4 | 4.8 | 5.8 | 4.6 | 5.8 | 4.2 | 4.2 |
| 185 | 2.8 | 3.8 | 4.0 | 5.2 | 3.8 | 5.0 | 3.6 | 4.2 |
| 190 | | 3.2 | 3.4 | 4.4 | 3.2 | 4.4 | 3.0 | 4.0 |
| 195 | | 2.4 | 2.8 | 3.8 | 2.6 | 3.8 | 2.4 | 3.4 |
| 200 | | | 2.2 | 3.2 | | 3.0 | | 2.8 |
| 205 | | | | 2.6 | | 2.6 | | 2.2 |





THIS CHART IS ONLY A GUIDE AND SHOULD NOT BE USED TO OPERATE THE CRANE. The individual crane's load chart, operating instructions and other instructional plates must be read and understood prior to operating the crane.

# boom extension configurations



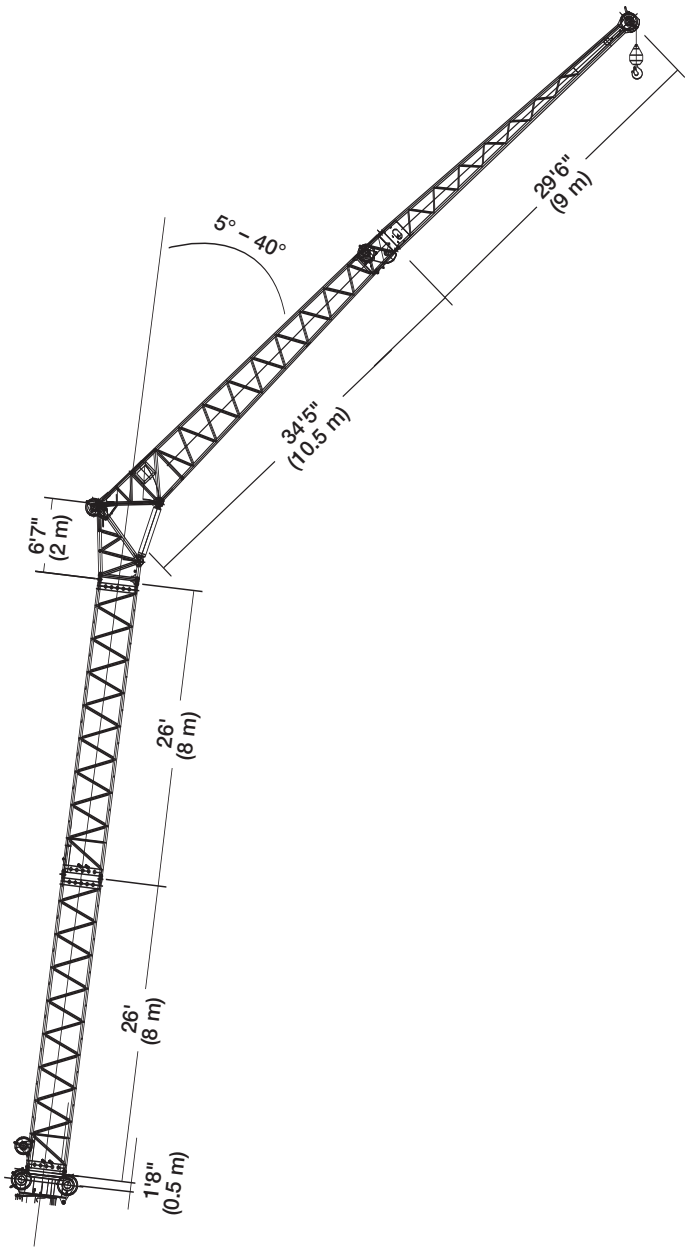


| Length (ft.) | Intermediate section boom extension make-up | | | |
|---|---|---|---|---|
| | 26' (8 m) | 6'7" (2 m) | 34'5" (10.5 m) | 29'6" (9 m) |
| 43 | — | 1x | 1x | — |
| 72 | — | 1x | 1x | 1x |
| 98 | 1x | 1x | 1x | 1x |
| 125 | 2x | 1x | 1x | 1x |



THIS CHART IS ONLY A GUIDE AND SHOULD NOT BE USED TO OPERATE THE CRANE. The individual crane's load chart, operating instructions and other instructional plates must be read and understood prior to operating the crane.

# rated lifting capacities



**IMPORTANT NOTES:**

**WARNING: THIS CHART IS ONLY A GUIDE.**

**The notes below are for illustration only and should not be relied upon to operate the crane. The individual crane's load chart, operating instructions and other instruction plates must be read and understood prior to operating the crane.**

1. All rated loads up to 420,000 pounds meet ANSI/ASME B30.5, Mobile and Locomotive Cranes. Testing and development were performed to SAEJ1063, Cantilevered Boom Crane Structures - Method of Test and SAEJ765 Crane Stability Test Code.

2. Capacities given do not include the weight of hook blocks, slings, auxiliary lifting equipment and load handling devices. Their weights must be added to the load to be lifted. When more than minimum required reeving is used, the additional rope weight shall be considered part of the load.

3. The machine shall be leveled on a firm supporting surface. Depending on the nature of the supporting surface, it may be necessary to have structural supports under the outrigger floats to spread the load to a larger bearing surface.

4. When either boom length or radius or both are between values listed, the smallest load shown at either the next larger radius or next longer or shorter boom length shall be used.

5. For outrigger operation, outriggers shall be properly extended with tires raised off the ground before operating the boom or lifting loads.

## *† Comparative Rating*

A rating designation based upon the premise that large capacity European cranes are typically purchased and used as long boom, high reach, long radius lift cranes, not as heavy lift cranes.

To provide a GMK 6250-L crane with the necessary equipment to achieve maximum lift capacity will drastically reduce long boom performance. Therefore, augmenting lifting equipment is required for buyers who require such capacities.

## Symbols Glossary

Frame

Steering

Outriggers

Transmission

Outrigger Controls

Axles

Engine

Brakes

Fuel Tank Capacity

Tires

Electrical System

Suspension

Drive

Rotation

Lights

Boom Elevation

Cab

Swing

Boom

Counterweight

Fixed Swingaway

Oil

Tele-Swingaway

Hydraulic System

Lattice Extension (Luffing)

Hoist

Boom Nose

Radius

Boom Extension

Boom Length

Speed

Hookblock

Grade

Gear

Lattice Extension

Luffing Jib

# notes

GROVE

## Regional Headquarters

**Americas**

Manitowoc, Wisconsin, USA
Tel: +1 920 684 6621
Fax: +1 920 683 6278

Shady Grove, Pennsylvania, USA
Tel: +1 717 597 8121
Fax: +1 717 597 4062

**Europe, Middle East, Africa**

Ecully, France
Tel: +33 472 18 2020
Fax: +33 472 18 2000

**Asia – Pacific**

Shanghai, China
Tel: +86 21 51113579
Fax: +86 21 51113578

Singapore
Tel: +65 6264 1188
Fax: +65 6862 4142

## Regional Offices

**Americas**

**Brazil**
Alphaville
Tel: +55 11 4688 2716
Fax: +55 11 4191 1471

**Mexico**
Monterrey
Tel: +52 81 8124 0128
Fax: +52 81 8124 0129

**Europe, Middle East, Africa**

**Algeria**
Hydra
Tel: +21 3 21 48 1173
Fax: +21 3 21 48 1454

**Czeck Republic**
Netvorice
Tel: +420 317 78 9313
Fax: +420 317 78 9314

**France**
Baudemont
Tel: +33 385 28 2589
Fax: +33 385 28 0430

Cergy
Tel: +33 130 31 3150
Fax: +33 130 38 6085

Decines
Tel: +33 472 81 5000
Fax: +33 472 81 5010

**Germany**
Langenfeld
Tel: +49 21 73 8909-0
Fax: +49 21 73 8909 30

**Hungary**
Budapest
Tel: +36 13 39 8622
Fax: +36 13 39 8622

**Italy**
Parabiago
Tel: +390 331 49 3311
Fax: +390 331 49 3330

**Netherlands**
Breda
Tel: +31 76 578 3999
Fax: +31 76 578 3978

**Poland**
Warsaw
Tel: +48 22 843 3824
Fax: +48 22 843 3471

**Portugal**
Alfena
Tel: +351 229 69 8840
Fax: +351 229 69 8848

Lisbon
Tel: +351 212 109 340
Fax: +351 212 109 349

**Russia**
Moscow
Tel: +7 495 641 2359
Fax: +7 495 641 2358

**U.A.E.**
Dubai
Tel: +971 4 3381 861
Fax: +971 4 3382 343

**U. K.**
Middlesex
Tel: +44 1 895 43 0053
Fax: +44 1 895 45 9500

Sunderland
Tel: +44 191 522 2000
Fax: +44 191 522 2052

**Asia – Pacific**

**Australia**
Melbourne
Tel: +61 3 9 336 1300
Fax: +61 3 9 336 1322

Sydney
Tel: +61 2 9 896 4433
Fax: +61 2 9 896 3122

**China**
Beijing
Tel: +86 10 58674761
Fax: +86 10 58674760

Xi'an
Tel: +86 29 87891465
Fax: +86 29 87884504

**Korea**
Seoul
Tel: +82 2 508 3361
Fax: +82 2 508 3365

**Philippines**
Makati City
Tel: +63 2 844 9437
Fax: +63 2 844 4712

**Factories**

U.S.A.
Manitowoc
Shady Grove

Brazil
Alphaville

France
Charlieu
La Clayette
Moulins

India
Calcutta
Puna

Italy
Niella Tanaro

Germany
Wilhelmshaven

Portugal
Fânzeres

China
Zhangjiagang

Manitowoc Crane Group

www.manitowoccranegroup.com

Constant improvement and engineering progress make it necessary that we reserve the right to make specification, equipment and price changes without notice. Illustrations shown may include optional equipment and accessories, and may not include all standard equipment.

©2007 MANITOWOC Printed in USA Form No. GMK6250-L Part No. 02-371 / 0507 / 2M

# Attachment 6: Lifting instructions presses and support structure

**Boskalis Dolman BV**
**www.boskalisdolman.nl**

**Hoisting instructions for filter press construction:**

- **Use always the four (4) hoisting points marked yellow/black situated on upper beams**
- **If not already done dismount the four (4) cover plates in order to get access for fitting the slings**
- **Use always proper hoisting equipment**
- **See further pictures below**

**Description**
**Type: Filter press constructions**
**Marks: N.M. Heilig 11057-100 (200-300-400)**
**Dimensions: LxWxH 16700x2200x2930 mm**
**Weight: 34 tonnes (metric)**

For more information please contact dolman@boskalis.nl

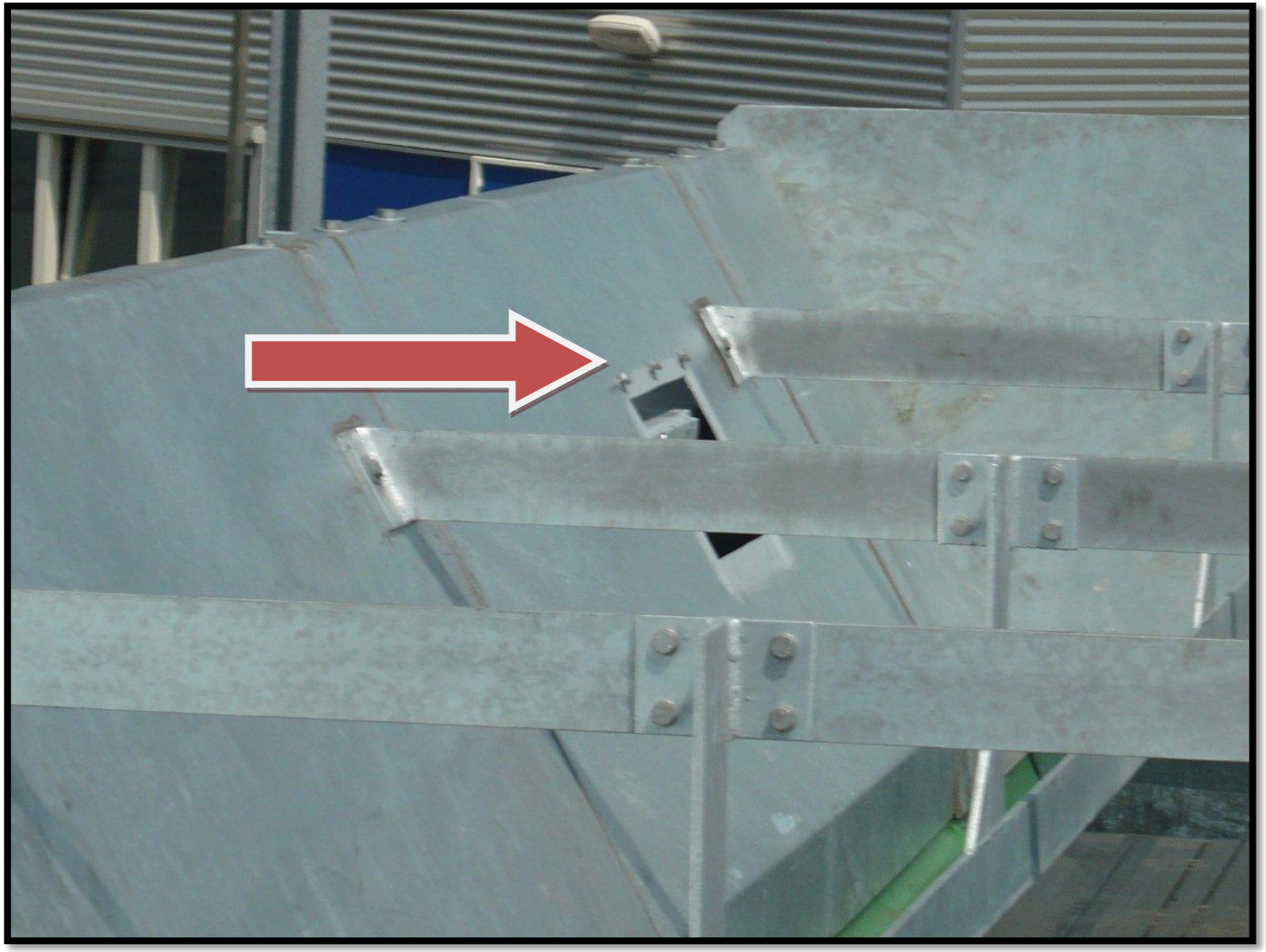

**During transport cover plates (qty 4) must be removed in order to get access for fitting the slings**

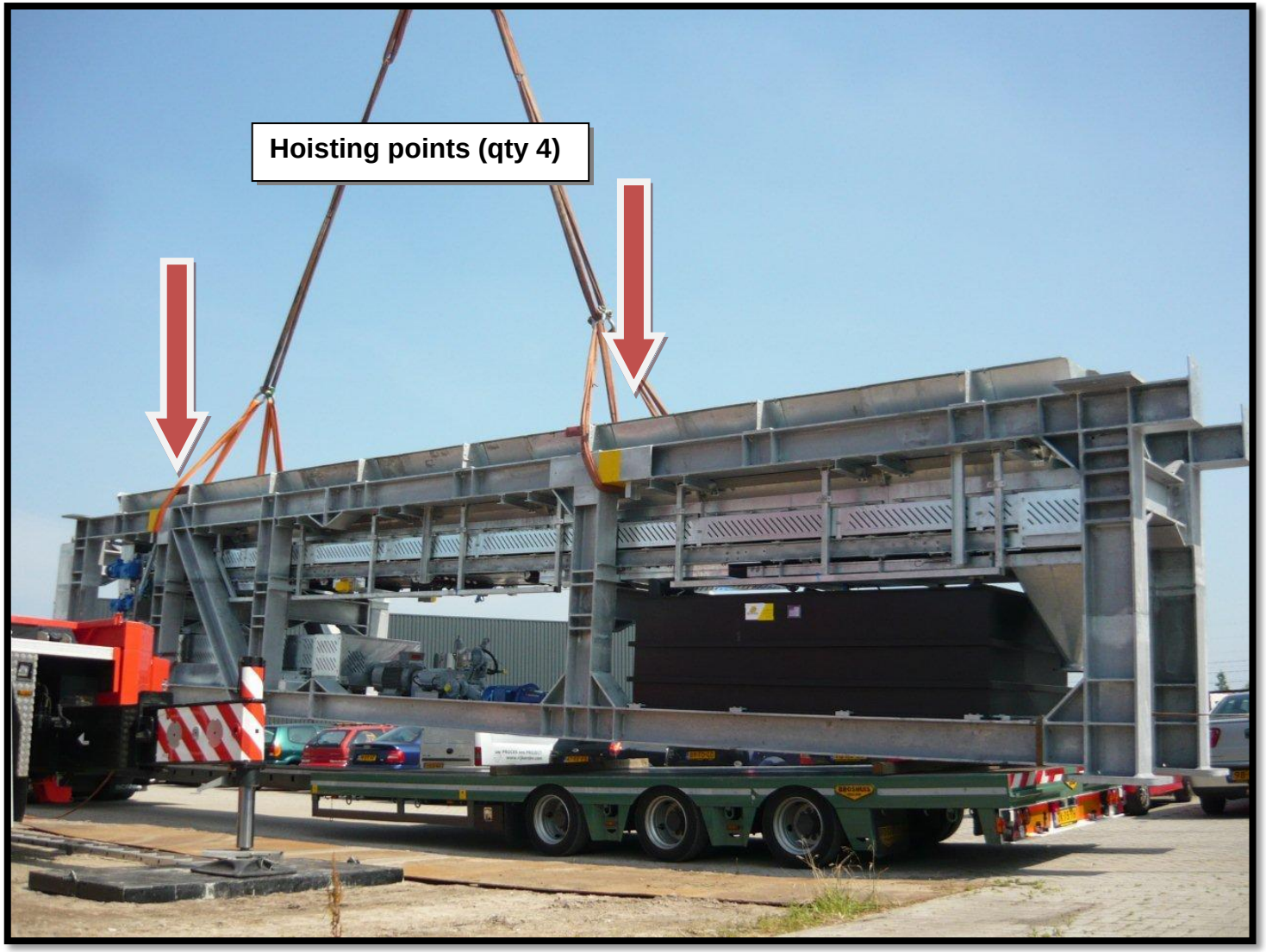


**Hoisting point have been marked with yellow/black stripes (not shown on these pictures!)**

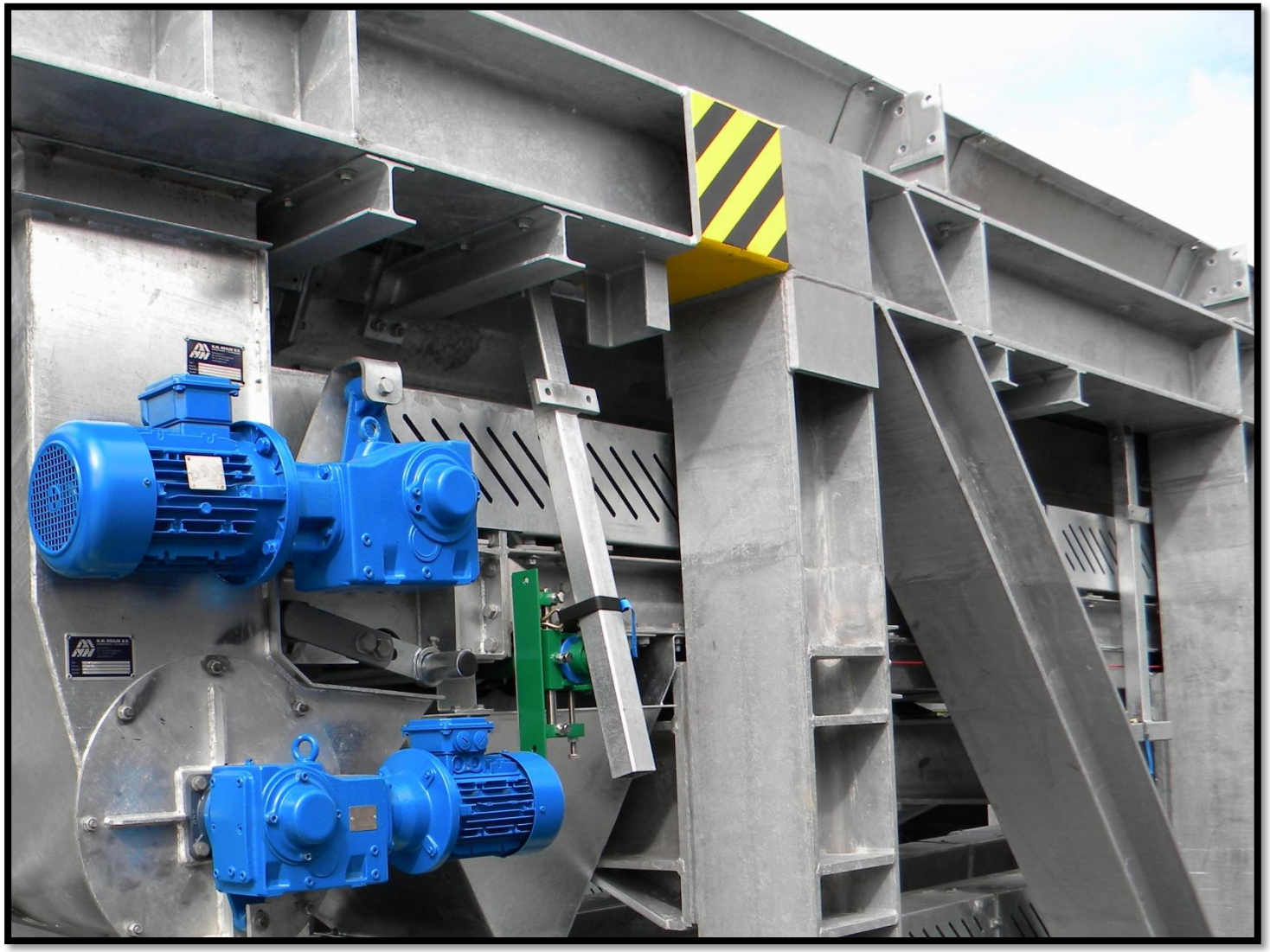

**Detail of hoisting point. All hoisting points are marked yellow/black**

### 3.4.2 Instructions for filter model GHT 1500 positioning.

*WARNING*

***The model GHT 1500, when possible, is dispatched completely assembled, therefore all the positioning operations will be evidently simplified.***

Inside the main beams are found two plates having a suitable section to support the entire assembled filter, in order that it could be lifted and positioned with a single operation.

It is necessary to use a crane, or if the case, two cranes with adequate carrying capacity, to hook the machine in two holes diameter 60 mm drilled in the above mentioned plates.

The diagram of figure 3-3 shows the filter model GHT 1500 lifting by using 1 crane.

*WARNING*

***Figure 3-3 shows the longest GHT 1500 Filter Press configuration (P-13), that weighs about 44-46 tons. For the shorter models, the overall weight is reduced of about 2 tons every meter of frame. See table 3-1***

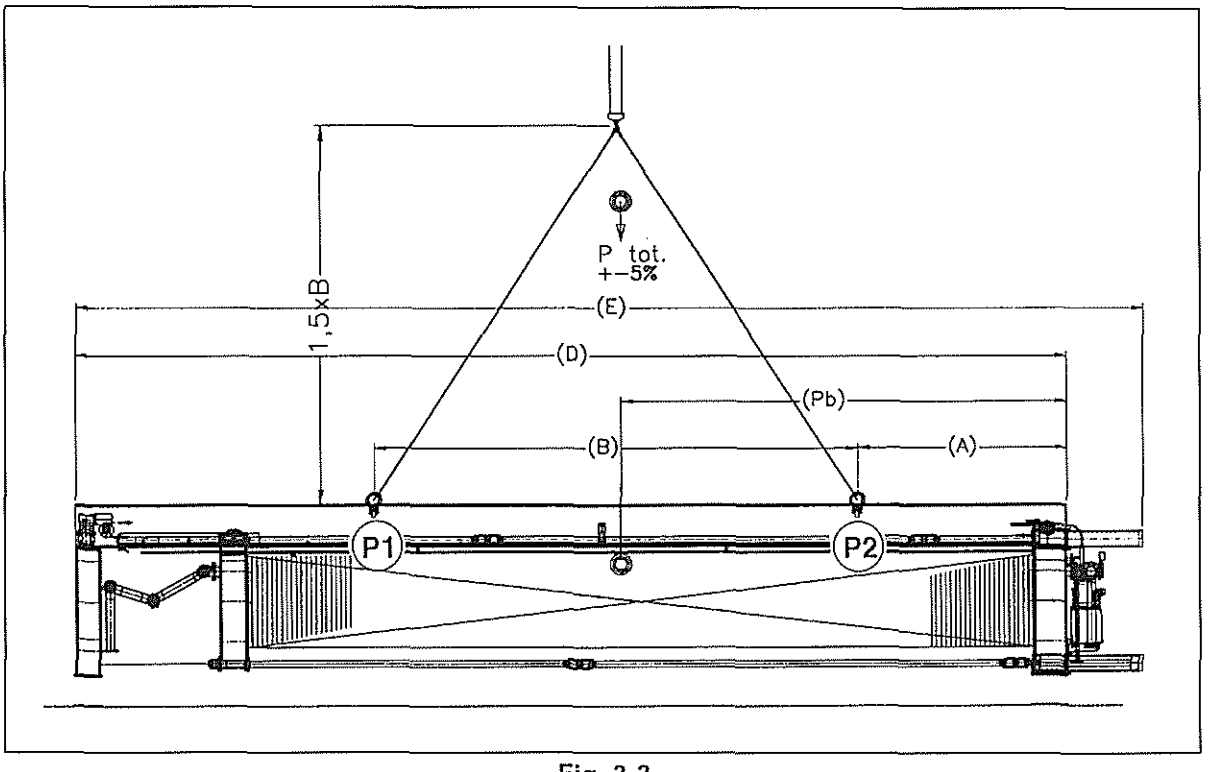


Fig. 3-3

Continues...

The diagram of figure 3-4 shows the filter model GHT 1500 lifting by using 2 cranes.

***WARNING***

***Figure 3-4 shows the longest GHT 1500 Filter Press configuration (P-13), that weighs about 44-46 tons. For the shorter models, the overall weight is reduced of about 2 tons every meter of frame. See table 3-1***

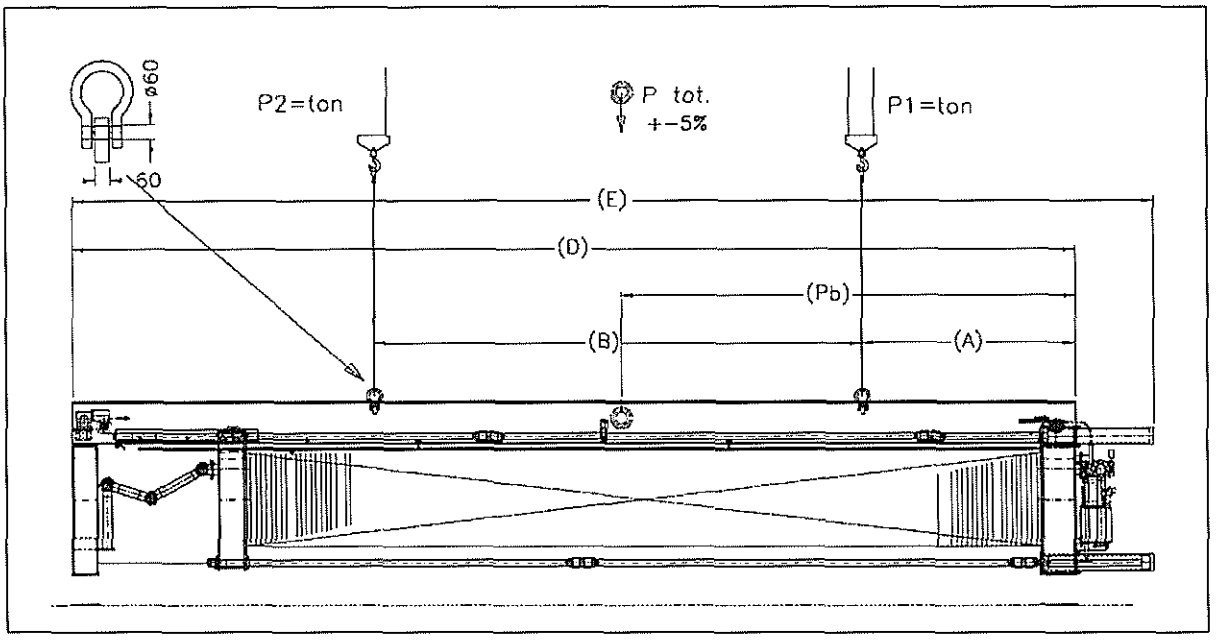


Fig. 3-4

| | A | B | Pb | D | E | P (ton) | P1 = P2 (ton) |
|---|---|---|---|---|---|---|---|
| Frame | | | | | | | |
| P13 | 3000 | 8200 | 7100 | 16175 | 17450 | 46 | 23 |
| P12 | 2875 | 7450 | 6600 | 15175 | 16450 | 43 | 21.5 |
| P11 | 2350 | 7500 | 6100 | 14175 | 15450 | 41 | 20.5 |
| P10 | 2000 | 7200 | 5600 | 13175 | 14450 | 38 | 19 |
| P9 | 1800 | 6550 | 5100 | 12175 | 13450 | 36 | 18 |
| P8 | 1350 | 6600 | 4650 | 11175 | 12450 | 34 | 17 |
| P7 | 1240 | 5800 | 4140 | 10175 | 11450 | 31 | 15.5 |

Tab. 3-1

ARCADIS SUBMITTAL # CD-FIO-011

CleanHarbors
ENVIRONMENTAL SERVICES®

42 Longwater Drive, Norwell, MA 02061
(781) 385-9813
Lis.Justin@cleanharbors.com
www.cleanharbors.com

# Project Submittal

**Project Name:** Lower Passaic River Phase I Sediment Removal Action

February 11, 2012

**Engineer:** Rob Romagnoli, (QCA) Engineer of Record (ARCADIS) **Address:** 6723 Towpath Road, Syracuse, NY 13214

**Subcontractor:** **Address:**

**Manufacturer:** NIBCO Inc **Address:** 1516 Middlebury street, Stelkhart, IN 46516

**Supplier:** Raritan Pipe and Supply Co. **Address:** 301 Meadow Road, Edison, NJ 08817

**Submittal: FIO-027-R1** **Specification/Drawing Reference:** M-15

| Transmittal Record | Attention | Sent | Received | Due | Quantity | Received |
|---|---|---|---|---|---|---|
| Contractor to Engineer | Rob Romagnoli (QCA)<br>Scott Murphy (TM) | 02/11/12 | | NA | 1 | |
| Engineer to Contractor | Justin Lis | | | | | |

**Review Action Code:** 1. Reviewed/No exception taken 2. Make corrections noted 3. Revise as noted and resubmit 4. Incomplete submittal, resubmit 5. Rejected. Resubmit as specified

| 1 | 2 | 3 | 4 | 5 | Drawing/Item | Dated | Description |
|---|---|---|---|---|---|---|---|
| | | | | | 1 | 02/11/12 | Storm Water Pumping Station Gate and Check Valve Specifications – to be installed at the |
| | | | | | - | - | UPF. |
| | | | | | 2 | 02/11/12 | Arcadis Sketch of Revised Storm Water Header – to be installed at the UPF. |
| | | | | | | | |
| | | | | | | | |
| | | | | | | | |
| | | | | | | | |
| | | | | | | | |
| | | | | | | | |
| | | | | | | | |

**COMMENTS:**

Clean Harbors will utilize (3) 8" Gate valves, (3) 8" Check valves, 8" Sch-80 PVC pipe and 8" Sch-80 PVC Tees, 90's and flanges to construct and connect the storm water pumping station to the storm water processing piping already installed on the water treatment facility. The support structure, for the header, will be constructed with pressure treated 4x4's, unistrut and steel clamps.

Authorized Reviewer: Justin Lis Date: 2/11/12

Notations do not authorize changes to contract sum or time. If you are authorized to proceed with the work identified in this submittal, it is assumed that no change in the contract amount or completion date is required. If a change in the work affecting your contract amount or completion is involved, notify the CM immediately.

*"People and Technology Protecting and Restoring America's Environment"*

# Class 125 Iron Body Gate Valves

Bolted Bonnet • Outside Screw and Yoke • Solid Wedge • Bronze Mounted

**125 PSI/8.6 Bar Saturated Steam to 353º F/178º C**
**200 PSI/13.8 Bar Non-Shock Cold Working Pressure to -20º F to 150º F/-29º C to 66º C◆**

CONFORMS TO MSS SP-70

**F-617-O**
Flanged

**T-617-O**
Threaded

## MATERIAL LIST

| PART | SPECIFICATION |
|---|---|
| 1. Stem | Brass ASTM B 16 Alloy C36000 |
| 2. Handwheel Nut | Cast Bronze ASTM B 584 Alloy C84400 |
| 3. Identification Plate | Aluminum |
| 4. Yoke Bushing | Cast Bronze ASTM B 584 Alloy C84400 |
| 5. Handwheel | Cast Iron ASTM A 126 Class B |
| 6. Bonnet Cap Nut | Steel ASTM A 307 |
| 7. Bonnet Cap | Cast Iron ASTM A 126 Class B or Ductile Iron ASTM A 536 |
| 8.[1] Bonnet | Cast Iron ASTM A 126 Class B |
| 9. Bonnet Cap Bolt | Steel ASTM A 307 |
| 10. Gland Follower Nut | Brass ASTM B 16 Alloy C36000 |
| 11. Gland Follower | Cast Iron ASTM A 126 Class B or Ductile Iron ASTM A 536 |
| 12. Packing Gland | Zinc Plated Powdered Iron ASTM B 783 or Brass ASTM B 16 Alloy C36000 |
| 13. Packing | Synthetic Fibers with Graphite |
| 14. Gland Follower Bolt | Steel ASTM A 307 |
| 15. Backseat Bushing | Cast Bronze ASTM B 584 Alloy C84400 |
| 16. Body Nut | Steel ASTM A 307 |
| 17. Body Bolt | Steel ASTM A 307 |
| 18. Wedge Pin | Silicon Bronze ASTM B 371 Alloy C69400 (10" & 12") or B 140 Alloy C31600 (2"–8") |
| 19. Body | Cast Iron ASTM A 126 Class B |
| 20. Seat Ring | Cast Bronze ASTM B 584 Alloy C84400 |
| 21. Wedge Face Ring | Cast Bronze ASTM B 584 Alloy C84400 |
| 22.[2] Wedge | Cast Iron ASTM A 126 Class B |
| 23. Body Gasket | Synthetic Fibers |
| 24. Stem Collar | Brass ASTM B 16 Alloy C36000 |

**1 Sizes thru 8" made with Yoke Integral with Bonnet. 10" and 12" sizes made with separate Yoke Bolted to Bonnet.**

**2 Sizes 2" thru 6" are all Bronze Wedges. Sizes 8" thru 12" made with Cast Iron Wedge with Bronze Wedge Face Rings.**

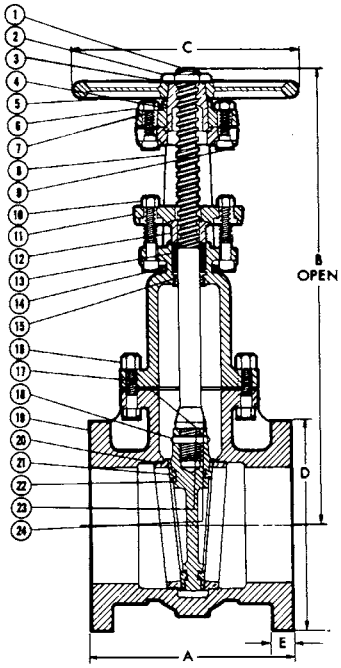


**F-617-O**
Flg x Flg

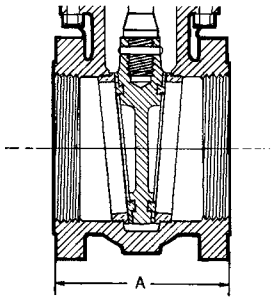


**T-617-O**
NPT x NPT

## DIMENSIONS—WEIGHTS—QUANTITIES

| Size | | Dimensions F-617-O A | | Dimensions T-617-O A | | B | | C | | D | | E | | F-617-O | | T-617-O | |
|---|---|---|---|---|---|---|---|---|---|---|---|---|---|---|---|---|---|
| In. | mm. | In. | mm. | In. | mm. | In. | mm. | In. | mm. | In. | mm. | In. | mm. | Lbs. | Kg. | Lbs. | Kg. |
| 2 | 50 | 7.00 | 178 | 5.63 | 143 | 16.31 | 414 | 8 | 203 | 6.00 | 152 | .63 | 16 | 41 | 19 | 30 | 14 |
| 2½ | 65 | 7.50 | 191 | 5.88 | 149 | 17.19 | 437 | 8 | 203 | 7.00 | 178 | .69 | 17 | 55 | 25 | 39 | 18 |
| 3 | 80 | 8.00 | 203 | 6.13 | 156 | 19.50 | 495 | 8 | 203 | 7.50 | 191 | .75 | 19 | 67 | 30 | 47 | 21 |
| 4 | 100 | 9.00 | 229 | 6.50 | 165 | 24.00 | 610 | 10 | 254 | 9.00 | 229 | .94 | 24 | 107 | 48 | 77 | 35 |
| 5 | 125 | 10.00 | 254 | x | x | 27.13 | 689 | 10 | 254 | 10.00 | 254 | .94 | 24 | 145 | 66 | x | x |
| 6 | 150 | 10.50 | 267 | x | x | 31.06 | 789 | 12 | 305 | 11.00 | 279 | 1.00 | 25 | 178 | 81 | x | x |
| 8 | 200 | 11.50 | 292 | x | x | 40.19 | 1021 | 14 | 356 | 13.50 | 343 | 1.13 | 29 | 309 | 140 | x | x |
| 10 | 250 | 13.00 | 330 | x | x | 48.25 | 1226 | 16 | 406 | 16.00 | 406 | 1.19 | 30 | 481 | 218 | x | x |
| 12 | 300 | 14.00 | 356 | x | x | 56.88 | 1445 | 18 | 457 | 19.00 | 483 | 1.25 | 32 | 706 | 320 | x | x |

**x Not available this size.**

**FREEZING WEATHER PRECAUTION: Subsequent to testing a piping system, valves should be left in an open position to allow complete drainage.**

**Position indicators available, see page 95.**

**◆For detailed Operating Pressure, refer to Pressure Temperature Chart on page 111.**

Part No : 4423-080 VALVES

Desc. : 8" - VALVE (CHKSWNG-FLNG-EPDM)

Disc. Code :110

Est'd Weight : 66.55 lbs or 30.21 Kg

Color : GRAY

Material : PVC

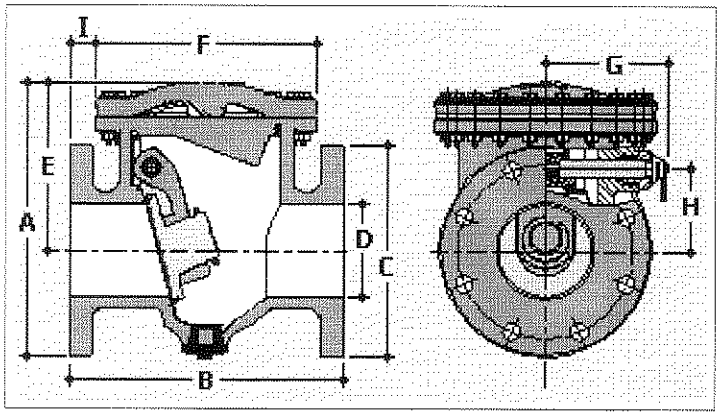


Cv Value = 1900.00

| | | |
|---|---|---|
| A = 19.125" | B = 19.719" | C = 13.500" |
| D = 7.875" | E = 11.625" | F = 16.313" |
| G = 7.000" | H = 6.500" | I = 1.156" |

The information printed here is based on current information & product design at the time of publication and is subject to change without notification. Spears® ongoing commitment to product improvement may result in some variation. No representation, guarantees or warranties of any kind are as to its accuracy, suitability for particular application or results to be obtained thereform. For verification of technical data or additional information, please contact Spears® Technical Service Department :: WEST COAST : (818) 364-1611 - EAST COAST : (717) 938-9006

# Class 125 Iron Body Check Valves

Bolted Bonnet • Horizontal Swing • *Renewable Seat and Disc

**125 PSI/8.6 Bar Saturated Steam to 353º F/178º C**
**200 PSI/13.8 Bar Non-Shock Cold Working Pressure to -20º F to 150º F/-29º C to 66º C◆**

CONFORMS TO MSS SP-71 TYPE 1

**F-918-B**
Flanged

**T-918-B**
Threaded

## MATERIAL LIST

| PART | SPECIFICATION |
|---|---|
| 1. Body Bolt | Steel ASTM A 307 |
| 2. Identification Plate | Aluminum |
| 3. Bonnet | Cast Iron ASTM A 126 Class B |
| 4. Body Gasket | Synthetic Fibers |
| 5. Body Nut | Steel ASTM A 307 |
| 6. Side Plug | Brass ASTM B 16 Alloy C36000 |
| 7. Hanger Pin | Brass ASTM B 16 Alloy C36000 |
| 8. [2] Hanger | Ductile Iron ASTM A 536 |
| 9. [1] Disc | Cast Bronze ASTM B 584 Alloy C84400 or ASTM A 536 Ductile Iron with Bronze Face Ring |
| 10. Seat Ring | Cast Bronze ASTM B 584 Alloy C84400 |
| 11. Disc Nut | Brass ASTM B 16 Alloy C36000 |
| 12. Body | Cast Iron ASTM A 126 Class B |
| 13. [1] Disc Bolt | Brass ASTM B 16 Alloy C36000 |
| 14. Disc Plate | Cast Iron ASTM A 126 Class B |
| 15. Disc Cage | Cast Iron ASTM A 126 Class B |

**[1] 2" thru 4" have Bronze ASTM B 62 Disc.**
**5" thru 12" have Iron Disc with Bronze Disc Face Rings and Disc Bolt.**
**[2] 10" is Ductile Iron ASTM A 536.**

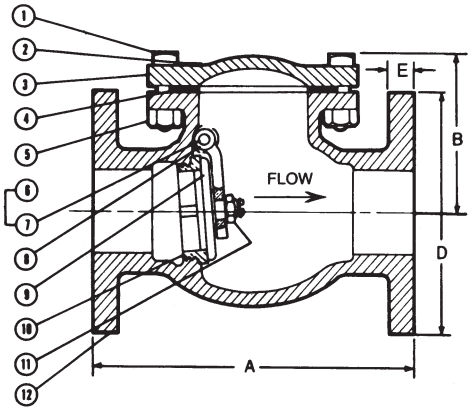


**F-918-B**
Flg x Flg

## DIMENSIONS—WEIGHTS—QUANTITIES

| Size | | Dimensions F-918-B A | | Dimensions T-918-B A | | Dimensions B | | Dimensions D | | Dimensions E | | F-918-B | | T-918-B | |
|---|---|---|---|---|---|---|---|---|---|---|---|---|---|---|---|
| In. | mm. | In. | mm. | In. | mm. | In. | mm. | In. | mm. | In. | mm. | Lbs. | Kg. | Lbs. | Kg. |
| 2 | 50 | 8.00 | 203 | 6.50 | 165 | 3.94 | 100 | 6.00 | 152 | .63 | 16 | 24 | 11 | 15 | 7 |
| 2½ | 65 | 8.50 | 216 | 7.50 | 191 | 4.50 | 114 | 7.00 | 178 | .69 | 17 | 35 | 16 | 26 | 12 |
| 3 | 80 | 9.50 | 241 | 8.00 | 203 | 5.13 | 130 | 7.50 | 191 | .75 | 19 | 47 | 21 | 31 | 14 |
| 4 | 100 | 11.50 | 292 | 9.38 | 238 | 6.13 | 156 | 9.00 | 229 | .94 | 24 | 80 | 36 | 54 | 24 |
| 5 | 125 | 13.00 | 330 | x | x | 6.81 | 173 | 10.00 | 254 | .94 | 24 | 100 | 45 | 80 | 36 |
| 6 | 150 | 14.00 | 356 | x | x | 8.00 | 203 | 11.00 | 279 | 1.00 | 25 | 146 | 66 | 121 | 54 |
| 8 | 200 | 19.50 | 495 | x | x | 9.44 | 240 | 13.50 | 343 | 1.13 | 29 | 274 | 124 | x | x |
| 10 | 250 | 24.50 | 622 | x | x | 12.06 | 306 | 16.00 | 406 | 1.19 | 30 | 426 | 193 | x | x |
| 12 | 300 | 27.50 | 699 | x | x | 16.13 | 410 | 19.00 | 483 | 1.25 | 32 | 675 | 306 | x | x |

**Note: On pump discharge, the preferred check valves are:**
- **inline, spring assisted, center-guided, lift checks**
- **spring assisted twin (double) disc**
- **swing design with lever and weight or lever and spring**

**You should also install the check valve as for far from the pump as possible and at a minimum length of 5 times the pipe diameter. Flow straighteners may be required.**

*** Proper machining facilities required.**
**x Not available this size.**
**2½" thru 12" are available with lever and weight or lever and spring.**

**◆For detailed Operating Pressure, refer to Pressure Temperature Chart on page 111.**

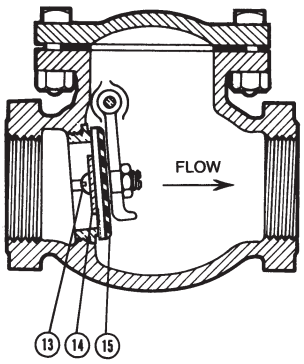


**T-918**
NPT x NPT

**WARNING: Do not use for Reciprocating Air Compressor Service.**

**NIBCO Iron Body Check Valves may be installed in both horizontal and vertical lines with upward flow or in any intermediate position.**

ARCADIS

SUBJECT:

JOB NO:

BY: DATE:

CHKD: DATE:

PAGE
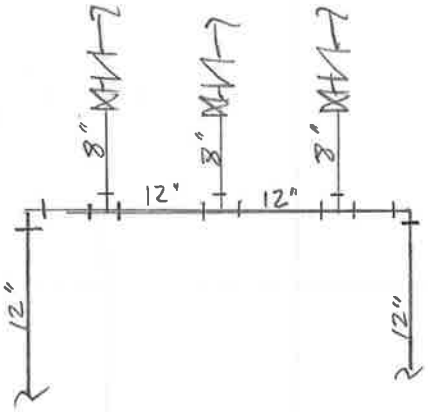
SHEET 1