PennEast Pipeline Company, LLC

PennEast PIPELINE PROJECT

APPENDIX E

DRAFT Erosion and Sedimentation Control Plan

FERC Docket No. CP15-___-000

Final

FERC Section 7(c) Application

September 2015

Contents

1.0 INTRODUCTION 1
- 1.1 Purpose of this Plan 1
- 1.2 Guidelines and Requirements 2
- 1.3 Surveys, Permits, and Notifications 2
- 1.4 Inquiries 2

2.0 EXISTING CONDITIONS 2
- 2.1 Existing Land Use and Land Cover 2
- 2.2 Receiving Waters 3
- 2.3 Waterbodies with Regulated Riparian Areas 4
- 2.4 Soil Characteristics 5
- 2.5 Naturally Occurring Geologic Formations 5

3.0 PROPOSED CONDITIONS 8
- 3.1 Proposed Land Cover 8
- 3.2 Proposed Site Drainage Characteristics 9
- 3.3 Proposed Riparian Buffer 9

4.0 SUPERVISION AND INSPECTION 9
- 4.1 Responsibilities of the Environmental Inspector 9
- 4.2 Environmental Training for Construction 11

5.0 DESCRIPTION OF EROSION AND SEDIMENT CONTROL BMPS 11
- 5.1 Protection of Sensitive and Special Value Features 12
- 5.2 Minimize Earth Disturbance 12
- 5.3 General Erosion and Sediment Control Plan Requirements 13

6.0 PROJECT SITE RUNOFF PRIOR TO SITE RESTORATION 13

7.0 RECYCLING/DISPOSAL OF MATERIALS 14

8.0 ANTIDEGRADATION ANALYSIS 14
- 8.1 Nondischarge Alternatives 14
  - 8.1.1 Alternative Routes 15
  - 8.1.2 Limited Disturbed Area 15
  - 8.1.3 Limiting Extent and Duration of the Disturbance 15
  - 8.1.4 Riparian Buffers and Riparian Forest Buffers 16
  - 8.1.5 Treatment Train Combination of BMPs 16
- 8.2 Antidegradation Best Available Combination of Technologies (ABACT) 16
  - 8.2.1 Site Access 17
  - 8.2.2 Sediment Barriers 17
  - 8.2.3 Stabilization 17

9.0 CONSTRUCTION TECHNIQUES FOR NATURAL GAS PIPELINES 17
- 9.1 Typical ROW Requirements 17
- 9.2 Access Roads 18
- 9.3 Pipe and Contractor Wareyards 18
- 9.4 Off-ROW Disturbance 18
- 9.5 Construction Sequence 19

9.5.1 Clearing 19
9.5.2 Installing Temporary Best Management Practices (BMPs) 20
9.5.3 Grading 21
9.5.4 Installing Temporary Waterbars 22
9.5.5 Trenching 22
9.5.6 Trench Dewatering 23
9.5.7 Pipe Installation 23
9.5.8 Backfilling 24
9.5.9 Hydrostatic Testing 24
9.6 ROW Restoration and Final Cleanup 25
9.6.1 Permanent Erosion Control 26
9.6.2 Revegetation and Seeding 26
9.6.3 Mulch 27
9.6.4 Winter Stabilization 28
9.6.5 Winter Construction Plans 28
9.7 Unauthorized Vehicle Access to ROW 28
10.0 SPECIAL CONSTRUCTION METHODS 29
10.1 Agricultural Areas 29
10.1.1 Drain Tiles 29
10.1.2 Irrigation 29
10.1.3 Soil Compaction Mitigation 29
10.2 Road Crossings 29
10.3 Residential Areas 30
10.3.1 Construction Procedures 30
10.3.2 Construction Techniques 30
10.3.3 Cleanup and Restoration 31
11.0 WATERBODY CROSSINGS 31
11.1 Waterbody Definitions 31
11.2 General Waterbody Procedures 31
11.2.1 Time Window for Construction 31
11.2.2 Temporary Equipment Bridges 32
11.2.3 Clearing and Grading 32
11.2.4 Installing Temporary Erosion and Sediment Control 33
11.2.5 Various Types of Crossings 33
11.2.6 Restoration 36
12.0 WETLAND CROSSINGS 36
12.1 General Procedures 37
12.1.1 Clearing and Grading 37
12.1.2 Temporary Erosion and Sediment Control 37
12.1.3 Crossing Procedure 38
12.1.4 Cleanup and Restoration 38
13.0 SPILL PREVENTION CONTROL 39
14.0 POST CONSTRUCTION ACTIVITIES 39
14.1 Post-Construction Monitoring 39

14.2 Post-Construction Maintenance 40
14.2.1 Uplands 40
14.2.2 Waterbodies and Wetlands 41
14.3 Reporting 41

Appendices

Appendix E1 Geology and Soils Table

Appendix E2 Erosion & Sediment Pollution Control Plans (NOT INCLUDED)

Appendix E3 Erosion & Sediment Pollution Control Typicals

This *DRAFT* Erosion and Sediment Control Plan (E&SCP) has been developed to address control of accelerated erosion and sedimentation resulting from earth disturbance associated with the proposed project. Following the September FERC 7(c) filing, PennEast will update this plan and layout the E&S mitigation measures in advance of permitting with the applicable regulatory agencies. The Plan currently consists of this written narrative and the attached appendices including plan drawings. It was developed to be in accordance with the requirements of 025 PA Administrative Code Chapters 78 and 102, as well as the Clean Streams Law (35 P. S. §§ 691.1001), as amended, utilizing guidelines and Best Management Practice (BMP) information provided in the Erosion and Sediment Control BMP Manual and New Jersey Soil Erosion and Sediment Control Act Chapter 251, P.L. 1975. This E&SCP complements the Site Restoration Plan (SR Plan) /Post Construction Stormwater Management Plan (PCSM Plan) prepared for this project and was planned and designed to be consistent with the SR/PCSTM Plan under PA Code § 102.8. An up to date copy of this E&SCP Plan (including this narrative and all appendices, and any subsequently granted variances to the Plan) shall be maintained and available at the project site during all stages of earth disturbance activity.

This Plan was prepared under the direct supervision of a Pennsylvania and New Jersey licensed Professional Engineer trained and experienced in erosion and sediment (E&S) control methods and techniques applicable to the size and scope of the proposed project. The supervising Professional Engineer has attended a DEP sponsored Oil & Gas industry training class for erosion and sediment control and post construction stormwater management for oil and gas activities.

1.0 INTRODUCTION

PennEast Pipeline Company, LLC (PennEast) has prepared this Resource Report to support its application to the Federal Energy Regulatory Commission (FERC or Commission) for a certificate of public convenience and necessity (Certificate) for the Project. PennEast designed its Project to provide a direct and flexible path for transporting natural gas produced in the Marcellus Shale production area in northeastern Pennsylvania to growing natural gas markets in New Jersey, eastern Pennsylvania, southeastern Pennsylvania and surrounding states with the capability of providing approximately 1.1 MMDth/day of year-round natural gas transportation service.

The Project consists of the following primary components:

- 114 miles of new 36-inch diameter mainline pipeline extending from Dallas Township in Luzerne County, Pennsylvania to Hopewell Township in Mercer County, New Jersey;
- 2.1-miles of new 24-inch diameter lateral near Hellertown, Northampton County, Pennsylvania to transport gas to an interconnection with Columbia Gas Transmission, LLC (Columbia Gas) and UGI Utilities, Inc.(UGI Utilities);
- 0.6-miles of new 12-inch diameter lateral near Holland Township, Hunterdon County, New Jersey to transport gas to Pivotal Utility Holdings, Inc. (d/b/a Elizabethtown Gas) (Elizabethtown Gas) and NRG REMA, LLC's Gilbert Power Station;
- 1.4-miles of new 36-inch diameter lateral in West Amwell Township, Hunterdon County, New Jersey to transport gas to an interconnection with Algonquin Gas Transmission, LLC (Algonquin) and Texas Eastern Transmission, LP (Texas Eastern);
- One new compressor station in Carbon County, Pennsylvania; and
- Various associated aboveground facilities including interconnects, launchers, receivers, and mainline block valves to support the pipeline system.

1.1 Purpose of this Plan

This E&SCP has been prepared for use by PennEast and its contractors as a guidance manual for minimizing erosion of disturbed soils and transportation of sediments off the right-of-way (ROW) and into sensitive resources (wetlands, streams, and residential areas) during natural gas pipeline construction. The procedures

developed in this E&SCP, which represent the PennEast's best management practices (BMP), are designed to accommodate varying field conditions while maintaining rigid minimum standards for the protection of environmentally sensitive areas.

This E&SCP is designed to provide specifications for the installation and implementation of soil erosion and sediment control measures while permitting adequate flexibility to use the most appropriate measures based on site-specific conditions. The intent of this E&SCP is to provide general information on the pipeline construction process and to describe specific measures that will be employed during and following construction to minimize impacts to the environment along the pipeline ROW.

The goal of this E&SCP is to preserve the integrity of environmentally sensitive areas and to maintain existing water quality by implementing the following objectives:

- Minimize the extent and duration of disturbance;
- Protect exposed soil by diverting runoff to stabilized areas;
- Install temporary and permanent erosion control measures; and
- Establish an effective inspection and maintenance program.

1.2 Guidelines and Requirements

The measures described in this E&SCP have been developed based on guidelines from the Federal Energy Regulatory Commission (FERC), United States Army Corps of Engineers (USACE), the United States Fish and Wildlife Service (USFWS), the United States Department of Agriculture (USDA), the Pennsylvania Department of Environmental Protection (PADEP), the New Jersey Department of Environmental Protection (NJDEP) and New Jersey Department of Agriculture - State Soil Conservation Committee as well as from the PennEast's standard construction practices.

1.3 Surveys, Permits, and Notifications

PennEast shall perform the required environmental field surveys, conduct appropriate agency coordination, and acquire the necessary environmental permits prior to start of construction of the project. PennEast shall notify the appropriate federal and state agencies prior to, during, and/or subsequent to the construction of the project, as identified in the Clearance Package/ Permit Book.

1.4 Inquiries

Inquiries regarding this E&SCP should be addressed to:

Hatch Mott MacDonald
Michael Wilcox, P.E., Project Manager
1001 Corporate Drive
Canonsburg, PA 15317
Direct: 1-724-514-5340
Cell: 1-413-519-1380
michael.wilcox@hatchmott.com

2.0 EXISTING CONDITIONS

2.1 Existing Land Use and Land Cover

Construction and operation of the Project's facilities may result in both temporary and permanent alterations to land use and land cover. Land use data were calculated based on information obtained through field surveys,

review of 2013 aerial photography and United States Department of Agriculture (USDA) National Agricultural Statistics Service (NASS) Cropland Data Layer (USDA-NASS, 2014). The existing land cover within the permit boundary is agricultural, wooded, impervious and open space.

2.2 Receiving Waters

PennEast completed a wetland and watercourse investigation of the project area. The boundary of this site investigation, and all environmental resources identified during this investigation are shown in the E&SCP drawings. A Wetland and Watercourse Delineation Report is included in the Section 404 / Chapter 105 General Permit submittal under separate cover for wetlands work completed in PA. A Freshwater Wetland Delineation Report (and Flood Hazard Area Control Report) is included in the NJDEP Individual Permit submittal under separate cover for all freshwater wetlands work completed in NJ. Please note that the NJDEP has assumed federal Section 404 authority and no direct permitting is required through the Corps unless tidal waters are impacted. The NJDEP also uses the 1989 Federal Manual and not the Corps 1987 Manual (and applicable regional supplements) for wetland delineations.

The study area associated with the project site is tributary to numerous receiving waters, High Quality (HQ) and Exceptional Value (EV) waters, and waters with trout classifications crossed by the Project in Pennsylvania are summarized in Table 2.2-1.

Table 2.2-1
Summary of Pennsylvania-Designated High Quality Waters, Exceptional Value Waters, and Water with Trout Designations[1,2]

Facility	PA Designated Use		PA Existing Use		PFBC Fishery Designations[3]		
	HQ	EV	HQ	EV	ATW	WTW	WWCW
PennEast Mainline Route Pipeline	61	9	3	10	15	119	3
Access Roads	9	2	0	0	2	13	0
Compressor Station	4	0	0	0	0	4	0
Hellertown 24-inch Lateral	0	0	0	0	0	3	0
Total	74	11	3	10	17	139	3

Source: PA Code, 2015; PFBC, 2015a-f; NHD, 2015

[1] An individual stream crossing could have more than one designation.

[2] Data is based off field-delineated waterbodies and mapped waterbodies from NHD mapped features.

[3]Wild Trout Waters, Natural Reproduction, January 2015 (PFBC, 2015a), Wild Trout Waters (PFBC, 2015b), Class A Waters, December 2013 (PFBC, 2015c).

Wild Trout Waters include:

Class A Wild Trout Streams: Streams that support a population of naturally produced trout of sufficient size and abundance to support a long-term and rewarding sport fishery.

Wilderness Trout Streams: Wilderness trout stream management is based upon the provision of a wild trout fishing experience in a remote, natural, and unspoiled environment where man's disruptive activities are minimized.

Wild Trout Streams: Stream sections supporting naturally reproducing populations of trout. A wild trout stream section is a biological designation that does not determine how it is managed; therefore, these streams may also be stocked with hatchery trout by the PFBC.

Approved Trout Streams (PFBC, 2015d). Includes Approved Trout Waters (ATW).

Key:

ATW = Approved Trout Waters (stocked with trout)

EV = Exceptional Value

HQ = High Quality

NHD = National Hydrology Dataset

PFBC = PA Fish and Boat Commission

WTW = Wild Trout Waters/Streams

WWCW = Warmwater/Coolwater Fishes

Table 2.2-2 summarizes the New Jersey Water Classifications and Trout Designation Waters crossed by the pipeline facility.

Table 2.2-2
Summary of New Jersey Water Quality Classifications and Trout Designation Waters Crossed by the Pipeline Facilities

Facility	NJDEP Water Quality Classification [a]					
	FW2-NTC1	FW2-TMC1	FW2-TPC1	FW2-NTC2	FW2-NT	FW2-TM
PennEast Mainline Route Pipeline	13	34	18	2	62	14
Gilbert 12-inch Lateral	0	0	3	0	0	0
Lambertville 36-inch Lateral	0	3	0	0	0	0

Source: NHD, 2015; NJDEP, 2014a.

[a] Data is based off of field delineated waterbodies and mapped waterbodies from NHD mapped features.

Key:

FW2-NTC1 = Freshwater, non-trout, C- 1

FW2-TMC1 = Freshwater , trout-maintenance, C-1

FW2-TPC1 = Freshwater, trout-production, C- 1

FW2-NTC2 = Freshwater, non-trout ,C-2

FW2-NT = Freshwater, non-trout

FW2-TM = Freshwater , trout-maintenance

Based on the Section 303(d) lists, Lehigh River and East Branch Monocacy Creek are Siltation Impaired Waterbodies (PADEP, 2014b).

2.3 Waterbodies with Regulated Riparian Areas

Pennsylvania

The Project alignment will cross riparian buffers regulated under PA Chapter 102. Specifically, these regulated areas include 150 feet from perennial and intermittent waters located within Exceptional Value and High Quality watersheds.

New Jersey

The Project alignment will cross riparian zones regulated under the NJ Flood Hazard Area Control Act Rules (N.J.A.C. 7:13).

PennEast intends to obtain and comply with the applicable PA and NJ permits required to authorize these disturbances.

2.4 Soil Characteristics

The location of mapped soil types are shown on the E&SCP drawings. These soil boundaries and associated information were obtained from the United States Department of Agriculture (USDA) SSURGO database. In addition to this soil mapping data, the USDA, Natural Resource Conservation Service (USDA-NRCS) "Web Soil Survey" website (http://websoilsurvey.nrcs.usda.gov/app/HomePage.htm) was used to generate an "NRCS Custom Soils Resources Report" for this project.

The soil report is included in the permit packet and contains the types, depth, slope, and limitations of the soils within the project area. Additional information in the soil report includes data on the physical characteristics of the soils, such as their texture, resistance to erosion, and suitability for the intended use. Land use data were calculated based on information obtained through field surveys, review of 2013 aerial photography and United States Department of Agriculture (USDA) National Agricultural Statistics Service (NASS) Cropland Data Layer (USDA-NASS, 2014). The land use characteristics are classified by primary vegetation cover type and/or predominant land use. Land use types within the Project area are classified into the following six categories:

- Agricultural Land - Active cropland, pasture, orchards, vineyards, and/or hay fields;
- Forest/Woodland - Tracts of upland or wetland forest or woodland that would be removed for the construction ROW or extra work or staging areas;
- Open Land - Non-forested lands, herbaceous and scrub-shrub wetlands, and maintained utility ROW;
- Residential Land - Residential yards, residential subdivisions, and planned new residential developments;
- Industrial/Commercial Land - Electric power or gas utility stations, manufacturing or industrial plants, landfills, mines, quarries, commercial or retail facilities, and roads;
- Open Water - Water Crossings greater than 100 feet;
- Special Use – Characterized by religious and institutional use such as churches and schools, parks, baseball fields, cemeteries; and
- Urban Land - characterized by high human population density and built features in comparison to the areas surrounding it.

The limitation of soils pertaining to earthmoving projects, and the means to address the identified soils limitations are included on the E&SCP drawings.

2.5 Naturally Occurring Geologic Formations

General Geology:

Information regarding geological conditions for the specific Project locations was obtained from the USGS. Refer to the site-specific USGS 7.5-minute quadrangle topographical maps of the Project included in Resource Report Appendix A for detailed information on the Project area topography.

Bedrock Geology:

Table E1 within Appendix E1 of this narrative summarizes the geologic conditions associated with the project. A map presenting the bedrock geology crossed by the Project area is presented in Resource Report 6 in Figure 6.1-1 Bedrock Geologic Map.

Surficial Geology:

Table E1 within Appendix E1 of this narrative summarizes the surficial geology crossed by the Project.

Acid Producing Soils:

There are acid producing soils located in southeastern Mercer County, New Jersey which, is outside of the Project route. In the event of any acid producing soils or if soils with potential to cause the release of acid are encountered, PennEast will follow the practices outlined in NJDEP Standards for Erosion and Sediment Control in New Jersey as well as those from Mercer County Conservation District.

Coal Mining:

There are numerous reported abandoned mines or reclaimed mines located within 0.25 miles of the Project area in Luzerne County between MPs 5 and 11.3 (PADEP, 2010) (PADEP, 2015) (U.S. Mining, 2013). The nearest coal mining operation (current or historical) is over seven (7) miles away in Northumberland County (PADEP, 2015). There is no active or abandoned coal mines located within 0.25 miles of the New Jersey portion of the Project.

Mineral Resources:

Information regarding mining activities and locations was obtained from the Pennsylvania Department of Environmental Protection (PADEP) Office of Active and Abandoned Mine Operations and USGS Mineral Resources Online Spatial Data (PADEP, 2014a-c; USGS, 2005) and NJDEP Geological and Water Survey, Map Archive of New Jersey's abandoned mines (Sept 2011).

In Pennsylvania, there are two active quarries located within 0.25 miles of the Project area: Pioneer Aggregates, Inc. (also known as the Poppel Quarry) located at milepost (MP) 8.7 to 9.4 in Luzerne County and Wilkes-Barre Materials, LLC located near MP 9.7 to 10.1 in Luzerne County. In addition, there are numerous reported abandoned mines and reclaimed mines located within 0.25 miles of the Project area in Luzerne County between MPs 5 and 11.3. Additional investigations on abandoned mines and blasting studies are underway, and the results will be presented in the final Resource Report.

In NJ, no mines or quarries are located within 0.25 miles of the Project area.

Landside Susceptibility:

"Landslide" is a general term for downslope mass movement of soil, rock, or a combination of materials on an unstable slope. Landslides can vary greatly in their rate of movement, area affected, and volume of material. The principal types of movement are falling, sliding, and flowing, but combinations of these are common. The primary cause of landslides is when colluvial (loose) soil and old landslide debris on steep slopes give way. The geologic instabilities that cause landslides are often exacerbated by highway projects in which the earth is cut and soil is loosened. Other primary causes of landslides are rainfall or rain-on-snow events that can weaken debris on steep mountain slopes (McCormick Taylor, 2009). Figure 6.3-5 in Resource Report 6 presents the USGS landslide susceptibility map, which indicates the areas where landslides are most concentrated in the Project area.

According to the USGS landslide susceptibility map, the Project location in New Jersey has a low landslide incidence. However, in Luzerne, Carbon, and Northampton Counties, Pennsylvania, portions of the Project

are susceptible to landslides. The Project location between MPs 5.3 and 15.2 in Luzerne County and between MPs 40.5 in Carbon County and 54.1 in Northampton County have a relatively high susceptibility to landsliding with moderate incidence. The Project area between MP 20.9 in Luzerne County and MP 23.6 in Carbon County and between MPs 33.5 and 35 and 38 and 40.5 in Carbon County have a moderate landslide incidence (1.5 - 15% of the area is involved in landsliding).

PennEast conducted a seismic hazard evaluation, including a screening-level ground failure evaluation and a pipeline deformation analysis, to evaluate potential seismic hazards such as landslides. A breakdown of the landslide susceptibility zones in the Project area is included in the Geotechnical Overview Report in Appendix O.

In addition, as part of the seismic hazard evaluation, PennEast conducted a preliminary evaluation of seismically induced landslides using the USGS landslide susceptibility maps and induced seismic demand. This procedure provides negligible Permanent Ground Disturbance (PGD) for MPs with low and moderate susceptibility and PGD displacements less than 0.1 m for MPs located in high susceptibility zone including segments from MP 5.3 to MP 15.2 and MP 40.5 to MP 54.1. Site-specific evaluations of landslide risks are ongoing by Hatch Mott MacDonald. Completed evaluations are included in Appendix O of Resource Report 1. Potential risks will continue to be investigated and alternative mitigations evaluated as the Project moves forward with engineering design.

Earthquake Probability:

A seismic disturbance is any earth movement (natural or manmade) that is caused by a momentary disturbance of the elastic equilibrium of a portion of the earth. URS conducted a seismic hazard evaluation to evaluate the potential seismic hazard of the 114 mile long Project area, which is presented in Resource Report 6 in Appendix O. The purpose of the study was to estimate the levels of ground motions that will be exceeded at specified annual frequencies (or return periods) by performing a probabilistic seismic hazard analysis (PSHA). Based on the results of the PSHA, design ground motions in terms of peak horizontal ground acceleration (PGA) and peak horizontal ground velocity (PGV) were estimated and provided as input for the seismic design of the pipeline.

In summary, seismic hazard due to wave propagation effects should not pose a significant threat to the PennEast Project. Also, there is no conclusive evidence of Quaternary fault displacement. Therefore, the permanent ground displacement (PGD) hazard due to fault offset is considered insignificant.

Potential Geologic Hazard:

Subsidence is the local downward movement of surface material with little or no horizontal movement (Nuhfer, Proctor, and Moser, 1993). Subsidence is a potential geologic hazard in areas where karst terrain occurs and where underground mining has taken place. In karst terrain, limestone and dolomite bedrock are eroded by water and create karst features such as subsurface channels, caves, and sinkholes. USGS Mineral Resources On-Line Spatial Database was used to report the presence or absence of sinkholes for the Project areas. A detailed geophysical survey was completed to investigate karst conditions proximate to the Project area. A summary of the results and any required mitigation measures are included as an appendix in Resource Report 6.

Subsidence associated with underground mining can be either a planned or an unplanned activity. During longwall mining activities, coal extraction activities result in planned subsidence events. For other underground mining operations, surface subsidence is usually an unplanned event. There are numerous underground mines in the Wyoming Valley of Luzerne County, Pennsylvania. PennEast met with the PA Bureau of Abandoned Mine Reclamation which administers and oversees the Abandoned Mine Reclamation Program in Pennsylvania. Maps of mines in the project area were obtained and have been incorporated into the siting and engineering design processes.

Flash Flooding:

Flash floods are short-term events, occurring within two to six hours of the source event, such as a heavy rain, dam break, or levee failure (NOAA 2015). Flash flooding is possible from streams adjacent to Project facilities if water depths rise rapidly above stream banks.

Luzerne and Carbon Counties, like many others in PA are flood prone because of the mountainous terrain and because most of the communities are located along streams and rivers valleys. In addition, community development of the floodplain has resulted in frequent flooding. For inland areas, excess water from snowmelt or rainfall accumulates and overflows onto stream banks and adjacent floodplains.

Pennsylvania

The PennEast mainline route pipeline crosses Special Flood Hazard Areas (SFHA) in PA; the 24-inch Hellertown Lateral does not cross any SFHAs (Table 2.3-6).

New Jersey

The PennEast mainline route and the 12-inch Gilbert lateral cross SFHAs in NJ; the 36-inch Lambertville Lateral does not cross any SFHAs (Table 2.3-6). In addition, the pipeline route crosses regulated flood hazard areas (FHA) consisting of floodways and flood fringes of waters regulated under the NJ Flood Hazard Area Control Act Rules at N.J.A.C. 7:13.

PennEast assessed the Flood Insurance Rate Maps issued by the FEMA to identify crossings of areas subject to flooding and high-volume flows. FEMA SFHAs are areas located within the 100-year floodplain. Resource Report 2 provides a summary of the FEMA Flood Zones crossed by the pipeline facilities in table 2.3.6.

Faults:

Eastern North America including the project site, is far from the boundaries of the North American plate, which are located in the center of the Atlantic Ocean, the Caribbean Sea, and along the west coast of North America.

The project area crosses the Ramapo fault systems (RFS) which extends from PA to NJ into New York. No Quaternary-active fault capable of producing surface rupture is recognized in the North Eastern US. No authoritative data source recognizes a Quaternary fault in the vicinity of the pipeline or the North Eastern US. Hence, the surface fault displacement hazard along the pipeline is considered to be negligible and no mitigation measures are required.

3.0 PROPOSED CONDITIONS

The amount of earth disturbed is to be minimized as much as possible. Planning of the construction sequencing is required to limit the amount and duration of open trench sections, as necessary, to prevent excessive erosion or sediment flow into environmental resource areas. Approximately 2,431 acres including permanent easement, temporary and additional temporary workspace will be disturbed throughout the project work limits along the 114-miles of proposed pipeline. This disturbance is to be temporary. Disturbed areas are to be immediately seeded and mulched upon placement of the proposed pipeline and associated fill.

Earth disturbance is to be restricted to the Limit of Disturbance (LOD) delineated on the E&SCP drawings. These drawings contain “Plan views” which depict proposed facilities and site features. This includes the limits of earth disturbance, the locations of existing roads, and the location of proposed BMPs.

3.1 Proposed Land Cover

No permanent topographic or land cover changes are proposed along the pipeline alignment aside from areas within the tree clearing limits, long-term maintenance to trim woody vegetation and occasional mowing.

During the initial construction stage of the project, much of the area will be bare earth. Upon installation of the pipeline, the ROW is to be stabilized with vegetative cover as indicated on the E&SCP drawings. Construction of one (1) compressor station and is part of the Project which will permanently alter the land cover. The new compressor Station will be located at MP 26.6 in Kidder Township, Carbon County, PA. Additionally, the table below provides a comprehensive list of the Project's proposed aboveground facilities.

3.2 Proposed Site Drainage Characteristics

An assessment of the project site's natural features was completed at the initial stage of project planning. The proposed facilities have been sited to protect sensitive natural resources by avoiding these areas whenever possible. The site has also been planned and designed to maintain pre-development drainage patterns to the maximum extent practicable. A conscious effort has been made to maintain existing vegetation where possible and limit the extents of earth disturbance to the area necessary to construct the proposed facilities. Where possible, site drainage will be directed to previously established drainage features. No permanent changes to topography or drainage patterns are proposed aside from permanent waterbars to help prevent formation of rivulets and stormwater management at the compressor station site. The location of the proposed drainage features is shown on the E&SCP drawings.

3.3 Proposed Riparian Buffer

The proposed project is an oil and gas activity for which site reclamation or restoration is part of the permit authorization in PA Code Chapters 78, 86-90 and 102 and in NJ NJAC 7:13. The proposed activities will leave existing riparian buffers undisturbed to the extent practicable. Several streams crossed by the project pipeline are located in an area listed by the Pennsylvania Fish and Boat Commission (PFBC) as Approved Trout Waters (PFBC, 2015). Therefore wetlands that are located in or along the floodplain of the reach of Exceptional Value Waters and/or Wild Trout Waters and their tributaries are considered Exceptional Value (EV) Wetlands. Wetlands that will be impacted as a result of the project are being permitted under a separate permit. Riparian buffers within this particular area will be protected and maintained according to PA and NJ regulations which are covered in Section 2.3.

4.0 SUPERVISION AND INSPECTION

To effectively mitigate project-related impacts, the E&SCP must be properly implemented in the field. Quick and appropriate decisions in the field regarding critical issues such as stream and wetland crossings, placement of erosion controls, trench dewatering, spoil containment, and other construction related items are essential.

To ensure that the E&SCP is properly implemented, it is planned that there will be a Chief Environmental Inspector as well as two Environmental Inspectors (EIs) for each spread. FERC third-party monitors will also review construction throughout the construction time period. The EI will have peer status with all other activity inspectors and will report directly to the Resident Engineer/ Chief Inspector who has overall authority on the construction spread. On smaller segment of the project, the EI role may be carried out by the Resident Engineer/ Chief Inspector or a Craft Inspector, as designated by PennEast. The EI will have the authority to stop activities that violate the environmental conditions of the FERC's Orders (if applicable), other federal and state permits, or landowner requirements, and to order corrective action.

4.1 Responsibilities of the Environmental Inspector

At a minimum, the EI shall be responsible for:

1. Inspecting construction activities for compliance with the requirements of this E&SCP, the construction drawings, the environmental conditions of the FERC's Orders (if applicable), proposed

mitigation measures, other federal or state environmental permits and approvals, and environmental requirements in landowner easement agreements;

2. Identifying, documenting, and overseeing corrective actions, as necessary to bring an activity back into compliance;
3. Verifying that the limits of authorized construction work areas and locations of access roads are visibly marked before clearing, and maintained throughout construction;
4. Verifying the location of signs and highly visible flagging marking the boundaries of sensitive resource areas, waterbodies, wetlands, or areas with special requirements along the construction work area;
5. Identifying erosion/sediment control and stabilization needs in all areas;
6. Ensuring that the location design of waterbars will not cause erosion or direct water into sensitive environmental resource areas, including cultural resources sites, wetlands, waterbodies, and sensitive species habitat;
7. Verifying that dewatering activities are properly monitored and do not result in the deposition of sand, silt, and/or sediment into a sensitive environmental resource areas, including wetland or waterbody, cultural resource sites, and sensitive species habitats; stopping dewatering activities if such deposition is occurring and ensuring the design of the discharge is changed to prevent reoccurrence; and verifying that dewatering structures are removed after completion of dewatering activities;
8. Ensuring that subsoil and topsoil are tested in agricultural areas to measure compaction and determine the need for corrective action;
9. Advising the Chief Inspector when environmental conditions (such as wet weather or frozen soil) make it advisable to restrict or delay construction activities to avoid topsoil mixing or excessive compaction;
10. Ensuring restoration of contours and topsoil;
11. Verifying that the soils imported for agricultural or residential use have been certified as free of noxious weeds and soil pests, unless otherwise approved by the landowner;
12. Ensuring that erosion controls are properly installed to prevent sediment flow into environmental resource (e.g., wetlands, waterbodies, cultural resource sites, and sensitive species habitats) and onto roads and determining the need for additional erosion control devices;
13. Inspecting temporary erosion control measures at least:
    a) On a daily basis in areas of active construction or equipment operation;
    b) On a weekly basis in areas with no construction or equipment operation; and
    c) Within 24 hours of each 0.5 inch of rainfall.
14. Ensuring the repair of all ineffective temporary erosion control measures within 24 hours of identification, or as soon as conditions allow if compliance with this time frame would result in greater environmental impacts;
15. Identifying areas that should be given special attention to ensure stabilization and restoration after the construction phase;
16. Ensuring that the Contractor implements and complies with PennEast's Spill Prevention Control and Countermeasure (SPCC) Plan; and

17. Keeping records of compliance with the environmental conditions of the FERC's Orders, proposed mitigation measures, and other Federal or state environmental permits during active construction and restoration; and
18. Verifying that locations for any disposal of excess construction materials for beneficial reuse comply with Section 9.5.3.2 and 9.5.3.3 of this E&SCP.

4.2 Environmental Training for Construction

Environmental training will be given to both PennEast personnel and contractor personnel whose activities will impact the environment during pipeline construction. The level of training will be commensurate with the type of duties of the personnel. All construction personnel from the chief inspector, EI, craft inspectors, contractor job superintendent to loggers, welders, equipment operators, and laborers will be given some form of environmental training. Note that PennEast will use FERC's third-party monitoring program during construction. In addition to the EI, all other construction personnel are expected to play an important role in maintaining strict compliance with all permit conditions to protect the environment during construction. Training will be given prior to the start of construction and throughout the construction process, as needed, and will cover the following issues:

- The specifics of this E&SCP and the SPCC Plan;
- Job or activity specific permit requirements;
- Company policies and commitments;
- Cultural resource procedures and restrictions;
- Threatened and endangered species restrictions; and
- Any other pertinent information related to the job.

5.0 DESCRIPTION OF EROSION AND SEDIMENT CONTROL BMPS

The erosion and sediment control best management practices (BMPs) for this earth disturbance activity have been planned to minimize the extent and duration of the proposed earth disturbance, to protect existing drainage features and vegetation, minimize soil compaction, and employ measures and controls that minimize the generation of increased runoff. Specific BMPs have been selected for this site in order to achieve these broad goals. The location of each proposed BMP is shown on the E&SCP drawings.

Waterbars

Earthen waterbars (slope breakers) are specified on the E&SCP plan view drawings in hillside locations where it will be necessary to divert both upslope and disturbed area runoff to vegetated areas to help minimize accelerated erosion and sedimentation. A construction detail is provided on Drawing 000-03-09-003 (Figure 015). They are to be aligned such that runoff will be directed towards the downslope side of the disturbed area and avoid flowing back into the ROW. The construction detail calls for a sediment barrier (typically compost filter sock or silt fence) at the waterbar point of discharge.

Waterbars on ROWs shall be left in place after permanent stabilization has been achieved. Waterbars will be removed from agricultural use parcels to allow for the continuation of farming activities. Maintenance of waterbars shall be provided until ROW has achieved permanent stabilization.

Trench Plugs

Trench plugs are specified on the E&SCP drawings to inhibit channelized flow which may occur in the trench when open during construction. Trench plugs shall be installed to prevent the trench from draining the wetlands and or changing the hydrology. The construction detail is presented on Drawings 000-03-09-004 (Figures 020 and 021).

Rock Construction Entrances

Rock construction entrances are specified on the E&SCP plan view drawings to control sediment tracking from the construction site at egress points. Vehicle access locations are shown in Drawings 000-03-03-001 through 000-03-03-084. The rock construction entrance detail is presented on Drawing 000-03-09-001 (Figure 002). In special protection watersheds, wash racks are to be used to better remove dirt from exiting vehicles.

Erosion Control Blanket

In accordance with the notes listed on Drawing 000-03-09-004 (Figure 023), erosion control blanket is to be placed on disturbed areas within 50 feet of streams and wetlands and on slopes steeper than 3H:1V. Areas to be blanketed are indicated on the E&SCP plan view drawings.

Sediment Barriers

In special protection watersheds, compost filter socks are specified on the E&SCP plan view drawings. The compost filter sock detail is presented on Drawing 000-03-09-001 (Figure 04).

In non-special protection watersheds, silt fence is generally specified on the E&SCP plan view drawings. The silt fence construction detail is presented on Drawing 000-03-09-001 (Figure 05). Notes on Drawing 000-03-09-001 (Figure 04) indicate 18" compost filter sock may be substituted for super silt fence and 12" compost filter sock may be substituted for 18" to 30" silt fence. The notes on Drawing 000-03-09-002 (Figure 010) indicate straw bale barrier may be substituted for 18" silt fence.

The J-hook sediment barrier configuration detail is presented on Drawing 000-03-09-003 (Figure 17). This configuration becomes necessary when sediment barrier is needed but cannot be oriented parallel to the contour. It is intended to intercept runoff from disturbed areas and capture some of the flow in a "J-hook" at the low end of each section of sediment barrier. J-hook sediment barriers are necessary at the discharge end of waterbars where a well vegetated area is not available.

A Rock Filter Outlet detail is provided on Drawing 000-03-09-002 (Figure 11). Rock Filter Outlets are to be installed at low points of silt fence where overtopping damage is apparent.

Temporary and Permanent Revegetation

Revegetation requirements and procedures are presented in section 9.6.2 of this E&SCP. As indicated on the drawings, disturbed areas are to be temporarily stabilized in accordance with regulatory agency requirements. Upon completion of construction activity, disturbed areas are to be permanently stabilized.

5.1 Protection of Sensitive and Special Value Features

During project planning, the pipeline layout was field viewed to identify wetlands and streams. Where possible, the alignment was adjusted to minimize impacts. The opportunity to avoid impacts, however, is constrained by landowner preferences and construction requirements.

5.2 Minimize Earth Disturbance

Limiting the extents and duration of earth disturbance to that absolutely necessary to construct the proposed facility is a simple and the most effective BMP available. The LOD delineated on the E&SCP drawings has been established to restrict construction activities to the minimum area needed to effectively and efficiently construct the proposed facilities. In addition to limiting the extents of the proposed earth disturbance, construction activities have been planned to limit the duration of earth disturbance.

Installation of the pipeline will typically proceed from one end of the construction spread to the other in an assembly line or "mainline" fashion. The spacing between the individual crews responsible for each

interdependent activity is based on anticipated rate of progress. Construction is sequenced to limit, to the extent possible, the amount and duration of open trench sections, to prevent excessive erosion or sediment flow into environmental resource areas.

5.3 General Erosion and Sediment Control Plan Requirements

The BMPs listed in this E&SCP shall be installed and maintained in accordance with FERC requirements and the PA DEP Erosion and Sediment Pollution Control Program Manual, March and Standards for Erosion and Sediment Control in New Jersey, 2014 Edition. These BMPs shall be installed as shown prior to earth disturbance (including clearing and grubbing) within the drainage area of the BMP in question. Appropriate BMPs shall be provided for each stage of activity. Each BMP shall be kept functional until all earth disturbances within the drainage area are completed and a minimum vegetative cover (uniform 70% coverage of perennial vegetation over the entire disturbed area) has been achieved or other suitable permanent erosion protection has been installed.

At least 7 days prior to starting any earth disturbance activities (including clearing and grubbing), the owner and/or operator shall invite all contractors, the E&SCP preparer, the SR/PCSM Plan preparer, and a representative from the applicable PA and NJDEP regional office to an on-site preconstruction meeting.

Prior to commencement of any earth disturbance activity including clearing and grubbing, the owner and/or operator shall clearly delineate sensitive areas, riparian forest buffer boundaries, areas proposed for infiltration practices, the limits of clearing, and trees that are to be conserved within the project site. These parties shall also install appropriate barriers where equipment may not be parked, staged, operated, or located for any purpose.

E&S measures and facilities shall be installed and operational as indicated in the construction schedule prior to any earth moving activities. See the "Installing Temporary Best Management Practices (BMPs)" in Section 9.5.2 of this E&SCP and on the E&SCP drawings. Control measures must be in place and operational at the end of each workday. Where it is possible, the disturbed area will be permanently stabilized immediately after the final earthmoving has been completed. For disturbed areas not able to be permanently stabilized, interim stabilization in the form of temporary seeding and mulching will be implemented. Until the site is permanently stabilized, all E&S measures must be maintained properly by the Contractor.

After permanent stabilization is achieved, temporary E&S measures will be removed. Areas disturbed during removal of the controls must be stabilized immediately. For vegetated areas, permanent stabilization is defined as a uniform 70% perennial vegetative cover.

Minor modification to the approved E&SCP shall be noted on the E&SCP that is available at the site and initialed by the appropriate reviewing entity staff from PA or NJ. Minor changes to the E&SCP may include adjustments to BMPs and locations within the permitted boundary to improve environmental performance, prevent potential pollution, change in ownership or address, typographical errors and on-site field adjustments such as the addition or deletion of BMPs, or alteration of earth disturbance activities to address unforeseen circumstances.

Major modifications to the approved E&SCP involving new or additional earth disturbance activity other than those described as minor modifications above, and/or the addition of a discharge will require prior approval by the reviewing entity and may require the submittal of a new E&SCP.

6.0 PROJECT SITE RUNOFF PRIOR TO SITE RESTORATION

A primary component of this E&SCP was the design of erosion and sediment control BMPs to minimize and control accelerated erosion and minimize the generation of increased runoff. All proposed E&S facilities have been designed per design guidance provided in the Erosion and Sediment Pollution Control Program Manual (PADEP, 2012) and the Standards for Soil Erosion and Sediment Control in New Jersey (2014). Aside from

road crossings, there are significant areas of existing pavement within the proposed limits of disturbance, such as commercial parking lots.

This linear project traverses many watersheds. Runoff cannot be meaningfully or practically calculated without defining many discharge points and/or boundaries. Also, parameters describing runoff characteristics of disturbed construction zones, giving consideration to the attenuating effect of sediment barriers, trenches, and waterbars are neither readily available nor well-established. Therefore, runoff volume and peak discharge estimates have not been provided. Proposed BMPs were sized based on the maximum tributary drainage area anticipated during construction. Runoff volumes and rates for specific BMPs were calculated utilizing the methods recommended in the Manual for that type of facility.

7.0 RECYCLING/DISPOSAL OF MATERIALS

Building materials and other construction site wastes must be properly managed and disposed of to reduce potential for pollution to surface and ground waters as per 25 PA Code § 102.4(b)(5)(xi). All building materials and wastes shall be removed from the site and recycled or disposed of in accordance with PADEP's Solid Waste Management Regulations at 25 Pa. Code 260.1 et seq., 271.1 and 287.1 et. seq and applicable NJ codes (EPA Stormwater Pollution Prevention Plan). No building materials, wastes, or unused building materials shall be burned, buried, dumped, or discharged at the site. No off-site disposal area has been identified as part of this E&SCP. Construction waste will be disposed of properly by the Contractor at a state-approved facility or recycled.

The Contractor will develop and implement procedures which will detail the proper measures for disposal and recycling of materials associated with or from the project site in accordance with PADEP and NJDEP regulations. Construction wastes include, but are not limited to, excess soil materials, building materials, concrete wash water, and sanitary wastes that could adversely impact water quality. The Contractor will inspect the project area weekly and properly dispose of all construction wastes. Measures will be planned and implemented for housekeeping materials management and litter control. Wherever possible, re-useable wastes will be segregated from other waste and stored separately for recycling.

The Contractor shall be responsible for submitting an E&SCP for any borrow or waste areas required completing the work. Disposal locations for excess soil/rock waste will appropriate BMPs implemented at the waste site. The disposal locations must be verified with the applicable state department to show compliance with wetland and floodplain regulations. If an off-site location is used for borrow or disposal, the contractor is responsible for developing and implementing an adequate E&SCP(s) and submitting the E&SCP(s) to the applicable state department for review and approval. The Contractor must immediately stabilize the waste site upon completion of any stage or phase of earth disturbance activity at the waste site.

8.0 ANTIDEGRADATION ANALYSIS

As identified in Section 2.2 of this narrative, one or more of the receiving surface waters for this project are classified as siltation impaired waters identified in the 2014 Pennsylvania Integrated Water Quality Monitoring and Assessment Report and 2011 New Jersey Surface Water Quality Standards. The following antidegradation analysis has been prepared in accordance with PA Code, §102.4(b)(6) and N.J.A.C 7:9B- 1.5(D).

8.1 Nondischarge Alternatives

The proposed project has been evaluated for nondischarge alternatives for compliance with state regulatory agency antidegradation requirements. Nondischarge alternatives are defined as environmentally sound and cost effective BMPs that individually or collectively eliminate the net change in stormwater volume, rate and quality for storm events up to and including the 2-year design storm when compared to the stormwater rate, volume and quality prior to the earth disturbance activities.

Various BMPs identified as nondischarge alternatives in the Erosion and Sediment Pollution Control Program Manual (PADEP, 2012) and the Standards for Soil Erosion and Sediment Control in New Jersey (2014) were considered and evaluated for implementation as part of the proposed activities. These alternatives were evaluated individually, and in various combinations, for their ability to minimize accelerated erosion and sedimentation during the earth disturbance activity in order to achieve no net change from pre-development to post-development volume, rate and concentration of pollutants in stormwater runoff. The following nondischarge alternatives are utilized or considered for implementation on this project:

8.1.1 Alternative Routes

As part of the overall pipeline route evaluation process PennEast undertook a thorough routing study and Critical Issues Assessment (CIA). The routing study initially focused on the identification of a series of corridors that extended from Dallas Township in Luzerne County, PA to Hopewell Township in Mercer County, NJ. PennEast initially looked at existing utility corridors (natural gas, liquid pipeline, electric transmission, water, and sewer) to identify potential areas where the pipeline could parallel or be co-located within existing maintained ROWs. This assessment found that some of these ROWs had been encroached upon by residential and commercial development resulting in inadequate area for the staging and construction of an additional pipeline between the existing facilities and the neighboring developments. Where environmental impacts were not greater, PennEast has aligned the Project with as many existing utility corridors as possible, while ensuring a Project that can be safely constructed and operated.

PennEast worked with engineering and design professionals to avoid and/or minimize potential direct impacts to environmental resources. The proposed construction work area has been reduced at wetland crossings to minimize impacts wherever feasible. In addition, right-of-way agents have worked and continue to work with individual landowners to avoid sensitive features on properties and address their concerns.

In accordance with FERC requirements, PennEast selected the most reasonable and practicable alternative route that would maximize the use of co-location along existing corridors and cause the least amount of environmental damage. This was followed by a CIA screening of these corridors to determine which were most feasible from an environmental and engineering perspective. A selected 400-foot wide route corridor was then analyzed for a width of 200 feet on either side of the centerline for the desktop analysis. This distance was chosen in order to be able to adjust the pipeline alignment should constraints be identified during field surveys, and to allow adequate area for construction adjustments. The route was assessed using Federal, State and Regional secondary source databases to map out resources in proximity to the corridor. Once this mapping was completed, a meeting was held to electronically review the mapping on aerial photographs with engineers, wetland ecologists, wildlife biologists, cultural resource specialists and other professionals. The route was desktop evaluated along its entirety, and the centerline adjusted to avoid and/or minimize direct impacts to known resource areas.

8.1.2 Limited Disturbed Area

As discussed in Section 5.2, the LOD delineated on the E&SCP drawings has been established to restrict construction activities to the minimum area needed to effectively and efficiently construct the proposed facilities. This BMP is very effective at reducing the runoff volume rate, volume and concentration of pollutants in stormwater runoff. This BMP is “self-crediting” in that it automatically reduces the area to be treated and provides a corresponding reduction in stormwater impacts. However, it is not capable of addressing the impacts of the change in land cover associated with the proposed earth disturbance.

8.1.3 Limiting Extent and Duration of the Disturbance

This nondischarge alternative will be utilized to the extent possible on this project. The majority of the proposed earth disturbance will occur in the first stage of the project, with a much smaller earth disturbance

occurring during site restoration in the final stage of the project. As described in Section 9.5 Construction Sequence, and throughout this E&SCP, the duration and extent of earth disturbances will be limited to the current stage of work to be completed. Temporary or permanent stabilization is to occur as soon as possible upon completion of each stage. This BMP is very effective at reducing the concentration of pollutants in stormwater runoff and reducing the impact of bare earth on runoff volume and rate. However, it is not capable of addressing the impacts of the long term change in land cover associated with the proposed earth disturbance.

8.1.4 Riparian Buffers and Riparian Forest Buffers

The feasibility of utilizing a riparian forest buffer meeting the requirements of 25 PA Code §102.14 was analyzed for the proposed project. The following information was considered when determining whether or not a riparian forest buffer was feasible for this project:

- Existing site conditions such as topography, surface waters, property boundaries, and surface restrictions such as regulatory setbacks from buildings, water wells and surface waters inhibit the ability to construct the necessary facilities for the proposed activities in a configuration that remains 150' from existing surface waters.
- PennEast's ability to implement riparian forest buffers is limited by the fact that they do not own the property on which the proposed earth disturbance will occur. Protection in perpetuity of land for riparian buffers utilized for this purpose through deed restriction, conservation easement, or other mechanisms were not acceptable to the landowner.

For these reasons, it was not possible to use a riparian buffer or riparian forest buffer to satisfy the antidegradation requirements of §102.4(b)(6) for the proposed earth disturbances.

8.1.5 Treatment Train Combination of BMPs

A combination of cost-effective and environmentally sound BMPs were considered for installation in a "treatment train" that collectively eliminate the net change in stormwater volume, rate and quality from pre-development to post-development conditions. The primary metric prohibiting the proposed project from achieving non-discharge alternatives is the additional runoff volume generated by the earth disturbance necessary for the proposed activities. Permanent removal of runoff volume from the design storm hydrograph during earth disturbance phases was excluded from the available design alternatives due to the elevated sediment loadings expected during this stage of site construction. The "treatment train" approach was determined to be infeasible as a non-discharge alternative.

As demonstrated above, there is no combination of nondischarge alternative BMPs that enable the earth disturbance activities to achieve no net change from pre-development to post-development volume, rate and concentration of pollutants in stormwater runoff up to and including the 2-year/24-hour storm. In the absence of feasible nondischarge alternatives, Antidegradation Best Available Combination of Technologies (ABACT) BMPs will be utilized to address antidegradation requirements for the Pennsylvania portion of the project.

8.2 Antidegradation Best Available Combination of Technologies (ABACT)

As demonstrated in the previous section, nondischarge alternatives do not exist for the proposed project. Environmentally sound and cost-effective ABACT BMPs will be utilized to demonstrate that any change in PA stormwater runoff rate, volume, or quality will maintain and protect the existing quality and water uses of receiving surface waters and preserve existing baseflow. The E&SCP shows the locations of all planned ABACT BMPs and details for construction of these facilities. The following is a summary of the combination of ABACT BMPs that have been incorporated into the site design and the features that make them ABACT:

8.2.1 Site Access

- Wash Rack included in Rock Construction Entrance(s)
- Wash Rack discharge to a sediment removal facility

8.2.2 Sediment Barriers

- Compost filter socks will generally be utilized for all linear perimeter controls, if necessary other sediment barriers control devises (silt fence, super silt fence, etc.) may be used

8.2.3 Stabilization

- Disturbed areas immediately stabilized upon completion, or temporary cessation, of earth disturbance activity
- Disturbed areas stabilized with erosion control blanket within 100 feet of special protection surface waters, within 50 feet of all other receiving surface waters, and on slopes 3H:1V or steeper

For the New Jersey segment of the project similar structural and nonstructural BMPs will be utilized to prevent any degradation or measurable changes to either Category 1 or Category 2 waters crossed by the project or within the project workspace. There are no Outstanding National Resource Waters within the project corridor.

9.0 CONSTRUCTION TECHNIQUES FOR NATURAL GAS PIPELINES

9.1 Typical ROW Requirements

During project review, conditions evaluated include topography, soils, bedrock, boulders, wetlands, and waterbodies, as well as proximity to existing roads, railroads, residences. PennEast has considered these noted conditions along with machinery requirements needed for safe pipeline and support facility installation. Minimum size and area requirements for worker safety involving construction activities established by the U.S. Department of Transportation (DOT) and Occupational Safety and Health Administration (OSHA) were also considered. Under certain conditions, additional workspace may be necessary to maintain safe practices in specific locations and would extend beyond the nominal 100-foot corridor.

The Project requires a 50-foot permanent ROW and an approximately 50-foot temporary construction workspace for a nominal 100-foot-wide construction corridor. This corridor width is based on construction conditions of similar projects within Pennsylvania and New Jersey. From the center of the ditch, the spoil side of the construction ROW is proposed to be 35 feet. This footprint will serve as the primary spoil storage area. Thus, the working side of the construction ROW will typically be 65 feet wide from the center of the ditch to the edge of the ROW and will serve to accommodate trench excavation, bank sloping, and safe equipment mobilization. Agricultural areas where full topsoil segregation will require an additional 25 feet totaling a 125-feet-wide construction corridor.

In other limited, non-wetland locations, the construction ROW width may be expanded by up to 50 feet without approval from the FERC for the following situations:

1. To accommodate full construction ROW topsoil segregation;
2. To ensure safe construction where topographic conditions (i.e., side-slopes) or soil limitations exist; and
3. For truck turn-arounds where no reasonable alternative access exits in limited, non-wetland or non-forested areas.

Use of these limited areas is subject to landowner approval and compliance with all applicable survey, mitigation, and reporting requirements.

9.2 Access Roads

To the extent practicable, existing public and private road crossings will be used as the primary means to access the ROW. Additional access points will be necessary beyond those available by use of existing public roads. Preliminarily, PennEast has identified 121 access roads for use during construction of the Project. These access roads include a total length of approximately 32.6 miles. All access road widths will be approximately 30 ft. wide. These access roads use portions of 64 existing roads and construction or enhancement of 40 existing and 17 new access roads. The following access roads are identified by County:

- 37 Access Roads – Luzerne County, Pennsylvania
- 19 Access Roads – Carbon County, Pennsylvania
- 30 Access Roads – Northampton County, Pennsylvania
- 2 Access Roads –Bucks County, Pennsylvania
- 22 Access Roads – Hunterdon County, New Jersey
- 11 Access Roads – Mercer County, New Jersey

Improved access roads will likely require maintenance activities that may include tree branch clearing, gravel placement, and/or access path widening. Moreover, there will be the need to establish temporary staging areas along several access roads. Such areas will serve as places for temporary vehicle parking and/or staging of minor supplies (e.g., hay bales for erosion control activities). Temporary access roads (TARs) for construction will be restored in accordance with landowner agreements. Landowner permission will be obtained for all proposed permanent access roads (PARs).

9.3 Pipe and Contractor Wareyards

Pipe and contractor wareyards are required for storing and staging equipment, pipe, fuel, oil, pipe fabrication, and other construction related materials. PennEast has identified pipeyard for use during construction of the Project. The total area of the pipeyards will be approximately 424.6 acres. A Highway Occupancy Permit (HOP) will be acquired from the Pennsylvania Department of Transportation and New Jersey Department of Transportation for access to the pipeyards.

The Contractor shall perform the following measures at pipe and contractor wareyards:

1. Strip and segregate topsoil in agricultural lands;
2. Install erosion control structures as directed by the EI, outlined in this E&SCP, or identified on the construction drawings, and maintain them throughout construction and restoration activities;
3. Implement and comply with the SPCC Plan; and
4. Restore and revegetate all disturbed areas in accordance with the measures outlined in this E&SCP and as directed by the EI.

9.4 Off-ROW Disturbance

With certain exceptions, which are required in order to comply with FERC Plan and Procedures, all construction activities are restricted to within the limits identified on the construction drawings (exceptions include the installation of waterbars, installation of energy-dissipating devices, installation of dewatering structures, and drain tile repair which are subject to applicable survey requirements). However, in the event that off-ROW disturbance occurs, the following measures will be implemented:

1. The EI will immediately report the occurrence to the Chief Inspector and ROW Agent;

2. The conditions that caused the disturbance will be evaluated by the Chief Inspector and the EI, and they will determine whether work at the location can proceed under those conditions; and
3. If deemed necessary by the Chief Inspector and EI, one or more of the following corrective actions will be taken: immediate restoration of the original contours, seeding and mulching of the disturbed area, and/or installation of erosion control devices. PennEast's Environmental Construction Permitting Department will be notified as soon as practical.

9.5 Construction Sequence

Natural gas pipelines are installed using conventional overland buried pipeline construction techniques. These activities are necessary for the installation of a stable, safe, and reliable transmission facility consistent with DOT requirements and regulations. This section provides an overview of the equipment and operations necessary for the installation of a natural gas pipeline, describes potential impacts that may occur from each operation, and identifies the measures that will be implemented to control these potential impacts. This section also discusses in detail the erosion and sediment control techniques that apply to each construction activity including clearing, grading, trenching, lowering-in of pipe, backfilling, and hydrostatic testing. ROW restoration will be addressed in Section 9.6. The activities listed below are normally performed in the following sequence:

Pipeline Construction - Typical Sequential Operation Steps:

1. Survey/demarcate the route and approved workspace.
2. Centerline survey of existing or proposed pipelines.
3. Clearing – remove vegetation from CWA; installation of erosion and sediment controls.
4. Additional protection of adjacent pipeline, as necessary; grading to establish safe workspace; completion of installation of erosion and sediment controls.
5. Trenching - pipeline trench excavation to design depths.
6. Stringing - placement of pipe joints along the trench line.
7. Bending – bending pipe joints, as needed, for route and terrain.
8. Weld pipe.
9. Pipe integrity - visual inspection, non-destructive examination (NDE) of welds.
10. Weld coating - corrosion protection and waterproofing.
11. Pipe placement - pipe placed in trench, tied to previously laid sections, backfilled.
12. Hydrostatic testing – confirmation of pipeline integrity.
13. In-line tool inspection of new pipeline segments.
14. Tie-in to existing pipeline, purge, pack new section with gas.
15. Grade restore of CWA to previous contours.
16. Final clean-up, restoration, and seeding.

Obstacles to the mainline technique are often encountered and are not considered to be out of the ordinary. These obstacles, which include side hill crossings, rock, wetlands, streams, roads, and residential areas, do not normally interrupt the assembly line flow.

9.5.1 Clearing

Clearing operations will include the removal of vegetation within the construction ROW. Various clearing methods will be employed depending on tree size, contour of the land, and the ability of the ground to support clearing equipment. Vegetative clearing will either be accomplished by hand or by cutting equipment. The following procedures will be standard practice during clearing:

1. Prior to beginning the removal of vegetation, the limits of clearing will be established and identified in accordance with the construction drawings;
2. All construction activities and ground disturbance will be confined to within the ROW shown on the construction drawings;
3. Clearly mark and protect trees to be saved as per landowner requests or as otherwise required;
4. All brush and trees will be felled into the construction ROW to minimize damage to trees and structures adjacent to the ROW. Trees that inadvertently fall beyond the edge of the ROW will be immediately moved onto the ROW and disturbed areas will be immediately stabilized;
5. Trees will be chipped or cut into lengths identified by the landowner and then stacked at the edge of the ROW or removed;
6. Brush and limbs may be disposed of in one or more of the following ways depending on local restrictions, applicable permits, construction Line List stipulations, and landowner agreements:
   a) Stockpiled along the edge of the ROW;
   b) Chipped, spread across the ROW in upland areas, and plowed in; or
   c) Hauled off site.
7. Existing surface drainage patterns will not be altered by the placement of timber or brush piles at the edge of the construction ROW.

9.5.1.1 Thermal Impacts

On this Project, the principal source of thermal impacts would be related to disturbance of vegetative cover. The following provisions related to thermal impacts are included in this E&SC Plan:

- Section 11.2.3 requires minimal disturbance within 50 feet of streams. Section 11.2.6 requires immediate revegetation (or mulch in non-germinating season) when earth disturbing activities are complete.
- Section 11.2.3 limits removal of vegetation, especially tree cover, to only that necessary for construction.

The permanent pipeline right-of-way may be mowed periodically and woody vegetation may be trimmed to allow safe pipeline operation. Some tree cover may be permanently removed in wooded areas. In the long term, it is anticipated the canopy from adjacent woodlands will expand over the pipeline right-of-way to compensate for lost shade.

9.5.2 Installing Temporary Best Management Practices (BMPs)

BMPs, which are temporary erosion controls intended to minimize the flow of sediment and to prevent the deposition of sediments beyond approved workspaces or into sensitive resources, shall be installed following vegetative clearing operations. They may be constructed of materials such as compost filter socks, silt fence, staked straw bales, compacted earth (e.g., drivable berms across travel lanes), sandbags, or an equivalent material as identified by the EI. Where permitted by regulatory agencies, hay bales may be used in lieu of straw bales with the following restrictions**:** hay bales shall not be used for mulching and the Contractor is responsible for their removal and disposal.

Install temporary BMPs at the base of slopes adjacent to road crossings and at waterbody and wetland crossings in accordance with Sections 9.5.4, 9.5.5.1 respectively.

1. Do not stake or trench in place straw bales used on equipment bridges or on mats across the travel lane.

2. Inspect temporary BMPs daily in areas of active construction to ensure proper functioning and maintenance. In other areas, BMPs will be inspected and maintained on a weekly basis throughout construction, and within 24 hours following storm events.
3. Maintain all temporary BMPs in place until permanent revegetation measures are successful or the upland areas adjacent to wetlands, waterbodies, or roads are stabilized.
4. Remove temporary BMPs from an area when replaced by permanent erosion control measures or when the area has been successfully restored as specified in Section 14.1.

9.5.3 Grading

The construction ROW will be graded as needed to provide a level workspace for safe operation of heavy equipment used in pipeline construction. The following procedures will be standard practice during grading.

9.5.3.1 Topsoil Segregation

Topsoil segregation methods will be used in all residential areas and when the construction ROW is wider than 30 feet in cultivated or rotated croplands, managed pastures, hayfields, and other areas at the landowner's or land managing agency's request.

1. Prevent the mixing of topsoil with subsoil by stripping topsoil from either the full work area or from the trench line and subsoil storage area (ditch plus spoil side method) as stipulated in the Construction Contract or Line List.
2. Segregate at least 12 inches of topsoil in deep soils with more than 12 inches of topsoil. In soils with less than 12 inches of topsoil, make every effort to segregate the entire topsoil layer.
3. Where topsoil segregation is required, maintain separation of salvaged topsoil and subsoil throughout all construction activities.
4. For wetlands, segregate the top 12 inches of topsoil within the ditchline, except in areas where standing water is present or soils are saturated.
5. Leave gaps in the topsoil piles for the installation of temporary interceptor dikes to allow water to be diverted off ROW.
6. Topsoil replacement (i.e., importation of topsoil) may be used as an alternative to topsoil segregation if approved by the landowner and PennEast.
7. Never use topsoil for padding the pipe, constructing temporary slope breakers or trench plugs, improving or maintaining roads, or as a fill material.
8. Stabilize topsoil piles and minimize loss due to wind and water erosion with use of BMPs, mulch, temporary seeding, tackifiers, or functional equivalents, where necessary.

9.5.3.2 Tree Stump Removal and Disposal

1. Remove tree stumps in upland areas along the entire width of the permanent ROW to allow adequate clearance for the safe operation of vehicles and equipment. Stumps within the temporary ROW will be removed or ground to a suitable height that will allow the safe passage of equipment, as stipulated by the Chief Inspector or EI.
2. Dispose of stumps by one of the following methods, pending approval by the Chief Inspector and the landowner, and in accordance with regulatory requirements:
   - Moved to PennEast-approved off-site location (except in wetlands and agricultural areas);

- Chipped on-site and removed. Chipped material not removed from the site may be spread across the upland areas of the CWS in a manner that will not inhibit revegetation or broadcast into off-ROW and stable areas. Wood chips will not be left within agricultural lands, wetlands, or within 50 feet of wetlands. Wood chips will not be stockpiled in a manner that they may be transported into a wetland.
- Ground to grade in wetlands, excess chips will be removed for proper disposal.

9.5.3.3 Rock Disposal

When rock is encountered it will be broken up either by drilling, pneumatic hammer or blasting. If blasting is required PennEast will conduct pre-blast surveys with landowner permission to assess the condition of structures, wells, springs and utilities within 150 feet. Blasting will follow all procedures and safety measures according to PennEast's Blasting Plan.

Rock (including blast rock) will be disposed of in one or more of the following ways:

1. Buried on the ROW or in approved construction work areas either in the ditchline or as fill during grade cut restoration in accordance with the Construction specifications. In cultivated/agricultural lands, wetlands, and residential areas, rock may only be backfilled to the top of the existing bedrock profile;
2. Windrowed per written landowner agreement with PennEast;
3. Removed and disposed of at a PennEast approved site

9.5.4 Installing Temporary Waterbars

Temporary waterbars, which are temporary erosion control measures intended to reduce runoff velocity and divert water off the construction ROW, shall be installed following grading operations. The waterbars are to be installed on all disturbed areas as necessary to avoid excessive erosion. Temporary waterbars may be constructed of materials such as compacted soil, silt fence, staked straw bales or sand bags. If permitted by regulatory agencies, hay bales may be used in lieu of straw bales with the following restrictions: hay bales shall not be used for mulching and the Contractor is responsible for their removal and disposal.

Temporary waterbars must be installed on slopes greater than 5 percent where the base of the slope is less than 50 feet from waterbody, wetland or road crossing at the spacing indicated below (closer spacing should be used if necessary). Where the base of the slope is equal or greater than 50 feet from a waterbody, wetland, or road crossing, install waterbars at spacing necessary to avoid excessive erosion.

9.5.5 Trenching

The trench centerline will be staked after the construction ROW has been prepared. In general, a trench will be excavated to a depth that will permit burial of the pipe with a minimum of 3 feet of cover. Overland trenching may be accomplished using a conventional backhoe or a rotary wheel-ditching machine. In shale or rocky areas where the use of the wheel-ditching machine is limited, a tractor-drawn ripper will be employed to break and loosen hard substratum material. In areas where rock cannot be ripped, drilling and blasting may be required. A backhoe may then be used to remove rock and soil from the ditch.

The following procedures will be standard practice during ditching:

1. Flag drainage tiles damaged during ditching activities for repair; and
2. Place spoil at least 10 feet from the edge of waterbodies. Spoil will be contained with erosion and sediment control devices (BMPs) to prevent spoil materials or heavily silt-laden water from transferring into waterbodies and wetlands or off of the ROW.

9.5.5.1 Temporary Trench Plugs

1. Temporary trench plugs may consist of unexcavated portions of the trench, compacted subsoil, sandbags, or some functional equivalent.
2. Position temporary trench plugs, as necessary, to reduce trenchline erosion and minimize the volume and velocity of trench water flow at the base of slopes.
3. Do not use topsoil for installing temporary soft trench plugs.
4. Coordinate with the landowner to identify optimal locations for the placement of temporary hard trench plugs designed to provide access for livestock.
5. Temporary trench plugs may be used in conjunction with interceptor dikes to prevent water in the trench from overflowing into sensitive resource areas. Attempt to divert trench overflow to a well-vegetated off-ROW location or construct an energy-dissipating device.

9.5.6 Trench Dewatering

Trench dewatering may be periodically required along portions of the proposed pipeline prior to and/or subsequent to installation of the pipeline to remove collected water from the trench.

1. Trench dewatering will be conducted (on or off the construction ROW) in such a manner that does not cause erosion and does not result in silt-laden water flowing into any waterbody or wetland.
2. The intakes of the hoses used to withdraw the water from the trench will be elevated and screened to minimize pumping of deposited sediments.
3. Water may be discharged into areas where adequate vegetation is present adjacent to the construction ROW to function as a filter medium.
4. Where vegetation is absent or in the vicinity of waterbody/ wetland areas, water will be pumped into a filter bag or through a structure composed of BMPs. When using filter bags, secure the discharge hose to the bag with a clamp.
5. Remove dewatering structures as soon as practicable after the completion of dewatering activities.

9.5.7 Pipe Installation

The following sections describe how the pipe will be installed for the PennEast Pipeline Project. A more detailed description of pipe installation is provided in Resource 1 Section 1.5.1.

9.5.7.1 Stringing and Bending

Following trench excavation, pipe sections will be delivered to the construction site by truck or tracked vehicle, and strung out along the trench. Individual pipe sections will be placed on temporary supports or wooden skids and staggered to allow room for work on the exposed ends. Certain pipe sections will be bent, as necessary, to conform to changes in slope and direction of the trench.

9.5.7.2 Welding and Weld Inspection

Once the bending operation is complete, the pipe sections will be welded together on supports using approved welding procedures that comply with Company welding specifications. After welding, the welds will be inspected radiographically or ultrasonically to ensure their structural integrity

9.5.7.3 Lowering-in

Lowering-in consists of placing the completed pipeline sections into the trench where a tie-in weld will be made. Lowering-in is usually accomplished with two or more sideboom tractors acting in unison and spaced so as not to buckle or otherwise damage the pipe. The pipeline will be lifted from the supports, swung out over the trench, and lowered directly into the trench. The equipment uses a "leap frogging" technique requiring sufficient area to safely move around other tractors within the construction ROW to gain an advanced position on the pipe.

9.5.8 Backfilling

Backfilling consists of covering the pipe with the earth removed from the trench or with other fill material hauled to the site when the existing trench spoil is not adequate for backfill. Backfilling will follow lowering-in of the pipeline as close as is practical.

In areas where the trench bottom is irregularly shaped due to consolidated rock or where the excavated spoil materials are unacceptable for backfilling around the pipe, padding material may be required to prevent damage to the pipe. This padding material will generally consist of sand or screened spoil materials from trench excavation.

1. Under no circumstances shall topsoil be used as padding material.
2. Excess rock, including blast rock, may be used to backfill the trench to the top of the existing bedrock profile in accordance with Company specifications. Rock that is not used to backfill the trench will be treated as described in Section 9.5.3.3.
3. Any excess material will be spread within the ROW in upland areas and land contours will be roughed-in to match adjacent topography.
4. The trench may be backfilled with a crown over the pipe to compensate for compaction and settling. Openings will be left in the completed trench crown to restore pre-construction drainage patterns. Crowning shall not be used in wetland areas.

9.5.8.1 Permanent Trench Plugs

Permanent trench plugs are intended to slow subsurface water flow and erosion along the trench and around the pipe in sloping terrain. Permanent trench plugs will be constructed with sand bags or an equivalent as identified in the permit requirements. On severe slopes greater than 30 percent, "Sakrete" may be used at the discretion of the Chief Inspector. Topsoil shall not be used to construct trench plugs. Permanent trench plugs, which are used in conjunction with waterbars (slope breakers), shall be installed at the locations shown on the construction drawings or as determined by the EI. Trench plugs shall be installed at the base of slopes adjacent to waterbodies and wetlands, and where needed to avoid draining of a resource.

9.5.9 Hydrostatic Testing

Once the pipeline is completed and before it is placed into service, it will be hydrostatically tested for structural integrity in accordance with FERC regulators. Hydrostatic testing involves filling the pipeline with clean water and maintaining a test pressure in excess of normal operating pressures. The testing procedure involves filling the pipeline with test water, performing the pressure test, and discharging the test water. A Hydrostatic Discharge Permit will be obtained from the Pennsylvania Department of Environmental Protection (PADEP) and the New Jersey Department of Environmental Protection (NJDEP) prior to hydrostatic testing. PennEast intends on securing applicable water withdrawal permits from the Susquehanna River Basin Commission and the Delaware River Basin Commission.

1. The EI shall notify the agencies of the intent to use specific test water sources at least 48 hours before testing activities.
2. Pumps used for hydrostatic testing within 100 feet of any waterbody or wetland shall be operated and refueled in accordance with the SPCC Plan.
3. Use only the water sources identified in the Clearance Package/Permit Book.
4. Locate hydrostatic test manifolds outside wetlands and riparian areas to the greatest extent practical.
5. For an overland discharge of test water, dewater into an energy dissipation device constructed of straw bales and absorbent booms. If required by the appropriate permitting agency, the test water may be discharged through an appropriate filtration system including frac tanks and/ or carbon filters.
6. Dewater only at the locations shown on the construction drawings or locations identified in the Hydrostatic Test Package.
7. Locate all dewatering structures in a well-vegetated and stabilized area, if practical, and attempt to maintain at least a 50-foot vegetated buffer from adjacent waterbody/wetland areas. If an adequate buffer is not available, BMPs or similar erosion control measure must be installed.
8. Regulate discharge rate, use energy dissipation device(s), and install BMPs, as necessary, to prevent erosion, streambed scour to aquatic resources, suspension of sediments, flooding or excessive stream flow.
9. The EI shall sample and test the source water and discharge water in accordance with the permit requirements.

9.6 ROW Restoration and Final Cleanup

Restoration of the ROW will begin after pipeline construction activities have been completed. Restoration measures include the re-establishment of final grades and drainage patterns as well as the installation of permanent erosion and BMPs to minimize post-construction erosion. Residential areas will be restored in accordance with Section 10.3.3. Property shall be restored as close to its original condition as practical unless otherwise specified by the landowner.

1. The Contractor shall make every reasonable effort to complete final cleanup of an area (including final grading and installation of permanent erosion control structures) within 20 days after backfilling the trench in that area (within 10 days in residential areas). If seasonal or other weather conditions prevent compliance with these time frames, maintain temporary erosion controls (temporary slope breakers, BMPs, and mulch) until conditions allow completion of cleanup.
2. The disturbed ROW will be seeded within 6 working days of final grading, weather and soil conditions permitting.
3. If final cleanup and seeding cannot be completed and is delayed until the next recommended growing season, the winter stabilization measures in Section 9.6.4 shall be followed.
4. Grade the ROW to pre-construction contours.
5. Spread segregated topsoil back across the graded ROW to its original profile.
6. Remove excess rock from at least the top 12 inches of soil to the extent practical in all rotated and cultivated cropland, hayfields, managed pastures, residential areas, and other areas at the landowner's request. The size, density, and distribution of rock on the construction ROW should be similar to adjacent areas not disturbed by construction. The landowner or land management agency may approve other provisions in writing.

7. A travel lane may be left open temporarily to allow access by construction traffic if the temporary erosion control structures are installed, regularly inspected and maintained. When access is no longer required, the travel lane must be removed and the ROW restored.
8. Remove all construction debris from all construction work areas unless the landowner or land managing agency approves leaving materials onsite for beneficial reuse, stabilization, or habitat restoration.
9. Remove temporary BMPs when replaced by permanent erosion control measures or when revegetation is successful per permit requirements.

9.6.1 Permanent Erosion Control

9.6.1.1 Permanent Waterbars

Permanent waterbars are intended to reduce runoff velocity, divert water off the construction ROW, and prevent sediment deposition into sensitive resources. Permanent waterbars will be constructed of compacted soil. Stone or some functional equivalent may be used when directed by the EI.

1. Install permanent waterbars in all areas, except cultivated areas and lawns, at the locations shown on the construction drawings or as directed by the EI. Installation shall be in conformance with Figure 15.
2. Install permanent waterbars across the entire ROW at all waterbody and wetland crossings, and at the base of slopes adjacent to roads. When the ROW parallels an existing utility ROW, permanent waterbars may be installed to match existing waterbars on the adjacent undisturbed pipeline ROW.
3. Construct waterbars with a 2 to 8 percent outslope to divert surface flow to a stable vegetative area without causing water to pool or erode behind the interceptor dike. In the absence of a stable vegetative area, install an energy-dissipating device at the end of the interceptor dike.
4. Install a rock-lined drainage swale along the ROW with restricted drainage features when directed by the EI.
5. On slopes greater than 30 percent, install waterbars with erosion control blanket on the swale side.

9.6.1.2 Erosion Control Blanket

1. Install erosion control fabric at waterbar outlets and drainage swales as necessary or as directed by the EI.
2. Install erosion control blanket or matting on slopes greater than 30 percent adjacent to roads or waterbodies. Anchor the erosion control blanket or matting with staples or other appropriate devices in accordance with the manufacturers' recommendations.
3. The EI will direct the installation of high-velocity erosion control blanket on the swale side of permanent waterbars.

9.6.2 Revegetation and Seeding

Successful revegetation of soils disturbed by project-related activities is essential. Seeding will be conducted using the following requirements:

1. Fertilize and add soil pH modifiers in accordance with the recommendations in the E&SCP. Incorporate recommended soil pH modifier and fertilizer into the top 2 inches of soil as soon as practical after application;

2. Seed all disturbed areas within 6 working days of final grading, weather and soil conditions permitting;
3. Prepare seedbed in disturbed areas to a depth of 3 to 4 inches to provide a firm seedbed. When hydroseeding, scarify the seedbed to facilitate lodging and germination of seed;
4. Seed disturbed areas in accordance with the seed mixes, rates, and dates in the E&SCP, except in upland areas where landowners or a land management agency may request alternative seed mixes. Seeding is not required in cultivated croplands unless requested by the landowner.
5. Perform seeding of permanent vegetation within the recommended seeding dates as outlined in The E&SCP. If seeding cannot be done within those dates, use appropriate temporary erosion control measures discussed in Section 9.5.2 and perform seeding of permanent vegetation at the beginning of the next recommended seeding season. Dormant seeding or temporary seeding of annual species may also be used, if necessary, to establish cover, as approved by the Environmental Inspector. Mulch in accordance with Section 9.6.3. Lawns may be seeded on a schedule established with the landowner;
6. Base seeding rates on Pure Live Seed (PLS). Use seed within 12 months of seed testing;
7. Treat legume seed with an inoculant specific to the species using the manufacturer's recommended rate of inoculant appropriate for the seeding method (broadcast, drill, or hydroseeding); and
8. Uniformly apply and cover seed in accordance with the E&SCP. In the absence of any recommendations from the local soil conservation authorities, landowner, or land managing agency to the contrary. A seed drill equipped with a cultipacker is preferred for application, but broadcast or hydroseeding can be used at double the recommended seeding rates. Where seed is broadcast, firm the seedbed with a cultipacker or roller after seeding. In rocky soils, or where site conditions may limit the effectiveness of this equipment, other alternatives may be appropriate (e.g., use of a chain drag) to lightly cover seed after application, as approved by the EI.

9.6.3 Mulch

Mulch is intended to stabilize the soil surface and shall consist of weed-free straw or hay, wood fiber hydromulch, erosion control blanket, or some functional equivalent as approved by the EI and Chief Inspector. Hay shall not be used for mulch.

1. Mulch all disturbed upland areas (except cultivated cropland) **before** seeding if:
   a) Final cleanup, including final grading and installation of permanent erosion control measures, is not completed in an area within 20 days after the trench in that area is backfilled (10 days in residential areas); or
   b) Construction or restoration activity is interrupted for extended periods, such as when seeding cannot be completed due to seeding period restrictions.

NOTE: When mulching before seeding, increase mulch application on all slopes within 100 feet of waterbodies and wetlands to a rate of 3 tons/acre of straw or equivalent.

1. Apply mulch on all slopes (except in cultivated cropland) concurrent with or immediately after seeding, where necessary, to stabilize the soil surface and to reduce wind and water erosion. Spread mulch uniformly over the ROW at a rate of 2 tons/acre of straw or equivalent.
2. Mulch with woodchips only under the following conditions with prior approval from PennEast and the EI:
   a) Do not use more than 1 ton/acre; and

b) Add the equivalent of 11 lbs/acre available nitrogen (at least 50 % of which is slow release).

3. Ensure that mulch is anchored to minimize loss by wind and water. Anchoring may be achieved by wet soil conditions (when approved by the EI), mechanical means, or with liquid mulch binders.
4. When anchoring with liquid mulch binders, use rates recommended by the manufacturer. **Do not use liquid mulch binders within 100 feet of wetlands and waterbodies,** except where product is certified environmentally non-toxic by the appropriate state or federal agency or independent standards-setting organization**.**
5. Do not use synthetic monofilament mesh/netted erosion control materials in areas designated as sensitive wildlife habitat, unless the product is specifically designed to minimize harm to wildlife. Biodegradable or photodegradable backed erosion control blankets will be used in these areas as needed. Anchor the erosion control blanket with staples or other appropriate devices.

9.6.4 Winter Stabilization

In the event that the final phases of construction or restoration occur too late in the year for cleanup activities to adequately proceed, the following procedures will be implemented along the disturbed ROW at those locations until final restoration measures can be completed.

1. Install permanent interceptor dikes at specified intervals on all slopes, or as directed by the EI;
2. Install temporary BMPs adjacent to stream and wetland crossings, as well as other critical areas;
3. Seed and mulch the ROW and seed segregated topsoil piles in accordance with the E&SCP; and Remove flumes from waterbody crossings to reestablish natural stream flow.

PennEast will file for review and written approval from the FERC, a winterization plan if construction continues into the winter season where conditions could delay successful decompaction, topsoil replacement, or seeding until the following spring.

9.6.5 Winter Construction Plans

If construction is planned to occur during winter weather conditions, PennEast will develop and file a project-specific winter construction plan with the FERC. The plan shall address:

1. Winter construction procedures (e.g., snow handling and removal, access road construction and maintenance, soil handling under saturated or frozen conditions, topsoil stripping);
2. Stabilization and monitoring procedures if ground conditions will delay restoration until the following spring (e.g., mulching and erosion controls, inspection and reporting, stormwater control during spring thaw conditions); and
3. Final restoration procedures (e.g., subsidence and compaction repair, topsoil replacement, seeding).

9.7 Unauthorized Vehicle Access to ROW

PennEast will offer to install and maintain measures to control unauthorized vehicle access to the ROW based on requests by the manager or owner of forested lands. These measures may include:

- Signs;
- Fences with locking gates;
- Slash and timber barriers, pipe barriers, or a line of boulders across the ROW; or
- Conifers or other appropriate shrubs with a mature height of 4 feet or less across the ROW.

10.0 SPECIAL CONSTRUCTION METHODS

PennEast will utilize the following specialized construction procedures for agricultural areas, road crossings, and residential areas along the pipeline project. The project construction drawings, Line Lists, and Construction Contract will indicate the locations where specialized construction methods will be used.

10.1 Agricultural Areas

10.1.1 Drain Tiles

1. Attempt to locate existing drain tiles and irrigation systems and also determine (via landowner) future drain tiles that are likely to be installed within 3 years of the authorized construction.
2. Develop procedures for constructing through drain tiled areas, maintaining irrigation systems during construction, and repairing drain tiles and irrigation systems after construction.
3. Engage qualified drain tile specialists, as needed, to conduct or monitor repairs to drain tile systems affected by construction. Use drain tile specialist from the project area, if available.
4. Repair damaged drain tiles to their original condition. Filter-covered drain tiles may not be used unless the local soil conservation authorities and the landowner agrees in writing prior to construction.
5. Ensure that the depth of cover over the new pipeline is sufficient to avoid interference with drain tile systems (existing or proposed). For adjacent pipeline loops in agricultural areas, install the new pipeline with at least the same depth of cover as the existing pipeline(s).

10.1.2 Irrigation

1. Maintain water flow in crop irrigation systems, unless shutoff is coordinated with affected parties.
2. Repair any damage to the systems as soon as practical.

10.1.3 Soil Compaction Mitigation

1. Test topsoil and subsoil for compaction at regular intervals in agricultural areas disturbed by construction activities. Conduct tests on the same soil type under similar moisture conditions in undisturbed areas to identify approximate preconstruction conditions. Use penetrometers or other appropriate devices to conduct tests.
2. Plow severely compacted agricultural areas with a paraplow or other deep tillage implement. In areas where topsoil has been segregated, plow the subsoil before replacing the segregated topsoil. If subsequent construction and cleanup activities result in further compaction, conduct additional tilling.

10.2 Road Crossings

Unpaved private and public roads supporting minimal traffic volumes are usually crossed by boring or by means of an open cut, if this method is approved by the owner or appropriate road management agency. An open cut crossing may involve closing the road to all traffic and constructing an adequate detour around the crossing area, or excavating one-half of the road at a time allowing through traffic to be maintained.

The trench for an open cut crossing is excavated with a backhoe or similar equipment, all backfill is compacted, and the road resurfaced. All state, national, and interstate highways as well as all railroads must be crossed by

boring, unless the crossing permit allows an open cut crossing. Access roads shall be used in accordance with Section 9.2.

10.3 Residential Areas

10.3.1 Construction Procedures

Specialized construction procedures will be utilized in areas of heavy residential or commercial/ industrial congestion where residences or business establishments are located within 50 feet of construction work areas.

1. Install safety fence at the edge of the construction ROW for a distance of 100 feet on either side of the residence or business establishment.
2. Attempt to maintain a minimum distance of 25 feet between any residence/business establishment and the edge of the construction work area for a distance of 100 feet on either side of the residence/business establishment.
3. Avoid removal of mature trees and landscaping within the construction work area unless necessary for safe operation of construction equipment, or as specified in landowner agreements.
4. Restore all lawn areas and landscaping immediately following cleanup operations, or as specified in landowner agreements.
5. If seasonal or other weather conditions prevent compliance with these time frames, maintain and monitor temporary erosion controls (BMPs and mulch) until conditions allow completion of restoration.

10.3.2 Construction Techniques

In addition to the previously identified specialized procedures, smaller "spreads" of labor and equipment, operating independent of the mainline work force, will utilize either the stove pipe or drag section pipeline construction techniques in those areas of congestion where a minimum distance of 25 feet cannot be maintained between the residence (or business establishment) and the edge of the construction work area. In no case shall the temporary work area be located within 10 feet of a residence unless the landowner agrees in writing, or the area is within the existing maintained ROW. The following techniques shall be utilized for a distance of 100 feet on either side of the residence or business establishment at the locations identified in the Construction Contract and/or Line List.

1. The stove pipe construction technique is a less efficient alternative to the mainline method of construction, typically used when the pipeline is to be installed in very close proximity to an existing structure or when an open trench would adversely impact a commercial/industrial establishment. The technique involves installing one joint of pipe at a time whereby the welding, weld inspection, and coating activities are all performed in the open trench. At the end of each day after the pipe is lowered-in, the trench is backfilled and/or covered with steel plates or timber mats. The length of excavation performed each day cannot exceed the amount of pipe installed.
2. The drag section construction technique, while less efficient than the mainline method, is normally preferred over the stove pipe alternative. This technique involves the trenching, installation, and backfill of a prefabricated length of pipe containing several segments all in one day. At the end of each day after the pipe is lowered-in, the trench is backfilled and/or covered with steel plates or timber mats. Use of the drag section technique will typically require adequate staging areas outside of the residential and/or commercial/industrial congestion for assembly of the prefabricated sections.

10.3.3 Cleanup and Restoration

1. Reseed all disturbed lawns with a seed mixture acceptable to landowner or comparable to the adjoining lawn.
2. Landowners shall be compensated for damages to ornamental shrubs and other landscape plantings.
3. Landowners shall be compensated for damages in a fair and reasonable manner, and as specified in the damage provision within the controlling easement on each property.

11.0 WATERBODY CROSSINGS

The following section describes the construction procedures and mitigation measures that will be used for pipeline installations at waterbodies. The intent of these procedures is to minimize the extent and duration of project related disturbances within waterbodies.

11.1 Waterbody Definitions

The term "**waterbody"** as used in this E&SCP includes any natural or artificial stream, river, or drainage with perceptible flow at the time of crossing, and other permanent waterbodies such as ponds and lakes. In this E&SCP, waterbodies are characterized into three main categories depending on the width of the waterbody. The categories are as follows:

- A **"minor waterbody"** includes all waterbodies less than or equal to 10 feet wide at the water's edge at the time of construction.
- An "**intermediate waterbody"** includes all waterbodies greater than 10 feet wide but less than or equal to 100 feet wide at the water's edge at the time of construction.
- A "**major waterbody"** includes all waterbodies greater than 100 feet wide at the water's edge at the time of construction.
- A "**state designated waterbody**" includes all regulated waterbodies by the state.
- A "**non-state designated waterbody**" includes non-regulated waterbodies such as agricultural ditches.

The waterbody crossing procedures described in this E&SCP comply with the Section 404 Nationwide permit program terms and conditions (33 CFR Part 330).

11.2 General Waterbody Procedures

Pipeline construction across waterbody channels may result in short term water quality impacts. Decisions regarding waterbody crossing techniques will be based on agency consultations and permit conditions. Mobilization of construction equipment, trench excavation, and backfilling will be performed in a manner that will minimize the potential for erosion and sedimentation within the waterbody channel. Erosion control measures will be implemented to confine water quality impacts within the immediate construction area and to minimize impacts to downstream areas. The length of the crossing, the sensitivity of the area, existing conditions at the time of the crossing, and permit requirements will determine the most appropriate measures to be used.

11.2.1 Time Window for Construction

Construction restriction time windows for fisheries of special concern at waterbody crossings must be followed unless written approval is obtained from the PFBC Division of Environmental Services, National Marine

Fisheries Service (NMFS) or the NJDEP. Refer to Resource Report 3 for the preliminary identified construction restrictions.

11.2.2 Temporary Equipment Bridges

A temporary equipment bridge is a structure that may be installed across a waterbody to provide a means for construction equipment to cross the stream while minimizing impacts to the channel bottom or banks.

1. Until the equipment bridge is installed, only clearing equipment and equipment necessary for installation of equipment bridges may cross the waterbody and the number of crossings shall be limited to one crossing per piece of equipment, unless otherwise authorized by the appropriate permitting agency.
2. Construct equipment bridges to maintain unrestricted flow and to prevent soil from entering the waterbody. Examples of such bridges include:
   a) Equipment pads and culverts
   b) Clean crushed stone and culverts
   c) Flexi-float or portable bridges
   d) Equipment pads or railroad car bridges without culverts
3. Construct crossings as close to perpendicular to the axis of the waterbody channel.
4. Design and maintain each equipment bridge to withstand the highest flows that would occur. Align culverts/flumes to prevent bank erosion or streambed scour. If necessary, install energy dissipating devices downstream of the culverts.
5. Do not use soil to construct or stabilize equipment bridges.
6. Design and maintain equipment bridges to prevent soil from entering the waterbody.
7. Remove temporary equipment bridges as soon as practicable after permanent seeding.
8. If there will be more than 1 month between final cleanup and the beginning of permanent seeding and reasonable alternative access to the ROW is available, remove equipment bridges as soon as practical after final cleanup.
9. Obtain any necessary permits from the USACE, the PADEP, or the NJDEP for permanent bridges.

11.2.3 Clearing and Grading

1. Confine construction activities and ground disturbance to within the ROW boundaries shown on the construction drawings.
2. Restrict extra work areas (such as staging areas and additional spoil storage areas) to those shown only on the construction drawings. All extra work areas must be located at least 50 feet away from the water's edge, except where the adjacent upland consists of cultivated or rotated cropland or other disturbed land. If site-specific conditions do not permit a 50-foot setback, PennEast can receive written approval from the FERC to locate these extra work areas closer than 50 feet from the water's edge.
3. If the pipeline parallels a waterbody, PennEast will typically maintain at least 15 feet of undisturbed vegetation between the waterbody (and any adjacent wetland) and the ROW.
4. Clear the ROW adjacent to all waterbodies *up to the high water bank* (where discernible).
5. Immediately remove all cut trees and branches that inadvertently fall into a waterbody and stockpile in an upland area on ROW for disposal.

6. Grade the ROW adjacent to waterbodies *up to within 10 feet of the high water bank*, leaving an ungrubbed vegetative strip intact.
7. Clearing and grading operations may proceed through the 10-foot vegetative strip **only on the working side of the ROW** in order to install the equipment bridge and travel lane. Use temporary BMPs to prevent the flow of bank spoil into the waterbody.
8. Maintain adequate flow rates to protect aquatic life and prevent the interruption of existing downstream uses.

11.2.4 Installing Temporary Erosion and Sediment Control

1. Install BMPs immediately after initial disturbance of the waterbody or adjacent upland. BMPs must be properly maintained throughout construction and reinstalled as necessary (such as after backfilling of the trench), until replacement by permanent erosion controls or restoration of adjacent upland areas is complete.
2. Install BMPs across the entire construction ROW at all waterbody crossings, where necessary to prevent the flow of sediments into the waterbody. Temporary or removable BMPs such as interceptor dikes or drivable berms may be used in lieu of BMPs in front of equipment bridges or timber mats across the travel lane.

These temporary BMPs can be removed during the construction day, but must be reinstalled after construction has stopped for the day and/or when heavy precipitation is imminent.

1. Install BMPs as necessary along the edge of the construction ROW to contain spoil within the ROW and prevent sediment flow into the waterbody where waterbodies are adjacent or parallel to the construction ROW and the ROW slopes toward the waterbody.
2. Use temporary trench plugs at all waterbody crossings to prevent diversion of water into upland portions of the pipeline trench and to keep any accumulated trench water out of the waterbody. Trench plugs shall be of sufficient size to withstand upslope water pressure.

11.2.5 Various Types of Crossings

PennEast proposes to cross waterbodies with flow at the time of construction using a combination of horizontal directional drilling (HDD) and dry-crossing methods, as described below. Major waterbody crossing construction methods are discussed in further detail below.

Generally during crossings, the full width of the construction ROW will be used on either side of the waterbody for construction staging and pipeline fabrication. Extra temporary construction workspace may be required in some situations and will be located in upland areas a minimum of 50 ft from the waterbody, whenever possible; certain crossings may require extra workspace in closer proximity to the waterbody.

11.2.5.1 General Crossing Procedures

1. Dewater trench in accordance with the procedures described in Section 9.5.6.
2. For minor waterbodies:
   a) Place all spoil from the waterbody within the construction ROW at least 10 feet from the water's edge or in the extra work areas shown on the construction drawings. Use BMPs to prevent flow of spoil or heavily silt-laden water into the waterbody.
3. For intermediate waterbodies:

a) Less than 30 feet in width, place all spoil from the waterbody within the construction ROW at least 10 feet from the water's edge or in the extra work areas shown on the construction drawings. Use BMPs to prevent flow of spoil or heavily silt-laden water into the waterbody.

b) Greater than 30 feet in width, spoil may be temporarily sidecast into the waterbody provided that site specific approval is received from the PADEP.

4. For major waterbodies:

   a) Place all upland bank spoil from the waterbody within the construction ROW at least 10 feet from the water's edge or in the extra work areas shown on the construction drawings. Use BMPs to prevent flow of spoil or heavily silt laden water into the waterbody.

5. Restore and stabilize the banks and channel in accordance with Section 11.2.6.

6. Crossing of waterbodies when they are dry or frozen and not flowing may proceed using standard upland construction techniques, provided that the EI verifies that water is unlikely to flow between initial disturbance and final stabilization of the feature. In the event of perceptible flow, PennEast will comply with all applicable Procedure requirements for "waterbodies" as defined in Sections 11.2.5.2 and11.2.5.3 of this E&SCP.

11.2.5.2 Flumed Crossing

The flumed crossing method utilizes a flume pipe(s) to transport stream flow across the disturbed area and allows trenching to be done in drier conditions. The flume pipe(s) installed across the trench will be sized to accommodate anticipated stream flows. This method is utilized for perennial waterbodies (minor and intermediate) up to 30 feet wide that are state designated fisheries including coldwater fisheries and warmwater fisheries considered significant by the state. Flumes are generally not recommended for use on a watercourse with a broad unconfined channel, unstable banks, a permeable substrate, excessive stream flow, or where the installation and construction of the flume crossing will adversely affect the bed or banks of the stream.

1. Cross all minor waterbodies that are as identified in the Clearance Package/ Permit Book, using a dry crossing technique.

2. All construction equipment must cross state-regulated waters on an equipment bridge as specified in Section 11.2.2.

3. The flumed crossing shall be installed as follows:

   a) Install flume pipe(s) after blasting and other rock breaking measures (if required), but before trenching;

   b) Properly align flume pipe(s) to prevent bank erosion and streambed scour;

   c) Use sand bags or equivalent dam diversion structure to provide a seal at either end of the flume to channel water flow (some modifications to the stream bottom may be required to achieve an effective seal);

   d) **Do not remove flume pipe during trenching**, pipe laying (thread pipe underneath the flume pipe(s)), or backfilling activities, or initial streambed restoration efforts unless authorized by agency permits; and

   e) Remove all flume pipes and dams that are not also part of the equipment bridge as soon as final cleanup of the stream bed and bank is complete.

11.2.5.3 Dam and Pump Crossing

The dam and pump method is presented as an alternative dry crossing procedure to the flumed crossing. The dam and pump crossing is accomplished by utilizing pumps to transport stream flow across the disturbed

area. This method involves placing sandbags across the existing stream channel upstream from the proposed crossing to stop water flow and downstream from the crossing to isolate the work area. Pumps are used to pump the water across the disturbed area and back into the stream further downstream. The dam and pump procedure allows for more space and flexibility during trenching and pipe installation, which shortens the duration of time spent at the waterbody.

1. The dam and pump method may be used for crossings of waterbodies where pumps can adequately transfer stream flow volumes around the work area, and where there are no concerns about sensitive species passage.
2. Implementation of the dam and pump crossing method will meet the following performance criteria:
   a) Use sufficient pumps, including onsite backup pumps, to maintain downstream flows;
   b) Construct dams with materials that prevent sediment and other pollutants from entering the waterbody (e.g., sandbags or clean gravel with plastic liner);
   c) Screen pump intakes to minimize entrainment of fish;
   d) Prevent streambed scour at pump discharge; and
   e) Continuously monitor the dam and pumps to ensure proper operation throughout the waterbody crossing.
3. The dam and pump crossing shall be installed as follows:
   a) Install and properly seal sandbags at the upstream and downstream location of the crossing;
   b) Create an in-stream sump using sandbags if a natural sump is unavailable for the intake hose;
   c) Initiate pumping of the stream around the work area prior to excavating the trench;
   d) Screen all intake hoses to prevent the entrainment of fish and other aquatic life;
   e) Direct all discharges from the pumps through energy dissipaters to minimize scour and siltation;
   f) Monitor pumps at all times until construction of the crossing is completed; and
   g) Following construction, remove the equipment crossing and sandbag dams.
   h) Construct the crossing in accordance with the measures contained in this E&SCP to the maximum extent practical.

11.2.5.4 Horizontal Directional Drill

For each waterbody or wetland that would be crossed using the HDD method, a site specific plan will be implemented that includes:

1. Site-specific construction diagrams that show the location of mud pits, pipe assembly areas, and all areas to be disturbed or cleared for construction;
2. Justification that disturbed areas are limited to the minimum needed to construct the crossing;
3. Identification of any aboveground disturbance or clearing between the HDD entry and exit workspaces during construction;
4. A description of how an inadvertent release of drilling mud would be contained and cleaned up; and
5. A contingency plan for crossing the waterbody or wetland in the event the HDD is unsuccessful and how the abandoned drill hole would be sealed, if necessary.

11.2.6 Restoration

For waterbody crossings, the preferred restoration method is to achieve final grade and restore the waterbody, its banks, and 50-foot buffers within 24 hours of backfilling. If conditions do not permit the preferred method, the construction work area not in use for access will be promptly rough graded and stabilized with a temporary seed mix. **Do not use liquid mulch binders within 100 feet of wetlands and waterbodies,** except where product is certified environmentally non-toxic by the appropriate state or federal agency or independent standards-setting organization**.**

1. For each waterbody crossing, a permanent waterbar/slope breaker and a trench plug will be installed at the base of slopes near the waterbody.
2. Return all waterbody banks to preconstruction contours or to stable angle of repose as approved by the EI.
3. Install erosion control fabric or a functional equivalent on waterbody banks at the time of final bank recontouring. Do not use synthetic monofilament mesh/netted erosion control materials in areas designated as sensitive wildlife habitat unless the product is specifically designed to minimize harm to wildlife. Anchor erosion control fabric with staples or other appropriate devices.
4. Use clean gravel or native cobbles for the upper 12 inches of trench backfill in all waterbodies identified in the Clearance Package/Permit Book.
5. Limit the placement of riprap to the slopes along the disturbed waterbody crossing.
6. Install erosion control fabric anchored with staples or other appropriate devices along waterbodies with low flow conditions.
7. Revegetate disturbed riparian areas with conservation grasses and legumes in accordance with the recommended Upland Seed Mix in Figure 39 on Drawing No. 000-03-09-007. In the event that final cleanup is deferred more than 20 days after the trench is backfilled, all slopes within 100 feet of waterbodies shall be mulched with 3 tons/acre of straw. Liquid mulch binders will not be used within 100 feet of waterbodies.
8. Remove all temporary BMPs when replaced by permanent erosion controls or when restoration of adjacent upland areas is successful as specified in Section 14.1.

Install a permanent waterbar/slope breaker and a trench plug at the base of slopes near each waterbody crossed. Locate the trench plug immediately upslope of the interceptor dike. Permanent waterbars may not be installed in agricultural areas.

12.0 WETLAND CROSSINGS

The term "**Wetland**" as used in this E&SCP includes any area that satisfies the requirements of the current Federal methodology for identifying and delineating wetlands. Wetland areas have been delineated prior to construction and are identified on the construction drawings.

The wetland crossing procedures described in this Plan will comply with USACE, PADEP, and NJDEP permit terms and conditions. The requirements outlined below do not apply to wetlands in cultivated or rotated cropland. Standard upland protective measures including workspace and topsoiling requirements, will apply to these agricultural wetlands.

12.1 General Procedures

12.1.1 Clearing and Grading

1. Limit construction activity and ground disturbance in wetland areas to a construction ROW width of 75 feet or as shown on the construction drawings. With written approval from the FERC for site-specific conditions, construction ROW width within the boundaries of federally delineated wetlands may be expanded beyond 75 feet.
2. Wetland boundaries and buffers must be clearly marked in the field with signs and /or highly visible flagging until construction-related ground disturbing activities are complete.
3. Restrict extra work areas (such as staging areas and additional spoil storage areas) to those shown only on the construction drawings. All extra work areas must be located at least 50 feet away from wetland boundaries, except where the adjacent upland consists of cultivated or rotated cropland or other disturbed land. If site-specific conditions do not permit a 50-foot setback, PennEast can receive written approval from the FERC to locate these extra work areas closer than 50 feet from the wetland.
4. Aboveground facilities are typically not located in wetland areas. If it is necessary for aboveground facilities to impact wetlands, PennEast will obtain the necessary permits from the appropriate regulatory agencies and provide the appropriate mitigations measures necessary to offset the wetland impacts.
5. If standing water or saturated soils are present, or if construction equipment causes ruts or mixing of the topsoil and subsoil in wetlands, use low-ground-weight construction equipment or operate normal equipment on timber, prefabricated equipment mats or terra mats on the working side of the ROW during clearing operations. Do not use more than two layers of timber mats to stabilize the ROW.
6. Cut vegetation just above ground level and grind stumps to ground level, leaving existing root systems in place. Immediately remove all cut trees and branches from the wetland and stockpile in an upland area on ROW for disposal.
7. Limit pulling of tree stumps and grading activities to directly over the trenchline. Do not grade or remove stumps or root systems from the rest of the ROW in wetlands unless the Chief Inspector and EI determine that safety-related construction constraints require removal of tree stumps from under the working side of the ROW.
8. Do not cut trees outside of the construction ROW to obtain timber for riprap or equipment mats.
9. Cleared materials (slash, logs, brush, wood chips) shall not be permanently placed within wetland areas.

12.1.2 Temporary Erosion and Sediment Control

1. Install BMPs immediately after initial ground disturbance at the following locations:
   a) Within the ROW at the edge of the boundary between wetland and upland;
   b) Across the entire ROW immediately upslope of the wetland boundary to contain spoil within the ROW and prevent sediment flow into the wetland;
   c) Along the edge of the ROW, where the ROW slopes toward the wetland, to protect adjacent, off ROW wetland; and
   d) Along the edge of the ROW as necessary to contain spoil and sediment within the ROW through wetlands.

2. Maintain all BMPs throughout construction and reinstall as necessary (such as after backfilling of the trench) until replaced by permanent erosion controls or restoration of adjacent upland areas is complete.

12.1.3 Crossing Procedure

1. Minimize the length of time that topsoil is segregated and the trench is open. Do not trench the wetland until the pipeline is assembled and ready for lowering in.
2. Do not use rock, soil imported from outside the wetland, tree stumps, or brush riprap to stabilize the ROW.
3. Perform topsoil segregation in accordance with Section 9.5.3.1 and trench dewatering in accordance with Section 9.5.6.
4. Assemble the pipeline in an upland area unless the wetland is dry enough to adequately support skids and pipe.
5. Install trench plugs at wetland boundaries and/or seal the trench bottom as necessary to maintain the original wetland hydrology at locations where the pipeline trench may drain a wetland.
6. Restore pre-construction wetland contours to maintain the original wetland hydrology.
7. Install a permanent waterbars and a trench plug at the base of slopes near the boundary between the wetland and adjacent upland areas. In addition, install BMPs as outlined in Section 9.5.2. Permanent waterbars shall not be installed in agricultural areas.
8. Restore segregated topsoil to its original position after backfilling is complete. When required, additional fill material imported from off the ROW must be approved by the EI. The original wetland contours and flow regimes will be restored to the extent practical.

12.1.4 Cleanup and Restoration

1. Revegetate the ROW with annual ryegrass at 40 lbs/acre PLS or with the recommended Wetland Seed Mix in Figure 39 on Drawing No 000-03-09-007, unless standing water is present.
2. **Do not use mulch, lime or fertilizer in wetland areas unless required in writing by the appropriate federal or state agency.**
3. Mulch the disturbed ROW only when required by the appropriate land management or state agency, as identified in the Clearance Package/Permit Book.
4. In the event that final cleanup is deferred more than 20 days after the trench is backfilled, all slopes adjacent to wetlands shall be mulched with 3 tons/acre of straw for a minimum of 100 feet on each side of the crossing. Liquid mulch binders will not be used within 100 feet of wetlands or waterbodies.
5. Remove all timber mats and prefabricated equipment mats upon completion of construction.
6. Develop specific procedures in coordination with the appropriate federal or state agencies, where necessary, to prevent the invasion or spread of invasive species and noxious weeds (such as purple loose strife and common reed).
7. Ensure that all disturbed areas permanently revegetate in accordance with Section 14.1.
8. Remove temporary BMPs located at the boundary between wetland and adjacent upland areas after upland revegetation and stabilization of adjacent upland areas are successful as specified in Section 14.1.

13.0 SPILL PREVENTION CONTROL

The Contractor shall adhere to PennEast's SPCC Plan at all times.

1. Do not store hazardous materials, chemicals, fuels, or lubricating oils within 100 feet of any wetland, waterbody or within any designated municipal watershed area where feasible. If the 100- foot setback cannot be met, this activity can be performed within the 100-foot setback, with EI approval, if done in accordance with the SPCC Plan.
2. Refuel all construction equipment at least 100 feet from any wetland or waterbody, where feasible. If the 100-foot setback cannot be met, this activity can be performed within the 100-foot setback, with EI approval, if done in accordance with the SPCC Plan.
3. Do not perform FBE or concrete coating activities within 100 feet of any wetland or waterbody, unless the location is an existing industrial site designated for such use. If the 100-foot setback cannot be met, these activities can be performed within the 100-foot setback, with EI approval, if done in accordance with the SPCC Plan. These activities can occur closer only if the Environmental Inspector determines that there is no reasonable alternative, and the project sponsor and its contractors have taken appropriate steps (including secondary containment structures) to prevent spills and provide for prompt cleanup in the event of a spill;
4. Pumps operating within 100 feet of a waterbody or wetland boundary utilize appropriate secondary containment systems to prevent spills; and
5. Bulk storage of hazardous materials, including chemicals, fuels, and lubricating oils have appropriate secondary containment systems to prevent spills.

14.0 POST CONSTRUCTION ACTIVITIES

14.1 Post-Construction Monitoring

All projects conducted under this E&SCP, with the exception of in-situ pipe replacements (i.e. DOT-mandated replacements, line lowerings, and anomaly repairs), shall meet the monitoring requirements set forth in this section. Company personnel shall perform the following:

1. Establish and implement a program to monitor the success of restoration upon completion of construction and restoration activities;
2. Conduct follow-up inspections of all disturbed areas, as necessary to determine the success of revegetation and address landowner concerns. At a minimum, conduct inspections after the first and second growing seasons;
3. Revegetation in nonagricultural areas shall be considered successful if the vegetative cover is sufficient to prevent the erosion of soils on the disturbed ROW and density and cover are similar to that in adjacent undisturbed area. Sufficient coverage in upland areas is defined when vegetation has a uniform 70 percent vegetative coverage. In agricultural areas, revegetation shall be considered successful when upon visual survey, crop growth and vigor are similar to adjacent undisturbed portions of the same field, unless the easement agreement specifies otherwise. Revegetation efforts (such as fertilizing or reseeding) will continue until revegetation is successful;
4. Restoration shall be considered successful if the ROW surface condition is similar to adjacent undisturbed lands, construction debris is removed (unless otherwise approved by the land owner or land managing agency), revegetation is successful, and proper drainage has been restored;

5. Monitor and correct problems with drainage and irrigation systems resulting from pipeline construction in active agricultural areas until restoration is successful;
6. Make efforts to control unauthorized off-road vehicle use, in cooperation with the landowner, throughout the life of the project. Maintain signs, gates, and permanent access roads as necessary;
7. Monitor and record the success of wetland revegetation annually until wetland revegetation is successful. Wetland revegetation will be considered successful if all of the following criteria are satisfied: the affected wetland satisfies the current federal definition for a wetland (i.e., soils, hydrology, and vegetation); Vegetation is at least 80 percent of either the cover documented for the wetland prior to construction, or at least 80 percent of the cover in adjacent wetland areas that were not disturbed by construction; if natural rather than active revegetation was used, the plant species composition is consistent with early successional wetland plant communities in the affected ecoregion; and invasive species and noxious weeds are absent, unless they are abundant in adjacent areas that were not disturbed by construction.
8. For any wetland where vegetation is not successful at the end of 3 years after construction, PennEast shall develop and implement (in consultation with a professional wetland ecologist) a plan to actively revegetate the wetland with native wetland herbaceous and woody plant species; and
9. Inspect all temporary remaining erosion and sedimentation controls during routine patrols to ensure proper functioning. Any deficiencies found will be reported and corrected as needed. Once the area has revegetated and stabilized, the erosion controls will be removed.

14.2 Post-Construction Maintenance

All activities conducted under this E&SCP, shall meet the maintenance requirements set forth in this section. The following requirements restrict the amount of routine vegetation mowing or clearing that can occur on new pipeline facilities. Where the newly established pipeline ROW is located on other existing ROWs not affiliated with PennEast, the easement holder or owner will continue to maintain their ROWs using procedures specified in their vegetative management programs.

14.2.1 Uplands

Routine maintenance of the ROW is required to allow continued access for routine pipeline patrols, maintaining access in the event of emergency repairs, and visibility during aerial patrols. In upland areas, maintenance of the ROW will involve clearing the entire ROW of woody vegetation.

1. Routine vegetation mowing or clearing over a 30-foot wide corridor centered on the pipeline of the permanent right-of-way in uplands shall be conducted no more frequently than once every 3 years. However, to facilitate periodic corrosion and leak surveys, a 10-foot wide corridor centered on the pipeline may be cleared at a frequency necessary to maintain the 10-foot wide corridor in a herbaceous state.
2. In no case shall routine vegetation mowing or clearing occur during the migratory bird nesting season between April 15 and August 1 of any year unless specifically approved in writing by the responsible land management agency or the U.S. Fish and Wildlife Service.

14.2.2 Waterbodies and Wetlands

1. Routine vegetation mowing or clearing practices on the construction ROW adjacent to waterbodies will consist of maintaining a riparian strip that measures 25 feet back from the mean high water mark. This riparian area will be allowed to permanently revegetate with native plant species across the entire ROW.
2. Routine vegetation mowing or clearing over the full width of the construction ROW in wetlands is prohibited.
3. To facilitate periodic corrosion and leak surveys at wetlands and waterbodies, a 10-foot wide corridor centered on the pipeline may be cleared at a frequency necessary to maintain the 10-foot corridor in an herbaceous state. Trees and shrubs that are located within 15 feet of the pipeline that have roots that could compromise the integrity of the pipeline coating may be cut and removed from the ROW. Do not conduct any routine vegetation mowing or clearing in riparian areas that are between HDD entry and exit points.
4. Herbicides or pesticides will not be sprayed anywhere along the maintained permanent ROW.
5. Time of year restrictions (April 15 – August 1 of any year) apply to routine mowing and clearing of riparian areas.

14.3 Reporting

PennEast shall maintain records that identify by milepost:

1. Method of application, application rate, and type of fertilizer, pH modifying agent, seed, and mulch used;
2. Acreage treated;
3. Dates of backfilling and seeding; and
4. Names of landowners requesting special seeding treatment and a description of the follow-up actions.
5. The location of any subsurface drainage repairs or improvements made during restoration; and
6. Any problem areas and how they were addressed.

For the authorized projects, PennEast will file quarterly activity reports documenting the results of follow-up inspections and any problem areas, including those identified by the landowner, and corrective actions taken for at least 2 years following construction.

A wetland revegetation monitoring report identifying the status of the wetland revegetation efforts will be filed at the end of 3 years following construction, and annually thereafter documenting progress in these wetlands until revegetation is successful.

Appendix E1

Geology and Soils Table

Table E1
Geology and Soils Associated with the Project

Facility	Begin Mile Post[1]	End Mile Post[1]	County	Municipality	Physiographic Province	Geological Formation and Topography	Geologic Formation Symbol
Pennsylvania							
PennEast Mainline Route Pipeline							
	0.0	1.3	Luzerne	Dallas Township	Appalachian Plateaus	In Dallas Township, the Project is underlain by the Devonian-aged Catskill Formation, a grayish-red sandstone, siltstone, shale, and mudstone; locally conglomeratic. The topography is flat to undulating hills.	Dck
	1.3	4.2	Luzerne	Kingston Township	Appalachian Plateaus and Ridge & Valley	In Kingston Township, the Project is underlain by the Devonian-aged Catskill Formation, a grayish-red sandstone, siltstone, shale, and mudstone; locally conglomeratic. the Mississippian-aged Pocono Formation, a light-gray to buff or light-olive-gray, medium-grained, cross-bedded sandstone and minor siltstone The topography is undulating hills with some steep valleys.	Dck
	4.2	6.0	Luzerne	West Wyoming Borough	Ridge & Valley	In West Wyoming Borough, the Project is underlain by the Devonian-aged Catskill Formation, a grayish-red sandstone, siltstone, shale, and mudstone; locally conglomeratic; the Mississippian-aged Pocono Formation, a light-gray to buff or light-olive-gray, medium-grained, cross-bedded sandstone and minor siltstone; Mauch Chunk Formation, a grayish-red shale, siltstone, sandstone, and some conglomerate; the Pennsylvanian-aged Llewellyn Formation, a gray, fine- to coarse-grained sandstone, siltstone, shale, conglomerate, and numerous anthracite coals in repetitive sequences; and Pottsville Formation, a gray sandstone and conglomerate; also contains thin beds of shale, claystone, limestone, and coal. The topography is a steep valley to flat.	Dck Mp Mmc Pl Pp
	6.0	7.1	Luzerne	Wyoming Borough	Ridge & Valley	In Wyoming Borough, the Project area is underlain by the Pennsylvanian-age Llewellyn Formation, a gray, fine- to coarse-grained sandstone, siltstone, shale, conglomerate, and numerous anthracite coals in repetitive sequences. The topography is relatively flat.	Pl

Facility	Begin Mile Post[1]	End Mile Post[1]	County	Municipality	Physiographic Province	Geological Formation and Topography	Geologic Formation Symbol
	7.1	11.0	Luzerne	Jenkins Township	Ridge & Valley	In Jenkins Township, the Project area is underlain by the Pennsylvanian-age Llewellyn Formation, a gray, fine- to coarse-grained sandstone, siltstone, shale, conglomerate, and numerous anthracite coals in repetitive sequences and the Pottsville Formation, a gray sandstone and conglomerate; also contains thin beds of shale, claystone, limestone, and coal The topography is relatively flat to undulating.	Pl Pp
	8.1	12.6	Luzerne	Plains Township	Ridge & Valley	In Plains Township, the Project area is underlain by the Pennsylvanian-age Llewellyn Formation, a gray, fine- to coarse-grained sandstone, siltstone, shale, conglomerate, and numerous anthracite coals in repetitive sequences; Pottsville Formation, a gray sandstone and conglomerate; also contains thin beds of shale, claystone, limestone, and coal; and the Mississippian-aged Mauch Chunk Formation, a grayish-red shale, siltstone, sandstone, and some conglomerate. The topography is relatively flat to undulating.	Pl Pp Mmc
	9.1	10.2	Luzerne	Laflin Borough	Ridge & Valley	In Laflin Borough, the Project area is underlain by the Pennsylvanian age Llewellyn Formation, a gray, find- to coarse-grained sandstone, siltstone, shale, conglomerate, and numerous anthracite coals in repetitive sequences; Pottsville Formation, a gray sandstone and conglomerate; also contains thin beds of shale, claystone, limestone, and coal. The topography is relatively flat to undulating.	Pl Pp
	12.6	23.0	Luzerne	Bear Creek Township	Ridge & Valley and Appalachian Plateaus	In Bear Creek Township, the Project area is underlain by the Mississippian-aged Mauch Chunk Formation, a grayish-red shale, siltstone, sandstone, and some conglomerate; Pocono Formation, a light-gray to buff or light-olive-gray, medium-grained, cross-bedded sandstone and minor siltstone; Spechty Kopf Formation, a light- to olive-gray, fine- to medium- grained, cross-bedded sandstone with minor pebbly mudstone, and laminite arranged in crude fining-upward cycles in some places; and the Devonian-aged Duncannon member of the Catskill Formation, a grayish-red sandstone, siltstone, and mudstone in fining-upward cycles; conglomerate occurs at base of some cycles. The topography is undulating hills. Elevation ranges from 1200’ to 2010’ above sea level.	Mmc Mp MDsk Dcd

Facility	Begin Mile Post[1]	End Mile Post[1]	County	Municipality	Physiographic Province	Geological Formation and Topography	Geologic Formation Symbol
	23.0	33.1	Carbon	Kidder Township	Appalachian Plateaus	In Kidder Township, the Project area is underlain by the Mississippian-aged Spechty Kopf Formation, a light- to olive-gray, fine- to medium- grained, cross-bedded sandstone with minor pebbly mudstone, and laminite arranged in crude fining-upward cycles in some places; and the Devonian-aged Duncannon member of the Catskill Formation, a grayish-red sandstone, siltstone, and mudstone in fining-upward cycles; conglomerate occurs at base of some cycles. The topography is gently undulating.	MDsk Dcd
	33.1	40.6	Carbon	Penn Forest Township	Appalachian Plateaus and Ridge & Valley	In Penn Forest Township, the Project area is underlain by the Devonian-aged Duncannon member of the Catskill Formation, a grayish-red sandstone, siltstone, and mudstone in fining-upward cycles, with conglomerate occurring at the base of some cycles; the Mississippian-aged Spechty Kopf Formation, a light- to olive-gray, fine- to medium- grained, cross-bedded sandstone with minor pebbly mudstone, and laminite, arranged in crude fining-upward cycles in some places; and by the following members of the Devonian-aged Catskill Formation: Poplar Gap member, gray and light-olive-gray sandstone, conglomerate, and siltstone containing intermittent red beds; Packerton member, a greenish-gray to gray sandstone and some siltstone; some laterally persistent conglomerate beds in lower part; Long Run member, a gray and grayish-red sandstone and grayish-red siltstone and mudstone in fining-upward cycles. The topography is gently undulating to undulating.	Dcd MDsk Dcpg Dcp Dclr

Facility	Begin Mile Post[1]	End Mile Post[1]	County	Municipality	Physiographic Province	Geological Formation and Topography	Geologic Formation Symbol
	40.6	47.1	Carbon	Towamensing Township	Ridge and Valley	In Towamensing Township, the Project area is underlain by the following members of the Devonian-aged Catskill Formation: Long Run member, a gray and grayish-red sandstone and grayish-red siltstone and mudstone in fining-upward cycles; Beaverdam Run Member, an alternating olive-gray siltstone and sandstone; with marine fossils; Walcksville member, a greenish-gray sandstone and red siltstone and mudstone in fining-upward cycles; and the Towamensing member, consisting of sandstone, siltstone, and shale. Other Devonian-aged Formations underlying the Project area are the Trimmers Rock Formation, olive-gray siltstone and shale, characterized by graded bedding with marine fossils and some very fine grained sandstone; Mahantango Formation, a gray, brown, and olive shale and siltstone, with marine fossils; and the Marcellus Formation, a black shale with sparse marine fauna and siderite concretions. The topography is gently undulating.	Dclr Dcbr Dcw Dct Dtr Dmh Dm
	47.1	51.1	Carbon	Lower Towamensing Township	Ridge & Valley	In Lower Towamensing Township, the Project area is underlain by the following members of the Devonian-aged Catskill Formation: Walcksville member, a greenish-gray sandstone and red siltstone and mudstone in fining-upward cycles; and the Towamensing member, consisting of sandstone, siltstone, and shale. Other Devonian-aged Formations underlying the Project area are the Trimmers Rock Formation, an olive-gray siltstone and shale, characterized by graded bedding, marine fossils, and some very fine grained sandstone; Mahantango Formation, a gray, brown, and olive shale and siltstone, with marine fossils; the Marcellus Formation, a black shale with sparse marine fauna and siderite concretions; the Buttermilk Falls Limestone, a gray fossiliferous limestone and black chert; and the Ridgeley Formation, a white siliceous sandstone. Silurian-aged Formations underlying the Project area are the Decker Formation, a gray calcareous sandstone having lenses of calcareous conglomerate, siltstone, and shale, and lenses of limestone and dolomite; the Bloomsburg Formation, a grayish-red siltstone, shale, and sandstone arranged in fining-upward cycles; and the Shawangunk Formation, a light to dark-gray, fine to very coarse grained sandstone and conglomerate, containing a few shale interbeds. The topography is gently undulating to undulating.	Dcw Dct Dtr Dmh Dm Dbe Drc Sdp Sb Ss

Facility	Begin Mile Post[1]	End Mile Post[1]	County	Municipality	Physiographic Province	Geological Formation and Topography	Geologic Formation Symbol
	51.1	53.5	North-ampton	Lehigh Township	Ridge & Valley	In Lehigh Township, the Project area is underlain by the Silurian-aged Shawangunk Formation, a light to dark-gray, fine to very coarse grained sandstone and conglomerate, containing a few shale interbeds, and the Ordovician-aged Martinsburg Formation, a gray to dark gray, and infrequently tan and purple shale and slate with graywacke and shale, which consists of abundant impure sandstone (graywacke) interbeds. The topography is gently undulating.	Ss Om
	53.5	60.3	North-ampton	Moore Township	Ridge & Valley	In Moore Township, the Project area is underlain by the Ordovician-aged Martinsburg Formation, a gray to dark gray, and infrequently tan and purple shale and slate with graywacke and shale, which consists of abundant impure sandstone (graywacke) interbeds. The topography is gently undulating.	Om Omgs
	60.3	61.2	North-ampton	East Allen Township	Ridge & Valley	In East Allen Township, the Project area is underlain by the Ordovician-aged Martinsburg Formation, a gray to dark gray, and infrequently tan and purple shale and slate. The topography is gently undulating.	Om
	61.2	63.9	North-ampton	Upper Nazareth Township	Ridge & Valley	In Upper Nazareth Township, the Project area is underlain by Ordovician-aged Jacksonburg Formation, a dark-gray shaly limestone (cement rock) having slaty cleavage; basal medium- to thick-bedded limestone (cement limestone); the Martinsburg Formation, a gray to dark gray, and infrequently tan and purple shale and slate; and the Epler Formation, a very finely crystalline, light-gray limestone interbedded with gray dolomite; coarsely crystalline limestone lenses present. The topography is flat to gently undulating.	Ojk Om Oe
	63.9	67.1	North-ampton	Lower Nazareth Township	Ridge & Valley	In Lower Nazareth Township, the Project area is underlain by Ordovician-aged Epler Formation, a very finely crystalline, light-gray limestone interbedded with gray dolomite; coarsely crystalline limestone lenses present; the Rickenbach Formation, a gray, very finely to coarsely crystalline, laminated dolomite; dark-gray chert in irregular beds, stringers, and nodules; bands of quartz sand grains in lower half; and the Cambrian-aged Allentown Formation, a dark-gray, thick-bedded dolomite and impure limestone; dark-gray chert stringers and nodules; laminated, oolitic and stromatolitic, some orange-brown-weathering calcareous siltstone at base. The topography is flat to gently undulating.	Oe Ori Cal

Facility	Begin Mile Post[1]	End Mile Post[1]	County	Municipality	Physiographic Province	Geological Formation and Topography	Geologic Formation Symbol
	67.1	70.9	North-ampton	Bethlehem Township	Ridge & Valley	In Bethlehem Township, the Project area is underlain by Cambrian-aged Allentown Formation, a dark-gray, thick-bedded dolomite and impure limestone; dark-gray chert stringers and nodules; laminated, oolitic and stromatolitic, some orange-brown-weathering calcareous siltstone at base and the Leithsville Formation, a gray, crystalline dolomite, light-olive-gray in places, massive bedded; oolitic; pink to gray, mottled chert and dark-gray chert, thin shale and dolomitic shale interbeds, scattered sand grains; upper part is very shaly. The topography is flat to gently undulating.	Cal Clv
	70.9	71.1	North-ampton	City of Easton	Ridge & Valley	In the City of Easton, the Project area is underlain by Cambrian-aged Leithsville Formation, a gray, crystalline dolomite, light-olive-gray in places, massive bedded; oolitic; pink to gray, mottled chert and dark-gray chert, thin shale and dolomitic shale interbeds, scattered sand grains; upper part is very shaly. The topography is gently undulating.	Clv
	71.1	72.4	North-ampton	Lower Saucon Township	Ridge & Valley and New England	In the Ridge and Valley Physiographic portion of Lower Saucon Township, the Project area is underlain by the Cambrian-aged Leithsville Formation, a gray, crystalline dolomite, light-olive-gray in places, massive bedded; oolitic; pink to gray, mottled chert and dark-gray chert, thin shale and dolomitic shale interbeds, scattered sand grains; upper part is very shaly; and Hardyston Formation, a light-gray, fine- to medium-grained quartzite, and feldspathic sandstone; color ranges from nearly white to dark gray; massive bedded; quartz-pebble conglomerate occurs at base. In the New England Physiographic portion of Lower Saucon Township, the dark, medium-grained Precambrian hornblende gneiss; and light, medium-grained felsic to mafic gneiss underlie the Project area. The topography is upslope. The elevation ranges from 200' to 600' above sea level.	Clv Cha hg gn

Facility	Begin Mile Post[1]	End Mile Post[1]	County	Municipality	Physiographic Province	Geological Formation and Topography	Geologic Formation Symbol
	72.4	75.9	North-ampton	Williams Township	Ridge & Valley and New England	In the Ridge and Valley Physiographic portion of Williams Township, the Project area is underlain by the Cambrian-aged Leithsville Formation, a gray, crystalline dolomite, light-olive-gray in places, massive bedded; oolitic; pink to gray, mottled chert and dark-gray chert, thin shale and dolomitic shale interbeds, scattered sand grains; upper part is very shaly; Allentown Formation, a dark-gray, thick-bedded dolomite and impure limestone; dark-gray chert stringers and nodules; laminated, oolitic and stromatolitic, some orange-brown-weathering calcareous siltstone at base; and Hardyston Formation, a light-gray, fine- to medium-grained quartzite, and feldspathic sandstone; color ranges from nearly white to dark gray; massive bedded; quartz-pebble conglomerate occurs at base. In the New England Physiographic portion of Williams Township, the dark, medium-grained Precambrian hornblende gneiss; and light, medium-grained felsic to mafic gneiss underlie the Project area. The topography is upslope.	Clv Cal Cha hg gn
	75.9	77.7	Bucks	Durham Township	Ridge & Valley, and New England	In the Ridge and Valley Physiographic portion of Durham Township, the Project area is underlain by the Cambrian-aged Hardyston Formation, a light-gray, fine- to medium-grained quartzite, and feldspathic sandstone; color ranges from nearly white to dark gray; massive bedded; quartz-pebble conglomerate occurs at base; Leithsville Formation, a gray, crystalline dolomite, light-olive-gray in places, massive bedded; oolitic; pink to gray, mottled chert and dark-gray chert, thin shale and dolomitic shale interbeds, scattered sand grains; upper part is very shaly; and Allentown Formation, a dark-gray, thick-bedded dolomite and impure limestone; dark-gray chert stringers and nodules; laminated, oolitic and stromatolitic, some orange-brown-weathering calcareous siltstone at base. In the New England Physiographic portion of Durham Township, the Project area is underlain by the Trenton Gravel, a gray or pale-reddish-brown, very gravelly sand interstratified with crossbedded sand and clay-silt beds; includes areas of Holocene alluvium and swamp deposits and dark, medium-grained Precambrian hornblende gneiss; and light, medium-grained felsic to mafic gneiss also underlie the Project area.The topography is relatively flat.	Cha Clv Cal Qt hg gn

Facility	Begin Mile Post[1]	End Mile Post[1]	County	Municipality	Physiographic Province	Geological Formation and Topography	Geologic Formation Symbol
	76.7	76.9	Bucks	Riegelsville Borough	Ridge and Valley	In Riegelsville Borough, the Project area is underlain by the Cambrian-aged Allentown Formation, a dark-gray, thick-bedded dolomite and impure limestone; dark-gray chert stringers and nodules; laminated, oolitic and stromatolitic, some orange-brown-weathering calcareous siltstone at base. The topography is flat	Cal

Facility	Begin Mile Post[1]	End Mile Post[1]	County	Municipality	Physiographic Province	Geological Formation and Topography	Geologic Formation Symbol
Hellertown Lateral							
	0.0	2.1	North-ampton	Lower Saucon Township	New England and Ridge and Valley	In the New England Physiographic portion of the Hellertown Lateral Project area, the bedrock is composed of the dark, medium-grained Precambrian hornblende gneiss; and the light, medium-grained felsic to mafic gneiss. This rock comprises most of the higher elevations due to its resistance to weathering. In the Ridge and Valley Physiographic portion of the Hellertown Lateral Project area, the bedrock is composed of the Cambrian-aged Leithsville Formation, a gray, fine- to medium-grained, thin- to medium-bedded dolomite; and Hardyston Formation, a light-gray, fine- to medium-grained quartzite, and feldspathic sandstone; quartz-pebble conglomerate occurring at base. Elevation ranges from approximately 350' to 700' above sea level.	hg gn Clv Cha

Facility	Begin Mile Post[1]	End Mile Post[1]	County	Municipality	Physiographic Province	Geological Formation and Topography	Geologic Formation Symbol
New Jersey							
PennEast Mainline Route Pipeline							
	77.7	85.6	Hunter-don	Holland Township	New England, Ridge and Valley and Piedmont	In Holland Township, the Project area is underlain by the Cambrian-aged Hardyston Formation, a light-gray, fine- to medium-grained quartzite, and feldspathic sandstone; quartz-pebble conglomerate occurring at base. Middle Proterozoic-aged Quartz-Oligoclase Gneiss Losee Metamorphic Suite, a white-weathering, light-greenish-gray, medium- to coarse-grained, moderately layered to indistinctly foliated gneiss and the Hornblende Granite - Byram Intrusive Suite, a pinkish-gray- to medium-buff-weathering, pinkish-white or light-pinkish-gray, medium- to coarse-grained, gneissoid to indistinctly foliated granite and sparse granite gneiss composed principally of microcline microperthite, quartz, oligoclase, and hornblende. The Project area is also underlain by the Cambrian-aged Leithsville Formation gray, a fine- to medium-grained, thin- to medium-bedded dolomite; the Jurassic–Triassic-aged Passaic Formation, a reddish-brown to brownish-purple and grayish-red siltstone and shale; the Passaic Formation quartzite-clast conglomerate facies, a brownish-red pebble conglomerate, medium- to coarse-grained, feldspathic sandstone and micaceous siltstone; the Passaic Formation conglomerate and sandstone facies, a brownish-red pebble conglomerate, medium- to coarse-grained, feldspathic sandstone and micaceous siltstone; and the Triassic-aged Passaic Formation gray bed, an Upper Triassic gray lake deposits that consists of gray to black silty mudstone, gray and greenish- to purplish-gray argillaceous siltstone, black shale, and medium- to dark-gray, argillaceous, fine-grained sandstone, this unit is abundant in the lower half of the Passaic Formation. The topography is gently rolling hills.	Ch Ylo Ybh Cl JTrp JTrpcq JTrpsc Trpg

Facility	Begin Mile Post[1]	End Mile Post[1]	County	Municipality	Physiographic Province	Geological Formation and Topography	Geologic Formation Symbol
	85.6	87.7	Hunter-don	Alexandria Township	Piedmont	In Alexandria Township, the Project area is underlain by the Jurassic – Triassic-aged Passaic Formation, a reddish-brown to brownish-purple and grayish-red siltstone and shale; and the Triassic-aged Passaic Formation gray bed, an Upper Triassic gray lake deposits that consists of gray to black silty mudstone, gray and greenish- to purplish-gray argillaceous siltstone, black shale, and medium- to dark-gray, argillaceous, fine-grained sandstone, this unit is abundant in the lower half of the Passaic Formation. The topography is gently undulating.	JTrp Trpg
	87.7	94.4	Hunter-don	Kingwood Township	Piedmont	In Kingwood Township, the Project area is underlain by the Jurassic – Triassic-aged Passaic Formation, a reddish-brown to brownish-purple and grayish-red siltstone and shale; the Triassic-aged Passaic Formation gray bed, an Upper Triassic gray lake deposits that consists of gray to black silty mudstone, gray and greenish- to purplish-gray argillaceous siltstone, black shale, and medium- to dark-gray, argillaceous, fine-grained sandstone, this unit is abundant in the lower half of the Passaic Formation; the Triassic-aged Lockatong Formation, cyclic lacustrine sequences of silty, dolomitic or argillite; laminated mudstone; and the Lockatong Formation red bed, cyclic lacustrine sequences of silty, dolomitic or analcime-bearing argillite; laminated mudstone; silty to calcareous, argillaceous very fine grained sandstone and pyritic siltstone; and minor silty limestone, mostly light- to dark-gray, greenish gray, and black. The topography is gently undulating to flat.	JTrp Trpg Trl Trlr
	94.4	100.3	Hunter-don	Delaware Township	Piedmont	In Delaware Township, the Project area is underlain by the Jurassic-aged Diabase, which are sheet-like intrusions of medium- to fine-grained diabase and diabase dikes whose main components are labradorite and pyroxene; the Jurassic – Triassic-aged Passaic Formation, a reddish-brown to brownish-purple and grayish-red siltstone and shale; the Triassic-aged Lockatong Formation, which consists of cyclic lacustrine sequences of silty, dolomitic or argillite; laminated mudstone; and the Triassic-aged Stockton Formation major rock type medium- to coarse-grained, light-gray, light-grayish-brown, or yellowish- to pinkish-gray arkosic sandstone and medium- to fine-grained, violet-gray to reddish-brown arkosic sandstone with minor argillaceous siltstone. The topography is flat to gently undulating.	Jd JTrp Trl Trs

Facility	Begin Mile Post[1]	End Mile Post[1]	County	Municipality	Physiographic Province	Geological Formation and Topography	Geologic Formation Symbol
	100.3	104.4	Hunter-don	West Amwell Township	Piedmont	In this portion of West Amwell Township, the Project area is underlain by theJurassic Diabase, consisting predominantly of sheet-like intrusions of medium- to fine-grained diabase and diabase dikes, main components are labradorite and pyroxene; the Jurassic – Triassic-aged Passaic Formation, a reddish-brown to brownish-purple and grayish-red siltstone and shale;; the Triassic-aged Lockatong Formation - predominantly cyclic lacustrine sequences of silty, dolomitic or argillite; laminated mudstone; and the Triassic-aged Passaic Formation gray bed, an Upper Triassic gray lake deposits that consists of gray to black silty mudstone, gray and greenish- to purplish-gray argillaceous siltstone, black shale, and medium- to dark-gray, argillaceous, fine-grained sandstone, this unit is abundant in the lower half of the Passaic Formation. The topography is gently undulating to flat.	Jd JTrp Trl Trpg
	104.4	114.0	Mercer	Hopewell Township	Piedmont	In Hopewell Township, the Project area is underlain by the Jurassic-aged Diabase, which are sheet-like intrusions of medium- to fine-grained diabase and diabase dikes, whose main components are labradorite and pyroxene; the Jurassic – Triassic-aged Passaic Formation, a reddish-brown to brownish-purple and grayish-red siltstone and shale; and the Triassic-aged Passaic Formation gray bed, an Upper Triassic gray lake deposits that consists of gray to black silty mudstone, gray and greenish- to purplish-gray argillaceous siltstone, black shale, and medium- to dark-gray, argillaceous, fine-grained sandstone, this unit is abundant in the lower half of the Passaic Formation. The topography is gently undulating to flat.	Jd JTrp Trpg

Gilbert 12-inch Lateral

Facility	Begin Mile Post[1]	End Mile Post[1]	County	Municipality	Physiographic Province	Geological Formation and Topography	Geologic Formation Symbol
	0.0	0.6	Hunter-don	Holland Township	Piedmont	In West Amwell Township, the Project area is underlain by the Jurassic-Triassic-aged Passaic Formation quartzite-clast conglomerate facies, a brownish-red pebble conglomerate, medium- to coarse-grained, feldspathic sandstone and micaceous siltstone; and the Passaic Formation conglomerate and sandstone facies, a brownish-red pebble conglomerate, medium- to coarse-grained, feldspathic sandstone and micaceous siltstone. The topography is gently rolling hills.	JTrpcq JTrpsc

Facility	Begin Mile Post[1]	End Mile Post[1]	County	Municipality	Physiographic Province	Geological Formation and Topography	Geologic Formation Symbol
Lambertville 36-inch Lateral							
	0.0	1.4	Hunter-don	West Amwell Township	Piedmont	In West Amwell Township, the Project area is underlain by the Jurassic – Triassic-aged Passaic Formation, a reddish-brown to brownish-purple and grayish-red siltstone and shale; and the Triassic-aged Passaic Formation gray bed, an Upper Triassic gray lake deposits that consists of gray to black silty mudstone, gray and greenish- to purplish-gray argillaceous siltstone, black shale, and medium- to dark-gray, argillaceous, fine-grained sandstone, this unit is abundant in the lower half of the Passaic Formation. The topography is flat to gently undulating.	JTrp Trpg

[1]Overlapping MPs are due to crossing in and out of municipality borders.

Appendix E2

Erosion & Sediment Pollution Control Plans

(Not Included)

Appendix E3

Erosion & Sediment Pollution Control Typicals

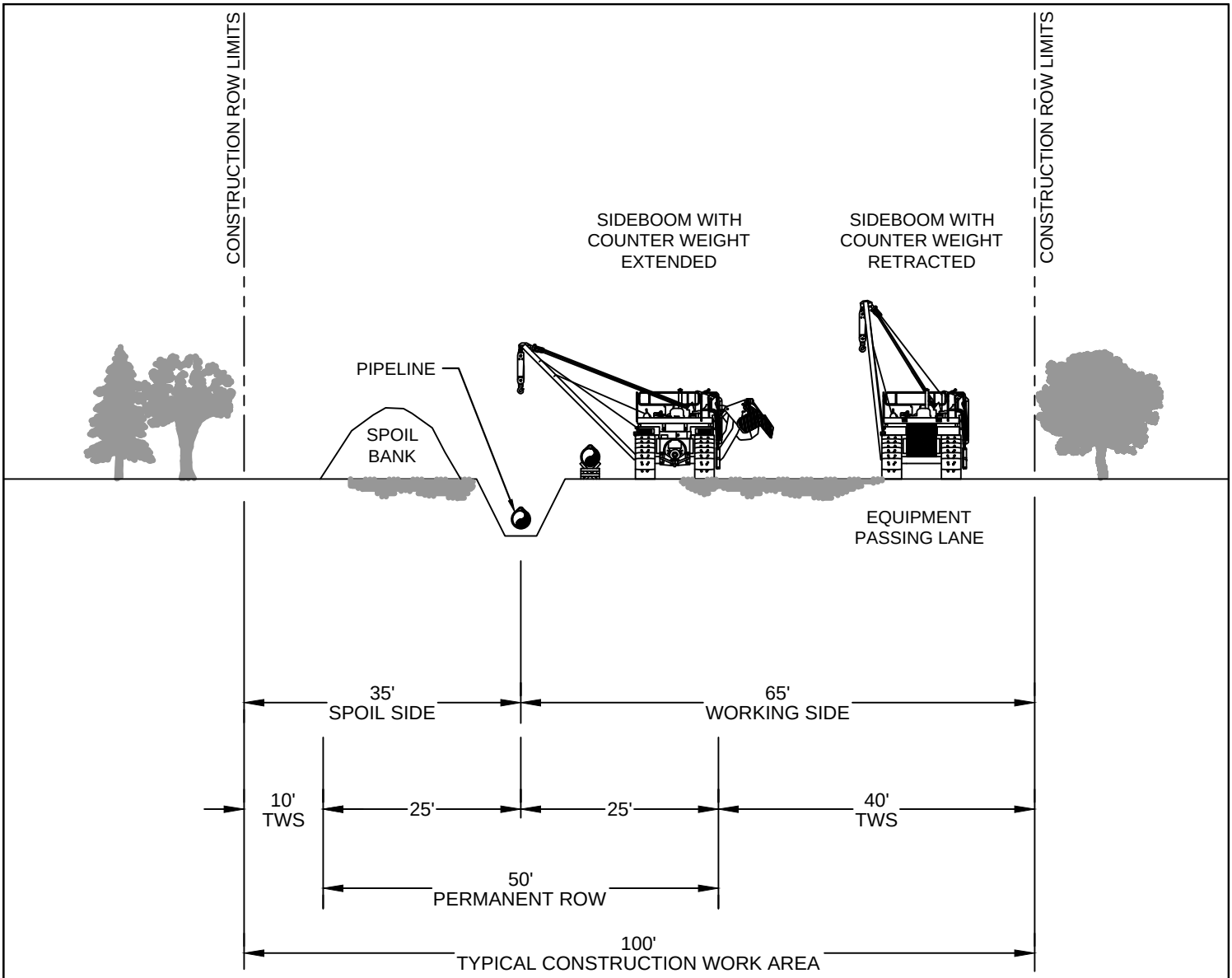

NOTES:

1. INSTALL TEMPORARY SLOPE BREAKERS UP SLOPE AS DIRECTED BY THE ENVIRONMENTAL INSPECTOR OR OTHER QUALIFIED PROFESSIONAL.
2. IN FORESTED AREAS, RESTRICT ROOT GRUBBING TO ONLY THAT AREA OVER THE DITCHLINE.
3. PIPE SECTION MAY BE FABRICATED WITHIN FORESTED AREAS ADJACENT TO ALIGNMENT, OR IN A STAGING AREA OUTSIDE THE FOREST AND WALKED IN.
4. RESTORE GRADE TO NEAR PRE-CONSTRUCTION TOPOGRAPHY, REPLACE TOPSOIL IF APPLICABLE AND INSTALL PERMANENT EROSION CONTROL.

Know what's below. Call before you dig.

REV	REV	REVISION DESCRIPTION	BY	CKD	APP
D	06/25/15	FERC FINAL	DW	AD	MW
C	04/13/15	FERC DRAFT FILING	MLS	MWC	JMH
B	12/16/14	PRELIMINARY ISSUE	RJC	JAM	JMH
A	11/04/14	ISSUED FOR DRAFT RESOURCE REPORT 1	JBB	JMA	JMH

PennEast PIPELINE

PREPARED BY: HMM

Hatch Mott MacDonald

PENNEAST PIPELINE PROJECT

TYPICAL UPLAND WORKSPACE

FIGURE NUMBER: FIGURE 1A

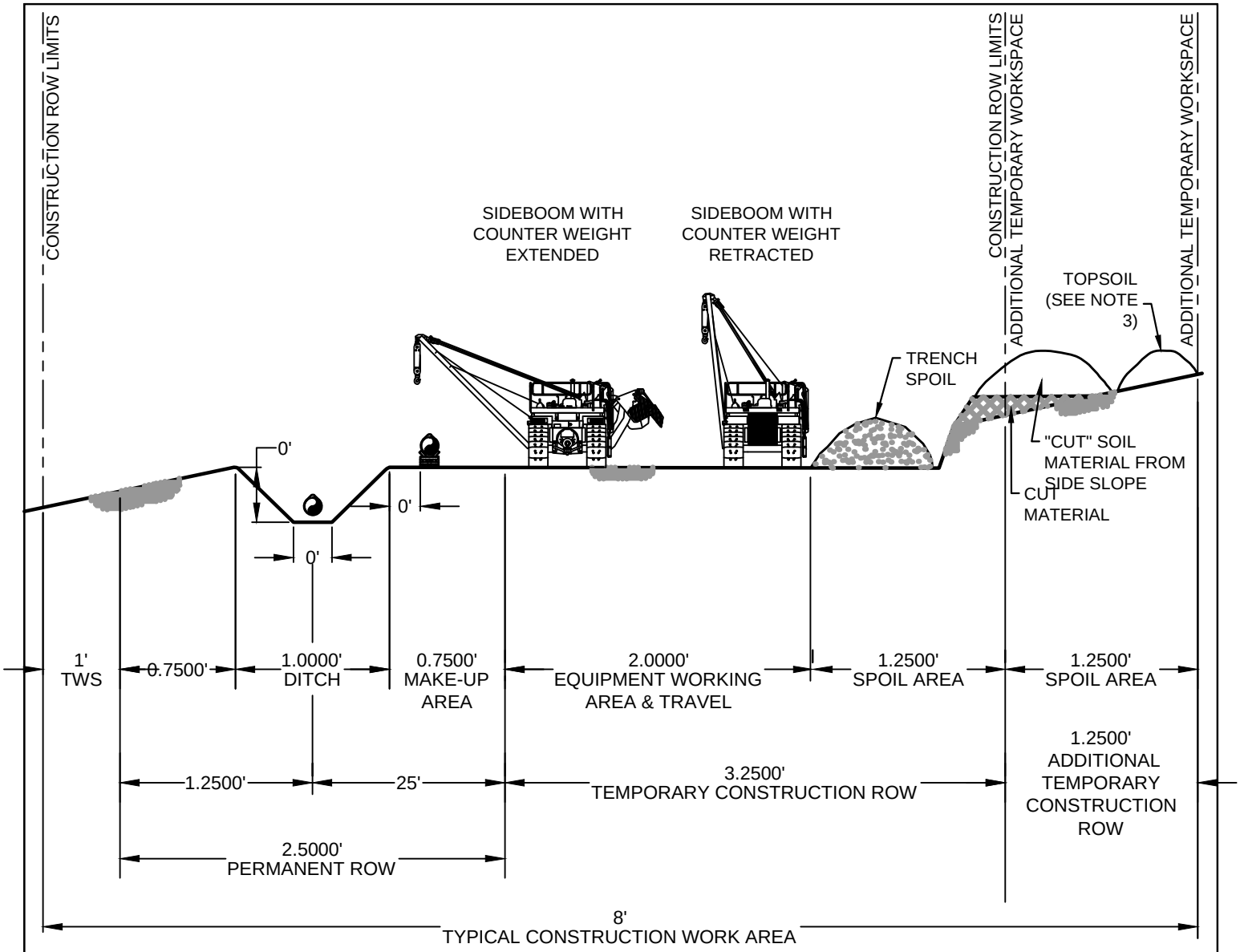

* DIMENSIONS ARE TYPICAL, SEE ALIGNMENT SHEETS FOR ACTUAL RIGHT-OF-WAY CONFIGURATIONS AND CLEARING LIMITS

NOTES:

1. CONSTRUCTION RIGHT-OF-WAY WILL TYPICALLY BE 100 FEET WIDE CONSISTING OF 50 FEET OF PERMANENT EASEMENT, 50 FEET TEMPORARY WORKSPACE AND ADDITIONAL WORKSPACE THAT WILL BE NECESSARY AT ROAD, RAIL AND RIVER CROSSINGS AND OTHER SPECIAL CIRCUMSTANCES, AS REQUIRED. CERTAIN SITUATIONS MAY REQUIRE A NARROWER WIDTH.
2. LEAVE GAPS IN SPOIL PILES AT OBVIOUS DRAINAGES. DO NOT PUSH UPLAND SOILS INTO CANALS OR WETLANDS.
3. DITCH LINE TOPSOIL WHERE REQUIRED BY LAND OWNER.
4. CLEAR AND STAKE ADDITIONAL RIGHT-OF-WAY TO ALLOW FOR EXTRA SPOIL.
5. ENSURE SIDE BOOM TRACTORS ARE EQUIPPED WITH BOOM EXTENDERS AND COUNTER-WEIGHTS IF REQUIRED.
6. USE BACKHOE TO ASSIST BULLDOZERS WITH REPLACING CUTS.
7. EMPLOY EROSION CONTROL MEASURES SUCH AS BREAKERS, CROSS DITCHES, BERMS AND REVEGETATION.

Know what's below. Call before you dig.

REV	REV	REVISION DESCRIPTION	BY	CKD	APP
D	06/25/15	FERC FINAL	DW	AD	MW
C	04/13/15	FERC DRAFT FILING	MLS	MWC	JMH
B	12/16/14	PRELIMINARY ISSUE	RJC	JAM	JMH
A	11/04/14	ISSUED FOR DRAFT RESOURCE REPORT 1	JBB	JMA	JMH

PennEast PIPELINE

PREPARED BY: HMM

Hatch Mott MacDonald

PENNEAST PIPELINE PROJECT

TYPICAL UPWARD SIDE SLOPE WORKSPACE CONSTRUCTION AREA

FIGURE NUMBER: FIGURE 1B

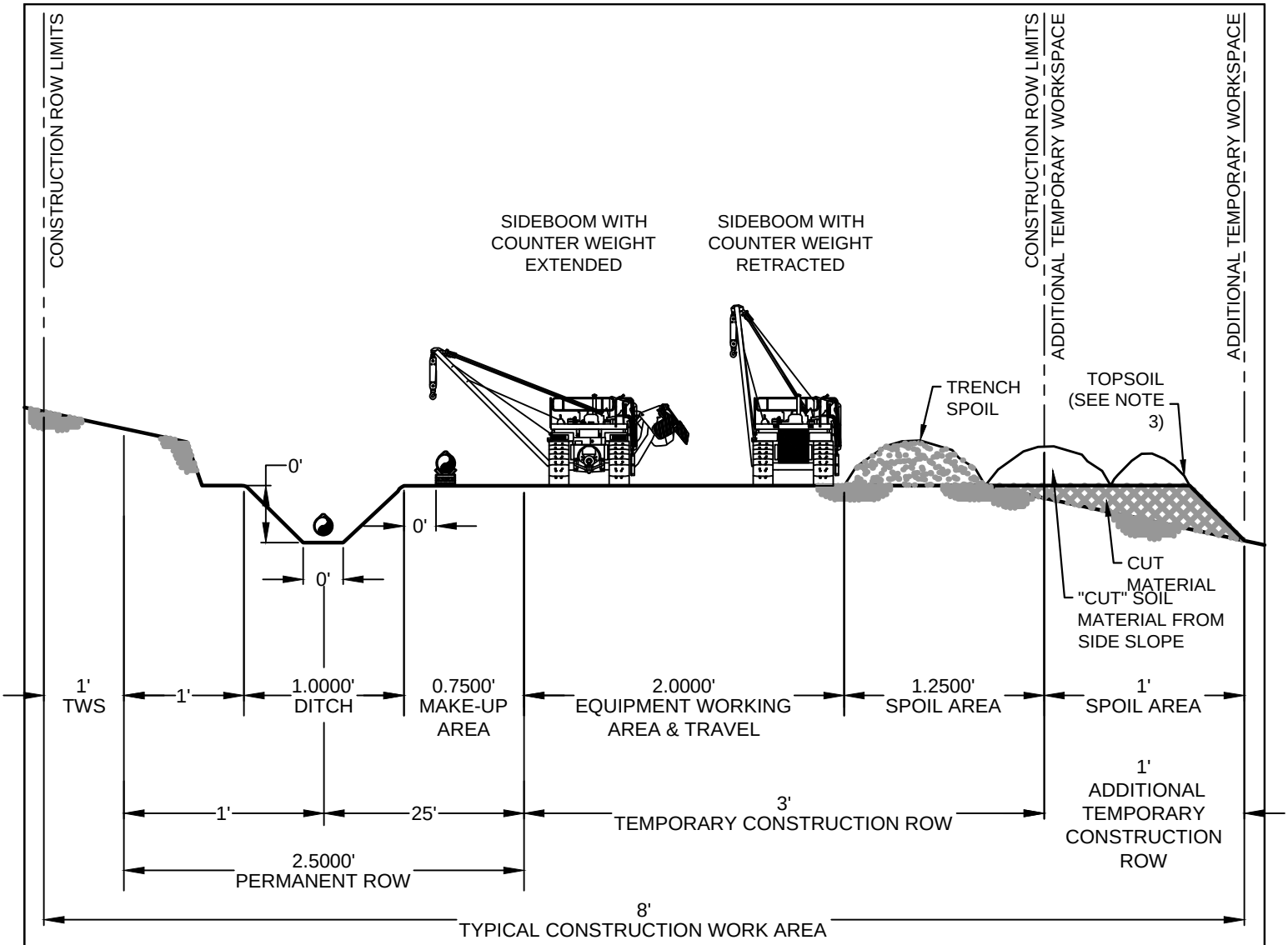

* DIMENSIONS ARE TYPICAL, SEE ALIGNMENT SHEETS FOR ACTUAL RIGHT-OF-WAY CONFIGURATIONS AND CLEARING LIMITS

NOTES:

1. CONSTRUCTION RIGHT-OF-WAY WILL TYPICALLY BE 100 FEET WIDE CONSISTING OF 50 FEET OF PERMANENT EASEMENT, 50 FEET TEMPORARY WORKSPACE AND ADDITIONAL WORKSPACE THAT WILL BE NECESSARY AT ROAD, RAIL AND RIVER CROSSINGS AND OTHER SPECIAL CIRCUMSTANCES, AS REQUIRED. CERTAIN SITUATIONS MAY REQUIRE A NARROWER WIDTH.
2. LEAVE GAPS IN SPOIL PILES AT OBVIOUS DRAINAGES. DO NOT PUSH UPLAND SOILS INTO CANALS OR WETLANDS.
3. DITCH LINE TOPSOIL WHERE REQUIRED BY LAND OWNER.
4. CLEAR AND STAKE ADDITIONAL RIGHT-OF-WAY TO ALLOW FOR EXTRA SPOIL.
5. ENSURE SIDE BOOM TRACTORS ARE EQUIPPED WITH BOOM EXTENDERS AND COUNTER-WEIGHTS IF REQUIRED.
6. USE BACKHOE TO ASSIST BULLDOZERS WITH REPLACING CUTS.
7. EMPLOY EROSION CONTROL MEASURES SUCH AS BREAKERS, CROSS DITCHES, BERMS AND REVEGETATION.

Know what's below. Call before you dig.

REV	REV	REVISION DESCRIPTION	BY	CKD	APP
D	06/25/15	FERC FINAL	DW	AD	MW
C	04/13/15	FERC DRAFT FILING	MLS	MWC	JMH
B	12/16/14	PRELIMINARY ISSUE	RJC	JAM	JMH
A	11/04/14	ISSUED FOR DRAFT RESOURCE REPORT 1	JBB	JMA	JMH

PennEast PIPELINE

PREPARED BY: HMM

Hatch Mott MacDonald

PENNEAST PIPELINE PROJECT

TYPICAL DOWNWARD SIDE SLOPE WORKSPACE CONSTRUCTION AREA

FIGURE NUMBER: FIGURE 1C

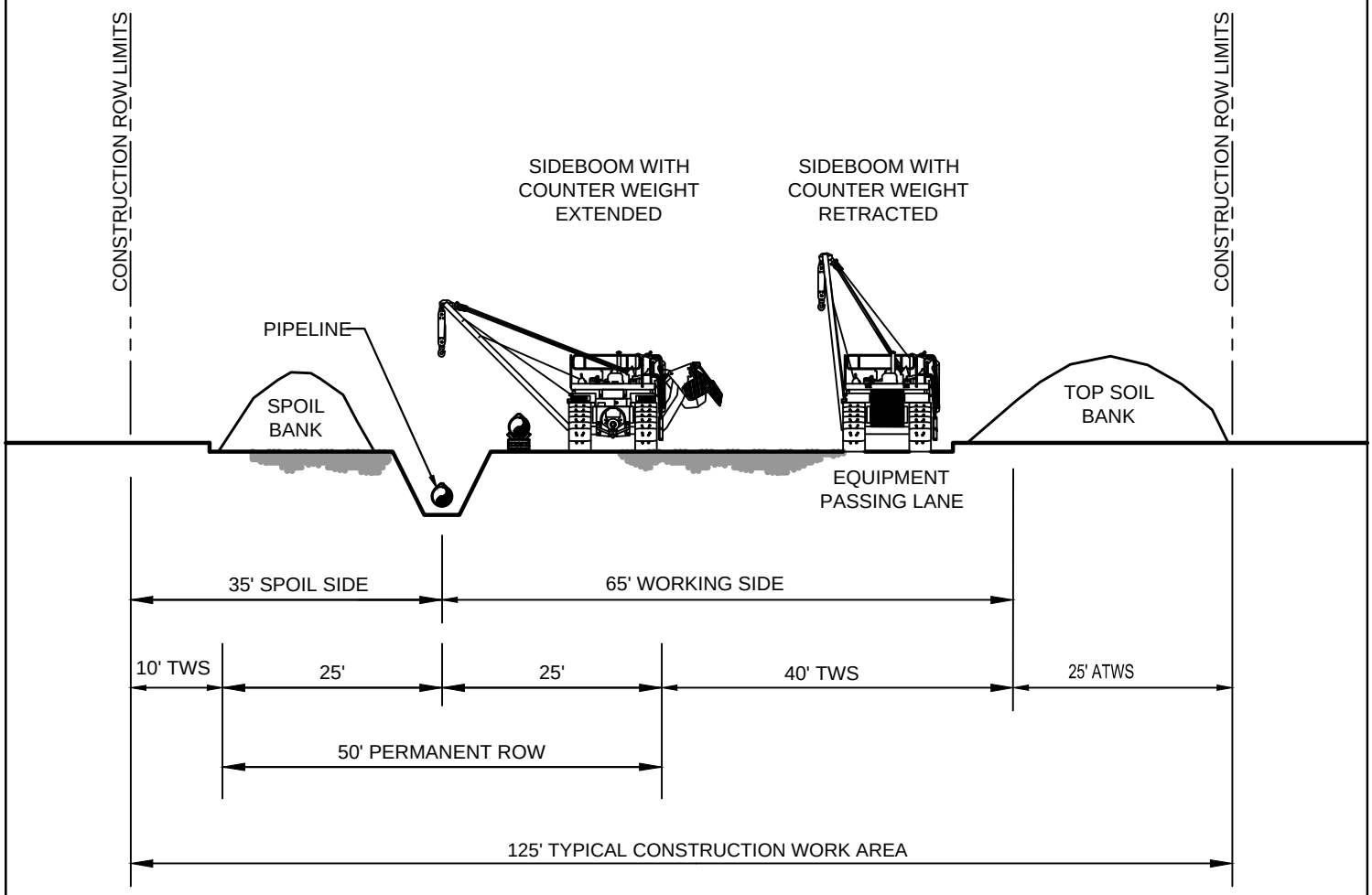

NOTES:

1. THE DIMENSIONS SHOWN ON THIS FIGURE ARE TYPICAL.
2. VARIATIONS FOR STAGING AREAS MAY BE NECESSARY DUE TO SITE-SPECIFIC TERRAIN FEATURES/CROSSINGS.
3. OTHER CONFIGURATIONS OF TOPSOIL AND SUBSOIL ARE ACCEPTABLE PROVIDED THEY ARE KEPT SEPARATE.
4. UP TO 12 INCHES OF TOPSOIL REMOVED.
5. TOPSOIL AND SUBSOIL PILES WILL BE ADEQUATELY PROTECTED FROM EROSION AND SEDIMENTATION.

Know what's below. Call before you dig.

REV	REV	REVISION DESCRIPTION	BY	CKD	APP
D	06/25/15	FERC FINAL	DW	AD	MW
C	04/13/15	FERC DRAFT FILING	MLS	MWC	JMH
B	12/16/14	PRELIMINARY ISSUE	RJC	JAM	JMH
A	11/04/14	ISSUED FOR DRAFT RESOURCE REPORT 1			

PennEast PIPELINE

PREPARED BY: HMM

Hatch Mott MacDonald

PENNEAST PIPELINE PROJECT

TYPICAL AGRICULTURAL WORKSPACE

FIGURE NUMBER: FIGURE 1D

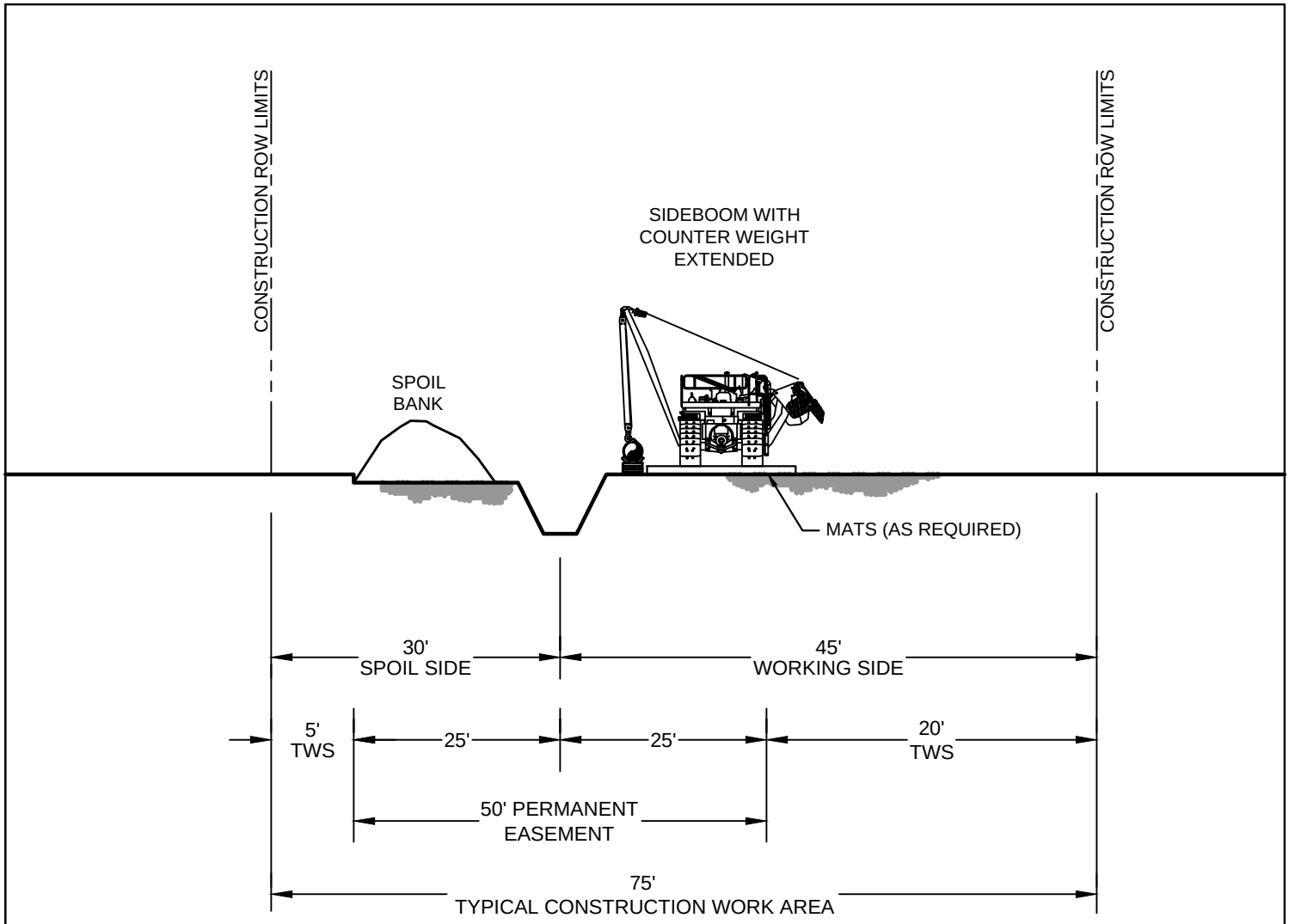

NOTES:

1. FLAG WETLAND BOUNDARIES PRIOR TO CLEARING.
2. CONSTRUCTION ROW NARROWED TO 75 FEET WIDTH MAXIMUM IN ALL WETLANDS.
3. REFUEL STATIONARY EQUIPMENT 100 FEET AWAY FROM WETLAND OR STREAM BOUNDARIES.
4. INSTALL TEMPORARY SLOPE BREAKER UP SLOPE AS DIRECTED BY THE ENVIRONMENTAL INSPECTOR OR OTHER QUALIFIED PROFESSIONAL.
5. AVOID IMPACT AND/OR DISTURBANCE TO ADJACENT WETLANDS. INSTALL SEDIMENT BARRIERS (STRAW BALES AND/OR SILT FENCE) AT EDGE OF ROW AND ALONG WETLAND EDGE AS REQUIRED.
6. RESTRICT ROOT GRUBBING TO ONLY THAT AREA OVER THE DITCHLINE.
7. TOPSOIL STRIPPING SHALL NOT BE REQUIRED IN SATURATED SOIL CONDITIONS.
8. LEAVE FOAM TRENCH PLUGS AT THE EDGE OF SATURATED WETLANDS UNTIL JUST PRIOR TO TRENCHING.
9. INSTALL TIMBER MATS FOR EQUIPMENT CROSSINGS THROUGH ENTIRE WETLAND AREA.
10. WHILE TRENCHING THROUGH WETLANDS, PLACE SPOIL TO ALLOW FOR PROPER SURFACE DRAINAGE.
11. PIPE SECTION MAY BE FABRICATED WITHIN THE WETLAND AND ADJACENT TO ALIGNMENT, OR IN STAGING AREA OUTSIDE THE WETLAND AND WALKED IN.
12. LOWER-IN PIPE, THEN INSTALL PERMANENT TRENCH PLUGS AT WETLAND EDGES AND BACKFILL IMMEDIATELY.
13. REMOVE ANY TIMBER MATS OR PREFABRICATED MATS FROM WETLANDS UPON COMPLETION.
14. RESTORE GRADE TO NEAR PRE-CONSTRUCTION TOPOGRAPHY, REPLACE TOPSOIL IF APPLICABLE AND INSTALL PERMANENT EROSION CONTROL.

Know what's below. Call before you dig.

REV	REV	REVISION DESCRIPTION	BY	CKD	APP
D	06/25/15	FERC FINAL	DW	AD	MW
C	04/13/15	FERC DRAFT FILING	MLS	MWC	JMH
B	12/16/14	PRELIMINARY ISSUE	RJC	JAM	JMH
A	11/04/14	ISSUED FOR DRAFT RESOURCE REPORT 1	JBB	JMA	JMH

PennEast PIPELINE

PREPARED BY: HMM

Hatch Mott MacDonald

PENNEAST PIPELINE PROJECT

TYPICAL WETLAND CROSSSING

FIGURE NUMBER: FIGURE 1E

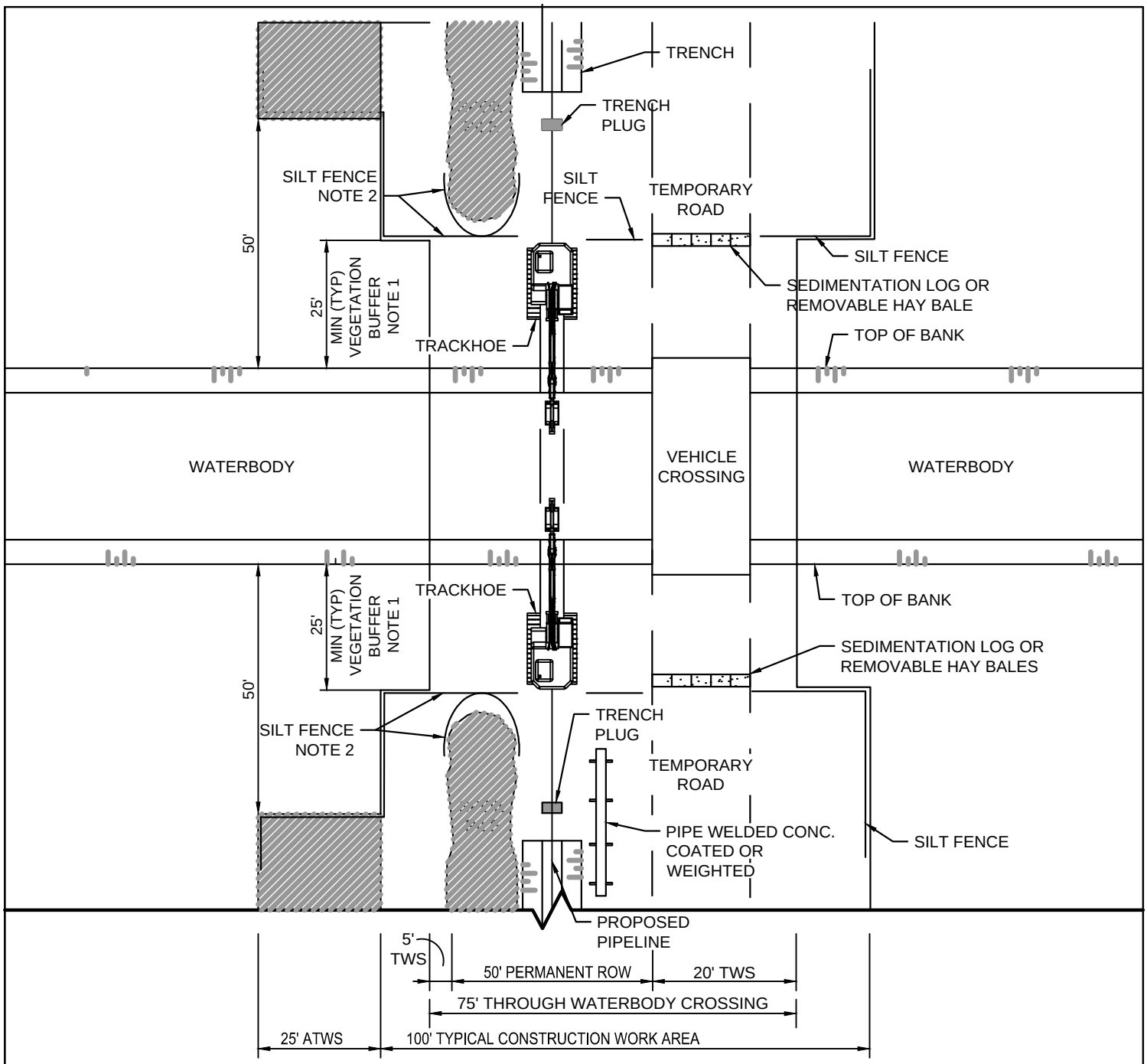

NOTES:

1. THE REQUIRED SET BACK FOR TWS IS 25' FROM TOP OF BANK OR AS SHOWN ON PLANS BASED ON PERMIT REQUIREMENTS.
2. THE MINIMUM REQUIRED SET BACK FOR SPOIL PILE IS 25' FROM THE TOP OF BANK. THIS MATERIAL MUST BE CONTAINED AND SURROUNDED BY SILT FENCE PROTECTION TO PREVENT SATURATED SOIL FROM FLOWING BACK INTO THE WATERBODY.
3. STAKED STRAW BALES MAY BE USED IN LIEU OF SILT FENCE.
4. SCHEDULE CONSTRUCTION DURING LOW FLOW PERIOD TO THE MAXIMUM EXTENT PRACTICABLE.
5. EXCAVATE TRENCH THROUGH PLUGS. WORK IS TO BE COMPLETED AS QUICKLY AS PRACTICABLE.
   A. LOWER IN PIPE AND BACKFILL IMMEDIATELY WITH SPOIL MATERIAL.
   B. IF BLASTING IS REQUIRED, USE CONTROLLED BLASTING TECHNIQUES TO PREVENT DAMAGE TO THE FLOW CONVEYANCE SYSTEM. ALTERNATELY, BLASTING MAY BE ACCOMPLISHED PRIOR TO CONSTRUCTING THE CROSSING.

Know what's below. Call before you dig.

REV	REV	REVISION DESCRIPTION	BY	CKD	APP
D	06/25/15	FERC FINAL	DW	AD	MW
C	04/13/15	FERC DRAFT FILING	MLS	MWC	JMH
B	12/16/14	PRELIMINARY ISSUE	RJC	JAM	JMH
A	11/04/14	ISSUED FOR DRAFT RESOURCE REPORT 1	JBB	JMA	JMH

PennEast PIPELINE

PREPARED BY: HMM

Hatch Mott MacDonald

PENNEAST PIPELINE PROJECT

TYPICAL OPEN CUT WATERBODY CROSSING

FIGURE NUMBER: FIGURE 1F

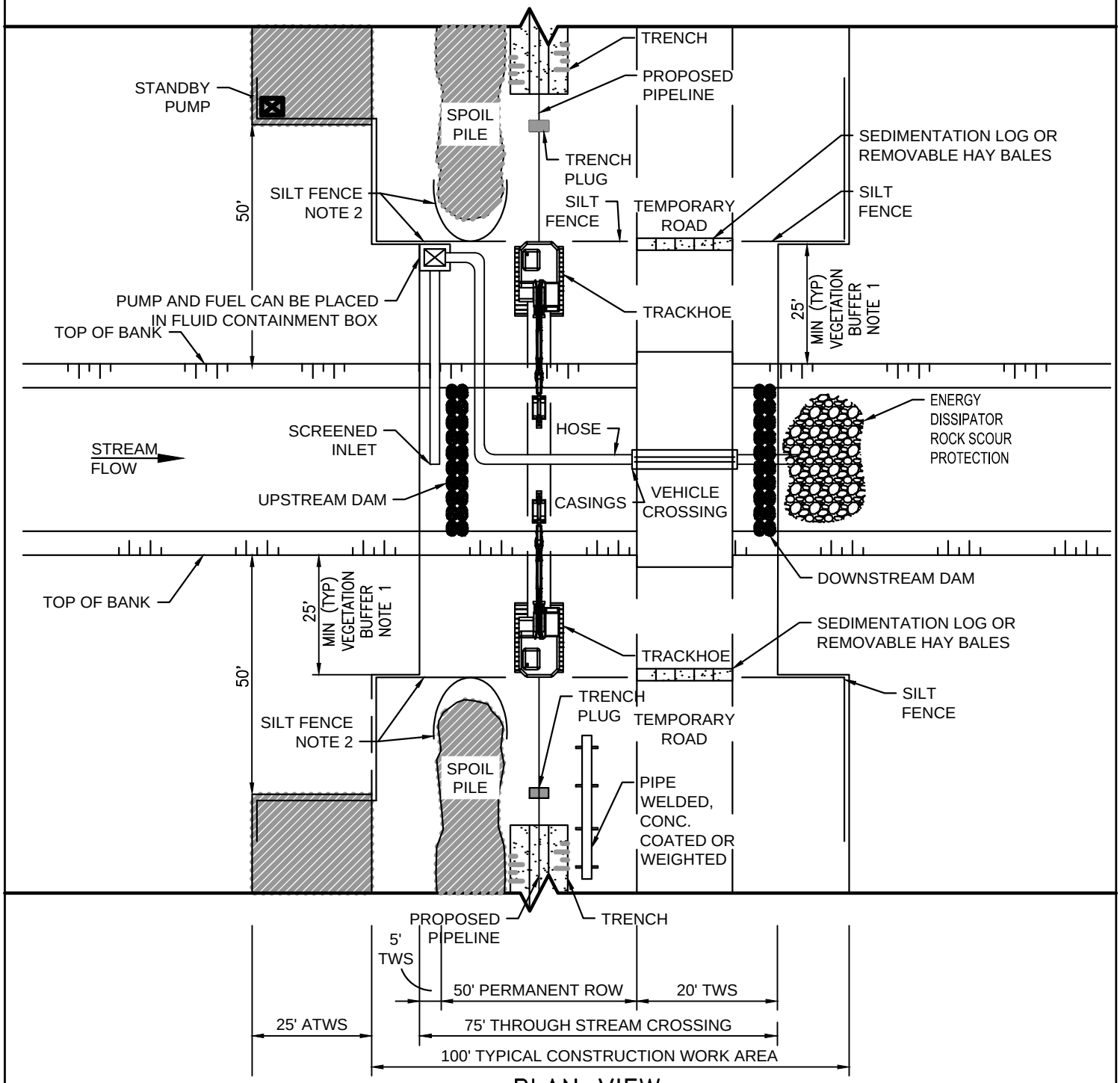

PLAN VIEW

NOTES:

1. THE REQUIRED SET BACK FOR TWS IS 25' FROM TOP OF BANK OR AS SHOWN ON PLANS BASED ON PERMIT REQUIREMENTS.
2. THE MINIMUM REQUIRED SET BACK FOR SPOIL PILE IS 25' FROM THE TOP OF BANK. THIS MATERIAL MUST BE CONTAINED AND SURROUNDED BY SILT FENCE PROTECTION TO PREVENT SATURATED SOIL FROM FLOWING BACK INTO THE WATERBODY.
3. STAKED STRAW BALES MAY BE USED IN LIEU OF SILT FENCE.
4. SCHEDULE CONSTRUCTION DURING LOW FLOW PERIOD TO THE MAXIMUM EXTENT PRACTICABLE.

Know what's below. Call before you dig.

REV	REV	REVISION DESCRIPTION	BY	CKD	APP
D	06/25/15	FERC FINAL	DW	AD	MW
C	04/13/15	FERC DRAFT FILING	MLS	MWC	JMH
B	12/16/14	PRELIMINARY ISSUE	RJC	JAM	JMH
A	11/04/14	ISSUED FOR DRAFT RESOURCE REPORT 1	JBB	JMA	JMH

PennEast PIPELINE

PREPARED BY: HMM

Hatch Mott MacDonald

PENNEAST PIPELINE PROJECT

TYPICAL DAM AND PUMP WATERBODY CROSSING

FIGURE NUMBER: FIGURE 1G

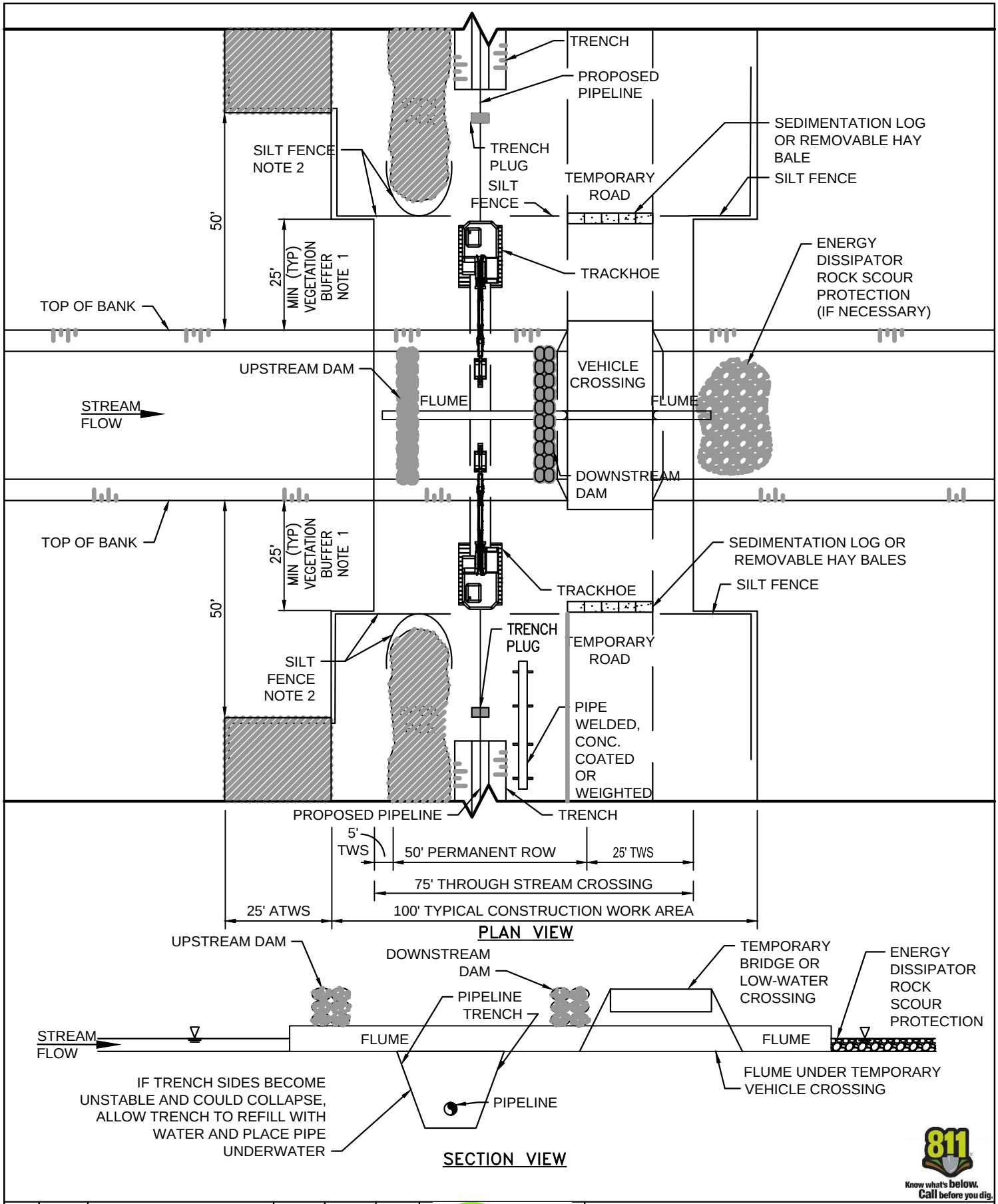

REV	REV	REVISION DESCRIPTION	BY	CKD	APP
D	06/25/15	FERC FINAL	DW	AD	MW
C	04/13/15	FERC DRAFT FILING	MLS	MWC	JMH
B	12/16/14	PRELIMINARY ISSUE	RJC	JAM	JMH
A	11/04/14	ISSUED FOR DRAFT RESOURCE REPORT 1	JBB	JMA	JMH

PennEast PIPELINE

PREPARED BY: HMM

Hatch Mott MacDonald

PENNEAST PIPELINE PROJECT

TYPICAL FLUME WATERBODY CROSSING

FIGURE NUMBER: FIGURE 1H

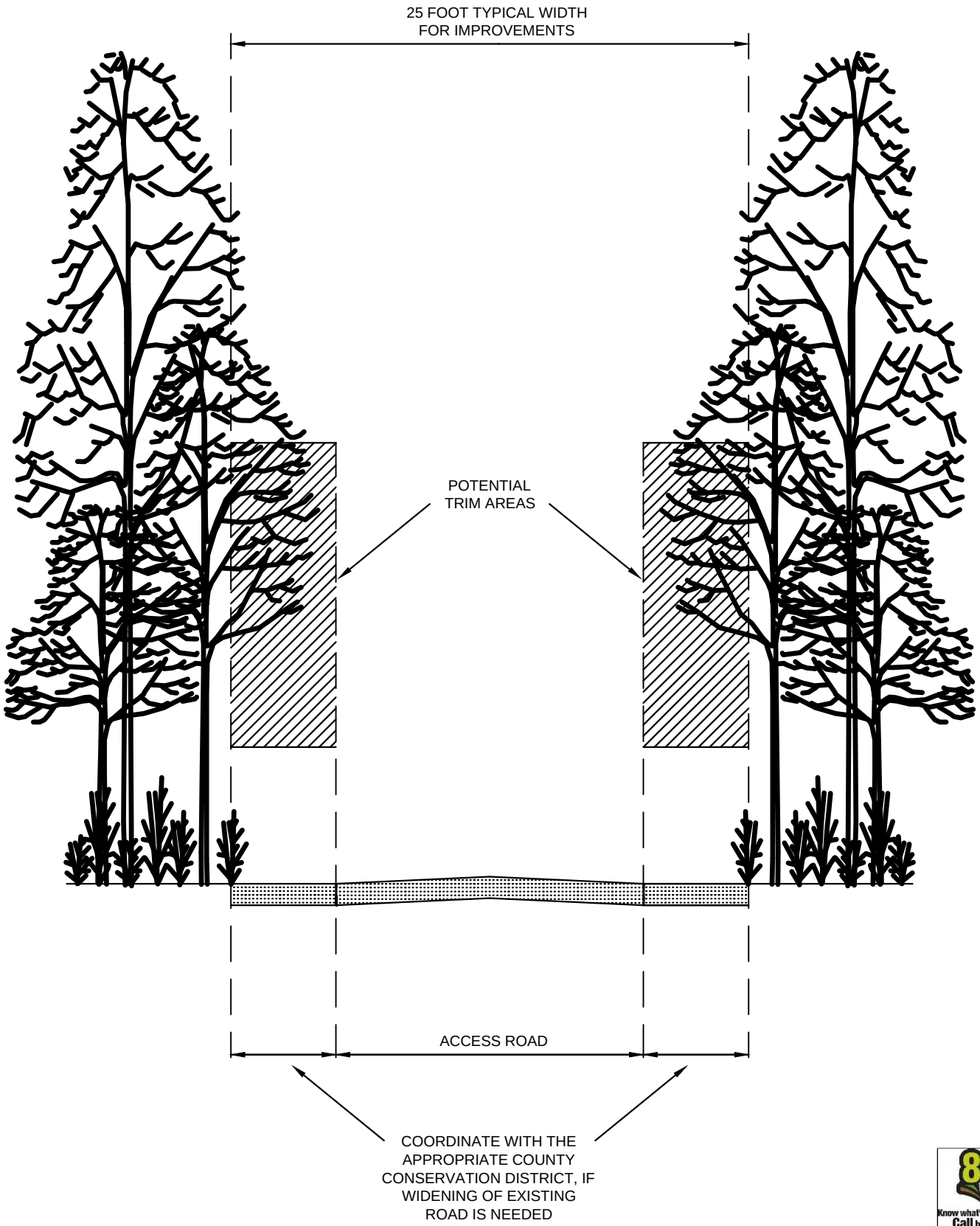

REV	REV	REVISION DESCRIPTION	BY	CKD	APP
D	09/18/15	FERC FINAL	HMM	HMM	HMM
C	04/13/15	FERC DRAFT FILING	MLS	MWC	JMH
B	12/16/14	PRELIMINARY ISSUE	RJC	JAM	JMH
A	11/04/14	ISSUED FOR DRAFT RESOURCE REPORT 1	JBB	JMA	JMH

PennEast PIPELINE

PREPARED BY: HMM

Hatch Mott MacDonald

PENNEAST PIPELINE PROJECT

ACCESS ROAD CROSS SECTION

FIGURE NUMBER: FIGURE 1I

Know what's below. Call before you dig.

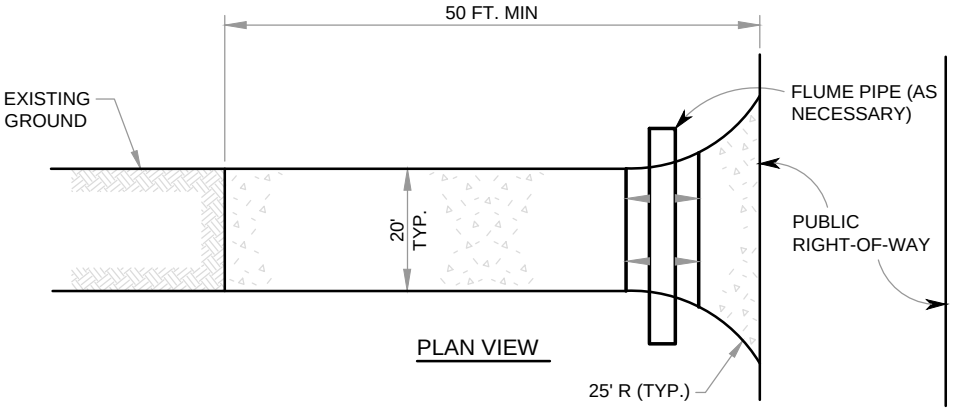

PLAN VIEW

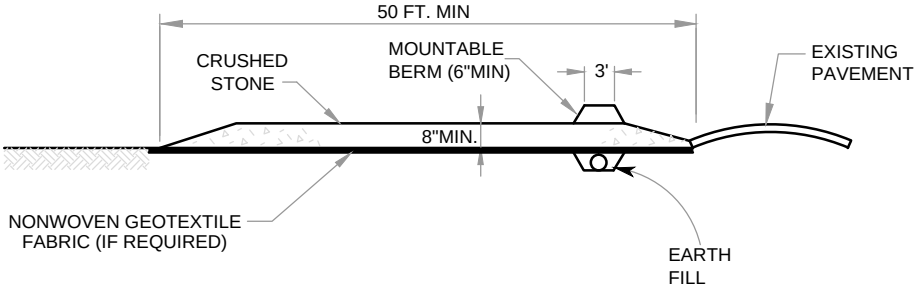

CROSS-SECTION

CONSTRUCTION SPECIFICATIONS:

1. STONE SIZE = AASHTO# 1: 1 1/2" - 3 1/2" CRUSHED STONE
2. ALL STONE MUST BE PLACED ON NON-WOVEN GEOTEXILE FABRIC IF USED IN RESIDENTIAL OR ACTIVE AGRICULTURAL AREAS.
3. LENGTH = FIFTY (50) FEET MIN. (IF SITE CONDITIONS ALLOW)
4. WIDTH = TWENTY (20) FEET TYPICAL.
5. THICKNESS = EIGHT (8) INCHES MINIMUM. (IF SITE CONDITIONS ALLOW)
6. ALL SURFACE WATER FLOWING OR DIVERTED TOWARD CONSTRUCTION ENTRANCES SHALL BE PIPED ACROSS THE ENTRANCE. IF PIPING IS IMPRACTICAL, A DRIVEABLE BERM OR OTHER TEMPORARY EROSION CONTROL DEVICE CAN BE USED.
7. THE ENTRANCE SHALL BE PERIODICALLY INSPECTED AND MAINTAINED IN A CONDITION THAT MINIMIZES TRACKING OR FLOWING OF SEDIMENT ONTO PUBLIC RIGHTS-OF-WAY. MAINTENANCE MAY INCLUDE PERIODIC TOP DRESSING WITH ADDITIONAL STONE OR THE REPAIR / CLEANOUT OF ANY MEASURES USED TO TRAP SEDIMENT. ANY SEDIMENT THAT IS SPILLED, DROPPED, WASHED OR TRACKED ONTO PUBLIC RIGHTS-OF-WAY MUST BE REMOVED AS SOON AS PRACTICAL. WASHING OR SWEEPING THE DEPOSITS INTO ROADWAY DITCHES, CULVERTS OR OTHER DRAINAGES IS NOT ACCEPTABLE.

Know what's below. Call before you dig.

REV	REV	REVISION DESCRIPTION	BY	CKD	APP
D	09/18/15	FERC FINAL	HMM	HMM	HMM
C	04/13/15	FERC DRAFT FILING	MLS	MWC	JMH
B	12/16/14	PRELIMINARY ISSUE	RJC	JAM	JMH
A	11/04/14	ISSUED FOR DRAFT RESOURCE REPORT 1	JBB	JMA	JMH

PennEast PIPELINE

PREPARED BY: Hatch Mott MacDonald

PENNEAST PIPELINE PROJECT

ROCK ACCESS PAD INSTALLATION AND MAINTENANCE

FIGURE 2

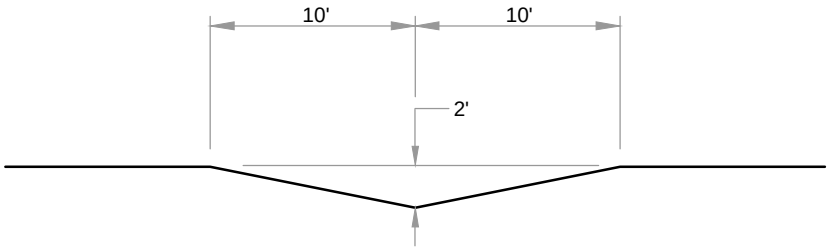

PROFILE

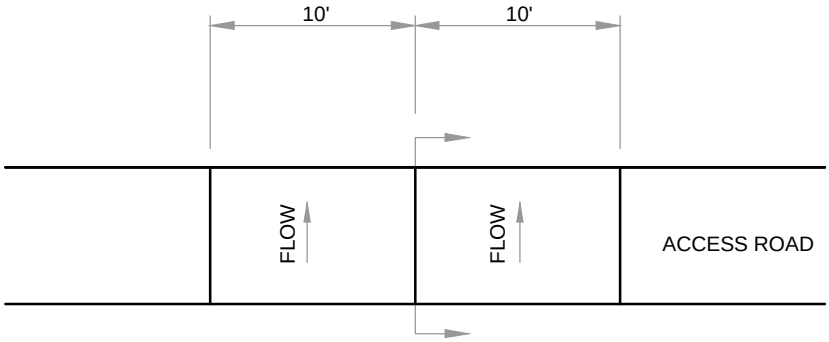

PLAN

- BROAD-BASED DIPS SHALL BE CONSTRUCTED TO THE DIMENSIONS SHOWN AND AT THE LOCATIONS SHOWN ON THE PLAN DRAWINGS.
- DIPS SHALL BE ORIENTED SO AS TO DISCHARGE TO THE LOW SIDE OF THE ROADWAY.
- DIPS SHALL BE INSPECTED DAILY. DAMAGED OR NON-FUNCTIONING DIPS SHALL BE REPAIRED BY THE END OF THE WORKDAY.
- MAXIMUM SPACING OF BROAD-BASED DIPS SHALL BE AS SHOWN ON FIGURE 3B.
- DISCHARGES SHOULD BE TO THE DOWN SLOPE SIDE OF ACCESS ROADS WITH A MAXIMUM GRADIENT OF 3% IN THE DIP.
- ACCESS ROADS WITH STEEPER GRADE SHOULD USE FIGURE 3B.

Know what's below. Call before you dig.

REV	REV	REVISION DESCRIPTION	BY	CKD	APP
D	09/18/15	FERC FINAL	HMM	HMM	HMM
C	04/13/15	FERC DRAFT FILING	MLS	MWC	JMH
B	12/16/14	PRELIMINARY ISSUE	RJC	JAM	JMH
A	11/04/14	ISSUED FOR DRAFT RESOURCE REPORT 1	JBB	JMA	JMH

PennEast PIPELINE

PREPARED BY: Hatch Mott MacDonald

PENNEAST PIPELINE PROJECT

BROAD-BASED DIP FOR LOW GRADIENT (≤5%) ROADWAYS

FIGURE 3A

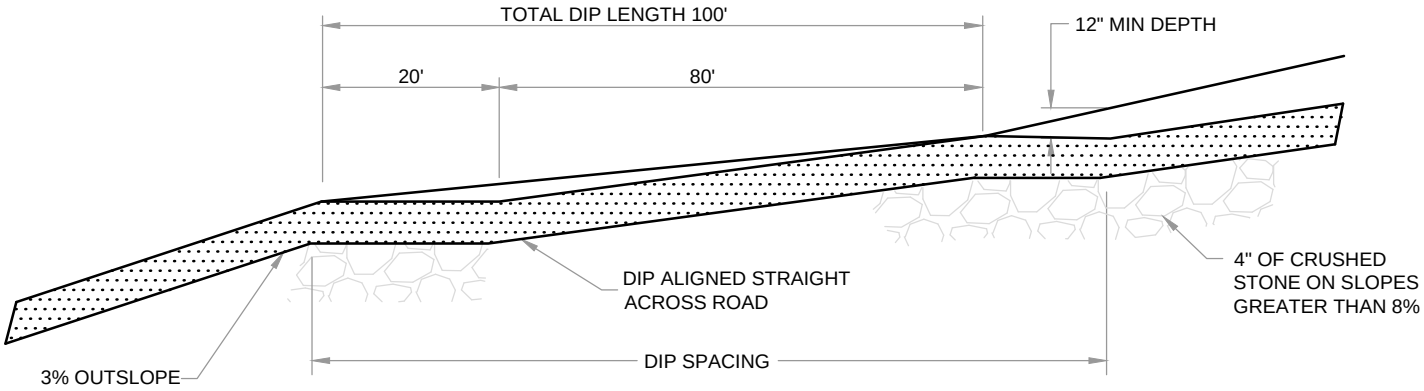

BROAD-BASED DIPS SHALL BE CONSTRUCTED TO THE DIMENSIONS SHOWN AND AT THE LOCATIONS SHOWN ON THE PLAN DRAWINGS.

DIPS SHALL BE ORIENTED SO AS TO DISCHARGE TO THE LOW SIDE OF THE ROADWAY.

DIPS SHALL BE INSPECTED DAILY. DAMAGED OR NON-FUNCTIONING DIPS SHALL BE REPAIRED BY THE END OF THE WORKDAY.

MAXIMUM SPACING OF BROAD-BASED DIPS SHALL BE AS SHOWN IN THE TABLE BELOW.

DISCHARGES SHOULD BE TO THE DOWNSLOPE SIDE OF THE ACCESS ROADS WITH A MAXIMUM GRADIENT OF 3% IN THE DIP.

MAXIMUM SPACING OF BROAD-BASED DIPS

Road Grade (Percent)	Spacing Between Dips, Culverts, or Diflectors (feet)
<2	300
3	235
4	200
5	180
6	165
7	155
8	150
9	145
10	140

Know what's below. Call before you dig.

REV	REV	REVISION DESCRIPTION	BY	CKD	APP
D	09/18/15	FERC FINAL	HMM	HMM	HMM
C	04/13/15	FERC DRAFT FILING	MLS	MWC	JMH
B	12/16/14	PRELIMINARY ISSUE	RJC	JAM	JMH
A	11/04/14	ISSUED FOR DRAFT RESOURCE REPORT 1	JBB	JMA	JMH

PennEast PIPELINE

PREPARED BY: Hatch Mott MacDonald

PENNEAST PIPELINE PROJECT

BROAD-BASED DIP FOR HIGH GRADIENT (5%-10% MAXIMUM) ROADWAYS

FIGURE 3B

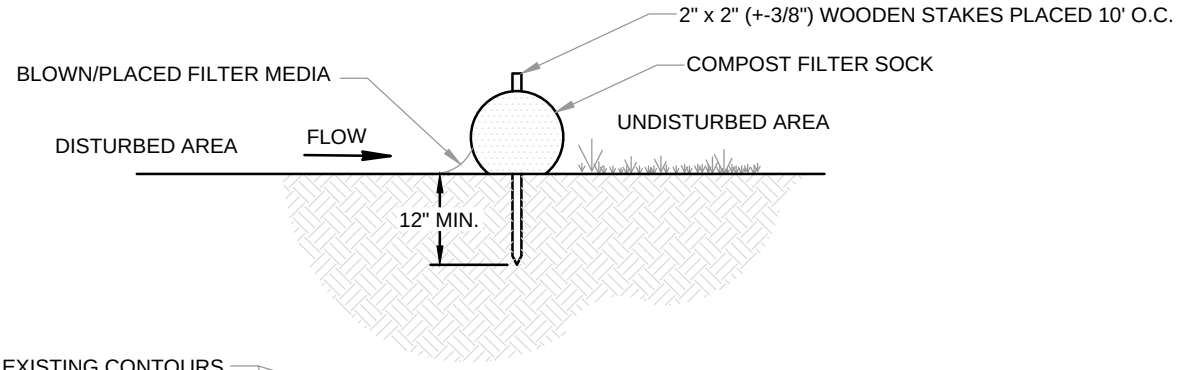

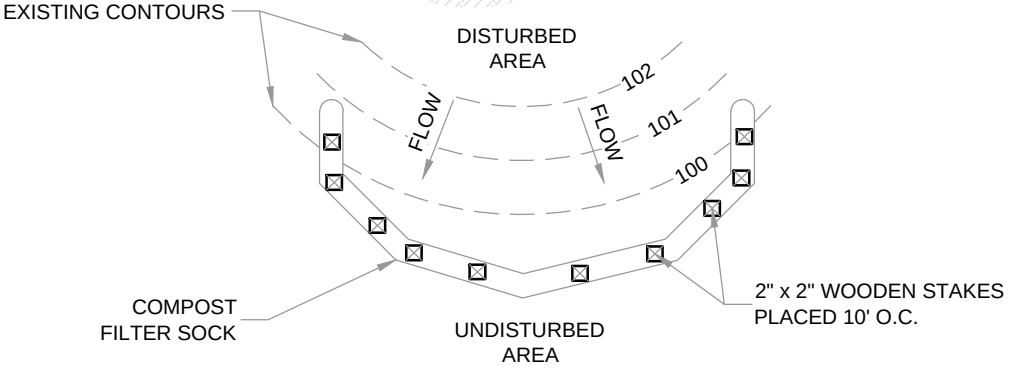

ADAPTED FROM FILETREXX

SOCK FABRIC SHALL MEET MINIMUM SPECIFICATIONS OF
TABLE 4.1. COMPOST SHALL MEET THE FOLLOWING STANDARDS:

ORGANIC MATTER CONTENT	25% - 100% (DRY WEIGHT BASIS)
ORGANIC PORTION	FIBROUS AND ELONGATED
pH	5.5 - 8.5
MOISTURE CONTENT	30% - 60%
PARTICLE SIZE	30-50% PASS THROUGH 3/8" SCREEN
SOLUBLE SALT CONCENTRATION	5.0 dS MAXIMUM

NOTES:

1. COMPOST FILTER SOCK SHALL BE PLACED AT EXISTING LEVEL GRADE. BOTH ENDS OF THE SOCK SHALL BE EXTENDED AT LEAST 8 FEET UP SLOPE AT 45 DEGREES TO THE MAIN SOCK ALIGNMENT.
2. TRAFFIC SHALL NOT BE PERMITTED TO CROSS FILTER SOCKS.
3. ACCUMULATED SEDIMENT SHALL BE REMOVED WHEN IT REACHES 1/2 THE ABOVE GROUND HEIGHT OF THE SOCK AND DISPOSED IN THE MANNER DESCRIBED ELSEWHERE IN THE PLAN.
4. SOCKS SHALL BE INSPECTED WEEKLY AND AFTER EACH RUNOFF EVENT. DAMAGED SOCKS SHALL BE REPAIRED ACCORDING TO MANUFACTURER'S SPECIFICATIONS OR REPLACED WITHIN 24 HOURS OF INSPECTION.
5. BIODEGRADABLE FILTER SOCK SHALL BE REPLACED AFTER 6 MONTHS; PHOTODEGRADABLE SOCKS AFTER 1 YEAR. POLYPROPYLENE SOCKS SHALL BE REPLACED ACCORDING TO MANUFACTURER'S RECOMMENDATIONS.
6. UPON STABILIZATION OF THE AREA TRIBUTARY TO THE SOCK. STAKES SHALL BE REMOVED. THE SOCK MAY BE LEFT IN PLACE AND VEGETATED OR REMOVED. IN THE LATTER CASE, THE MESH SHALL BE CUT OPEN AND THE MULCH SPREAD AS SOIL SUPPLEMENT.
7. THIS BMP IS AN APPROVED ABACT (ANTIDEGRADATION BEST AVAILABLE COMBINATION OF TECHNOLOGIES) FOR USE IN HQ/EV WATERSHEDS.
8. 18" COMPOST FILTER SOCK MAY BE SUBSTITUTED FOR SUPER SILT FENCE.
9. 12" COMPOST FILTER SOCK MAY BE SUBSTITUTED FOR 18" TO 30" SILT FENCE

Know what's below. Call before you dig.

REV	REV	REVISION DESCRIPTION	BY	CKD	APP
D	09/18/15	FERC FINAL	HMM	HMM	HMM
C	04/13/15	FERC DRAFT FILING	MLS	MWC	JMH
B	12/16/14	PRELIMINARY ISSUE	RJC	JAM	JMH
A	11/04/14	ISSUED FOR DRAFT RESOURCE REPORT 1	JBB	JMA	JMH

PennEast PIPELINE

PREPARED BY: Hatch Mott MacDonald

PENNEAST PIPELINE PROJECT

STANDARD CONSTRUCTION
COMPOST FILTER SOCK

FIGURE 4

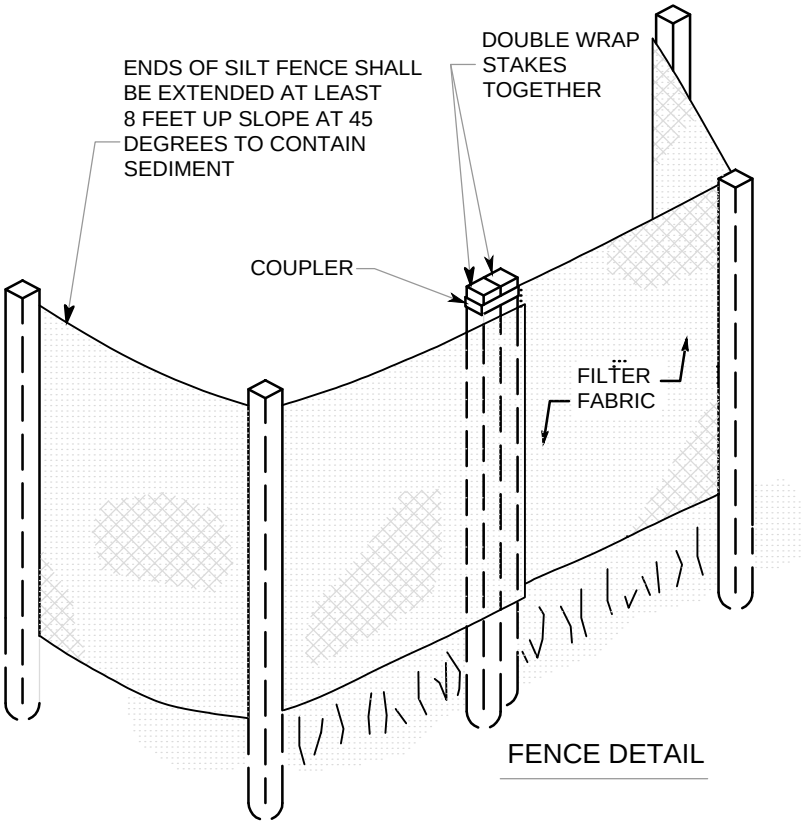

FENCE DETAIL

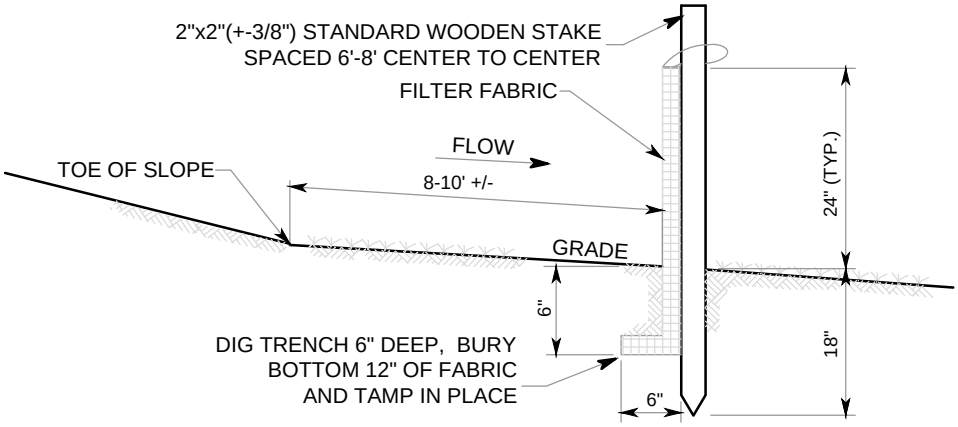

CROSS SECTION

INSTALLATION REQUIREMENTS:

WHEN USING SILT FENCE, PLACE IT:

BETWEEN DISTURBED AREAS AND DOWN-SLOPE ENVIRONMENTAL RESOURCE AREAS

AT THE BASE OF ALL SLOPES NEXT TO WETLANDS, WATERBODIES, AND ROAD CROSSINGS

AT THE INLET AND OUTLET OF OPEN DRAINAGE STRUCTURES

APPROXIMATELY 8-10 FEET BEYOND THE TOE OF THE SLOPE TO GIVE THE SEDIMENT ROOM TO COLLECT

USE SANDBAGS TO KEY IN THE BOTTOM OF THE FABRIC WHERE IT IS NOT FEASIBLE TO TRENCH IT IN (LEDGES, ROCKY SOIL. LARGE ROOTS, ETC.) THIS CAN ONLY BE IMPLEMENTED FOR SMALL AREAS. (< 10 LINEAR FEET)

MAINTENANCE REQUIREMENTS:

- INSPECT SILT FENCE:
  - DAILY IN AREAS OF ACTIVE CONSTRUCTION

    WEEKLY IN AREAS WITH NO CONSTRUCTION

    WITHIN 24 HOURS FOLLOWING EACH STORMWATER EVENT

REPAIR OR REPLACE SILT FENCE AS NEEDED

REMOVE ACCUMULATED SEDIMENTS TO AN UPLAND AREA WHEN SEDIMENTREACHES 1/2 THE ABOVE GROUND HEIGHT OF FENCE

Know what's below. Call before you dig.

REV	REV	REVISION DESCRIPTION	BY	CKD	APP
D	09/18/15	FERC FINAL	HMM	HMM	HMM
C	04/13/15	FERC DRAFT FILING	MLS	MWC	JMH
B	12/16/14	PRELIMINARY ISSUE	RJC	JAM	JMH
A	11/04/14	ISSUED FOR DRAFT RESOURCE REPORT 1	JBB	JMA	JMH

PennEast PIPELINE

PREPARED BY: Hatch Mott MacDonald

PENNEAST PIPELINE PROJECT

SILT FENCE INSTALLATION AND MAINTENANCE

FIGURE 5

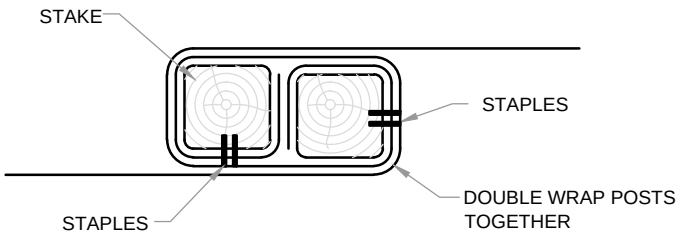

JOINING FENCE SECTIONS

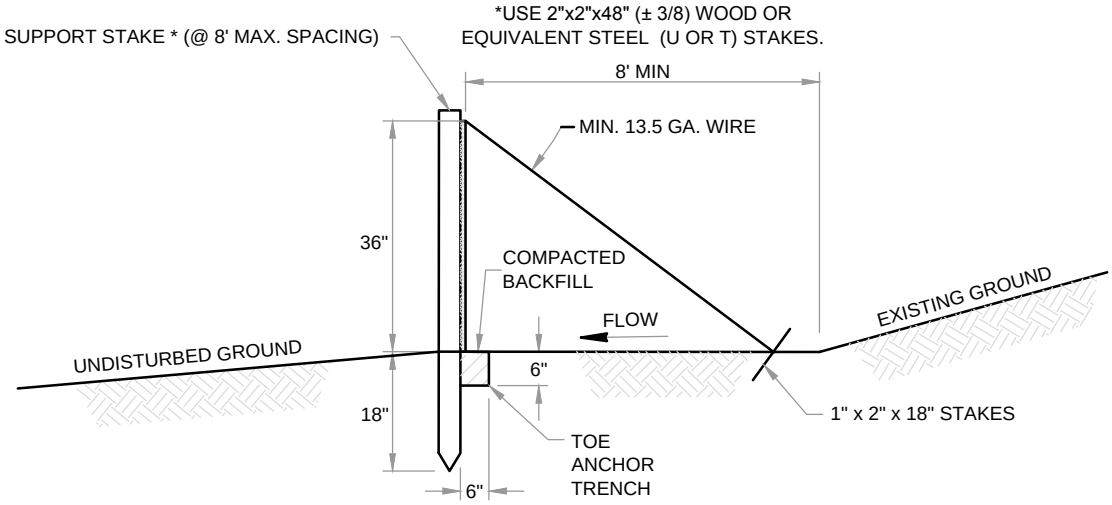

FABRIC WIDTH SHALL BE 48" MINIMUM. STAKES SHALL BE HARDWOOD OR EQUIVALENT STEEL (U OR T) STAKES. AN 18" SUPPORT STAKE SHALL BE DRIVEN 12" MINIMUM INTO UNDISTURBED GROUND.

FILTER FABRIC FENCE MUST BE PLACED AT EXISTING LEVEL GRADE. BOTH ENDS OF EACH FENCE SECTION MUST BE EXTENDED AT LEAST 8 FEET UP SLOPE AT 45 DEGREES TO THE MAIN FENCE ALIGNMENT.

SEDIMENT MUST BE REMOVED WHEN ACCUMULATIONS REACH 1/2 THE ABOVE GROUND HEIGHT OF THE FENCE.

ANY SECTION OF SILT FENCE WHICH HAS BEEN UNDERMINED OR TOPPED SHALL BE IMMEDIATELY REPLACED WITH A ROCK FILTER OUTLET.

FENCE SHALL BE MOVE AND PROPERLY DISPOSED OF WHEN TRIBUTARY AREA IS PERMANENTLY STABILIZED.

Know what's below. Call before you dig.

REV	REV	REVISION DESCRIPTION	BY	CKD	APP
D	09/18/15	FERC FINAL	HMM	HMM	HMM
C	04/13/15	FERC DRAFT FILING	MLS	MWC	JMH
B	12/16/14	PRELIMINARY ISSUE	RJC	JAM	JMH
A	11/04/14	ISSUED FOR DRAFT RESOURCE REPORT 1	JBB	JMA	JMH

PennEast PIPELINE

PREPARED BY: Hatch Mott MacDonald

PENNEAST PIPELINE PROJECT

REINFORCED (HEAVE DUTY 36") SILT FENCE

FIGURE 6

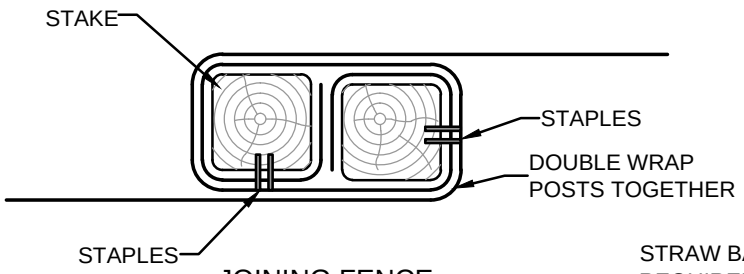

JOINING FENCE SECTIONS

STRAW BALE BACKING
REQUIRED FOR FABRIC FENCE
TALLER THAN 24" ABOVE GRADE
(STRAW BALE DEPICTED N.T.S.)

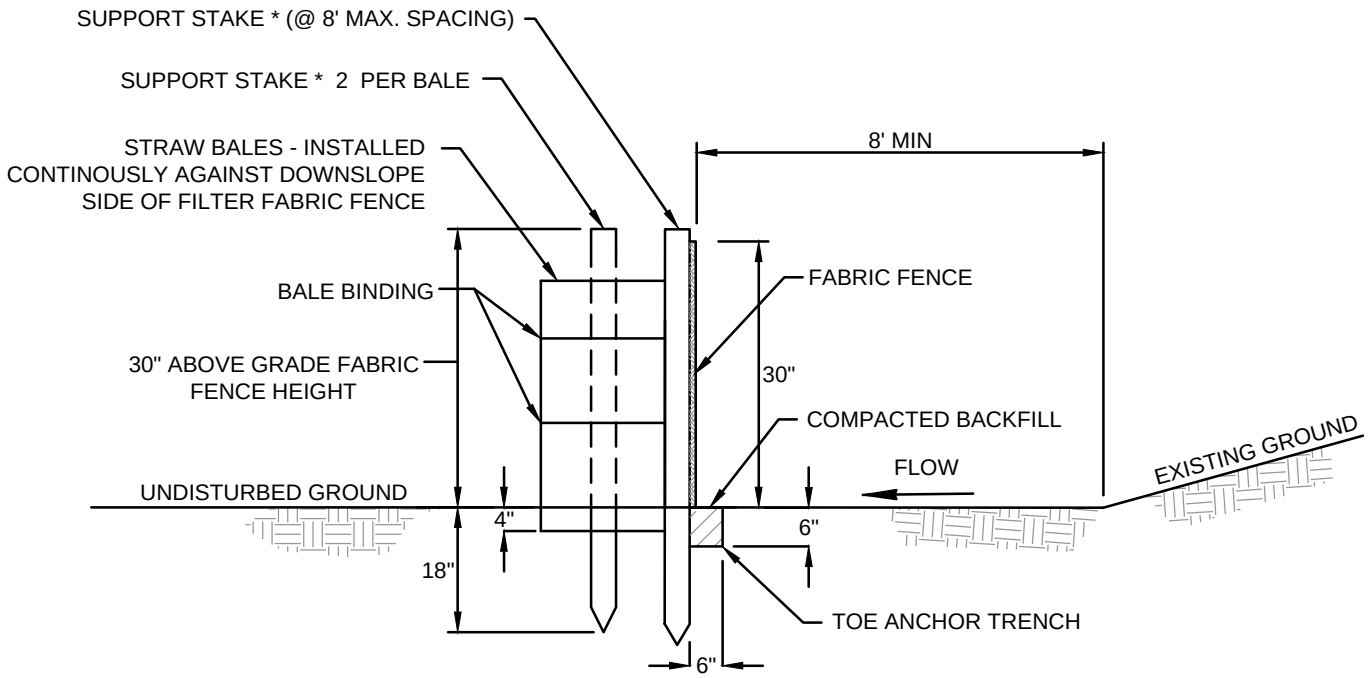

*USE 2"x2"x48" (± 3/8) WOOD
OR EQUIVALENT STEEL STAKES

WIDTH SHALL BE 42" MINIMUM. STAKES SHALL BE HARDWOOD OR EQUIVALENT STEEL (U OR T) STAKES.

FILTER FABRIC FENCE MUST BE PLACED AT EXISTING LEVEL GRADE. BOTH ENDS OF EACH FENCE SECTION MUST BE EXTENDED AT LEAST 8 FEET UP SLOPE AT 45 DEGREES TO THE MAIN FENCE ALIGNMENT.

SEDIMENT MUST BE REMOVED WHEN ACCUMULATIONS REACH 1/2 THE ABOVE GROUND HEIGHT OF THE FENCE.

Know what's below. Call before you dig.

REV	REV	REVISION DESCRIPTION	BY	CKD	APP
D	09/18/15	FERC FINAL	HMM	HMM	HMM
C	04/13/15	FERC DRAFT FILING	MLS	MWC	JMH
B	12/16/14	PRELIMINARY ISSUE	RJC	JAM	JMH
A	11/04/14	ISSUED FOR DRAFT RESOURCE REPORT 1	JBB	JMA	JMH

PennEast PIPELINE

PREPARED BY: Hatch Mott MacDonald

PENNEAST PIPELINE PROJECT

FILTER FENCE REINFORCED BY STAKED STRAW BALES

FIGURE 7

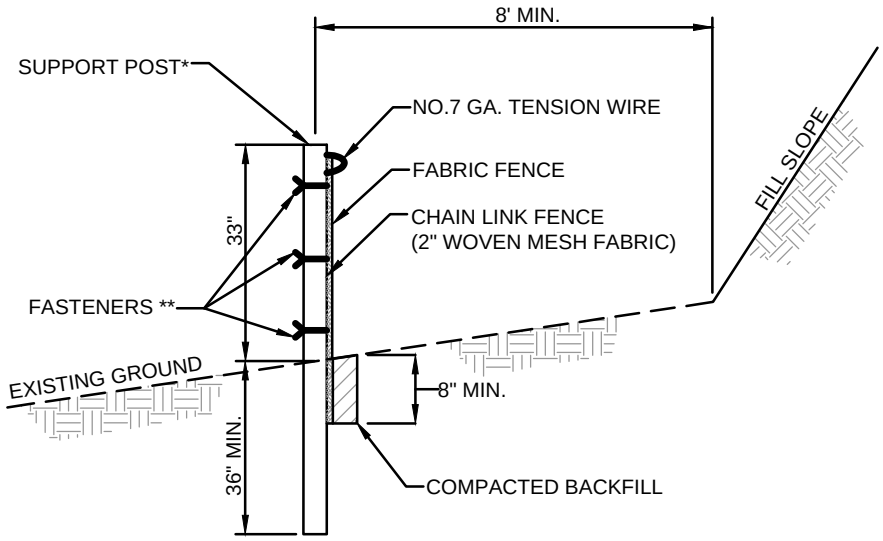

*POSTS SPACED @ 10' MAX. USE 2 1/2" DIA. HEAVY DUTY GALVANIZED OR ALUMINUM POSTS.

**CHAIN LINK TO POST FASTENERS SPACED @ 14" MAX. USE ALUMINUM WIRE OR NO. 9 GALVANIZED STEEL PRE-FORMED CLIPS. CHAINLINK TO TENSION WIRE FASTENERS SPACED @ 60" MAX. USE NO. 13.5 GA. GALVANIZED STEEL WIRE. FABRIC TO CHAIN FASTENERS SPACED @ 24" MAX C. TO C.

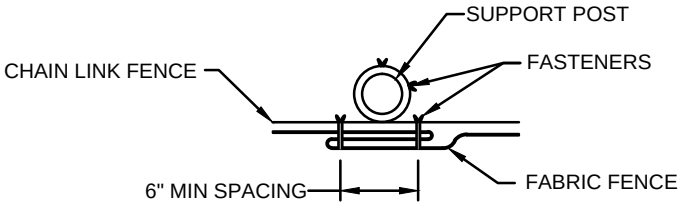

JOINING FENCE SECTIONS

NOTES:

1. FILTER FABRIC WIDTH SHALL BE 42" MINIMUM.
2. CHAIN LINK SHALL BE GALVANIZED NO. 11.5 GA. STEEL WIRE WITH 2 ¼" OPENING, NO. 11 GA. ALUMINUM COATED STEEL WIRE IN ACCORDANCE WITH ASTM-A-491, OR GALVANIZED NO. 9 STEEL WIRE TOP AND BOTTOM WITH GALVANIZED NO. 11 GA. STEEL INTERMEDIATE WIRES. NO. 7 GA. TENSION WIRE INSTALLED HORIZONTALLY THROUGH HOLES AT TOP AND BOTTOM OF CHAIN-LINK FENCE OR ATTACHED WITH HOG RINGS AT 5' (MAX.) CENTERS.
3. SILT FENCE SHALL BE PLACED AT EXISTING LEVEL GRADE. BOTH ENDS OF THE BARRIER MUST BE EXTENDED AT LEAST 8 FEET UPSLOPE AT 45 DEGREES TO MAIN BARRIER ALIGNMENT.
4. SEDIMENT SHALL BE REMOVED WHEN ACCUMULATIONS REACH 1/2 THE ABOVE GROUND HEIGHT OF THE FENCE.
5. FENCE SHALL BE REMOVED AND PROPERLY DISPOSED OF WHEN TRIBUTARY AREA IS PERMANENTLY STABILIZED.

Know what's below. Call before you dig.

REV	REV	REVISION DESCRIPTION	BY	CKD	APP
D	09/18/15	FERC FINAL	HMM	HMM	HMM
C	04/13/15	FERC DRAFT FILING	MLS	MWC	JMH
B	12/16/14	PRELIMINARY ISSUE	RJC	JAM	JMH
A	11/04/14	ISSUED FOR DRAFT RESOURCE REPORT 1	JBB	JMA	JMH

PennEast PIPELINE

PREPARED BY: Hatch Mott MacDonald

PENNEAST PIPELINE PROJECT

SUPER FILTER FABRIC FENCE
(SUPER SILT FENCE)

FIGURE 8

TABLE 4.3
Maximum Slope Length for Filter Fabric Fence

	Maximum Slope Length (ft) Above Fence	
Slope - Percent	Standard (18" High) Silt fence	Super Silt Fence
2 (or less)	150	1000
5	100	550
10	50	325
15	35	215
20	25	175
25	20	135
30	15	100
35	15	85
40	15	75
45	10	60
50	10	50

PA DEP

Maximum Slope Length for Compost Filter Sock

	Maximum Slope Length (ft) Above Sock				
	Filter Sock Diameter (inches)				
Slope - Percent	8	12	18	24	32
5	200	200	350	500	650
10	100	150	250	300	400
15	50	100	200	250	350
20	25	70	150	200	250
25	20	50	100	150	200
30	20	40	80	100	125
>35	20	40	60	90	100

ADAPTED FROM PA DEP GRAPH

Know what's below. Call before you dig.

REV	REV	REVISION DESCRIPTION	BY	CKD	APP
D	09/18/15	FERC FINAL	HMM	HMM	HMM
C	04/13/15	FERC DRAFT FILING	MLS	MWC	JMH
B	12/16/14	PRELIMINARY ISSUE	RJC	JAM	JMH
A	11/04/14	ISSUED FOR DRAFT RESOURCE REPORT 1	JBB	JMA	JMH

PennEast PIPELINE

PREPARED BY: Hatch Mott MacDonald

PENNEAST PIPELINE PROJECT

MAXIMUM SLOPE LENGTH FOR FILTER FABRIC FENCE AND COMPOST FILTER SOCK

FIGURE 9

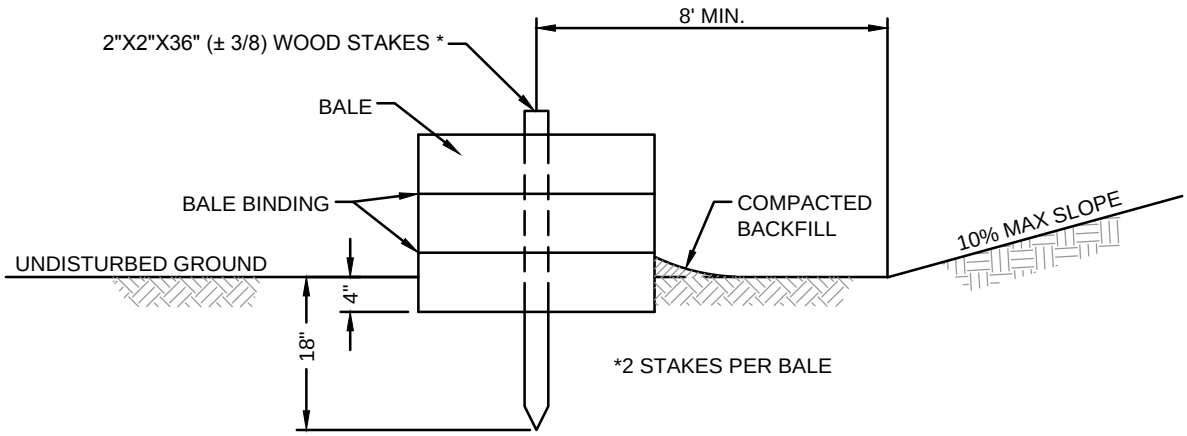

1. STRAW BALE BARRIER SHALL NOT BE USED FOR PROJECTS EXTENDING MORE THAN 3 MONTHS.

2. STRAW BALE BARRIER SHALL BE PLACED AT EXISTING LEVEL GRADE WITH ENDS TIGHTLY ABUTTING THE ADJACENT BALES. FIRST STAKE OF EACH BALE SHALL BE ANGLED TOWARD ADJACENT BALE TO DRAW BALES TOGETHER. STAKES SHALL BE DRIVEN FLUSH WITH THE TOP OF THE BALE. BOTH ENDS OF THE BARRIER SHALL BE EXTENDED AT LEAST 8 FEET UP SLOPE AT 45 DEGREES TO THE MAIN BARRIER ALIGNMENT.

3. COMPACTED BACKFILL TO EXTEND APPROXIMATELY 4 INCHES ABOVE GROUND LEVEL.

4. BARRIER SHALL BE INSPECTED WEEKLY AFTER EACH RUNOFF EVENT. SEDIMENT SHALL BE REMOVED WHEN ACCUMULATIONS REACH 1/3 THE ABOVE GROUND HEIGHT OF THE BARRIER. DAMAGED OR DETERIORATED BALES SHALL BE REPLACED IMMEDIATELY UPON INSPECTION.

5. ANY SECTION OF STRAW BALE BARRIER WHICH HAS BEEN UNDERMINED OR TOPPED SHALL BE IMMEDIATELY REPLACED WITH A ROCK FILTER OUTLET. SEE FIGURE #11.

6. BALES SHALL BE REMOVED WHEN THE TRIBUTARY AREA HAS BEEN PERMANENTLY STABILIZED.

7. STRAW BALE BARRIER MAY BE SUBSTITUTED FOR 18" SILT FENCE.

Know what's below. Call before you dig.

REV	REV	REVISION DESCRIPTION	BY	CKD	APP
D	09/18/15	FERC FINAL	HMM	HMM	HMM
C	04/13/15	FERC DRAFT FILING	MLS	MWC	JMH
B	12/16/14	PRELIMINARY ISSUE	RJC	JAM	JMH
A	11/04/14	ISSUED FOR DRAFT RESOURCE REPORT 1	JBB	JMA	JMH

PennEast PIPELINE

PREPARED BY: Hatch Mott MacDonald

PENNEAST PIPELINE PROJECT

STRAW BALE BARRIER

FIGURE 10

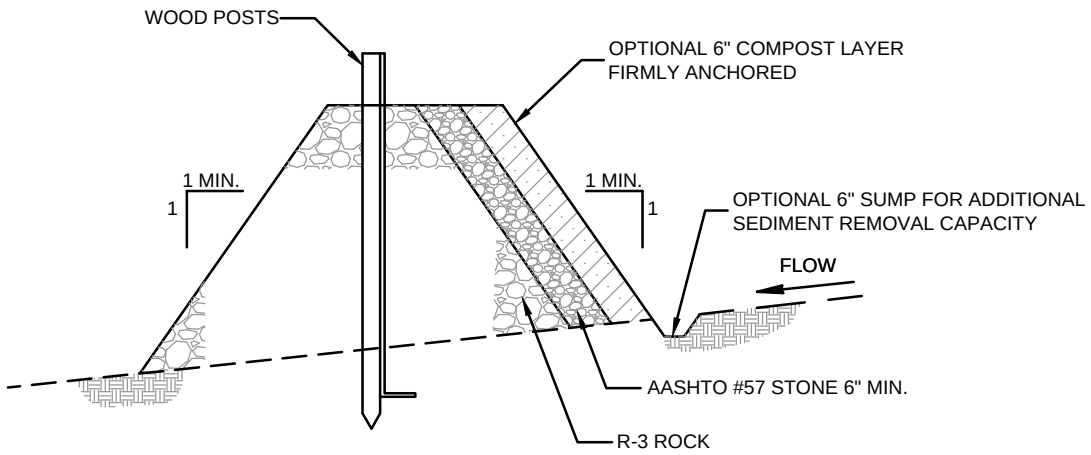

OUTLET CROSS-SECTION

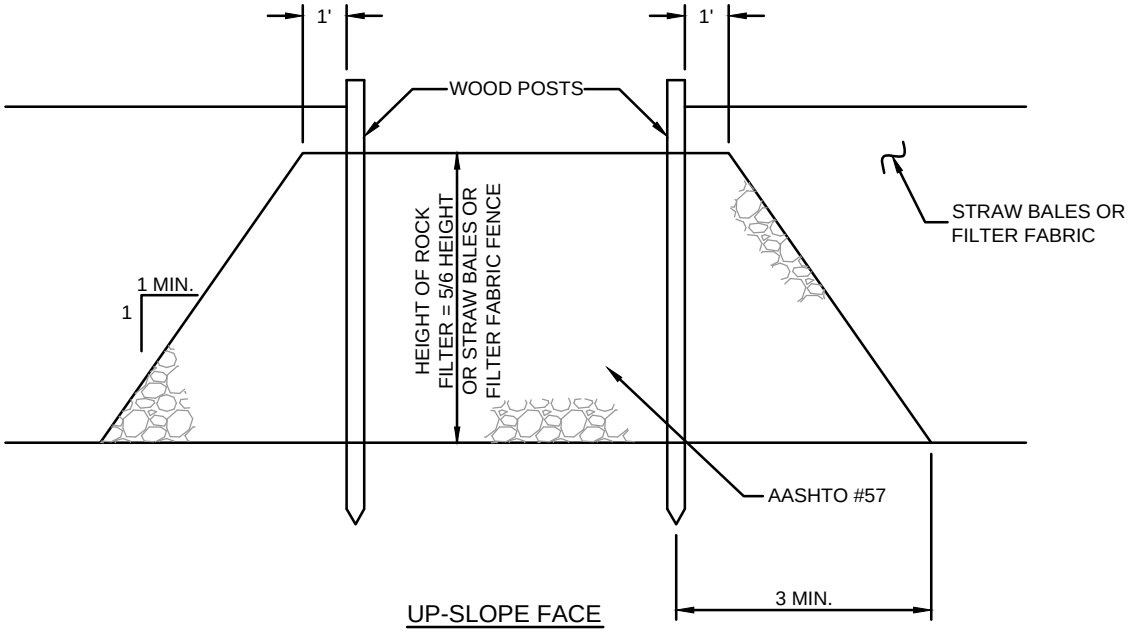

UP-SLOPE FACE

NOTES:

1. A ROCK FILTER OUTLET SHALL BE INSTALLED WHERE FAILURE OF A STRAW BALE BARRIER OR FILTER FABRIC FENCE HAS OCCURRED DUE TO CONCENTRATED FLOW. ANCHORED COMPOST LAYER SHALL BE USED ON UP SLOPE FACE IN "HQ AND EV WATERSHEDS."

2. INSPECT WEEKLY AND AFTER EACH RUNOFF EVENT. SEDIMENT MUST BE REMOVED WHEN ACCUMULATIONS REACH 1/3 THE HEIGHT OF THE OUTLET.

Know what's below. Call before you dig.

REV	REV	REVISION DESCRIPTION	BY	CKD	APP
D	09/18/2015	FERC FINAL	HMM	HMM	HMM
C	04/13/15	FERC DRAFT FILING	MLS	MWC	JMH
B	12/16/14	PRELIMINARY ISSUE	RJC	JAM	JMH
A	11/04/14	ISSUED FOR DRAFT RESOURCE REPORT 1	JBB	JMA	JMH

PennEast PIPELINE

PREPARED BY: Hatch Mott MacDonald

PENNEAST PIPELINE PROJECT

ROCK FILTER OUTLET

FIGURE 11

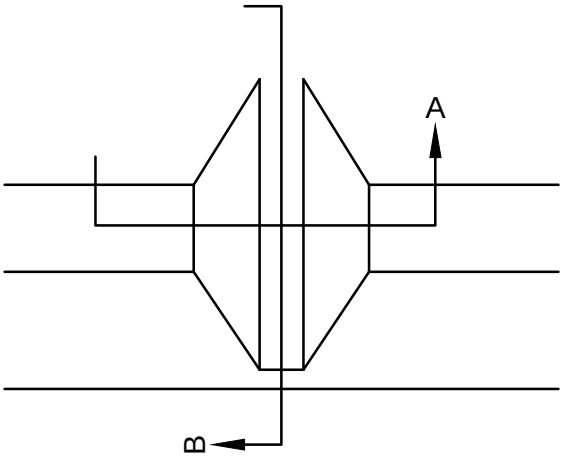

PLAN

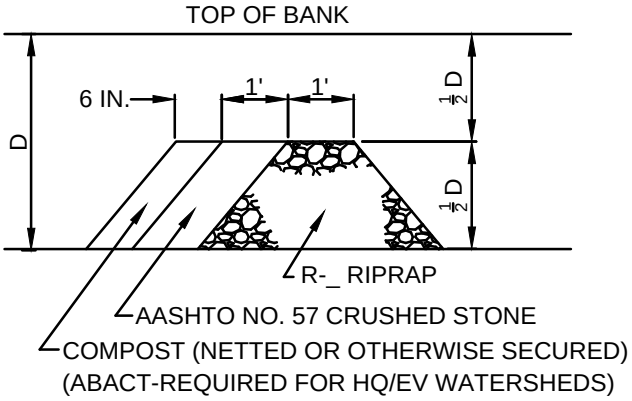

SECTION A-A

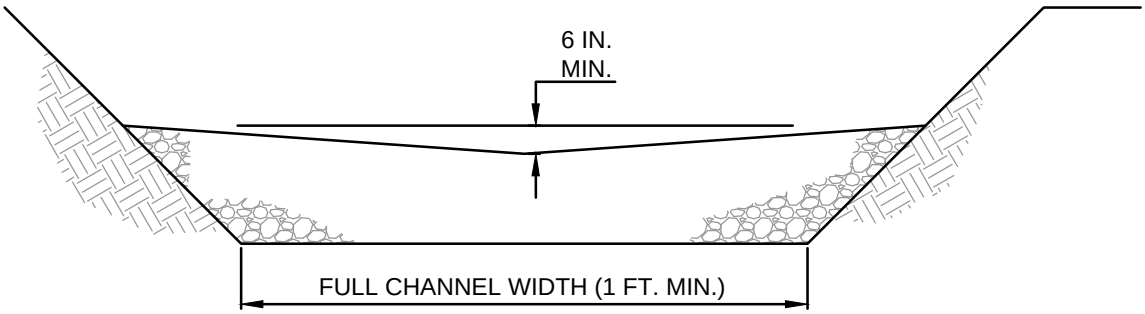

SECTION B-B

FOR D ≥ 3 FT. - USE R-4
FOR D ≥ 2 FT. TO D < 3 FT. - USE R-3
NOT APPLICABLE FOR D < 2 FT.

NOTES:

SEDIMENT MUST BE REMOVED WHEN ACCUMULATIONS REACH 1/2 THE HEIGHT OF THE FILTERS.

IMMEDIATELY UPON STABILIZATION OF EACH CHANNEL, INSTALLER REMOVE ACCUMULATED SEDIMENT, REMOVE ROCK FILTER, AND STABILIZE DISTURBED AREAS.

Know what's below. Call before you dig.

REV	REV	REVISION DESCRIPTION	BY	CKD	APP
D	09/18/15	FERC FINAL	HMM	HMM	HMM
C	04/13/15	FERC DRAFT FILING	MLS	MWC	JMH
B	12/16/14	PRELIMINARY ISSUE	RJC	JAM	JMH
A	11/04/14	ISSUED FOR DRAFT RESOURCE REPORT 1	JBB	JMA	JMH

PennEast PIPELINE

PREPARED BY: Hatch Mott MacDonald

PENNEAST PIPELINE PROJECT

ROCK FILTER

FIGURE 12

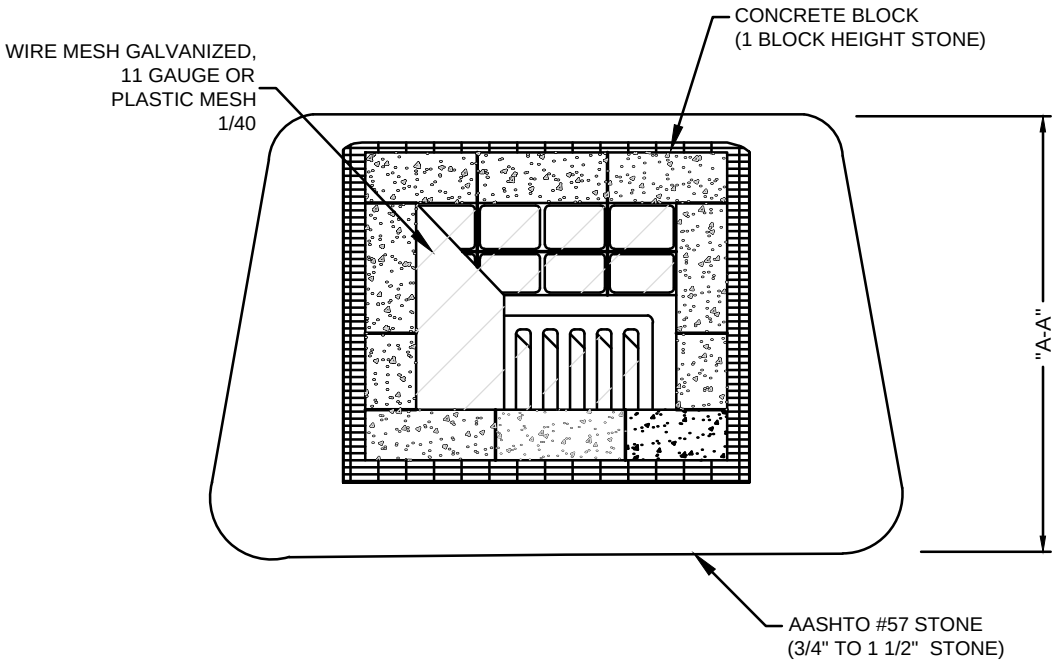

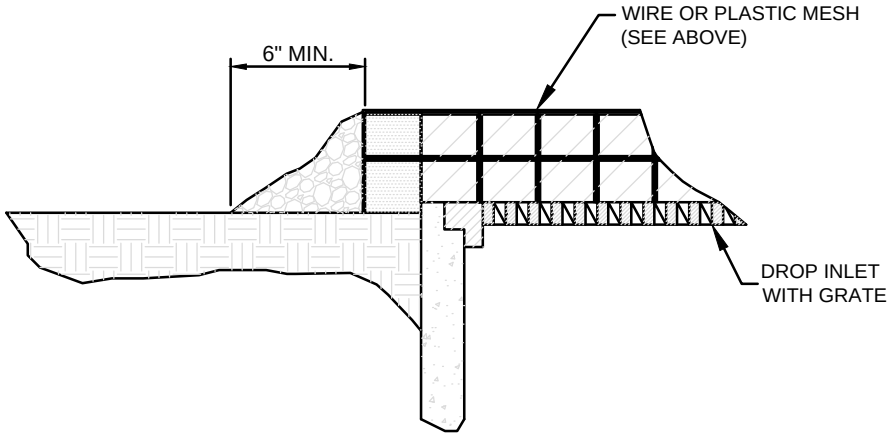

DETAIL "A-A"

NOTES:

1. MAXIMUM DRAINAGE AREA = 1 ACRE

2. INSPECT WEEKLY AND AFTER EACH STORMWATER EVENT. SEDIMENT SHALL BE REMOVED WHEN IT REACHES 1/2 THE HEIGHT OF THE STONE. DAMAGED OR CLOGGED INSTALLATIONS SHALL BE REPAIRED OR REPLACED IMMEDIATELY.

REV	REV	REVISION DESCRIPTION	BY	CKD	APP
D	09/18/15	FERC FINAL	HMM	HMM	HMM
C	04/13/15	FERC DRAFT FILING	MLS	MWC	JMH
B	12/16/14	PRELIMINARY ISSUE	RJC	JAM	JMH
A	11/04/14	ISSUED FOR DRAFT RESOURCE REPORT 1	JBB	JMA	JMH

PennEast PIPELINE

PREPARED BY: Hatch Mott MacDonald

PENNEAST PIPELINE PROJECT

STONE & CONCRETE BLOCK INLET PROTECTION

FIGURE 13

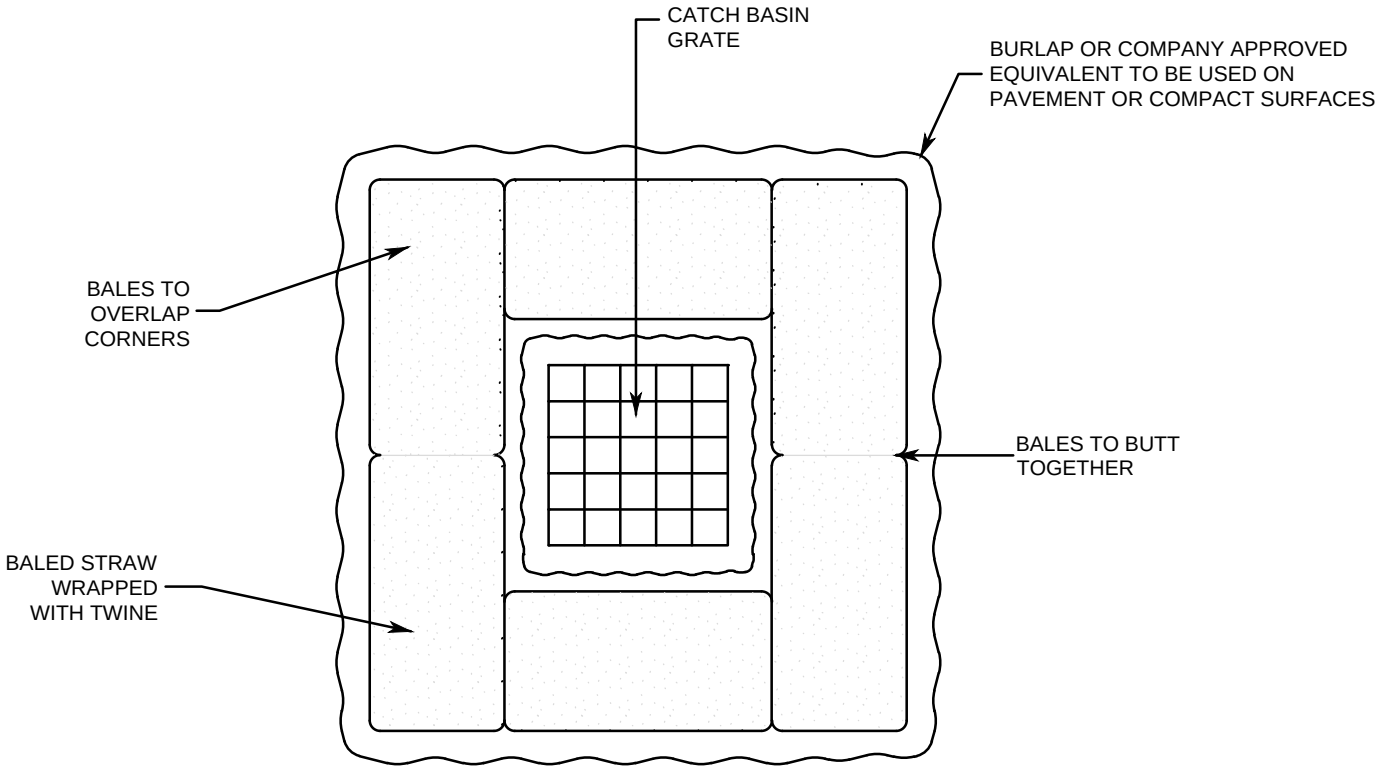

NOTES:

1. SURROUND STREET DRAINAGE STRUCTURE INLET WITH BALES PRIOR TO CONSTRUCTION AND MAINTAIN UNTIL CONSTRUCTION IS COMPLETED.
2. FOR BALES PLACED ON PAVEMENT (OR COMPACT SURFACES), PLACE BURLAP OR COMPANY APPROVED EQUIVALENT BETWEEN PAVEMENT AND BALE.
3. REMOVE ACCUMULATED SEDIMENT.

Know what's below. Call before you dig.

REV	REV	REVISION DESCRIPTION	BY	CKD	APP
D	09/18/15	FERC FINAL	HMM	HMM	HMM
C	04/13/15	FERC DRAFT FILING	MLS	MWC	JMH
B	12/16/14	PRELIMINARY ISSUE	RJC	JAM	JMH
A	11/04/14	ISSUED FOR DRAFT RESOURCE REPORT 1	JBB	JMA	JMH

PennEast PIPELINE

PREPARED BY: Hatch Mott MacDonald

PENNEAST PIPELINE PROJECT

STRAW BALE BARRIER INLET PROTECTION

FIGURE 14

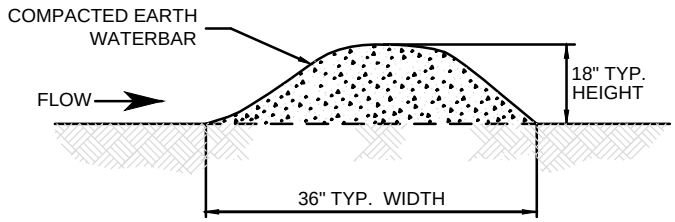

CROSS SECTION

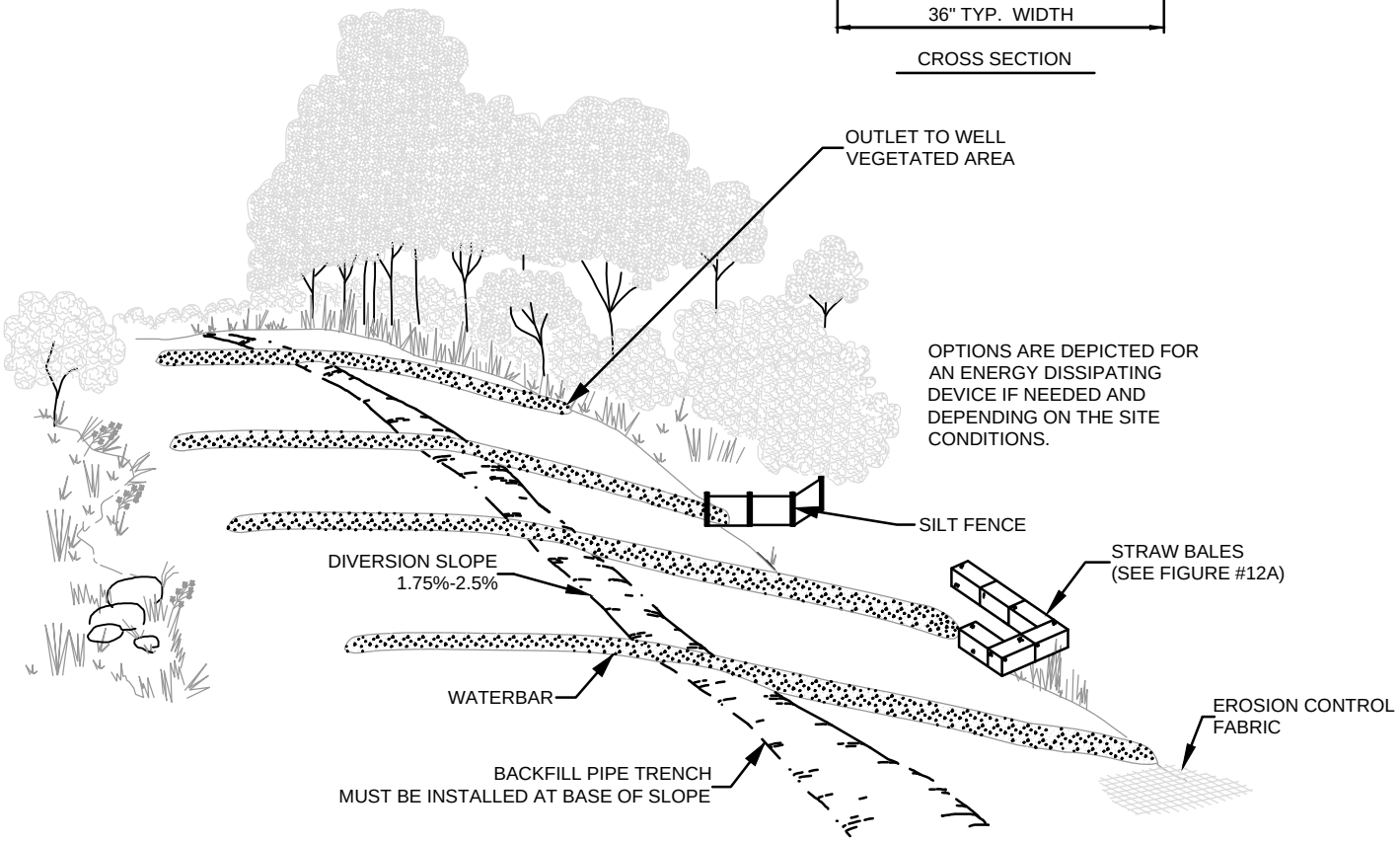

INSTALLATION REQUIREMENTS:

- INSTALL PERMANENT WATERBARS IN ALL AREAS EXECPT RESIDENTIAL OR AGRICULTURAL AS NECESSARY TO AVOID EXCESSIVE EROSION
- (UNLESS AUTHORIZED BY LANDOWNER OR LAND MANAGING AGENCY IN AGRICULTURAL OR RESIDENTIAL AREA).

MAXIMUM SPACING FOR PERMANENT INTERCEPTOR DIKES	
SLOPE (%)	SPACING (FT.)
<5	250
5 - 15	150
15 - 30	100
>30	50

- CONSTRUCT ENERGY DISSIPATING DEVICE USING COMPACTED EARTH AND ROCK.
- INSTALL A PROTECTIVE LINER, WHEREVER ERODIBLE SOILS ARE PRESENT, OR WHERE THERE IS NOT SUFFICIENT VEGETATIVE GROWTH.
- INSTALL WITH A 1.75%-2.5% OUTFALL ANGLE.
- POSITION OUTFALL TO PREVENT SEDIMENT DISCHARGE INTO WETLANDS, WATERBODIES, OR OTHER SENSITIVE RESOURCES.
- ON SLOPES GREATER THAN 30 PERCENT, INSTALL WATERBARS WITH EROSION CONTROL BLANKET ON THE SWALE SIDE.
- FILTER RUN-OFF WATER BY CONSTRUCTING THE OUTLET IN A WELL VEGETATED STABLE AREA, OR BY USING AN ENERGY DISSIPATING DEVICE (SILT FENCE, STRAW BALES, EROSION CONTROL FABRIC), AS DIRECTED BY THE ENVIRONMENTAL INSPECTOR.

MAINTENANCE REQUIREMENTS:

- INSPECT WATERBARS IS DURING AND FOLLOWING CONSTRUCTION AND MAKE REPAIRS AS NEEDED.
- KEEP THE CHANNEL FREE OF DEBRIS AND OBSTRUCTIONS.
- SEED AND MULCH PERMANENT WATERBARS FOLLOWING CONSTRUCTION.

Know what's below. Call before you dig.

REV	REV	REVISION DESCRIPTION	BY	CKD	APP
D	9/18/15	FERC FINAL	HMM	HMM	HMM
C	04/13/15	FERC DRAFT FILING	MLS	MWC	JMH
B	12/16/14	PRELIMINARY ISSUE	RJC	JAM	JMH
A	11/04/14	ISSUED FOR DRAFT RESOURCE REPORT 1	JBB	JMA	JMH

PennEast PIPELINE

PREPARED BY: Hatch Mott MacDonald

PENNEAST PIPELINE PROJECT

PERMANENT WATERBAR INSTALLATION AND MAINTENANCE

FIGURE 15

TEMPORARY	
SLOPE (%)	SPACING (FT.)
<5	NO STRUCTURE
5 - 15	300
15 - 30	200
>30	100

PERMANENT	
SLOPE (%)	SPACING (FT.)
<5	1000
>5 - 15	500
>15 - 25	300
>25-35	200
>35-100	100
>100	50

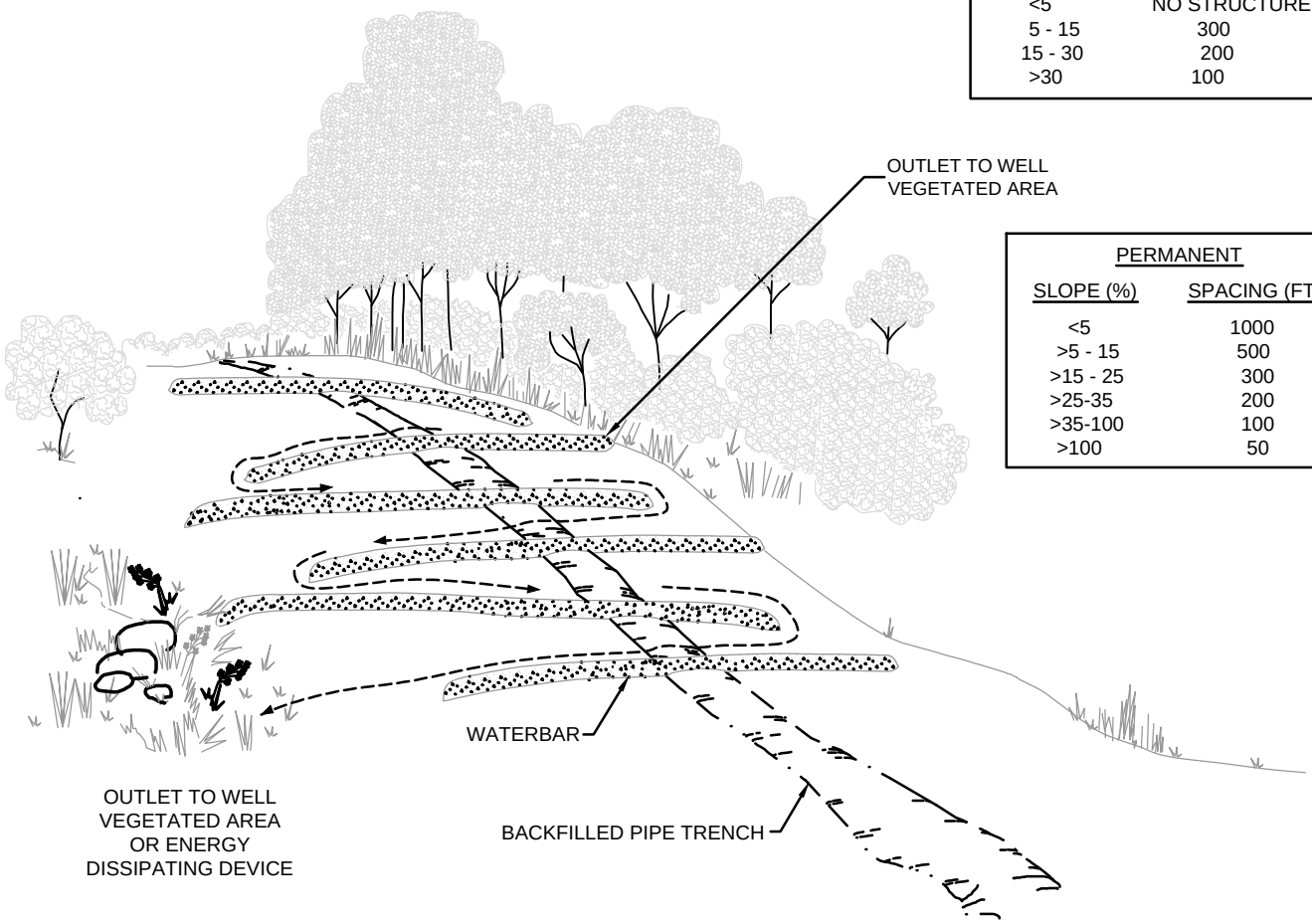

INSTALLATION REQUIREMENTS:

1. INSTALL IN ALL AREAS EXCEPT RESIDENTIAL OR AGRICULTURAL(UNLESS AUTHORIZED BY LANDOWNER OR LAND MANAGING AGENCY).
2. CONSTRUCT USING EARTH FILLED SACKS OR STAKED STRAW BALES FOR TEMPORARY OR COMPACTED EARTH AND ROCK FOR PERMANENT.
3. INSTALL WITH A 2-8% OUTFALL ANGLE.
4. FOR TEMPORARY CHEVRON INTERCEPTOR DIKES, POSITION OUTFALL TO PREVENT SEDIMENT DISCHARGE INTO WETLANDS, WATERBODIES, OR OTHER SENSITIVE RESOURCES.
5. FILTER RUN-OFF WATER BY CONSTRUCTING AN OUTLET USING AN ENERGY DISSIPATING DEVICE (SILT FENCE, STRAW BALES, EROSION CONTROL FABRIC), AS DIRECTED BY THE ENVIRONMENTAL INSPECTOR.

NOTE:
CHEVRON INTERCEPTOR DIKES TO BE UTILIZED ONLY IN TOPOGRAPHY WHERE WATER WILL NOT FLOW OFF THE RIGHT-OF-WAY.

MAINTENANCE REQUIREMENTS:

1. INSPECT DURING AND FOLLOWING CONSTRUCTION, AND MAKE REPAIRS AS NEEDED.
2. KEEP THE CHANNEL FREE OF DEBRIS AND OBSTRUCTIONS.
3. SEED AND MULCH PERMANENT INTERCEPTOR DIKES FOLLOWING CONSTRUCTION.

Know what's below. Call before you dig.

REV	REV	REVISION DESCRIPTION	BY	CKD	APP
D	09/18/15	FERC FINAL	HMM	HMM	HMM
C	04/13/15	FERC DRAFT FILING	MLS	MWC	JMH
B	12/16/14	PRELIMINARY ISSUE	RJC	JAM	JMH
A	11/04/14	ISSUED FOR DRAFT RESOURCE REPORT 1	JBB	JMA	JMH

PennEast PIPELINE

PREPARED BY: Hatch Mott MacDonald

PENNEAST PIPELINE PROJECT

CHEVRON WATERBAR INSTALLATION AND MAINTENANCE

FIGURE 16

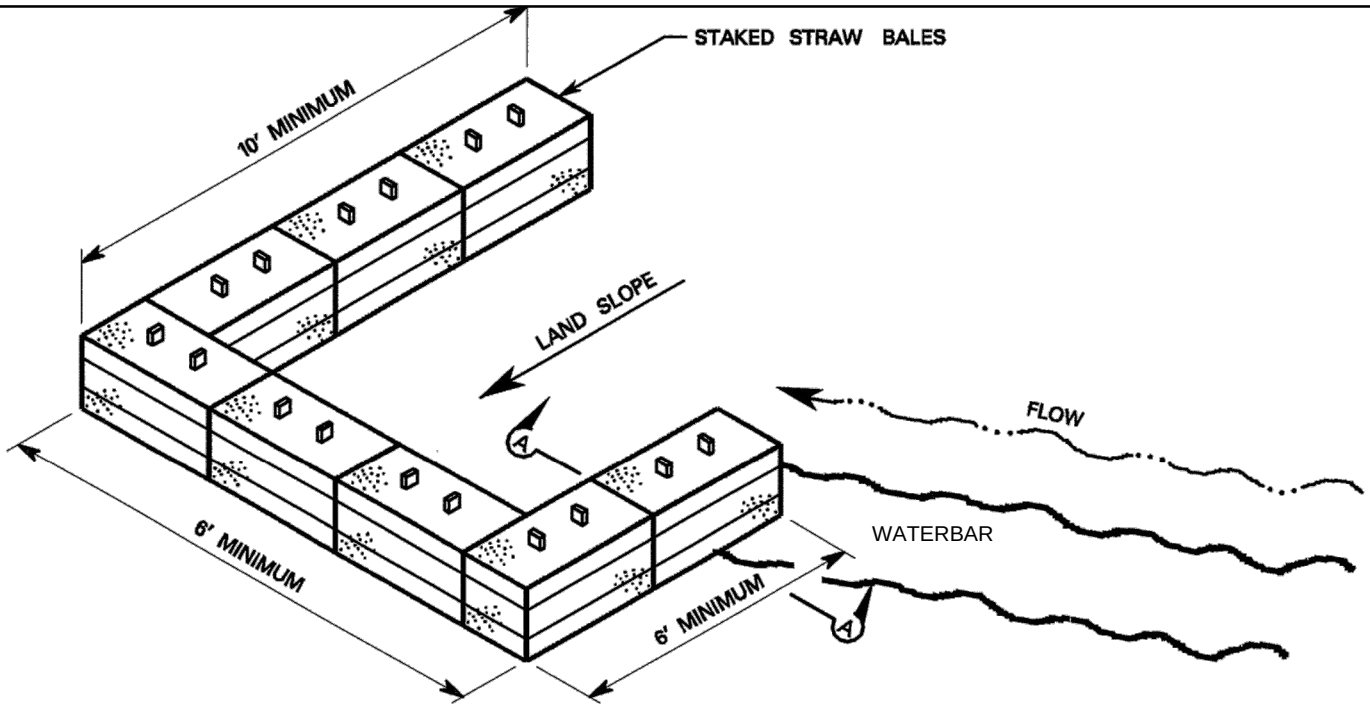

PLAN VIEW

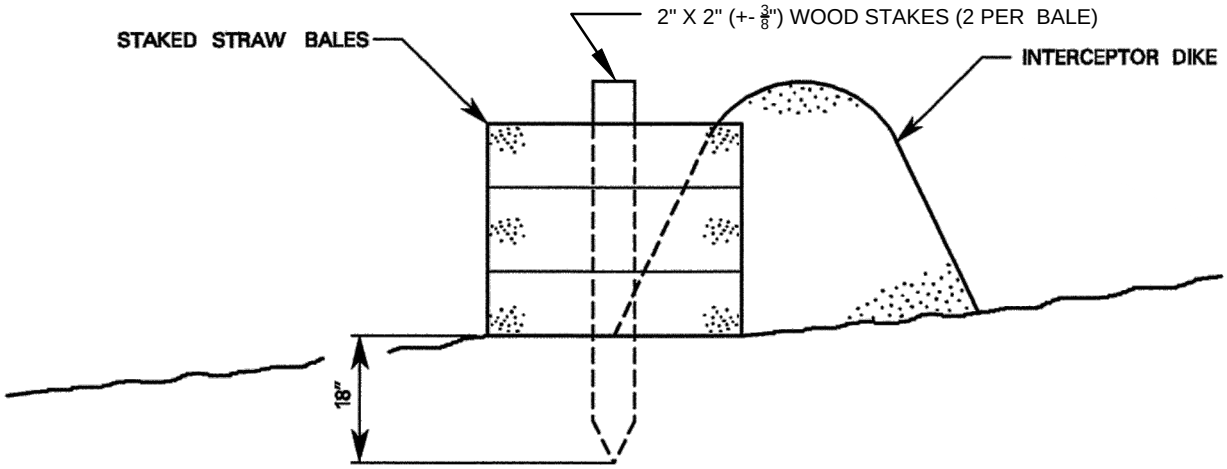

SECTION "A–A"
CROSS SECTION VIEW

INSTALLATION REQUIREMENTS:

- WHEN USING STRAW BALES PLACE THEM WITH THEIR ENDS TIGHTLY ABUTTING.
- PLACE WITH BALING STRINGS / WIRE ON THE SIDE (NOT IN CONTACT WITH THE GROUND).

STANDARD 18" FILER FABRIC FENCE MAY BE SUBSTITUTED FOR STRAW BALES

MAINTENANCE REQUIREMENTS:

- REMOVE ACCUMULATED SEDIMENTS TO AN UPLAND AREA WHEN SEDIMENT REACHES 1/3 THE HEIGHT OF STRAW BALES OR 1/2 THE HEIGHT OF SILT FENCE.

Know what's below. Call before you dig.

REV	REV	REVISION DESCRIPTION	BY	CKD	APP
D	9/18/15	FERC FINAL	HMM	HMM	HMM
C	04/13/15	FERC DRAFT FILING	MLS	MWC	JMH
B	12/16/14	PRELIMINARY ISSUE	RJC	JAM	JMH
A	11/04/14	ISSUED FOR DRAFT RESOURCE REPORT 1	JBB	JMA	JMH

PennEast PIPELINE

PREPARED BY: Hatch Mott MacDonald

PENNEAST PIPELINE PROJECT

J-HOOK SEDIMENT BARRIER AT OUTLET OF WATERBAR

FIGURE 17

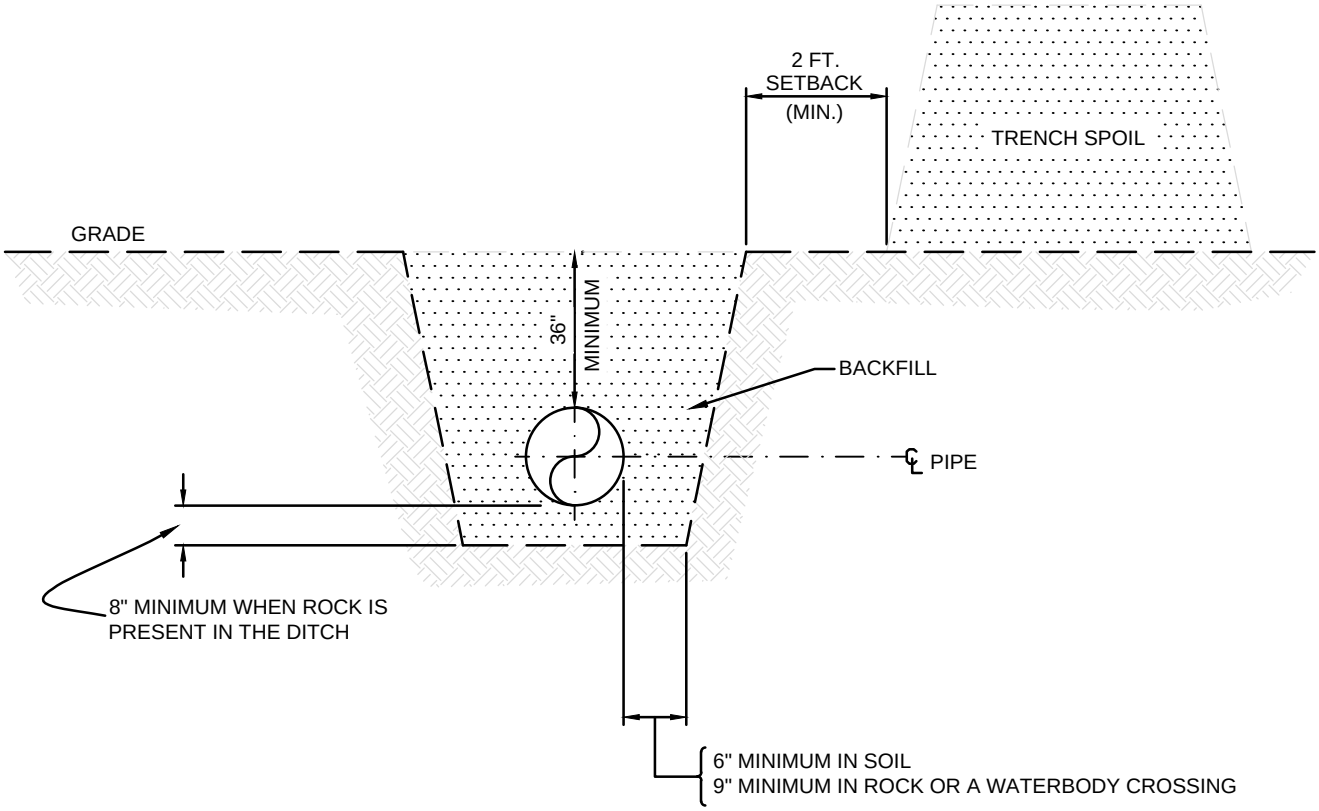

CROSS-SECTION VIEW OF TYPICAL TRENCH

NOTES:

1. ALL ORIGINAL CONTOURS WILL BE RE-ESTABLISHED UPON COMPLETION OF PIPE INSTALLATION. EXCEPT IN WETLANDS, A CROWN MAY BE LEFT TO ACCOUNT FOR DITCH SETTLING, AS DIRECTED BY THE ENVIRONMENTAL INSPECTOR.

2. IN COLD WATER FISHERY STREAMS, THE TOP 12" OF THE TRENCH WILL BE BACKFILLED WITH CLEAN GRAVEL OR NATIVE COBBLES.

811 Know what's below. Call before you dig.

REV	REV	REVISION DESCRIPTION	BY	CKD	APP
D	09/18/15	FERC FINAL	HMM	HMM	HMM
C	04/13/15	FERC DRAFT FILING	MLS	MWC	JMH
B	12/16/14	PRELIMINARY ISSUE	RJC	JAM	JMH
A	11/04/14	ISSUED FOR DRAFT RESOURCE REPORT 1	JBB	JMA	JMH

PennEast PIPELINE

PREPARED BY: Hatch Mott MacDonald

PENNEAST PIPELINE PROJECT

TYPICAL TRENCH DETAIL

FIGURE 18

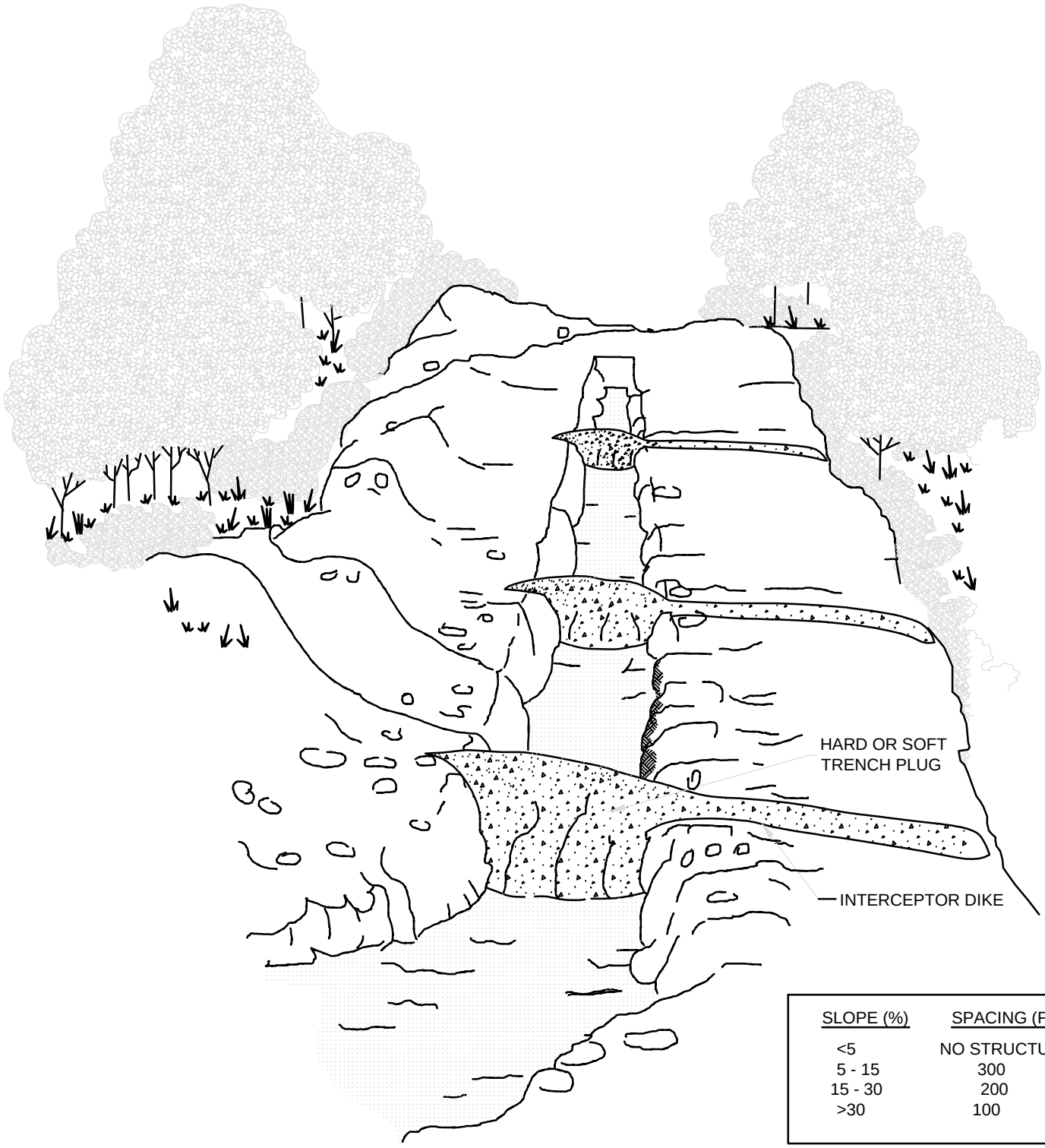

SLOPE (%)	SPACING (FT.)
<5	NO STRUCTURE
5 - 15	300
15 - 30	200
>30	100

NOTES:

1. TEMPORARY TRENCH PLUGS WILL BE USED IN CONJUNCTION WITH TEMPORARY INTERCEPTOR DIKES TO PREVENT WATER FROM OVERFLOWING INTO SENSITIVE RESOURCE AREAS.

2. DIVERT TRENCH OVERFLOW TO A WELL-VEGETATED OFF-R.O.W. LOCATION OR INSTALL APPROPRIATE ENERGY DISSIPATING DEVICE/SEDIMENT REMOVAL BMP (SILT FENCE, STRAW BALES, EROSION CONTROL FABRIC).

3. USE TEMPORARY TRENCH PLUGS AT ALL WATERBODY CROSSINGS.

Know what's below. Call before you dig.

REV	REV	REVISION DESCRIPTION	BY	CKD	APP

PennEast PIPELINE

PREPARED BY: Hatch Mott MacDonald

PENNEAST PIPELINE PROJECT

TEMPORARY WATERBARS AND TEMPORARY TRENCH PLUGS

FIGURE 19

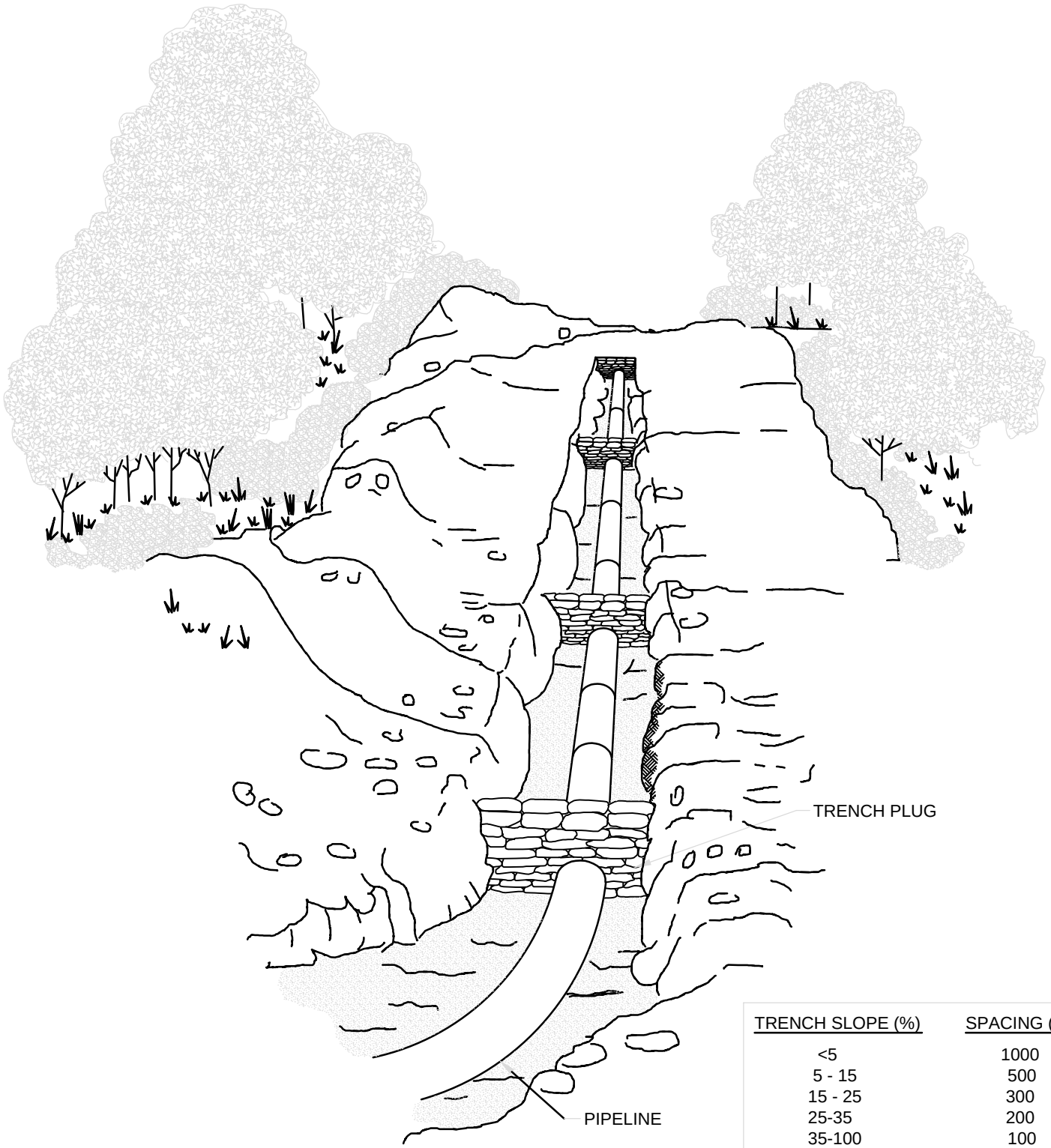

TRENCH SLOPE (%)	SPACING (FT.)
<5	1000
5 - 15	500
15 - 25	300
25-35	200
35-100	100
>100	50

NOTE:

1. PLUG MATERIAL SHALL CONSIST OF CLAY, BENTONITE, OR CONCRETE FILLED SACKS, EXCEPT WHERE TRENCH SLOPE IS GREATER THAN 100%, CEMENT FILLED BAGS SHALL BE USED.

2. TOPSOIL SHALL NOT BE USED TO FILL SACKS.

3. PERMANENT IMPERVIOUS TRENCH PLUGS ARE REQUIRED FOR ALL WATERBODY AND WETLAND CROSSINGS, AS WELL AS UP SLOPE FROM ROADWAY AND RAILROAD CUT SLOPES.

Know what's below. Call before you dig.

REV	REV	REVISION DESCRIPTION	BY	CKD	APP
D	09/18/15	FERC FINAL	HMM	HMM	HMM
C	04/13/15	FERC DRAFT FILING	MLS	MWC	JMH
B	12/16/14	PRELIMINARY ISSUE	RJC	JAM	JMH
A	11/04/14	ISSUED FOR DRAFT RESOURCE REPORT 1	JBB	JMA	JMH

PennEast PIPELINE

PREPARED BY: Hatch Mott MacDonald

PENNEAST PIPELINE PROJECT

PERMANENT TRENCH PLUGS FOLLOWING PIPELINE INSTALLATION

FIGURE 20

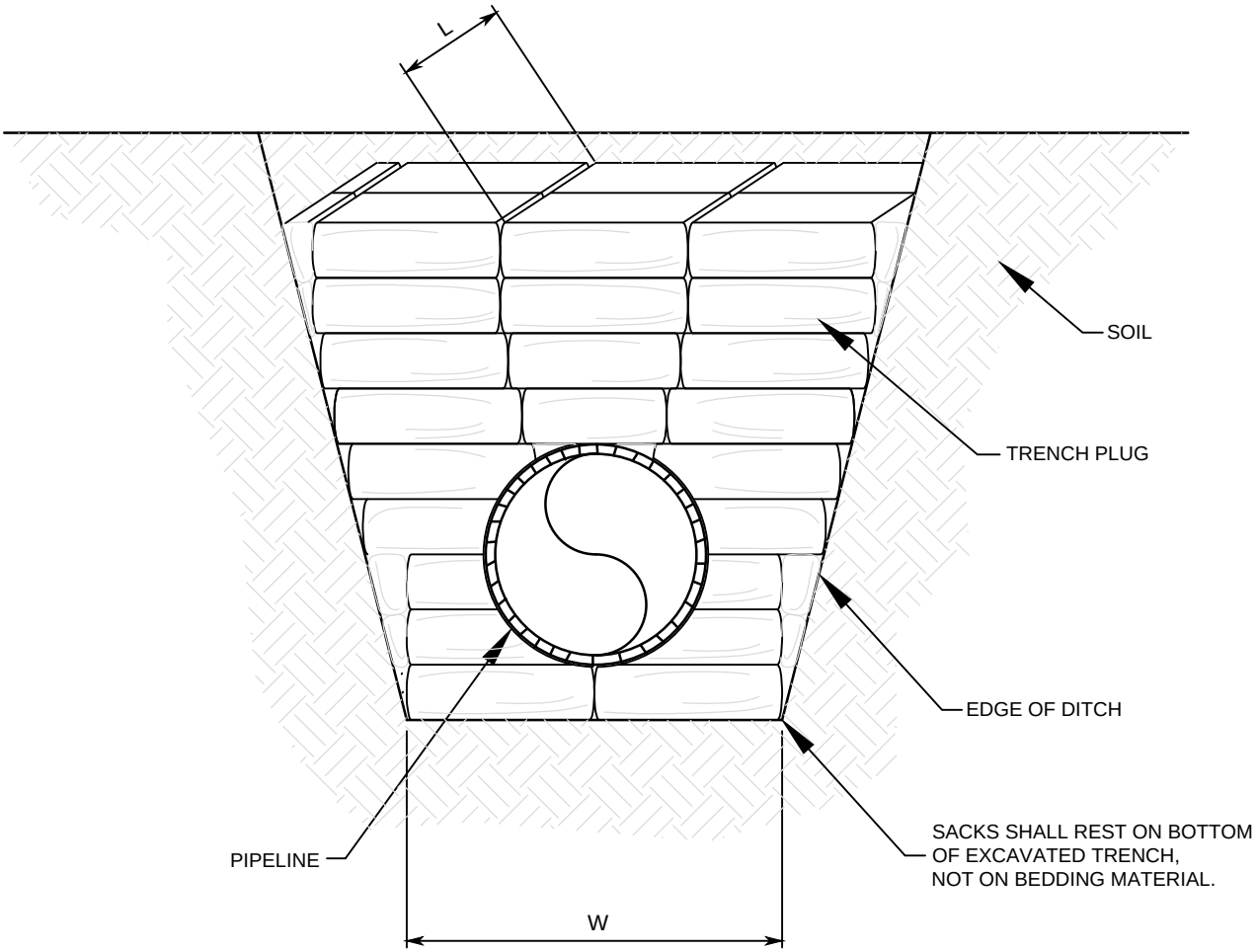

D = PIPE DIAMETER
D1 = APPROXIMATELY 24"
D2 = APPROXIMATELY 6" (8" MIN. IN ROCK)
D3 = APPROXIMATELY 12"
W = D + 2 to 4 FEET
L = 24" MINIMUM
D1 + D3 = 36" MINIMUM

Know what's below. Call before you dig.

REV	REV	REVISION DESCRIPTION	BY	CKD	APP
D	09/18/15	FERC FINAL	HMM	HMM	HMM
C	04/13/15	FERC DRAFT FILING	MLS	MWC	JMH
B	12/16/14	PRELIMINARY ISSUE	RJC	JAM	JMH
A	11/04/14	ISSUED FOR DRAFT RESOURCE REPORT 1	JBB	JMA	JMH

PennEast PIPELINE

PREPARED BY: Hatch Mott MacDonald

PENNEAST PIPELINE PROJECT

TRENCH PLUG DETAIL

FIGURE 21

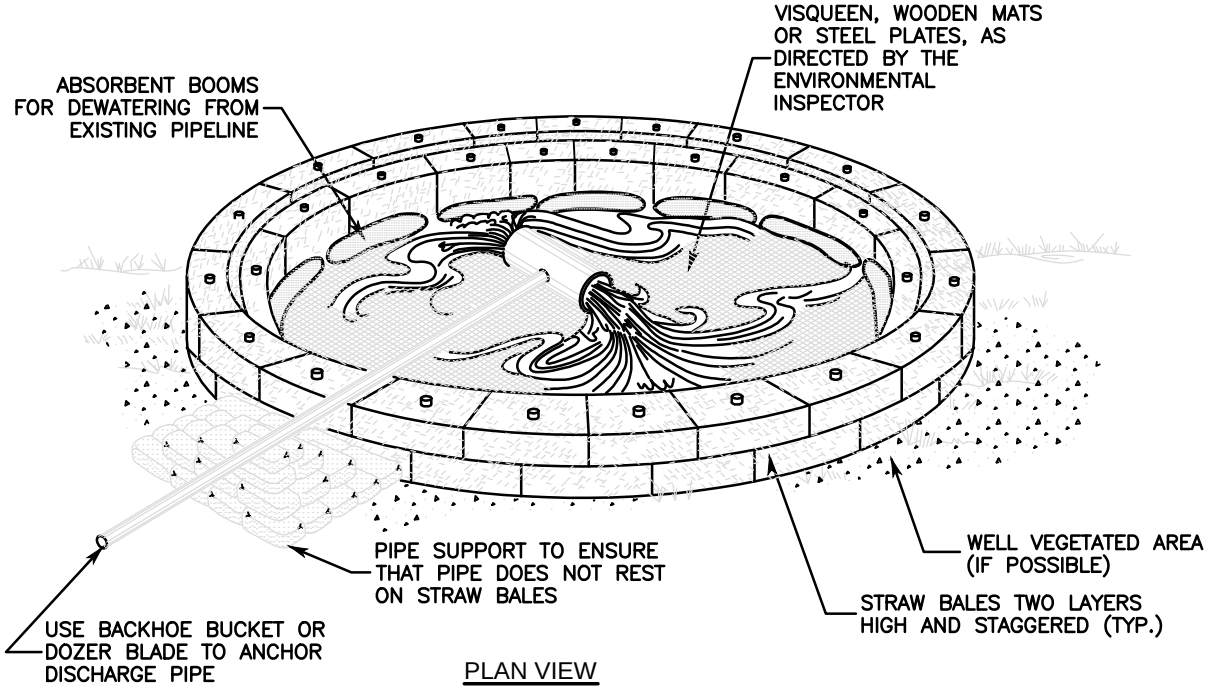

PLAN VIEW

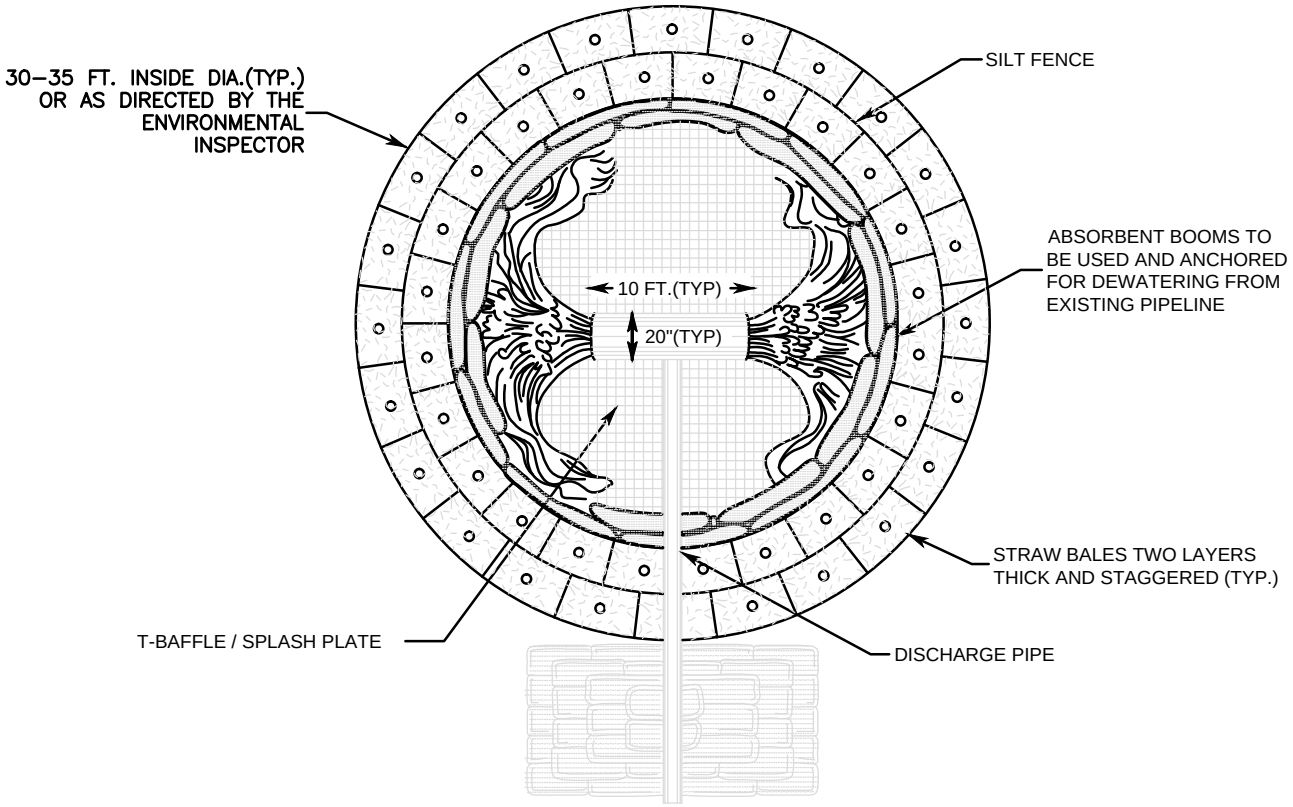

TOP VIEW

REV	REV	REVISION DESCRIPTION	BY	CKD	APP
D	09/18/15	FERC FINAL	HMM	HMM	HMM
C	04/13/15	FERC DRAFT FILING	MLS	MWC	JMH
B	12/16/14	PRELIMINARY ISSUE	RJC	JAM	JMH
A	11/04/14	ISSUED FOR DRAFT RESOURCE REPORT 1	JBB	JMA	JMH

PennEast PIPELINE

PREPARED BY: Hatch Mott MacDonald

PENNEAST PIPELINE PROJECT

TYPICAL DEWATERING STRUCTURE

FIGURE 22

Know what's below. Call before you dig.

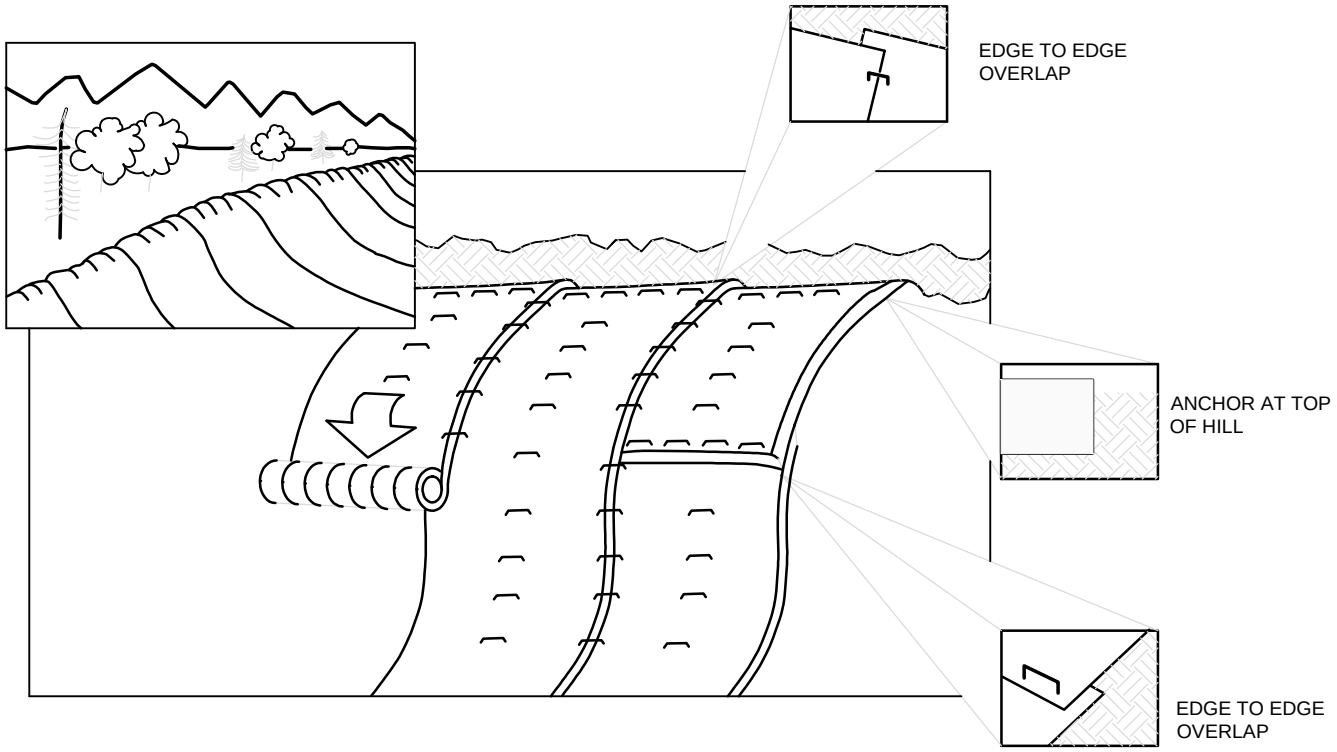

NOTES:

1. EROSION CONTROL MATTING (BLANKETS) SHALL BE USED ON SLOPES 3:1 OR STEEPER, SEEDED AREAS WITHIN 50 FEET OF ANY SURFACE WATER, SEEDED AREAS WITHIN 100 FEET OF ANY SPECIAL PROTECTION WATER (HQ/EV), AND OTHER LOCATIONS IDENTIFIED IN THE PLAN.

2. EROSION CONTROL MATTING SHALL MEET THE REQUIREMENTS SPECIFIED IN THE PLAN AND/OR AS DIRECTED BY THE ENVIRONMENTAL INSPECTOR.

3. STAPLES SHALL BE MADE OF 11 GAUGE WIRE, U-SHAPED WITH 6" LEGS AND A 1" CROWN. STAPLES SHALL BE DRIVEN INTO THE GROUND FOR THE FULL LENGTH OF THE STAPLE LEGS.

4. MATTING SHALL BE INSTALLED ACCORDING TO MANUFACTURER SPECIFICATIONS OR AS STATED BELOW:

   - EXTEND TOP OF BLANKET 3 FEET PAST THE UPPER EDGE OF THE SLOPE.
   - ANCHOR ("KEY") THE UPPER EDGE OF THE BLANKET INTO THE SLOPE USING A 6" DEEP TRENCH AND ROLL THE BLANKET DOWN THE HILL. DOUBLE STAPLE EVERY 12" BEFORE BACKFILLING AND COMPACTING TRENCH.
   - AVOID STRETCHING EROSION CONTROL MATTING (LOOSELY) DURING INSTALLATION.
   - BRING MAT ROLL BACK OVER THE TOP OF THE TRENCH AND CONTINUE TO ROLL DOWN SLOPE. STAPLE EVERY 12" WHERE MAT EXITS THE TRENCH AT THE TOP OF THE SLOPE.
   - WHEN BLANKETS ARE SPLICED DOWN-SLOPE TO ADJOINING MATS (SLOPE OR STREAM BANK MATS), THE UPPER BLANKET SHALL BE PLACED OVER THE LOWER MAT (SHINGLE STYLE) WITH APPROXIMATELY 6" OF OVERLAP. STAPLE THROUGH THE OVERLAPPED AREA EVERY 12".
   - OVERLAP ADJACENT BLANKETS 6". STAPLE EDGES OF BLANKETS AND CENTER EVERY 36".

5. IN LIVESTOCK AREAS WHERE EROSION CONTROL MATTING IS APPLIED TO THE SLOPES, FENCING WILL BE USED IF NECESSARY TO EXCLUDE LIVESTOCK, WITH PERMISSION OF THE LANDOWNER.

6. BLANKETS SHOULD BE INSPECTED WEEKLY AND AFTER EACH STORMWATER EVENT UNTIL PERMANENT STABILIZATION HAS BEEN ACHIEVED. DAMAGED OR DISPLACED BLANKETS SHOULD BE RESTORED OR REPLACED AS NECESSARY.

Know what's below. Call before you dig.

REV	REV	REVISION DESCRIPTION	BY	CKD	APP
D	09/18/15	FERC FINAL	HMM	HMM	HMM
C	04/13/15	FERC DRAFT FILING	MLS	MWC	JMH
B	12/16/14	PRELIMINARY ISSUE	RJC	JAM	JMH
A	11/04/14	ISSUED FOR DRAFT RESOURCE REPORT 1	JBB	JMA	JMH

PennEast PIPELINE

PREPARED BY: Hatch Mott MacDonald

PENNEAST PIPELINE PROJECT

EROSION CONTROL BLANKETS

FIGURE 23

A. BURY THE TOP END OF THE JUTE STRIPS IN A 6" TRENCH (TYPICAL)

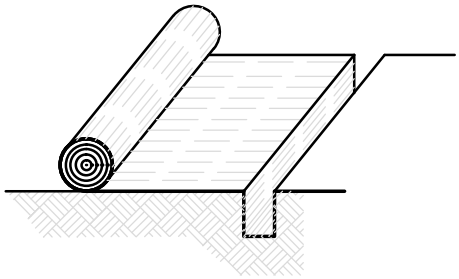

B. DOUBLE STAPLE EVERY 12" BEFORE BACKFILLING AND COMPACTING.

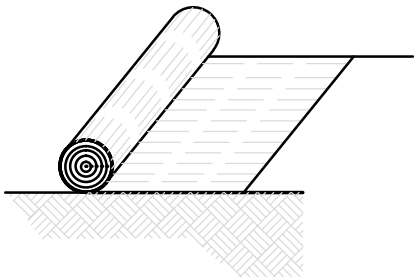

C. BURY AND TAMP UPPER END OF LOWER STRIP AS IN "A" AND "B". OVERLAP END OF TOP STRIP 4" AND STAPLE.

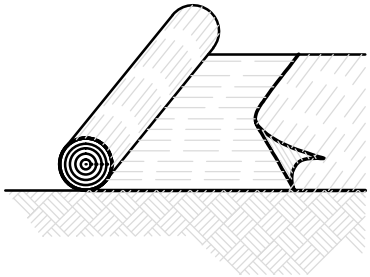

D. WHERE FABRIC STOPS, FOLD, BURY, AND TAMP JUTE STRIPS IN SLIT TRENCH. PROVIDE DOUBLE ROW OF STAPLES

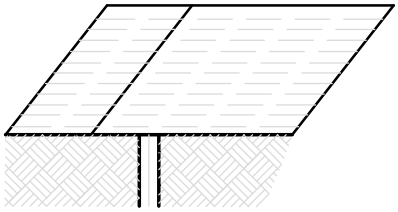

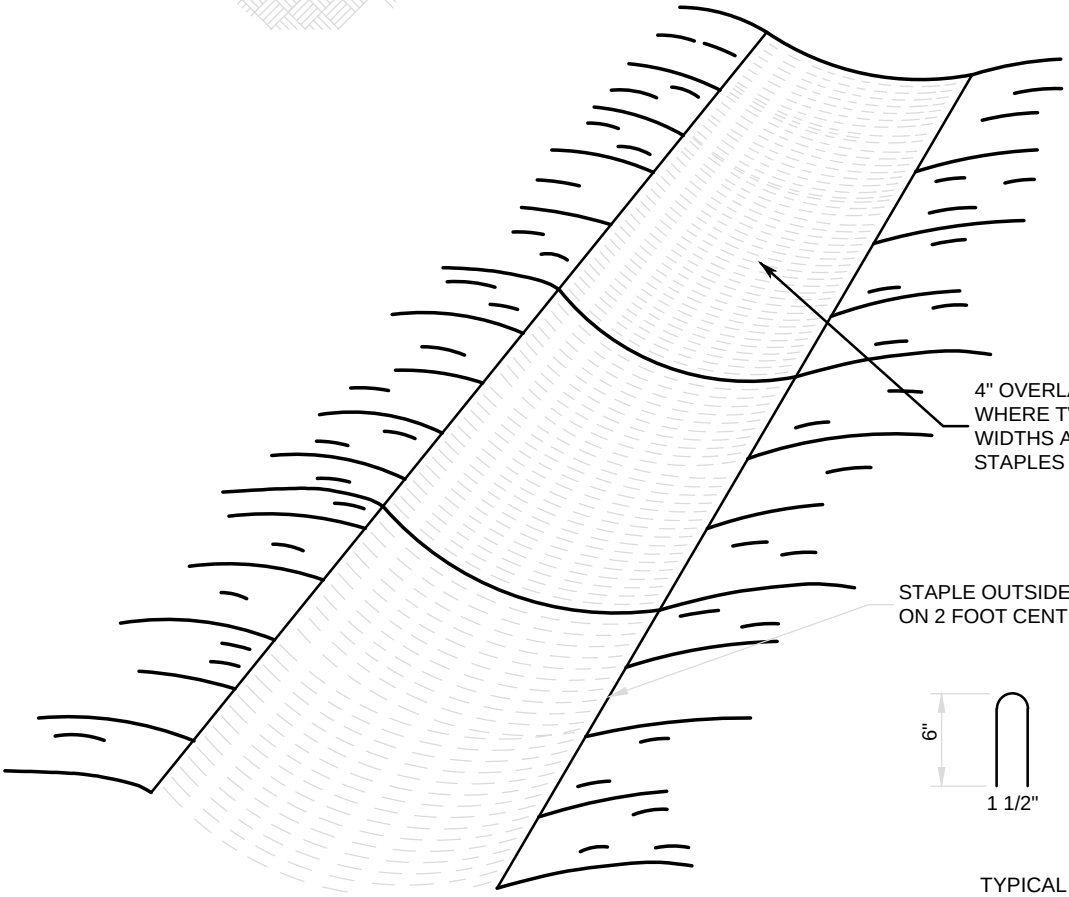

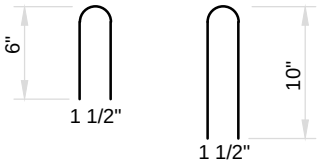

TYPICAL STAPLES
NO. 11 GAUGE WIRE

REV	REV	REVISION DESCRIPTION	BY	CKD	APP
D	09/18/15	FERC FINAL	HMM	HMM	HMM
C	04/13/15	FERC DRAFT FILING	MLS	MWC	JMH
B	12/16/14	PRELIMINARY ISSUE	RJC	JAM	JMH
A	11/04/14	ISSUED FOR DRAFT RESOURCE REPORT 1	JBB	JMA	JMH

PennEast PIPELINE

PREPARED BY: Hatch Mott MacDonald

PENNEAST PIPELINE PROJECT

EROSION CONTROL FABRIC INSTALLATION

FIGURE 24

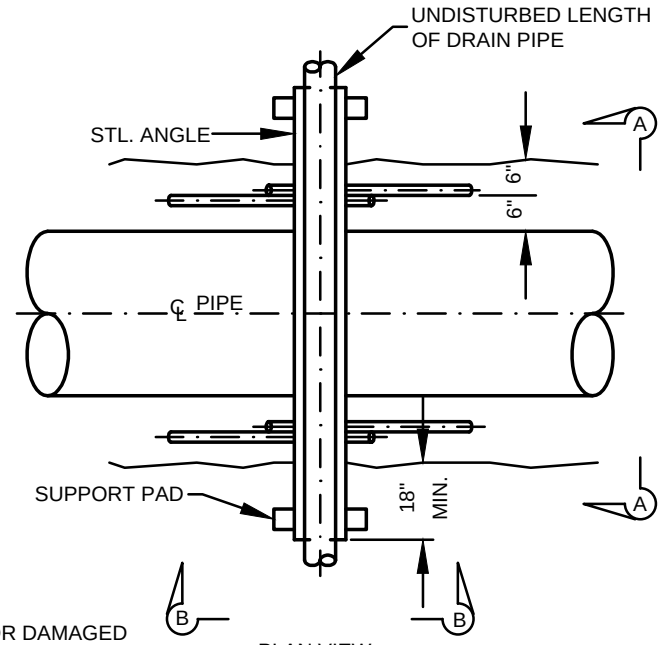

PLAN VIEW

N.T.S.

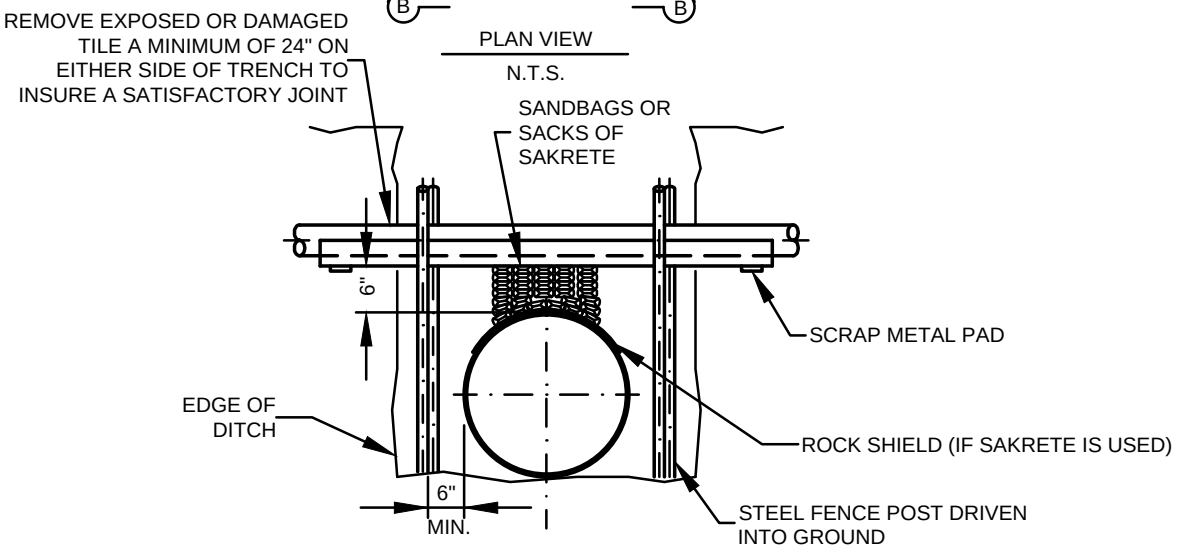

SECTION "A-A"

N.T.S.

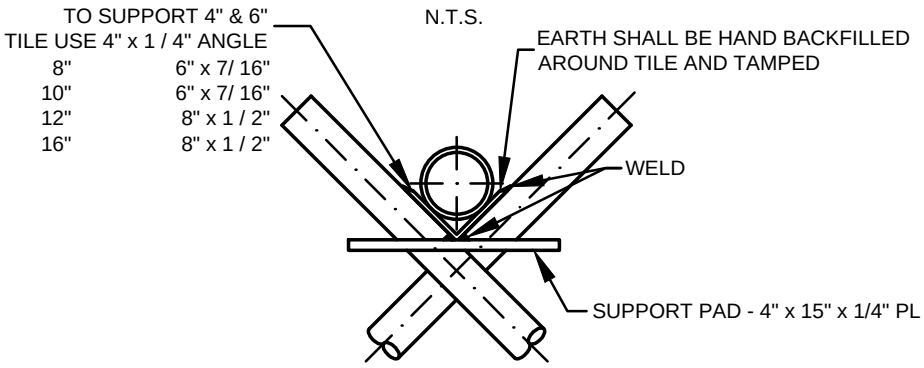

SECTION "B-B"

N.T.S.

NOTE:

1. USE OF SAKRETE SHALL REQUIRE PRIOR COMPANY APPROVAL.

REV	REV	REVISION DESCRIPTION	BY	CKD	APP
D	09/18/15	FERC FINAL	HMM	HMM	HMM
C	04/13/15	FERC DRAFT FILING	MLS	MWC	JMH
B	12/16/14	PRELIMINARY ISSUE	RJC	JAM	JMH
A	11/04/14	ISSUED FOR DRAFT RESOURCE REPORT 1	JBB	JMA	JMH

PennEast PIPELINE

PREPARED BY: Hatch Mott MacDonald

PENNEAST PIPELINE PROJECT

DRAIN TILE REPAIR PROCEDURE

FIGURE 25

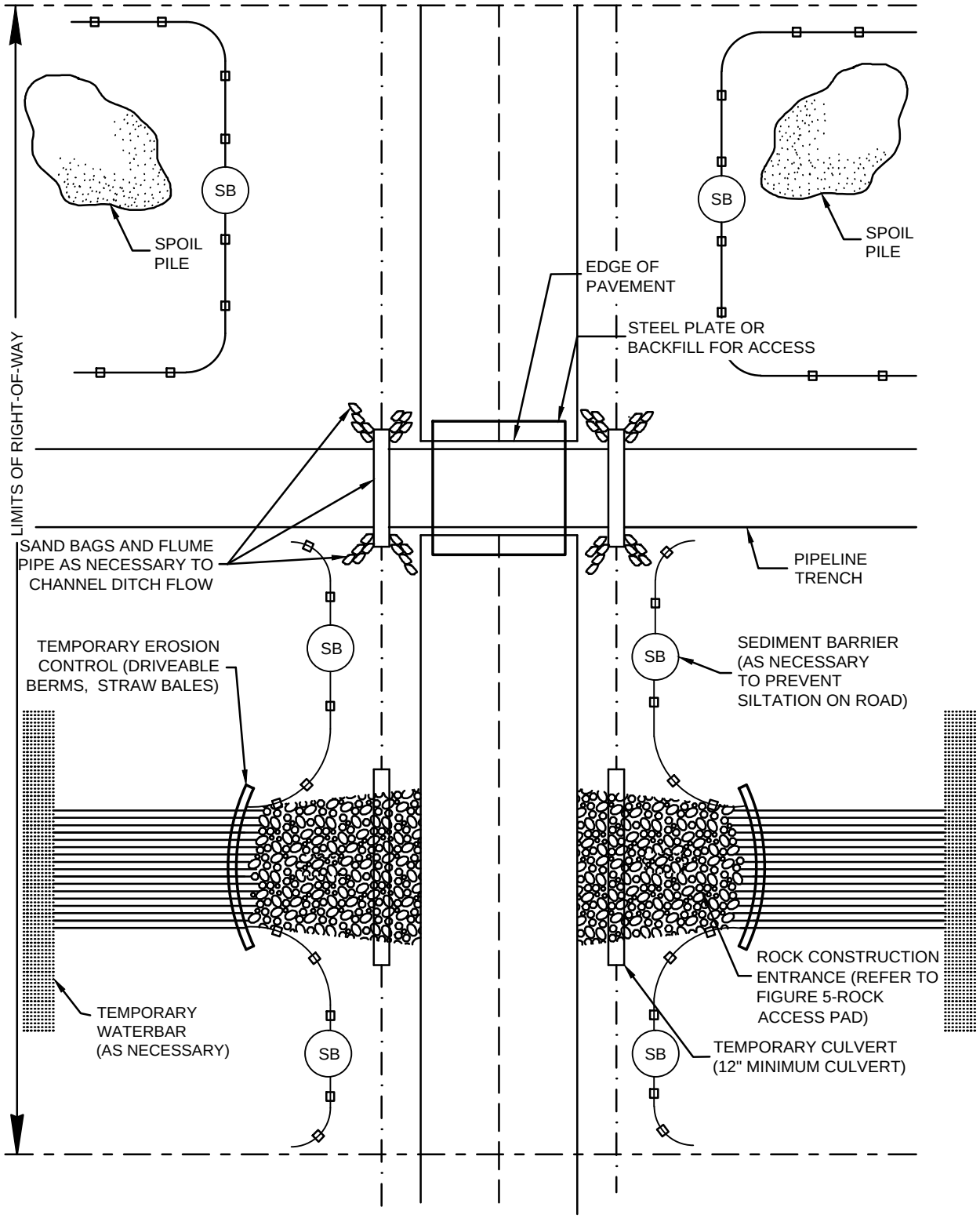

NOTES:

1. (SB) TEMPORARY SEDIMENT BARRIER OF SILT FENCE AND / OR STRAW BALES

REV	REV	REVISION DESCRIPTION	BY	CKD	APP
D	09/18/15	FERC FINAL	HMM	HMM	HMM
C	04/13/15	FERC DRAFT FILING	MLS	MWC	JMH
B	12/16/14	PRELIMINARY ISSUE	RJC	JAM	JMH
A	11/04/14	ISSUED FOR DRAFT RESOURCE REPORT 1	JBB	JMA	JMH

PennEast PIPELINE

PREPARED BY: Hatch Mott MacDonald

PENNEAST PIPELINE PROJECT

TYPICAL PAVED ROAD CROSSING CONTROL MEASURES (OPEN CUT)

FIGURE 26

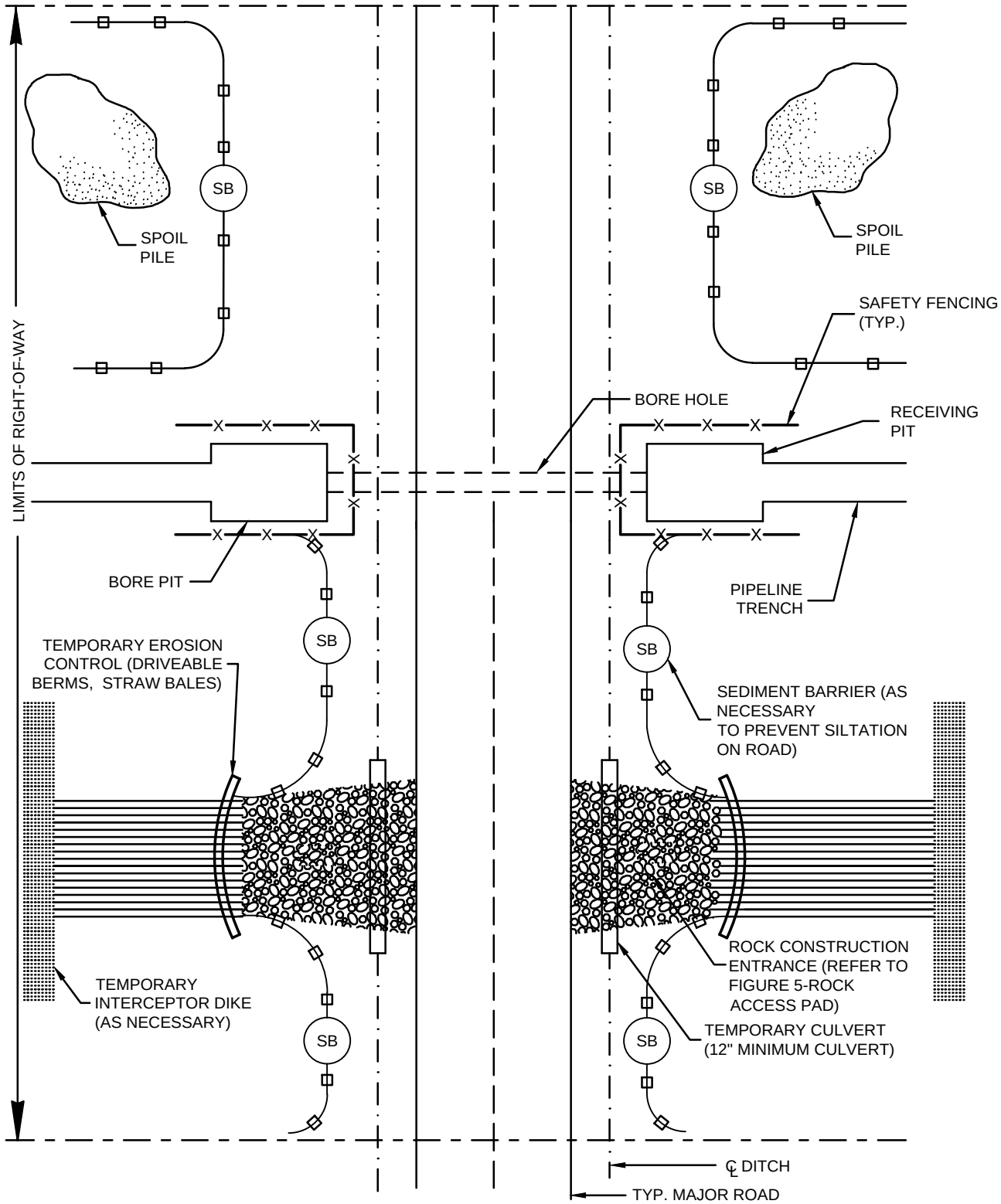

NOTES:

1. (SB) TEMPORARY SEDIMENT BARRIER OF SILT FENCE AND / OR STRAW BALES

Know what's below. Call before you dig.

REV	REV	REVISION DESCRIPTION	BY	CKD	APP
D	09/18/15	FERC FINAL	HMM	HMM	HMM
C	04/13/15	FERC DRAFT FILING	MLS	MWC	JMH
B	12/16/14	PRELIMINARY ISSUE	RJC	JAM	JMH
A	11/04/14	ISSUED FOR DRAFT RESOURCE REPORT 1	JBB	JMA	JMH

PennEast PIPELINE

PREPARED BY: Hatch Mott MacDonald

PENNEAST PIPELINE PROJECT

TYPICAL PAVED ROAD CROSSING CONTROL MEASURES (BORED CROSSING)

FIGURE 27

CONSTRUCTION SEQUENCE:
REFER TO SECTION 5.2 OF
EROSION AND SEDIMENT
CONTROL PLAN

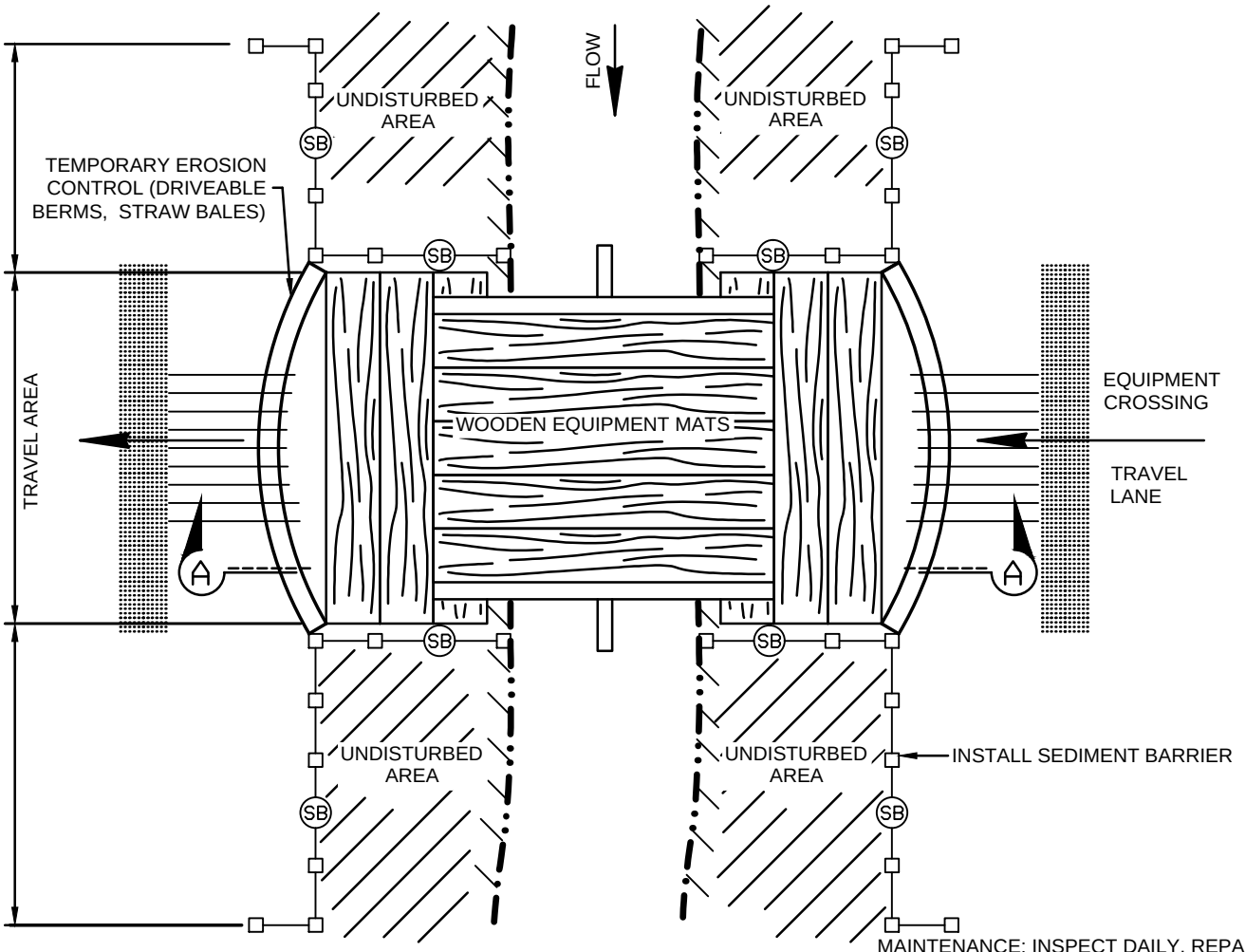

PLAN VIEW
N.T.S.

MAINTENANCE: INSPECT DAILY, REPAIR DAMAGES WITHIN 24 HOURS, REMOVE SEDIMENT DEPOSITS ON THE CROSSING OR APPROACHES WITHIN 24 HOURS.

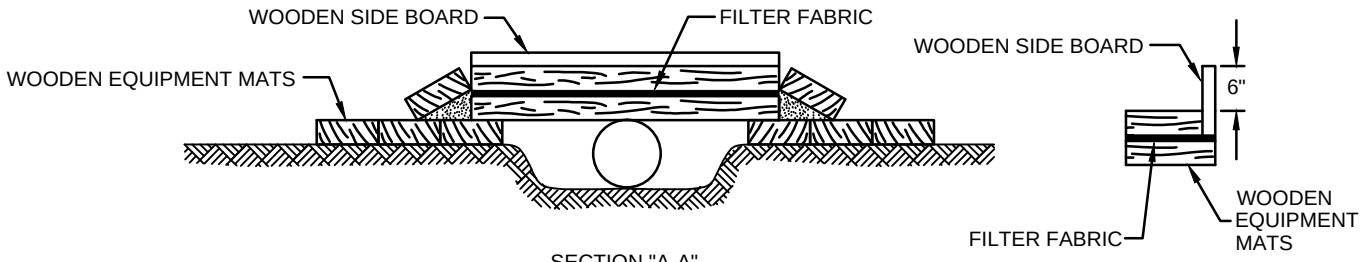

SECTION "A-A"
N.T.S.

NOTES:

1. SB TEMPORARY SEDIMENT BARRIER OF SILT FENCE AND / OR STRAW BALES. COMPOST FILTER SOCK (ABACT) TO BE USED IN HQ/EV WATERSHEDS.
2. WOODEN SIDE BOARDS AND FILTER FABRIC WILL BE USED TO KEEP SEDIMENT FROM FALLING INTO CREEK.
3. EQUIPMENT MATS TYPICALLY CONSTRUCTED OF HARDWOOD OR OTHER SUITABLE MATERIAL TO ACCOMMODATE THE HEAVIEST EQUIPMENT USED.
4. TEMPORARY WATERBAR TO DISCHARGE TO SEDIMENT REMOVAL DEVICE.

Know what's below. Call before you dig.

REV	REV	REVISION DESCRIPTION	BY	CKD	APP
D	09/18/15	FERC FINAL	HMM	HMM	HMM
C	04/13/15	FERC DRAFT FILING	MLS	MWC	JMH
B	12/16/14	PRELIMINARY ISSUE	RJC	JAM	JMH
A	11/04/14	ISSUED FOR DRAFT RESOURCE REPORT 1	JBB	JMA	JMH

PennEast PIPELINE

PREPARED BY: Hatch Mott MacDonald

PENNEAST PIPELINE PROJECT

TEMPORARY EQUIPMENT BRIDGE (EQUIPMENT MAT AND CULVERTS)

FIGURE 28

CONSTRUCTION SEQUENCE:
REFER TO SECTION 5.2 OF
EROSION AND SEDIMENT
CONTROL PLAN

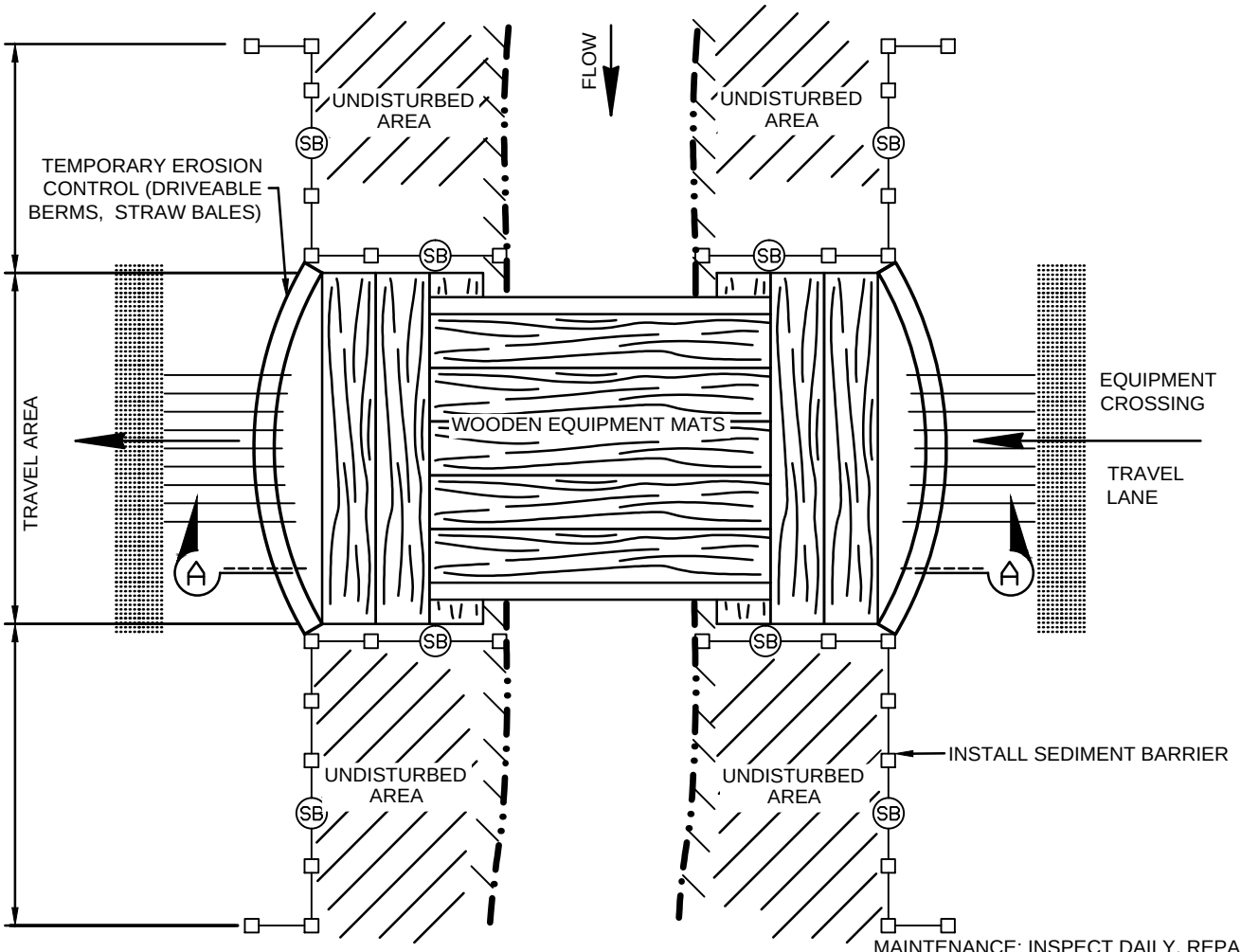

PLAN VIEW

N.T.S.

MAINTENANCE: INSPECT DAILY, REPAIR DAMAGES WITHIN 24 HOURS, REMOVE SEDIMENT DEPOSITS ON THE CROSSING OR APPROACHES WITHIN 24 HOURS.

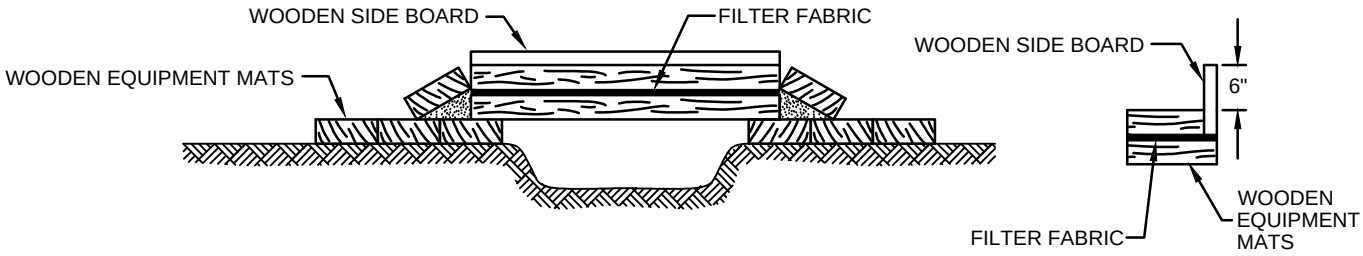

N.T.S.

NOTES:

1. SB TEMPORARY SEDIMENT BARRIER OF SILT FENCE AND / OR STRAW BALES. COMPOST FILTER SOCK (ABACT) TO BE USED IN HQ/EV WATERSHEDS.
2. WOODEN SIDE BOARDS AND FILTER FABRIC WILL BE USED TO KEEP SEDIMENT FROM FALLING INTO CREEK.
3. EQUIPMENT MATS TYPICALLY CONSTRUCTED OF HARDWOOD OR OTHER SUITABLE MATERIAL TO ACCOMMODATE THE HEAVIEST EQUIPMENT USED.
4. TEMPORARY WATERBAR TO DISCHARGE TO SEDIMENT REMOVAL DEVICE.

Know what's below. Call before you dig.

REV	REV	REVISION DESCRIPTION	BY	CKD	APP
D	09/18/15	FERC FINAL	HMM	HMM	HMM
C	04/13/15	FERC DRAFT FILING	MLS	MWC	JMH
B	12/16/14	PRELIMINARY ISSUE	RJC	JAM	JMH
A	11/04/14	ISSUED FOR DRAFT RESOURCE REPORT 1	JBB	JMA	JMH

PennEast PIPELINE

PREPARED BY: Hatch Mott MacDonald

PENNEAST PIPELINE PROJECT

TEMPORARY EQUIPMENT BRIDGE (EQUIPMENT MATS)

FIGURE 29

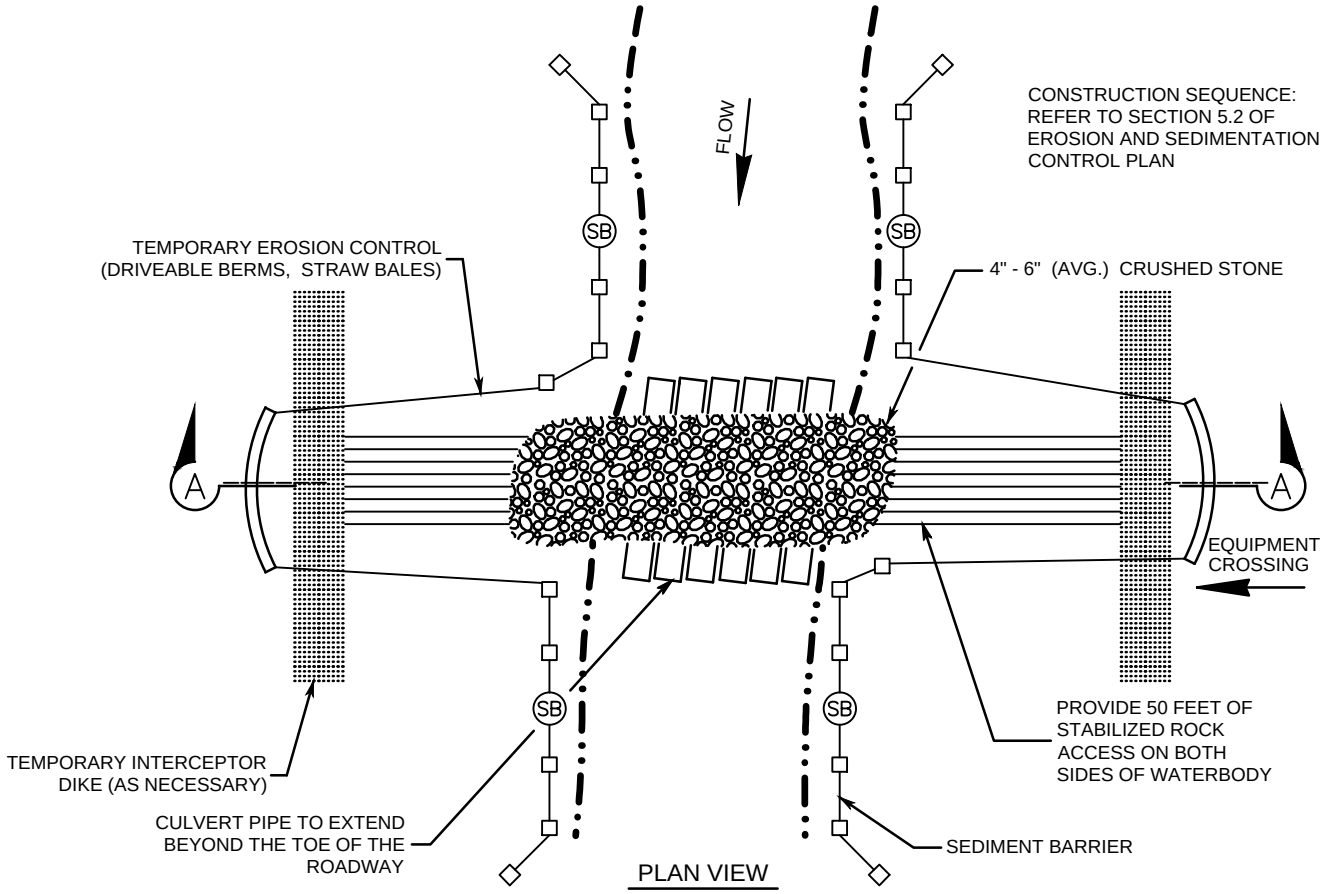

PLAN VIEW

MAINTENANCE: INSPECT DAILY, REPAIR DAMAGES WITHIN 24 HOURS, REMOVE SEDIMENT DEPOSITS ON THE CROSSING OR APPROACHES WITHIN 24 HOURS.

MIMIMUM DISTANCE BETWEEN CULVERTS TABLE

PIPE DIAMETER	MINIMUM DISTANCE
12" to 24"	12"
24" to 72"	1/2 DIAMETER (D)
72" to 120"	36"
PIPE ARCH SIZE	MINIMUM DISTANCE
18" x 11" to 25" x 16"	12"
25" x 16" to 72" x 44"	1/3 SPAN OF PIPE ARCH
ABOVE 72" x 44"	30"

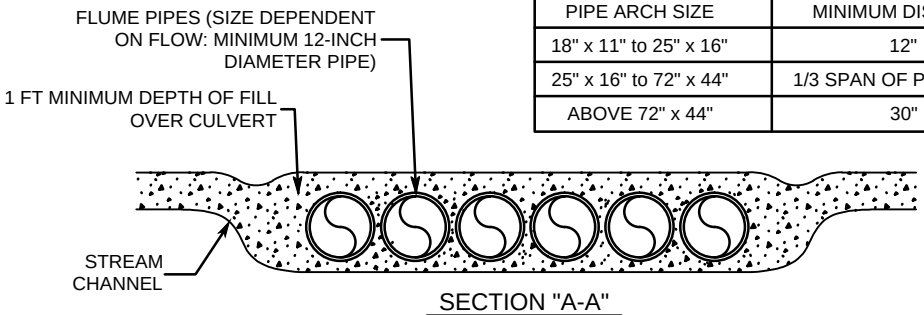

SECTION "A-A"

NOTES:

1. ALIGN FLUME PIPES TO PREVENT EROSION AND STREAMBED SCOUR.
2. SB TEMPORARY SEDIMENT BARRIER OF SILT FENCE AND/ OR STRAW BALES. COMPOST FILTER SOCK (ABACT)TO BE USED IN HQ/EV WATERSHEDS.
3. CULVERT PIPES WILL HAVE A MINIMUM DIAMETER OF 12".
4. TEMPORARY INTERCEPTOR DIKE TO DISCHARGE TO SEDIMENT REMOVAL DEVICE.

Know what's below. Call before you dig.

REV	REV	REVISION DESCRIPTION	BY	CKD	APP
D	09/18/15	FERC FINAL	HMM	HMM	HMM
C	04/13/15	FERC DRAFT FILING	MLS	MWC	JMH
B	12/16/14	PRELIMINARY ISSUE	RJC	JAM	JMH
A	11/04/14	ISSUED FOR DRAFT RESOURCE REPORT 1	JBB	JMA	JMH

PennEast PIPELINE

PREPARED BY: Hatch Mott MacDonald

PENNEAST PIPELINE PROJECT

TEMPORARY EQUIPMENT BRIDGE (CRUSHED STONE AND CULVERTS)

FIGURE 30

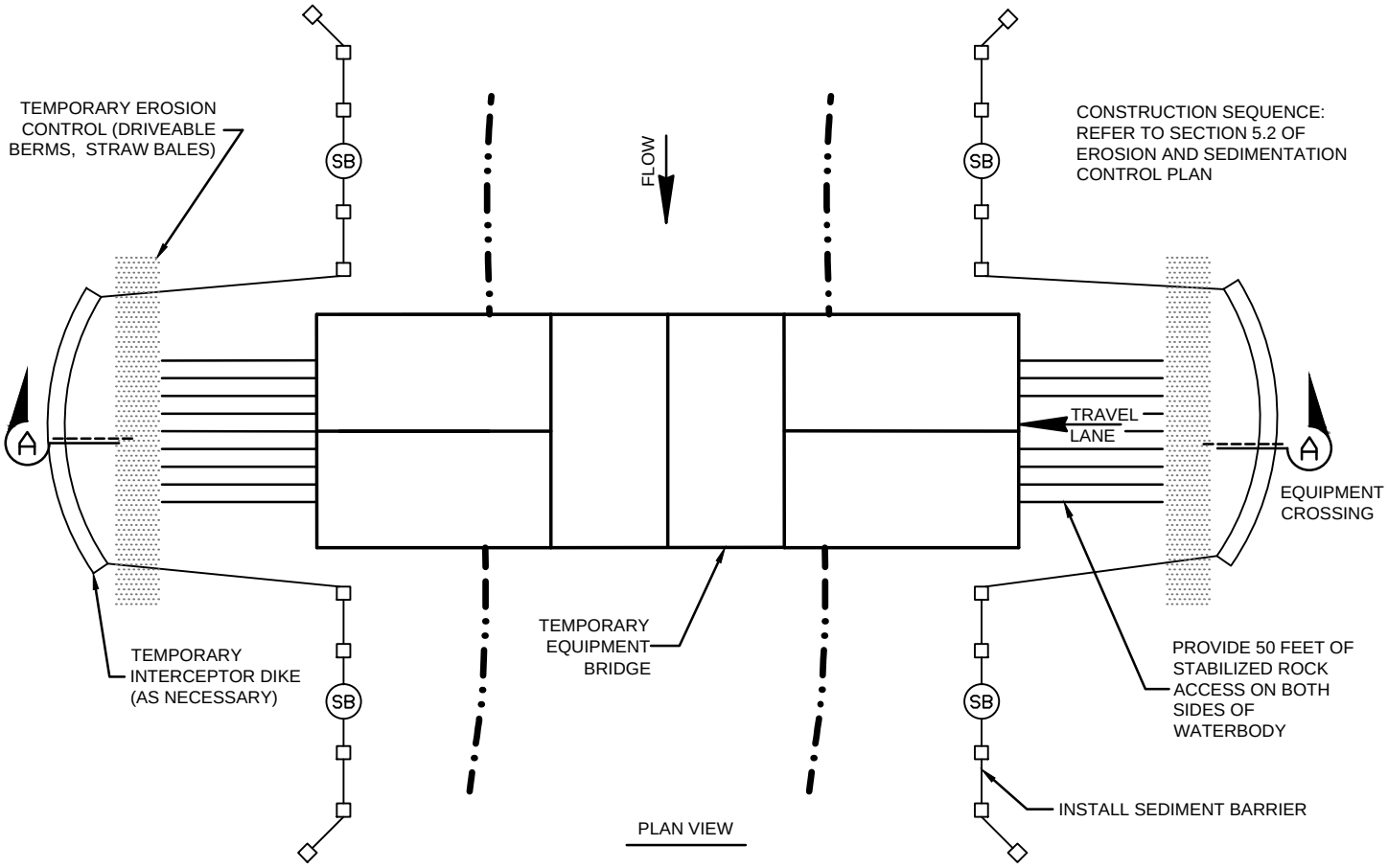

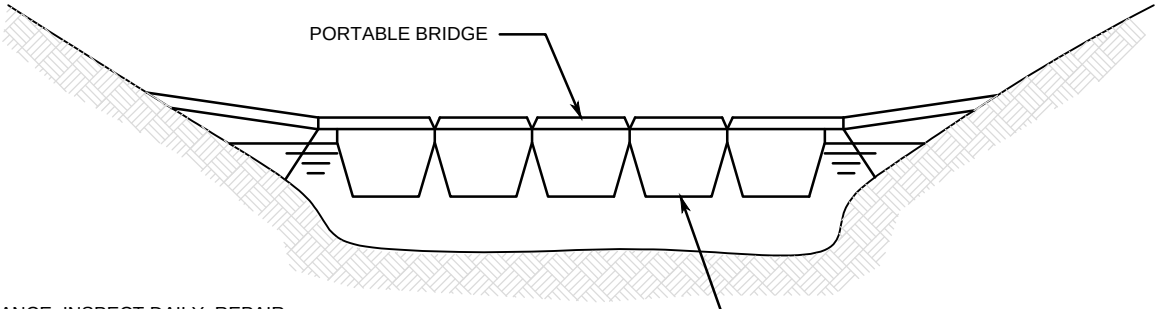

MAINTENANCE: INSPECT DAILY, REPAIR DAMAGES WITHIN 24 HOURS, REMOVE SEDIMENT DEPOSITS ON THE CROSSING OR APPROACHES WITHIN 24 HOURS.

NOTES:

1. STABILIZE EDGES WITH SANDBAGS OR STONE.

2. REMOVE BRIDGE DURING CLEANUP.

3. TEMPORARY INTERCEPTOR DIKE TO DISCHARGE TO SEDIMENT REMOVAL DEVICE.

4. SB TEMPORARY SEDIMENT BARRIER OF SILT FENCE AND/ OR STRAW BALES. COMPOST FILTER SOCK (ABACT) TO BE USED IN HQ/EV WATERSHEDS .

Know what's below. Call before you dig.

REV	REV	REVISION DESCRIPTION	BY	CKD	APP
D	09/18/15	FERC FINAL	HMM	HMM	HMM
C	04/13/15	FERC DRAFT FILING	MLS	MWC	JMH
B	12/16/14	PRELIMINARY ISSUE	RJC	JAM	JMH
A	11/04/14	ISSUED FOR DRAFT RESOURCE REPORT 1	JBB	JMA	JMH

PennEast PIPELINE

PREPARED BY: Hatch Mott MacDonald

PENNEAST PIPELINE PROJECT

TEMPORARY EQUIPMENT BRIDGE (FLEXI-FLOAT OR PORTABALE)

FIGURE 31

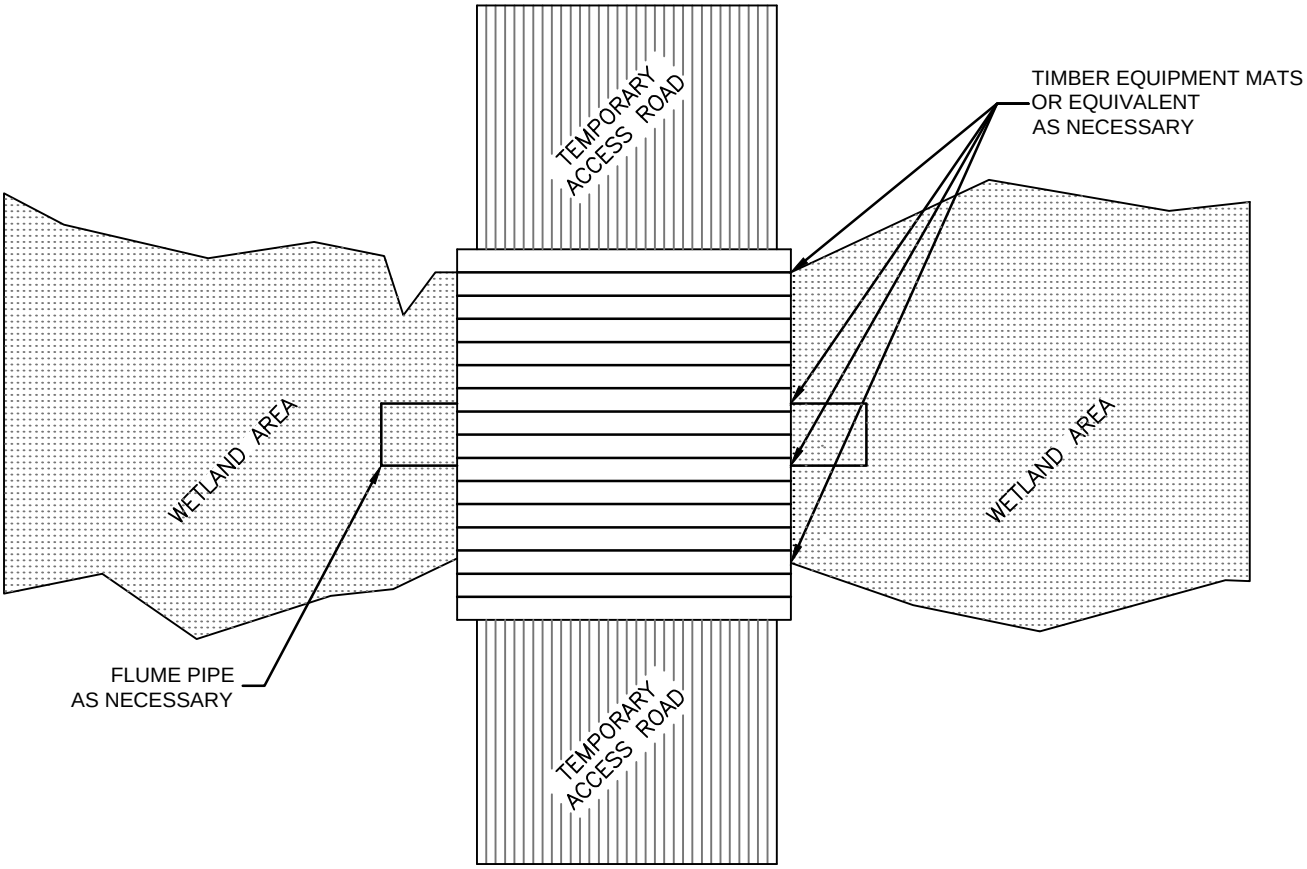

PLAN VIEW
N.T.S.

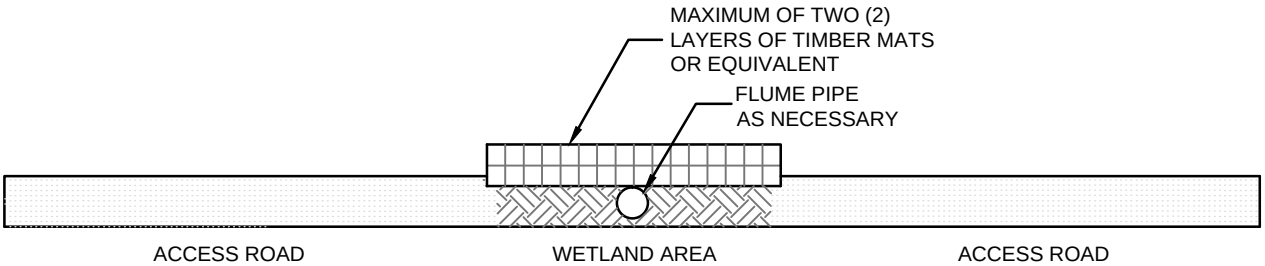

CROSS SECTION
N.T.S.

REV	REV	REVISION DESCRIPTION	BY	CKD	APP

PennEast PIPELINE

PREPARED BY: Hatch Mott MacDonald

PENNEAST PIPELINE PROJECT

TYPICAL TEMPORARY ACCESS ROAD THROUGH WETLANDS

FIGURE 32

WETLAND CROSSING GENERAL PROCEDURES

Clearing and Grading

1. Limit construction activity and ground disturbance in wetland areas to a construction ROW width of 75 feet or as shown on the construction plans. With written approval from the FERC for site-specific conditions, construction ROW width within the boundaries of federally delineated wetlands may be expanded beyond 75 feet.

2. Wetland boundaries and buffers must be clearly marked in the field with signs and/or highly visible flagging until construction-related ground disturbing activities are complete.

3. Restrict extra work areas (such as staging areas and additional spoil storage areas) to those shown only on the construction plans. All extra work areas must be located at least 50 feet away from wetland boundaries, except where the adjacent upland consists of actively cultivated or rotated cropland or other disturbed land. If site-specific conditions do not permit a 50-foot setback, the Company can receive written approval from the FERC to locate these extra work areas closer than 50 feet from the wetland.

4. Above ground facilities shall not be located in any wetland, except as permitted or where the location of such facilities outside of wetlands would prohibit compliance with DOT regulations.

5. Use timber riprap, prefabricated equipment mats or terra mats on the working side of the ROW during clearing operations. Do not use more than two layers of timber riprap to stabilize the ROW.

6. Cut vegetation just above ground level and grind stumps to ground level, leaving existing root systems in place.Immediately remove all cut trees, chips from grinding and branches from the wetland and stockpile in an upland area on ROW for disposal.

7. Limit pulling of tree stumps and grading activities to directly over trench line. Do not grade or remove stumps or root systems from the rest of the ROW in wetlands unless the Chief Inspector and EI determine that safety-related construction constraints require removal of tree stumps from under the working side of the ROW.

8. Do not cut trees outside of the construction ROW to obtain timber for riprap or equipment mats.

9. Cleared materials (slash, logs, brush, wood chips) shall not be permanently placed within wetland areas.

Temporary Erosion and Sediment Control

1. Install sediment barriers immediately prior to ground disturbance at the following locations:

   A. Within the ROW at the edge of the boundary between wetland and upland;

   B. Across the entire ROW immediately upslope of the wetland boundary to prevent sediment flow into the wetland;

   C. Along the edge of the ROW, where the ROW slopes toward the wetland, to protect adjacent off ROW wetland; and

   D. Along the edge of the ROW as necessary to contain spoil and sediment within the ROW through wetlands.

2. Maintain all sediment barriers throughout construction and reinstall as necessary (such as after backfilling of the trench) until replaced by permanent erosion controls or restoration of adjacent upland areas is complete.

3. Depth of topsoil segregation should be 12 inches, if present, unless otherwise indicated by the landowner if relating to agricultural land.

Know what's below. Call before you dig.

REV	REV	REVISION DESCRIPTION	BY	CKD	APP
D	09/18/15	FERC FINAL	HMM	HMM	HMM
C	04/13/15	FERC DRAFT FILING	MLS	MWC	JMH
B	12/16/14	PRELIMINARY ISSUE	RJC	JAM	JMH
A	11/04/14	ISSUED FOR DRAFT RESOURCE REPORT 1	JBB	JMA	JMH

PennEast PIPELINE

PREPARED BY: Hatch Mott MacDonald

PENNEAST PIPELINE PROJECT

WETLAND
PIPELINE CONSTRUCTION REQUIREMENTS

FIGURE 33

Crossing Procedure

1. Minimize the length of time that topsoil is segregated and the trench is open.
2. Do not use rock / soil imported from outside the wetland, tree stumps, or brush riprap to stabilize the ROW.
3. Perform topsoil segregation and trench dewatering.
4. Assemble the pipeline in an upland area unless the wetland is dry enough to adequately support skids and pipe.
5. Use "push-off" or "float" techniques to place the pipe in the trench where water and other site conditions allow.
6. Install trench plugs and/or seal the trench bottom as necessary to maintain the original wetland hydrology at locations where the pipeline trench may drain a wetland.
7. Install a permanent interceptor dike and a trench plug at the base of slopes near the boundary between the wetland and adjacent upland areas. In addition, install sediment barriers. Permanent interceptor dikes shall not be installed in agricultural areas.
8. Restore segregated topsoil to its original position after backfilling is complete. When required, additional material imported from off the ROW must be approved by the EI. The original wetland contours and flow regimes will be restored to the extent practical.

Cleanup and Restoration

1. Revegetate the ROW with annual ryegrass at 45 lbs / acre Pure Live Seed or with the recommended wetland seed mix, unless standing water is present.
2. **Do not use lime or fertilizer in wetland areas.**
3. Mulch the disturbed ROW.
4. In the event that final seeding and mulching is deferred more than 20 days after the trench is backfilled, all slopes adjacent to wetlands shall be mulched with 3 tons / acre of straw for a minimum of 100 feet on each side of the crossing.
5. Remove all timber riprap and prefabricated equipment mats upon completion of construction.
6. Develop specific procedures in coordination with the appropriate land management or state agency, where necessary, to prevent the invasion or spread of undesirable exotic vegetation (such as purple loose strife and phragmites). Additionally, install matting at exceptional value wetland crossing.
7. Ensure that all disturbed areas permanently revegetate.
8. Remove temporary sediment barriers located at the boundary between wetland and adjacent upland areas after upland revegetation and stabilization of adjacent upland areas are sucessful.

Know what's below. Call before you dig.

REV	REV	REVISION DESCRIPTION	BY	CKD	APP
D	09/18/15	FERC FINAL	HMM	HMM	HMM
C	04/13/15	FERC DRAFT FILING	MLS	MWC	JMH
B	12/16/14	PRELIMINARY ISSUE	RJC	JAM	JMH
A	11/04/14	ISSUED FOR DRAFT RESOURCE REPORT 1	JBB	JMA	JMH

PennEast PIPELINE

PREPARED BY: Hatch Mott MacDonald

PENNEAST PIPELINE PROJECT

WETLAND
PIPELINE CONSTRUCTION REQUIREMENTS

FIGURE 34

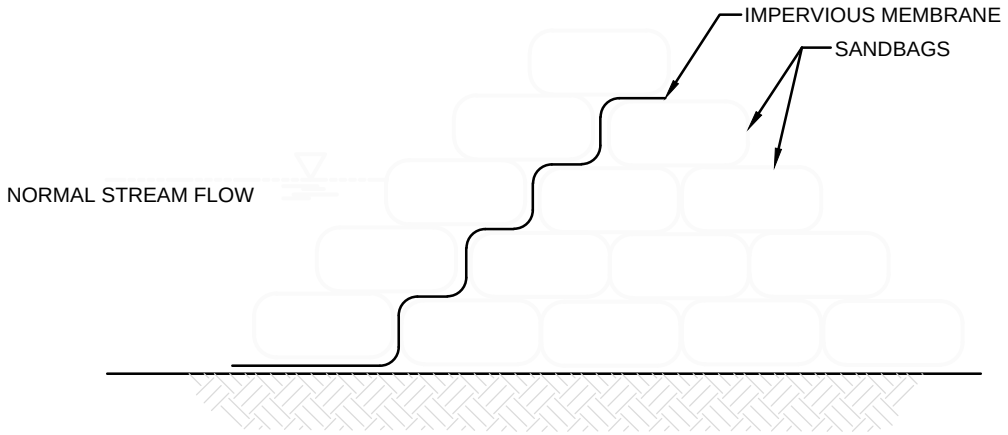

NOTE: 2 BAG MIN. HEIGHT ABOVE NORMAL BASE FLOW

REV	REV	REVISION DESCRIPTION	BY	CKD	APP
D	09/18/15	FERC FINAL	HMM	HMM	HMM
C	04/13/15	FERC DRAFT FILING	MLS	MWC	JMH
B	12/16/14	PRELIMINARY ISSUE	RJC	JAM	JMH
A	11/04/14	ISSUED FOR DRAFT RESOURCE REPORT 1	JBB	JMA	JMH

PennEast PIPELINE

PREPARED BY: Hatch Mott MacDonald

PENNEAST PIPELINE PROJECT

SANDBAG DIVERSION DAM OR COFFERDAM

FIGURE 35

Know what's below. Call before you dig.

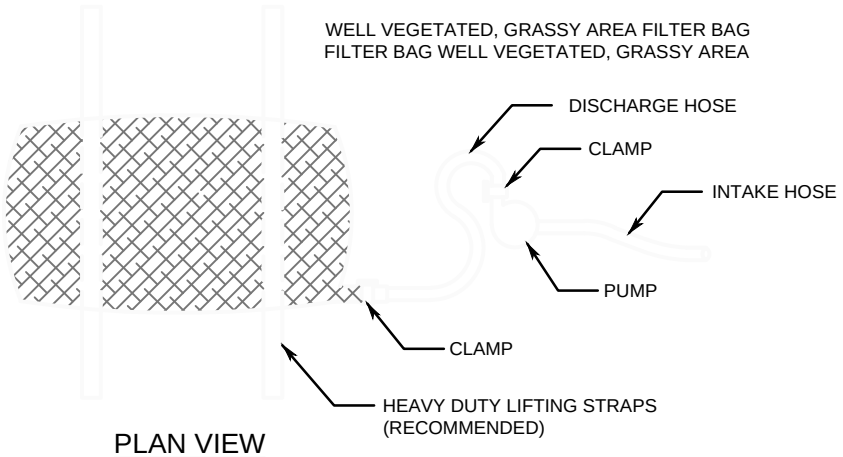

PLAN VIEW

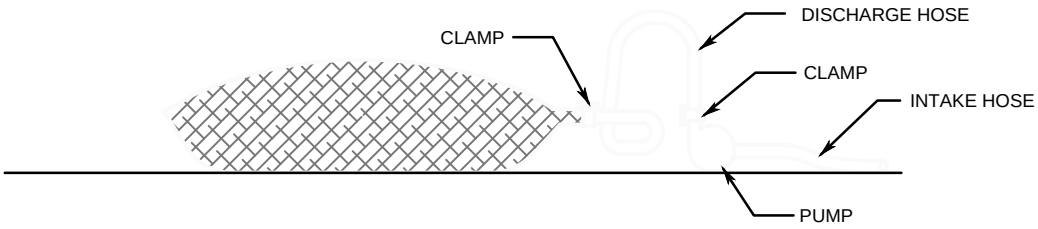

ELEVATION VIEW

NOTES:

LOW VOLUME FILTER BAGS SHALL BE MADE FROM NON-WOVEN GEOTEXTILE MATERIAL SEWN WITH HIGH STRENGTH, DOUBLE STITCHED "J" TYPE SEAMS. THEY SHALL BE CAPABLE OF TRAPPING PARTICLES LARGER THAN 150 MICRONS. HIGH VOLUME FILTER BAGS SHALL BE MADE FROM WOVEN GEOTEXTILES THAT MEET THE FOLLOWING STANDARDS:

PROPERTY	TEST METHOD	MINIMUM STANDARD
AVG. WIDE WIDTH STRENGTH	ASTM D-4884	60 LB/IN
GRAB TENSILE	ASTM D-4632	205 LB
PUNCTURE	ASTM D-4833	110 LB
MULLEN BURST	ASTM D-3786	350 PSI
UV RESISTANCE	ASTM D-4355	70%
AOS % RETAINED	ASTM D-4751	80 SIEVE

A SUITABLE MEANS OF ACCESSING THE BAG WITH MACHINERY REQUIRED FOR DISPOSAL PURPOSES SHALL BE PROVIDED. FILTER BAGS SHALL BE REPLACED WHEN THEY BECOME 1/2 FULL OF SEDIMENT. SPARE BAGS SHALL BE KEPT AVAILABLE FOR REPLACEMENT OF THOSE THAT HAVE FAILED OR ARE FILLED. BAGS SHALL BE PLACED ON STRAPS TO FACILITATE REMOVAL UNLESS BAGS COME WITH LIFTING STRAPS ALREADY ATTACHED.

BAGS SHALL BE LOCATED IN WELL-VEGETATED (GRASSY) AREA, AND DISCHARGE ONTO STABLE, EROSION RESISTANT AREAS. WHERE THIS IS NOT POSSIBLE, A GEOTEXTILE UNDERLAYMENT AND FLOW PATH SHALL BE PROVIDED. BAGS MAY BE PLACED ON FILTER STONE TO INCREASE DISCHARGE CAPACITY. BAGS SHALL NOT BE PLACED ON SLOPES GREATER THAN 5%. FOR SLOPES EXCEEDING 5%, CLEAN ROCK OR OTHER NON-ERODIBLE AND NON-POLLUTING MATERIAL MAY BE PLACED UNDER THE BAG TO REDUCE SLOPE STEEPNESS.

NO DOWNSLOPE SEDIMENT BARRIER IS REQUIRED FOR MOST INSTALLATIONS. COMPOST BERM OR COMPOST FILTER SOCK SHALL BE INSTALLED BELOW BAGS LOCATED IN HQ OR EV WATERSHEDS, WITHIN 50 FEET OF ANY RECEIVING SURFACE WATER OR WHERE GRASSY AREA IS NOT AVAILABLE.

THE PUMP DISCHARGE HOSE SHALL BE INSERTED INTO THE BAGS IN THE MANNER SPECIFIED BY THE MANUFACTURER AND SECURELY CLAMPED. A PIECE OF PVC PIPE IS RECOMMENDED FOR THIS PURPOSE.

THE PUMPING RATE SHALL BE NO GREATER THAN 750 GPM OR 1/2 THE MAXIMUM SPECIFIED BY THE MANUFACTURER, WHICHEVER IS LESS. PUMP INTAKES SHALL BE FLOATING AND SCREENED.

FILTER BAGS SHALL BE INSPECTED DAILY. IF ANY PROBLEM IS DETECTED, PUMPING SHALL CEASE IMMEDIATELY AND NOT RESUME UNTIL THE PROBLEM IS CORRECTED.

Know what's below. Call before you dig.

REV	REV	REVISION DESCRIPTION	BY	CKD	APP
D	09/18/15	FERC FINAL	HMM	HMM	HMM
C	04/13/15	FERC DRAFT FILING	MLS	MWC	JMH
B	12/16/14	PRELIMINARY ISSUE	RJC	JAM	JMH
A	11/04/14	ISSUED FOR DRAFT RESOURCE REPORT 1	JBB	JMA	JMH

PennEast PIPELINE

PREPARED BY: Hatch Mott MacDonald

PENNEAST PIPELINE PROJECT

FILTER BAG

FIGURE 36

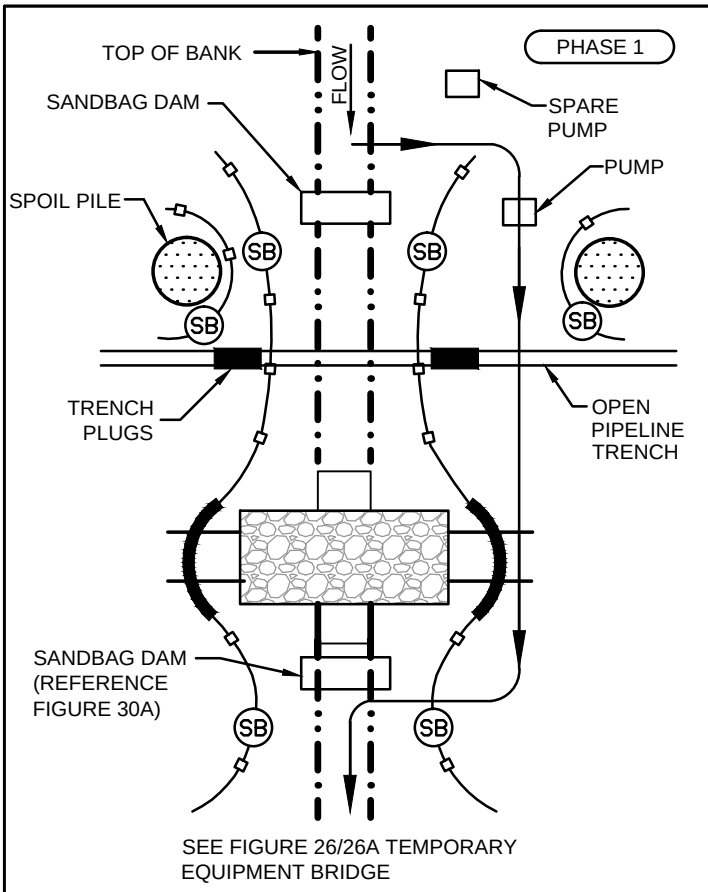

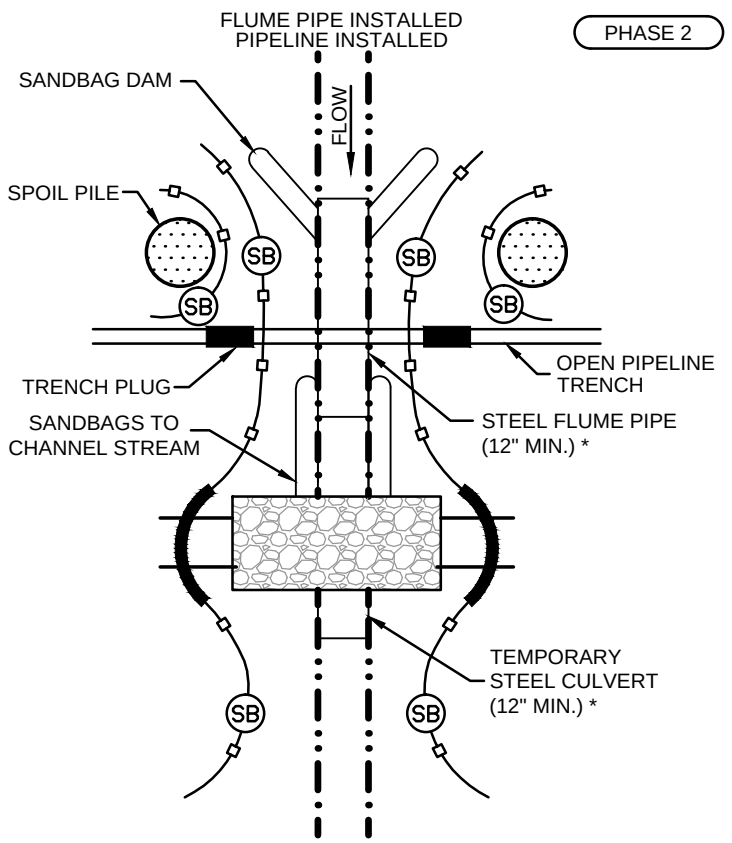

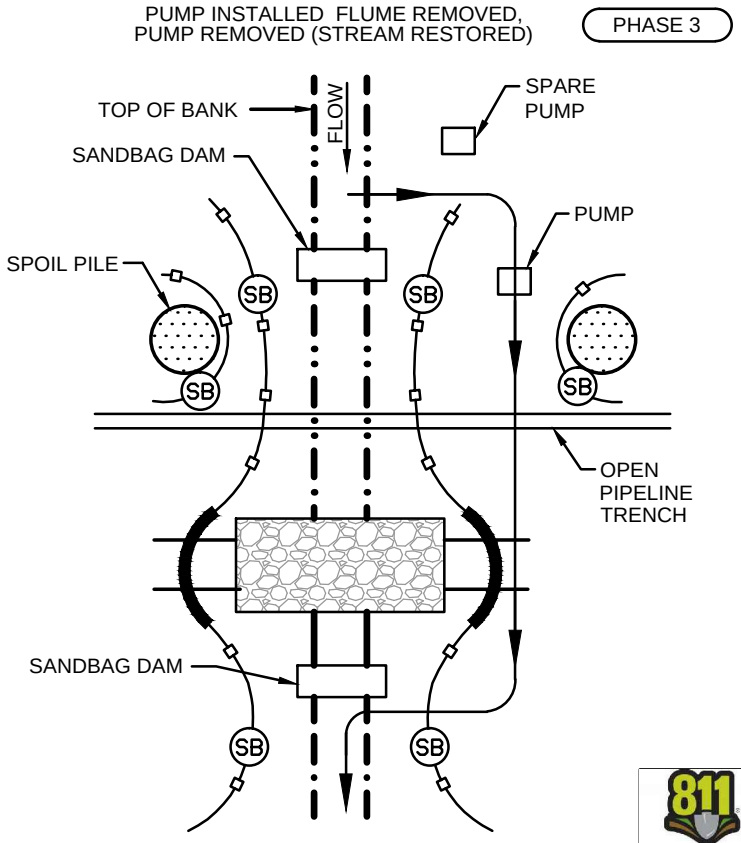

* ACTUAL NUMBER OF FLUMES AND CULVERT PIPES REQUIRED TO BE DETERMINED BY STREAM WIDTH.

REV	REV	REVISION DESCRIPTION	BY	CKD	APP
D	09/18/15	FERC FINAL	HMM	HMM	HMM
C	04/13/15	FERC DRAFT FILING	MLS	MWC	JMH
B	12/16/14	PRELIMINARY ISSUE	RJC	JAM	JMH
A	11/04/14	ISSUED FOR DRAFT RESOURCE REPORT 1	JBB	JMA	JMH

PennEast PIPELINE

PREPARED BY: Hatch Mott MacDonald

PENNEAST PIPELINE PROJECT

MODIFIED DRY CROSSINGS

FIGURE 37

Know what's below. Call before you dig.

CONSTRUCTION SEQUENCE:

PHASE 1:
- INSTALL DAM AND PUMP CROSSING IF FLOW IS PRESENT AT THE TIME OF CONSTRUCTION
- DIG PIPELINE TRENCH

PHASE 2:
- INSTALL FLUME CROSSING
- REMOVE DAM AND PUMP COMPONENTS
- MONITOR AND MAINTAIN FLUME CROSSING AND ASSOCIATED SEDIMENT BARRIERS AS REQUIRED

PHASE 3:
- RE-INSTALL DAM AND PUMP CROSSING
- REMOVE FLUME
- INSTALL PIPELINE
- BACKFILL TRENCH AND COMPLETE RESTORATION
- PIPELINE INSTALLATION MUST BE COMPLETED WITHIN 24 HOURS FOR MINOR WATERBODIES. THIS TIME PERIOD BEGINS AS SOON AS FLUME PIPE IS REMOVED.

GENERAL NOTES:

1. SAND BAGS MUST BE FILLED WITH SAND FREE OF SILT, ORGANICS, AND OTHER MATERIAL.
2. SB TEMPORARY SEDIMENT BARRIER OF SILT FENCE AND / OR STRAW BALES, OR OTHER APPROPRIATE MATERIALS. COMPOST FILTER SOCK (ABACT) IN HQ/EV WATERSHEDS.
3. DO NOT REFUEL OR STORE FUEL WITHIN 100 FEET OF WATERBODY, UNLESS APPROVED IN ADVANCE BY ENVIRONMENTAL INSPECTOR.
4. GRUBBING SHALL NOT TAKE PLACE WITHIN 10 FEET OF TOP-OF-BANK UNTIL ALL MATERIALS REQUIRED TO COMPLETE THE CROSSING ARE ON SITE AND PIPE IS READY FOR INSTALLATION.
5. TRENCH PLUGS SHALL BE INSTALLED WITHIN THE TRENCH ON BOTH SIDES OF THE STREAM CHANNEL (SEE FIGURE 20B).
6. WATER ACCUMULATING WITHIN THE WORK AREA SHALL BE PUMPED TO A SEDIMENT BAG OR SEDIMENT TRAP.
7. ALL EXCESS EXCAVATED MATERIAL SHALL BE IMMEDIATELY REMOVED FROM THE STREAM CROSSING AREA.
8. ALL DISTURBED AREAS WITHIN 50 FEET OF THE TOP-OF-BANK SHALL BE BLANKETED OR MATTED WITHIN 72 HOURS OF INITIAL DISTURBANCE UNLESS OTHERWISE AUTHORIZED. APPROPRIATE STREAMBANK PROTECTION SHALL BE PROVIDED WITHIN THE CHANNEL.

FLUMED CROSSING NOTES:

1. ALIGN FLUME(S) TO PREVENT BANK EROSION AND STREAM SCOUR.
2. THE ENDS OF THE FLUME AND CULVERT MUST EXTEND TO AN UNDISTURBED AREA.

PUMPED CROSSING NOTES:

1. INSTALL AND SEAL SANDBAGS UPSTREAM AND DOWNSTREAM OF THE CROSSING.
2. CREATE AN UPSTREAM SUMP USING SANDBAGS IF NATURAL SUMP IS UNAVAILABLE FOR THE INTAKE HOSE.
3. MONITOR PUMPS AT ALL TIMES DURING STREAM CROSSING PROCEDURE.
4. USE SUFFICIENT PUMPS, INCLUDING ONSITE BACKUP PUMPS, TO MAINTAIN DOWNSTREAM FLOW.
5. SCREEN PUMP INTAKES AND MAINTAIN SUFFICIENT DISTANCE BETWEEN PUMP INTAKE AND STREAM BOTTOM TO PREVENT PUMPING OF CHANNEL BOTTOM MATERIALS.
6. NUMBER OF FLUME PIPES FOR EQUIPMENT BRIDGE WILL VARY DEPENDING ON SITE CONDITIONS.

811 Know what's below. Call before you dig.

REV	REV	REVISION DESCRIPTION	BY	CKD	APP
D	09/18/15	FERC FINAL	HMM	HMM	HMM
C	04/13/15	FERC DRAFT FILING	MLS	MWC	JMH
B	12/16/14	PRELIMINARY ISSUE	RJC	JAM	JMH
A	11/04/14	ISSUED FOR DRAFT RESOURCE REPORT 1	JBB	JMA	JMH

PennEast PIPELINE

PREPARED BY: Hatch Mott MacDonald

PENNEAST PIPELINE PROJECT

MODIFIED DRY CROSSINGS
CONSTRUCTION SEQUENCE AND NOTE

FIGURE 38

SEED MIX RECOMMENDATIONS
"NORTHERN ZONE"[1]

UPLAND AREAS

Lime	4 tons/acre, or per soil test recommendations
Fertilizer	1000 lbs./acre (10-20-20)
Mulch (Wheat Straw)	3.0 tons/acre

1. **Upland Seed Mix** — 75 lbs./acre Pure Live Seed (PLS)

Kentucky Bluegrass	25%
Red Fescue[2]	25%
Redtop	10%
Perennial ryegrass	25%
White clover	5%
Birdsfoot Trefoil (Minimum 20% hard seed)	10%

2. **Pasture Mix** — 20 lbs./acre PLS

(For use only in disturbed pasture areas with landowner's permission.)

Kentucky Bluegrass	31%
Medium Red clover	26%
Norcen Trefoil	17%
Poly Perennial Rye	26%

3. **Recommended Seeding Dates:**

(For the establishment of temporary or permanent vegetation.)

Spring:	March 15 - May 30
Fall:	August 1 - October 15

WINTER STABILIZATION

If restoration can not occur prior to October 15, seed the ROW with 1.5 bushels per acre of winter rye or similar variety of rye as requested by the landowner. Mulch ROW at 3.0 tons per acre with wheat straw, including areas adjacent to streams and wetland crossings. Seed segregated topsoil piles with winter rye and mulch at a rate of 3.0 tons per acre.

WETLAND AREAS

DO NOT USE LIME OR FERTILIZER !!!

Mulch (Wheat Straw) — 3.0 tons/acre

1. **Wetland Seed Mix**

Annual Ryegrass — 40 lbs./acre PLS

1 The Northern Zone is generally defined as extending north from the Northern borders of Arkansas and Tennessee.

2 Fescue must be endophyte-free.

NOTE: For Seeding/Fertility Recommendations in upland areas refer to Attachment 1.

Know what's below. Call before you dig.

REV	REV	REVISION DESCRIPTION	BY	CKD	APP
D	09/18/15	FERC FINAL	HMM	HMM	HMM
C	04/13/15	FERC DRAFT FILING	MLS	MWC	JMH
B	12/16/14	PRELIMINARY ISSUE	RJC	JAM	JMH
A	11/04/14	ISSUED FOR DRAFT RESOURCE REPORT 1	JBB	JMA	JMH

PennEast PIPELINE

PREPARED BY: Hatch Mott MacDonald

PENNEAST PIPELINE PROJECT

SEED MIX RECOMMENDATIONS NORTHERN ZONE

FIGURE 39