STATE	FEDERAL PROJECT NO.
N.J.	BR-080-5(094)

State of New Jersey
Department of Transportation

PLANS OF

ROUTE 80 BRIDGES OVER
ROUTE 287 NORTHBOUND AND SMITH ROAD

FROM M.P. 43.41 TO M.P. 44.07

CONTRACT NO. 043003714
GRADING, PAVING & STRUCTURES

TOWNSHIP OF PARSIPPANY-TROY HILLS
SCALE AS INDICATED

MORRIS COUNTY
AUGUST 2010

UTILITIES
NJ DEPARTMENT OF TRANSPORTATION (HIGHWAY LIGHTING & ITS)
JERSEY CENTRAL POWER AND LIGHT COMPANY (ELECTRIC)
VERIZON-NJ, INC. (TELEPHONE)
TOWNSHIP OF PARSIPPANY-TROY HILLS (WATER MAINS)

BRIDGES IN THIS CONTRACT	
1	BRIDGE NO. 1414-168, ROUTE I-80 OVER ROUTE I-287 NORTHBOUND & RAMPS D & H
2	BRIDGE NO. 1414-169, ROUTE I-80 OVER SMITH ROAD

DESIGN TRAFFIC DATA		
ROUTE 80		
A.D.T. (2006) - 2 WAY	=	159,050 VPD
A.D.T. (2030) - 2 WAY	=	236,450 VPD
D.H.V. (2030) - 2 WAY	=	21,280 VPD
D	=	50 %
T	=	10 %
V	=	70 MPH

PROJECT CATEGORIES	I - 3R

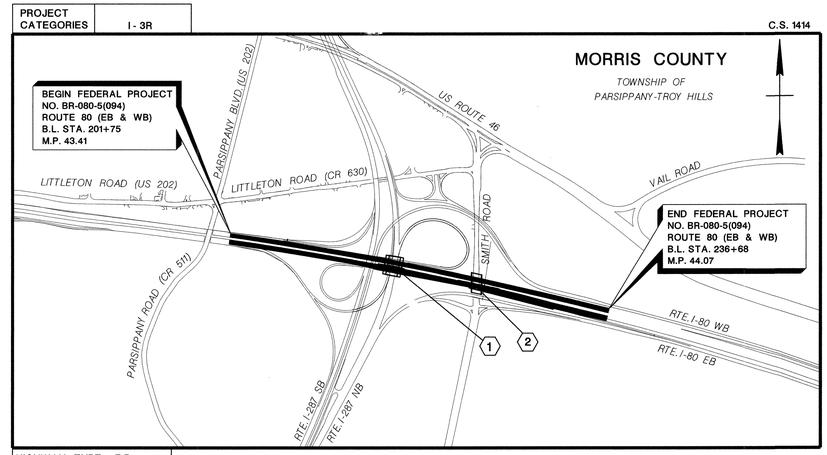

HIGHWAY TYPE - F.P.

KEY MAP

1500 750 0 1500

INDEX OF SHEETS	
SHEET NO.	DESCRIPTION
1	KEY
2-3	ESTIMATE-DISTRIBUTION OF QUANTITIES
4	TYPICAL SECTIONS
5	PLAN SHEET INDEX
6-9	CONSTRUCTION PLANS
10	ENVIRONMENTAL PLANS
11-12	PROFILES
13-14	TIES
15-17	GRADES
18-45	TRAFFIC CONTROL AND STAGING PLANS
46-48	ELECTRICAL PLANS
49-58	ITS PLANS
59-67	TRAFFIC SIGNING AND STRIPING PLANS
68-71	CONSTRUCTION DETAILS
72-129	BRIDGE PLANS

STANDARD ROADWAY CONSTRUCTION / TRAFFIC CONTROL / BRIDGE CONSTRUCTION DETAILS BOOKLET DATED 2007 AND STANDARD ELECTRICAL DETAILS, DATED 2007 ARE APPLICABLE TO THIS PROJECT EXCEPT FOR THOSE DETAILS CONTAINED HEREIN.

MID-POINT OF PROJECT
LONGITUDE: 74°24'56" W
LATITUDE: 40°51'50" N

"CHANGES MADE TO THESE PLANS SINCE SIGNATURE BY THE CONSULTANT MAY BE DETERMINED BY COMPARISON OF THE PLANS FILED AT THE DEPARTMENT WITH THOSE FILED AT THE OFFICE OF THE CONSULTANT"

DEWBERRY-GOODKIND, INC.

CERTIFICATE OF AUTHORIZATION #24GA28047600

ANTHONY FULCO P.E.

NEW JERSEY PROFESSIONAL ENGINEER LICENSE NO. 24GE03993900

LENGTH OF PROJECT ROUTE 80 = 3,493 LIN. FT. OR 0.66 MILES
TOTAL LENGTH OF PROJECT = 3,493 LIN. FT. OR 0.66 MILES

TOTAL LENGTH OF FEDERAL PROJECT NO. BR-080-5(094) = 3,493 LIN. FT. OR 0.66 MILES

2007 STANDARD SPECIFICATIONS FOR ROAD AND BRIDGE CONSTRUCTION TO GOVERN

Submitted by _____ Director, Division Of Project Management — Date 9/13/10

Approved by _____ State Transportation Engineer — Date 9/14/10

Dewberry-Goodkind, Inc.
Bloomfield, N.J.

STATE	FEDERAL PROJECT NO.
N.J.	BR-080-5(094)

SEQ. NO.	ITEM NO.	DESCRIPTION	UNIT	CONTRACT QUANTITY	PLAN SHEET TOTALS	IF AND WHERE DIRECTED	AS-BUILT QUANTITY	BR-080-5(094) QUANTITY	STATE QUANTITY	DISTRIBUTION: PLAN SHEET QUANTITY
1	151003M	PERFORMANCE BOND AND PAYMENT BOND	LUMP SUM	LUMP SUM		LUMP SUM				
2	152003P	OWNER'S AND CONTRACTOR'S PROTECTIVE LIABILITY INSURANCE	LUMP SUM	LUMP SUM		LUMP SUM				
3	152009P	POLLUTION LIABILITY INSURANCE	LUMP SUM	LUMP SUM		LUMP SUM				
4	153003P	PROGRESS SCHEDULE	LUMP SUM	LUMP SUM		LUMP SUM				
5	153006P	PROGRESS SCHEDULE UPDATE	UNIT	10		10				
6	153012P	TRAINEES	HOUR	2,600		2,600				
7	154003P	MOBILIZATION	LUMP SUM	LUMP SUM		LUMP SUM				
8	155009M	FIELD OFFICE TYPE C SET UP	UNIT	1		1				
9	155027M	FIELD OFFICE TYPE C MAINTENANCE	MONTH	20		20				
10	155039M	TELEPHONE SERVICE	LUMP SUM	LUMP SUM		LUMP SUM				
11	157003M	CONSTRUCTION LAYOUT	LUMP SUM	LUMP SUM		LUMP SUM				
12	158006M	SILT FENCE	L.F.	2,389	2,389					C-2 456 C-3 895 C-4 1,038
13	158009M	HEAVY DUTY SILT FENCE, ORANGE	L.F.	388	388					C-3 388
14	158030M	INLET FILTER TYPE 2, 2' X 4'	UNIT	24	13	11				C-2 3 C-3 5 C-4 5
15	158033M	INLET FILTER TYPE 2, 4' X 4'	UNIT	1		1				
16	158063P	CONCRETE WASHOUT SYSTEM	LUMP SUM	LUMP SUM		LUMP SUM				
17	158072M	OIL ONLY EMERGENCY SPILL KIT, TYPE 1	UNIT	2		2				
18	158084M	EROSION CONTROL SEDIMENT REMOVAL	C.Y.	100		100				
19	159003M	BREAKAWAY BARRICADE	UNIT	70		70				
20	159006M	DRUM	UNIT	80		80				
21	159012M	CONSTRUCTION SIGNS	S.F.	2,388		2,388				
22	159018M	CONSTRUCTION IDENTIFICATION SIGN, 6' X 12'	UNIT	2		2				
23	159021P	CONSTRUCTION BARRIER CURB	L.F.	7,000		7,000				
24	159022P	CONSTRUCTION HALF BARRIER CURB	L.F.	350		350				
25	159027M	FLASHING ARROW BOARD, 4' X 8'	UNIT	3		3				
26	159030M	PORTABLE VARIABLE MESSAGE SIGN	UNIT	10		10				
27	159060M	TEMPORARY CRASH CUSHION, INERTIAL BARRIER SYSTEM, 16 MODULES	UNIT	4		4				
28	159123M	TEMPORARY PAVEMENT MARKING TAPE, 6"	L.F.	9,100		9,100				
29	159129M	TEMPORARY TRAFFIC STRIPES, 6"	L.F.	64,000		64,000				
30	159141M	TRAFFIC DIRECTOR, FLAGGER	HOUR	500		500				
31	159144M	EMERGENCY TOWING SERVICE	UNIT	25		25				
32	159163M	REAL-TIME WORK ZONE TRAFFIC SYSTEM	MONTH	19		19				
33	160003M	FUEL PRICE ADJUSTMENT	LUMP SUM	LUMP SUM		LUMP SUM				
34	160006M	ASPHALT PRICE ADJUSTMENT	LUMP SUM	LUMP SUM		LUMP SUM				
35	161003P	FINAL CLEANUP	LUMP SUM	LUMP SUM		LUMP SUM				
36	201003P	CLEARING SITE	LUMP SUM	LUMP SUM		LUMP SUM				
37	202006M	EXCAVATION, TEST PIT	C.Y.	5	5					ITS-1 5
38	202009P	EXCAVATION, UNCLASSIFIED	C.Y.	571	571					C-2 58 C-3 138 C-4 329 TC-7 46
39	202021P	REMOVAL OF PAVEMENT	S.Y.	1,473	1,473					C-2 203 C-3 473 C-4 679 TC-26 118
40	203009P	I-9 SOIL AGGREGATE	C.Y.	455	455					C-2 66 C-3 154 C-4 235
41	203021P	I-14 SOIL AGGREGATE	C.Y.	30	30					C-4 30
42	301006P	SUBBASE	C.Y.	634	634					C-2 74 C-3 219 C-4 341
43	302042P	DENSE-GRADED AGGREGATE BASE COURSE, 8" THICK	S.Y.	118	118					TC-7 118
44	304003P	CONCRETE BASE COURSE, 8" THICK	S.Y.	241	241					C-2 40 C-3 103 C-4 98
45	401009P	HMA MILLING, 3" OR LESS	S.Y.	1,170	1,170					C-2 254 C-3 375 C-4 541
46	401012P	HMA MILLING, MORE THAN 3" TO 6"	S.Y.	11,405	11,405					TC-6 3,190 TC-7 2,244 TC-8 3,382 TC-10 180 TC-11 2,409
47	401015P	CONCRETE MILLING	S.Y.	3,389	3,389					C-2 1,055 C-3 1,187 C-4 1,147
48	401063M	HOT MIX ASPHALT 12.5 H 76 SURFACE COURSE	TON	2,797	2,797					C-2 179 C-3 503 C-4 756 TC-6 376 TC-7 280 TC-8 397 TC-10 22 TC-11 284
49	401093M	HOT MIX ASPHALT 19 H 76 INTERMEDIATE COURSE	TON	1,239	1,239					C-2 7 C-3 648 C-4 584
50	401098M	HOT MIX ASPHALT 25 H 64 BASE COURSE	TON	2,709	2,709					TC-6 749 TC-7 557 TC-8 793 TC-10 43 TC-11 567
51	405003P	UNDERLAYER PREPARATION	S.Y.	2,250		2,250				
52	452006M	PARTIAL DEPTH CONCRETE PATCH	S.Y.	17		17				
53	602099M	RESET EXISTING CASTING	UNIT	13	13					C-2 2 C-3 6 C-4 5
54	602108M	SET INLET TYPE E, CASTING	UNIT	2	2					TC-7 2
55	602213M	CURB PIECE	UNIT	3	3					C-2 1 C-3 1 C-4 1
56	607012P	24" X 41" CONCRETE BARRIER CURB	L.F.	676	676					C-2 50 C-3 256 C-4 370
57	607018P	9" X 16" CONCRETE VERTICAL CURB	L.F.	681	681					C-2 100 C-3 426 C-4 155
58	608004P	NONVEGETATIVE SURFACE, POROUS HOT MIX ASPHALT, 4" THICK	S.Y.	1,919	1,919					C-2 257 C-3 815 C-4 847
59	609003M	BEAM GUIDE RAIL	L.F.	2,103	2,103					C-2 583 C-3 669 C-4 851
60	609021M	RUB RAIL	L.F.	765	765					C-2 393 C-3 142 C-4 230
61	609024M	FLARED GUIDE RAIL TERMINAL	UNIT	2	2					C-2 1 C-4 1
62	609027M	TANGENT GUIDE RAIL TERMINAL	UNIT	1	1					C-3 1
63	609039M	BEAM GUIDE RAIL ANCHORAGE	UNIT	4	4					C-2 1 C-3 2 C-4 1
64	609075M	REMOVAL OF BEAM GUIDE RAIL	L.F.	2,278	2,278					C-2 618 C-3 707 C-4 953
65	609078M	FLEXIBLE DELINEATORS, GUIDE RAIL MOUNTED	UNIT	40		40				
66	610006M	TRAFFIC STRIPES, LONG LIFE, EPOXY RESIN 6"	L.F.	34,000		34,000				
67	610007M	TRAFFIC STRIPES, LONG LIFE, EPOXY RESIN, 8"	L.F.	3,200		3,200				
68	610009M	TRAFFIC MARKINGS, THERMOPLASTIC	S.F.	70		70				
69	610012M	RPM, MONO-DIRECTIONAL, WHITE LENS	UNIT	450		450				
70	610018M	RPM, MONO-DIRECTIONAL, AMBER LENS	UNIT	120		120				
71	610024M	REMOVAL OF RPM	UNIT	170		170				
72	610027M	REMOVAL AND REPLACEMENT OF RPM LENS	UNIT	390		390				
73	610031M	FLEXIBLE DELINEATORS, BARRIER CURB MOUNTED	UNIT	40		40				
74	610033M	RUMBLE STRIP	L.F.	13,800		13,800				
75	610036M	REMOVAL OF TRAFFIC STRIPES	L.F.	37,000		37,000				
76	612003P	REGULATORY AND WARNING SIGN	S.F.	121		121				
77	612006P	GUIDE SIGN, TYPE GA, STEEL "U" POST SUPPORTS	S.F.	72		72				
78	612018P	GUIDE SIGN PANEL, TYPE GOX	S.F.	510	510					TSS-5 510
79	701008P	1 1/4" RIGID METALLIC CONDUIT	L.F.	370	370					HL-1 370
80	701015P	2" RIGID METALLIC CONDUIT	L.F.	193	193					ITS-1 193
81	701036P	1 1/4" FLEXIBLE METALLIC CONDUIT	L.F.	20	20					HL-1 20
82	701054P	4 - 1 1/4" FLEXIBLE NONMETALLIC CONDUIT	L.F.	480	480					ITS-1 480
83	701105M	8" X 8" X 6" METAL JUNCTION BOX	UNIT	1	1					HL-1 1
84	701108M	12" X 10" X 8" METAL JUNCTION BOX	UNIT	1	1					ITS-1 1
85	701192P	GROUND WIRE, NO. 8 AWG	L.F.	390	390					HL-1 390

EDQ-1
EDQ-2

Dewberry®
Bloomfield, N.J.

In Charge of
Designed by
Design Checked by
Detailed by
Detail Checked by

New Jersey Department Of Transportation

ESTIMATE-DISTRIBUTION OF QUANTITIES

PROJECT: ROUTE 80 BRIDGES OVER ROUTE 287 NORTHBOUND AND SMITH ROAD
CONTRACT NO: 043003714

DEWBERRY-GOODKIND, INC.
CERTIFICATE OF AUTHORIZATION NO. 24GA28047600
8/24/10
ANTHONY FULCO, P.E.
NJ PROFESSIONAL ENGINEER LICENSE NO. 24GE03993900

STATE	FEDERAL PROJECT NO.
N.J.	BR-080-5(094)

SEQ. NO.	ITEM NO.	DESCRIPTION	UNIT	CONTRACT QUANTITY	PLAN SHEET TOTALS	IF AND WHERE DIRECTED	AS-BUILT QUANTITY	BR-080-5(094) QUANTITY	STATE QUANTITY		DISTRIBUTION: PLAN SHEET QUANTITY														
86	701204P	MULTIPLE LIGHTING WIRE, NO. 10 AWG	L.F.	1,221	1,221						HL-1	1,221													
87	703021M	SIGN LIGHTING, STRUCTURE NO. 1	LUMP SUM	LUMP SUM		LUMP SUM																			
88	704003M	JUNCTION BOX ITS TYPE A	UNIT	2	2						ITS-1	2													
89	704033P	CONTROL CENTER SYSTEM, LOCATION NO. 1 - NTOC	LUMP SUM	LUMP SUM		LUMP SUM																			
90	704111M	TTS DETECTOR TYPE A	UNIT	4	4						ITS-1	4													
91	801006M	SELECTIVE THINNING	S.Y.	4,736	4,736						C-2	1,041	C-3	1,385	C-4	2,310									
92	804006P	TOPSOILING, 4" THICK	S.Y.	679	679						C-2	85	C-3	217	C-4	377									
93	806003P	FERTILIZING AND SEEDING, TYPE A	S.Y.	679	679						C-2	85	C-3	217	C-4	377									
94	806018P	FERTILIZING AND SEEDING, TYPE F	S.Y.	68		68																			
95	809003M	STRAW MULCHING	S.Y.	747	679	68					C-2	85	C-3	217	C-4	377									

Dewberry®
Bloomfield, N.J.

In Charge of
Designed by
Design Checked by
Detailed by
Detail Checked by

New Jersey Department Of Transportation

ESTIMATE-DISTRIBUTION OF QUANTITIES

PROJECT: ROUTE 80 BRIDGES OVER ROUTE 287 NORTHBOUND AND SMITH ROAD
CONTRACT NO: 043003714

EDQ-2
EDQ-2

DEWBERRY-GOODKIND, INC.
CERTIFICATE OF AUTHORIZATION NO. 24GA28047600

8/24/10
ANTHONY FULCO, P.E.
NJ PROFESSIONAL ENGINEER LICENSE NO. 24GE03993900

apisani 8/24/2010 8:58:30 AM OceTDS700-BW.plt Default 30-scale 3056-REDECKING-Route80-287-V8 Q:\3056\Redecking\CAD\Civil\PLANS\ACEQ305602.dgn

STATE	FEDERAL PROJECT NO.
N.J.	BR-080-5(094)

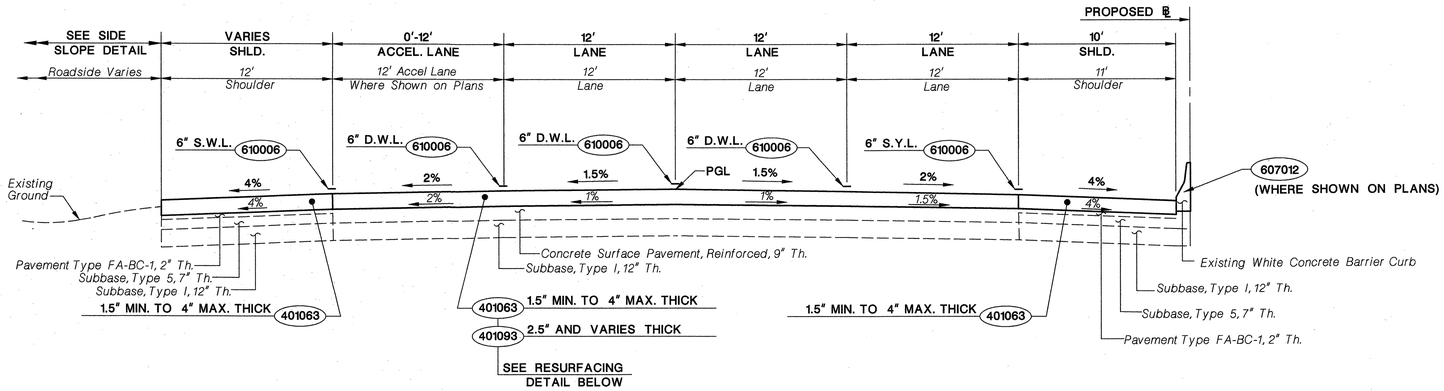

ROUTE 80 WESTBOUND

STA. 213+60 TO STA. 228+40

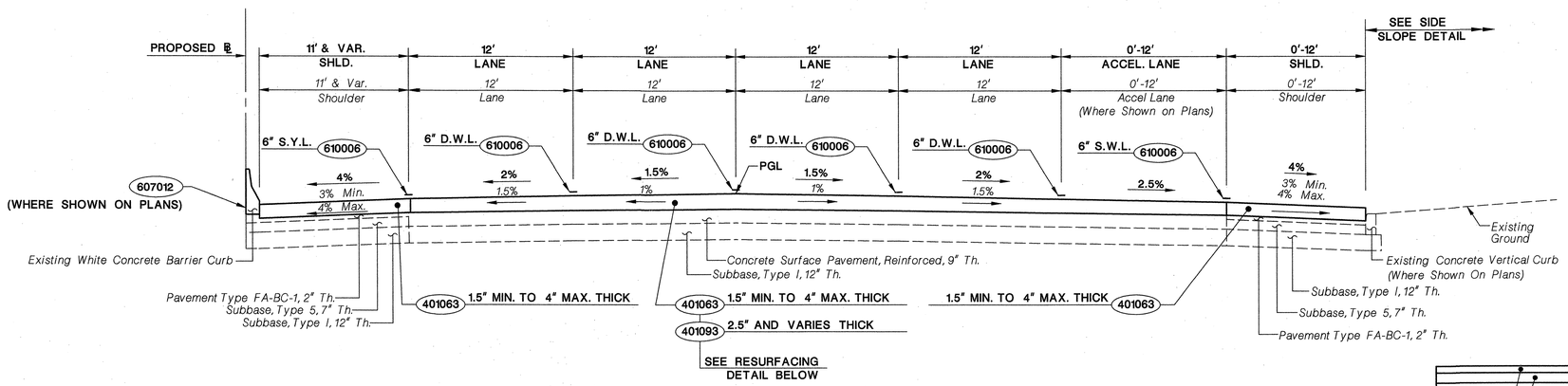

ROUTE 80 EASTBOUND

STA. 213+60 TO STA. 228+40

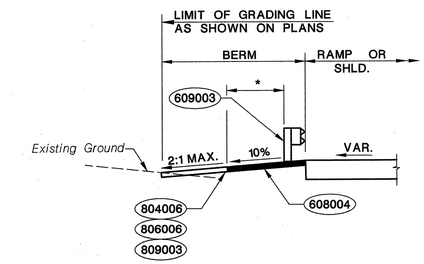

SIDE SLOPE DETAIL UMBRELLA SECTION

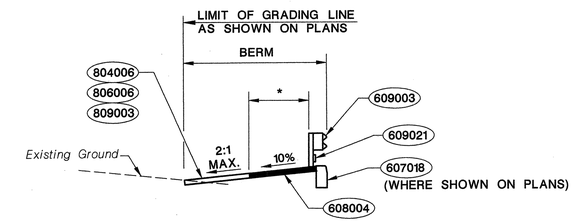

SIDE SLOPE DETAIL CURB SECTION

*LIMITS FOR WIDTH OF NVS (WHERE SHOWN ON PLANS)
4' - ROUTE 80 EB STA. 211+10 TO STA. 223+90
3' - ROUTE 80 EB STA. 225+38 TO STA. 228+12
4' - ROUTE 80 WB STA. 212+59 TO STA. 216+63
3' - ROUTE 80 WB STA. 222+22 TO STA. 228+78

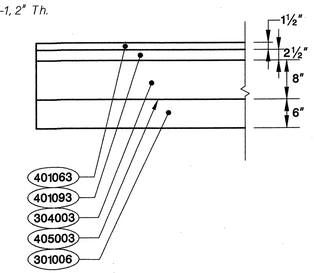

PAVEMENT SECTION AND EDGE REPAIR

(N.T.S.)

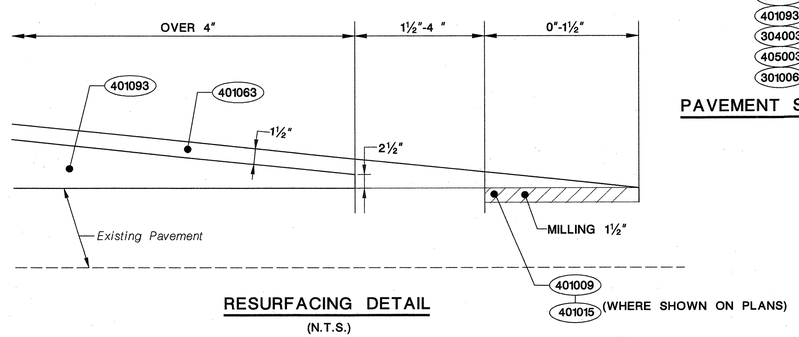

RESURFACING DETAIL

(N.T.S.)

	PROPOSED MATERIALS
ITEM NO.	DESCRIPTION
301006P	SUBBASE
304003P	CONCRETE BASE COURSE, 8" THICK
401009P	HMA MILLING, 3" OR LESS
401015P	CONCRETE MILLING
401063M	HOT MIX ASPHALT 12.5 H 76 SURFACE COURSE
401093M	HOT MIX ASPHALT 19 H 76 INTERMEDIATE COURSE
405003P	UNDERLAYER PREPARATION
607012P	CONCRETE BARRIER CURB
607018P	9" X 16" CONCRETE VERTICAL CURB
608004P	NONVEGETATIVE SURFACE, POROUS HOT MIX ASPHALT, 4" THICK
609003M	BEAM GUIDE RAIL
609021M	RUB RAIL
610006M	TRAFFIC STRIPES, LONG LIFE, EPOXY RESIN 6"
804006P	TOPSOILING, 4" THICK
806006P	FERTILIZING AND SEEDING, TYPE A-3
809003M	STRAW MULCHING

LEGEND

D.W.L. - DASHED WHITE LINE
S.W.L. - SOLID WHITE LINE
S.Y.L. - SOLID YELLOW LINE

TS-1 / TS-1

NEW JERSEY DEPARTMENT OF TRANSPORTATION

TYPICAL SECTIONS

ROUTE 80 BRIDGES OVER ROUTE 287
NORTHBOUND AND SMITH ROAD
CONTRACT NO. 043003714

DEWBERRY-GOODKIND, INC.
CERTIFICATE OF AUTHORIZATION NO. 24GA28047600
ANTHONY FULCO, P.E. 8/24/10
NJ PROFESSIONAL ENGINEER LICENSE NO. 24GE03993900

Dewberry-Goodkind, Inc.
Bloomfield, N.J.

STATE	FEDERAL PROJECT NO.
N.J.	BR-080-5(094)

TOWNSHIP OF PARSIPPANY - TROY HILLS

1"=100'

100 0 100 200

COUNTY OF MORRIS

BEGIN PROJECT
FEDERAL PROJECT
NO. BR-080-5(094)
℄ STA. 201+75

END PROJECT
FEDERAL PROJECT
NO. BR-080-5(094)
℄ STA. 236+68

N.J. Plane Coordinate System NAD83

PARSIPPANY ROAD

SMITH ROAD

SMITH ROAD ℄

ROUTE 80 ℄

ROUTE 287 NB ℄

ROUTE 80 WB

ROUTE 80 EB

I-287 SB

I-287 NB

ROUTE 287 NB

RAMP J

RAMP G

RAMP I

RAMP D

RAMP A

SLIP RAMP

187 190 195 200 205 210 220 225 230 235 240 245

MATCH LINE STA. 216+00

SHEET TSS-1

SHEET TSS-2

SHEET TSS-3

SHEET C-2
G-1
TSS-4

SHEET C-3
G-2
E-1
ITS-1
TSS-5

SHEET C-4
G-3
TSS-6

SHEET TSS-7

SHEET TSS-8

LEGEND:

SHEET C - CONSTRUCTION PLANS
SHEET G - GRADES
SHEET E - ELECTRICAL PLANS
SHEET ITS - ITS PLANS
SHEET TSS - TRAFFIC STRIPING PLANS

PSI-1
PSI-1

NEW JERSEY DEPARTMENT OF TRANSPORTATION

PLAN SHEET INDEX

ROUTE 80 BRIDGES OVER ROUTE 287
NORTHBOUND AND SMITH ROAD
CONTRACT NO. 043003714

DEWBERRY-GOODKIND, INC.
CERTIFICATE OF AUTHORIZATION NO. 24GA28047600

8/24/10

ANTHONY FULCO, P.E.
NJ PROFESSIONAL ENGINEER LICENSE NO. 24GE03993900

Dewberry-Goodkind, Inc.
Bloomfield, N.J.

apisani 8/24/2010 8:58:47 AM OceTDS700-BW.plt 30-scale 3056-REDECKING-Route80-287-V8 Q:\3056\Redecking\CAD\Civil\PLANS\ACPI305601.dgn

NEW JERSEY DEPARTMENT OF TRANSPORTATION STANDARD LEGEND

LINEAR FEATURES

Existing	Proposed	
W	W	Water Main (Size)
G	G	Gas Main (Size)
T	T	Telephone Conduit
E	E	Electric Conduit (Highway or Utility)
CTV	CTV	Cable TV
FO	FO	Fiber Optic
ITS	ITS	Intelligent Transportation System (Wires & Cables)
(Size & Type) (Over 30" - Draw to Size)	(SIZE & TYPE)	Sanitary Sewers or Storm Drains
		Pavements (Concrete or Bituminous)
		Shoulders
		Curbs
(F) (C)	(C) (F)	Slopes (Cut & Fill)
℄	℄	Base Line
		Twp., City, County Lines
Existing R.O.W. Line	PROPOSED R.O.W. LINE	Right of Way Lines (Access Permitted)
Existing R.O.W. & No Access Line	PROP. R.O.W. & NO ACCESS LINE	Right of Way Lines (No Access)
		Easements
℄		Property Line
Z		Common Owner Line
		Fence (Size & Type)
		Reset Fence
		Beam Guide Rail
		Reset Beam Guide Rail
		Noise Walls
(Uplands) (Wetlands)	(UPLANDS) (WETLANDS)	Wetland Limit Line
		Silt Fence
Ditch	(SIZE) DITCH	Ditches
		Railroad Tracks
		Tree Line

TOPOGRAPHICAL FEATURES

Existing	Proposed	
		Inlets (Label Type)
"ES"	"ES"	Inlets (Type ES)
		Manholes (Label Type or Utility)
		Reset (Inlets or Manholes)
		Reconstructed (Inlets or Manholes)
		Cast Iron Extension (Frame or Ring) (Inlet or Manhole)
		New Manhole Casting, Square Frame, Circular Cover
		New Casting (Inlets or Manholes)
		R.C. End Section or C.M. End Section Headwall
		Headwalls
		Headwalls & Aprons
WV	WV	Water Valves
	WV	Reset Water Valves
GV	GV	Gas Valves
	GV	Reset Gas Valves
	HYD.	Hydrants
		Reset Hydrants
		Utility Pole (Type & Number)
	TEMP	Temporary Utility Pole
		Traffic Signal
	JB	Junction Box
F	F	Fiber Optic Junction Box
		Junction Box Foundation
		Signs
		Guy Wire
		Vertical Panels
		Camera (With Blind Spot)
DMS	DMS	Dynamic Message Sign (DMS)

		Vertical Panels
		Guide Rail End Terminals
		Beam Guide Rail Anchorages
Mon.		Monuments
		ROW Monument (ROW Control Points)
TP-	TP-	Test Pit
B-	B-	Borings (Boring Number)
		Deciduous Tree (Size, Kind)
		Evergreens
		Bush
		Hedges
		Swamp

DOUBLE REFERENCE CODES

EDQ -	ESTIMATE & DISTRIBUTION OF QUANTITIES - ROADWAY
TS -	TYPICAL SECTIONS
PSI -	PLAN SHEET INDEX
C -	CONSTRUCTION PLANS
P -	PROFILES
T -	TIES
G -	GRADES
TC -	TRAFFIC CONTROL (AND STAGING PLANS)
ITS -	INTELLIGENT TRANSPORTATION SYSTEM PLANS
TSS -	TRAFFIC SIGNING AND STRIPING PLANS
DTL -	CONSTRUCTION DETAILS
EQB -	ESTIMATE OF QUANTITIES - BRIDGE
B -	BRIDGE PLANS

MISCELLANEOUS SYMBOLS

- Items With No Alternate
- Milling
- Removal of Concrete Base Course & Concrete Surface Courses
- Approach Slab
- PROFILE — LEVEL LINE — + % / - %
- High Point
- Low Point
- Proposed Inlet With Inlet Sediment Trap
- Proposed Inlet With Inlet Filter
- Existing Inlet With Inlet Filter
- B.M. Bench Mark
- 1 Curve Number
- (UPLANDS) (WETLANDS) Tidelands Claims Line
- Snow Fence
- 100 Yr. Floodplain Limit
- Riprap Or Gabion Slope Protection
- Wetlands

N.J. Plane Coordinate System
NAD83

North Arrow To Be Used On Standard Construction Sheets Where Bearings Refer To N. J. Plane Coordinate System

C-1 / C-4

ABBREVIATIONS USED IN THIS CONTRACT

AH., BK.	AHEAD, BACK
AWS	ADVANCE WARNING SIGN
℄	BASELINE
B.M.	BENCH MARK
BGRA	BEAM GUIDE RAIL ANCHORAGE
BIT.	BITUMINOUS
BLDG.	BUILDING
℄	CENTERLINE
CLF	CHAIN LINK FENCE
CIP	CAST IRON PIPE
CMP	CORRUGATED METAL PIPE
CONC.	CONCRETE
C.R.T.	CONTROLLED RELEASE TERMINAL
CT	CURB TRANSITION
CULV.	CULVERT
DIA.	DIAMETER
D.C.	DEPRESSED CURB
DE	DITCH EXCAVATION
DH	DRILL HOLE
DWLG.	DWELLING
DWY.	DRIVEWAY
E.B., W.B.	EASTBOUND, WESTBOUND
N.B., S.B.	NORTHBOUND, SOUTHBOUND
EL	ELEVATION
E.T.	EXTRUDER TERMINAL
EXIST.	EXISTING
GR.	GRATE
HT.	HEIGHT
HW	HEADWALL
HYD.	HYDRANT
INV.	INVERT
IP	IRON PIN
JB	JUNCTION BOX
LT., RT.	LEFT, RIGHT
L.O.P.	LIMIT OF PAVEMENT (PAVING)
L.O.M.	LIMIT OF MILLING
MB	MAILBOX
M.P.	MILE POST
MAX.	MAXIMUM
MIN.	MINIMUM
NO.	NUMBER
N.T.S.	NOT TO SCALE
NVS	NON-VEGETATIVE SURFACE
PAV'T.	PAVEMENT
PERF.	PERFORATED
P.G.L.	PROFILE GRADE LINE
ℙ	PROPERTY LINE
PK	PARKER KAYLON MASONRY NAIL
POC	POINT ON CURVE
POL	POINT ON LINE
POT	POINT ON TANGENT
PRC	POINT OF REVERSE CURVE
PROP.	PROPOSED
PT	POINT OF TANGENCY
PVC	POLYVINYL CHLORIDE PIPE
PC	POINT OF VERTICAL CURVATURE
PVI	POINT OF VERTICAL INTERSECTION
PVT	POINT OF VERTICAL TANGENCY
R	RADIUS
RIM	RIM ELEVATION
RET.	RETAINING WALL
RCP	REINFORCED CONCRETE PIPE
RMC	RIGID METALLIC CONDUIT
RNMC	RIGID NON-METALLIC CONDUIT
ROW	RIGHT OF WAY
RNDG.	ROUNDING
RTE.	ROUTE
SAN.	SANITARY
SDWK.	SIDEWALK
S.H.D.	STATE HIGHWAY DEPARTMENT
SHLD.	SHOULDER
ℚ	SURVEY LINE
S.O.D.	SUBBASE OUTLET DRAIN
S.R.T.	SLOTTED RAIL TERMINAL
STY.	STORY
T	TANGENT
T.B.A.	TO BE ABANDONED
T.B.R.	TO BE REMOVED
TEL.	TELEPHONE
TEMP.	TEMPORARY
TH.	THICK
TS	TRAFFIC SIGNAL
TYP.	TYPICAL
U.D.	UNDERDRAIN
UP	UTILITY POLE
VAR.	VARIABLE, VARIES
W.C.V.C.	WHITE CONCRETE VERTICAL CURB
W.M.	WATER METER
X-SECT	CROSS SECTION

Dewberry®
Bloomfield, N.J.

In Charge of
Designed by
Design Checked by
Drawn by
Detail Checked by

NEW JERSEY DEPARTMENT OF TRANSPORTATION

CONSTRUCTION PLAN

ROUTE 80 BRIDGES OVER ROUTE 287
NORTHBOUND AND SMITH ROAD
CONTRACT NO. 043003714

DEWBERRY-GOODKIND, INC.
CERTIFICATE OF AUTHORIZATION NO. 24G28047600
ANTHONY FULCO, P.E. 8/24/10
NEW JERSEY PROFESSIONAL ENGINEER LICENSE NO. 24GE03993900

6 / 129

STATE	FEDERAL PROJECT NO.
N.J.	BR-080-5(094)

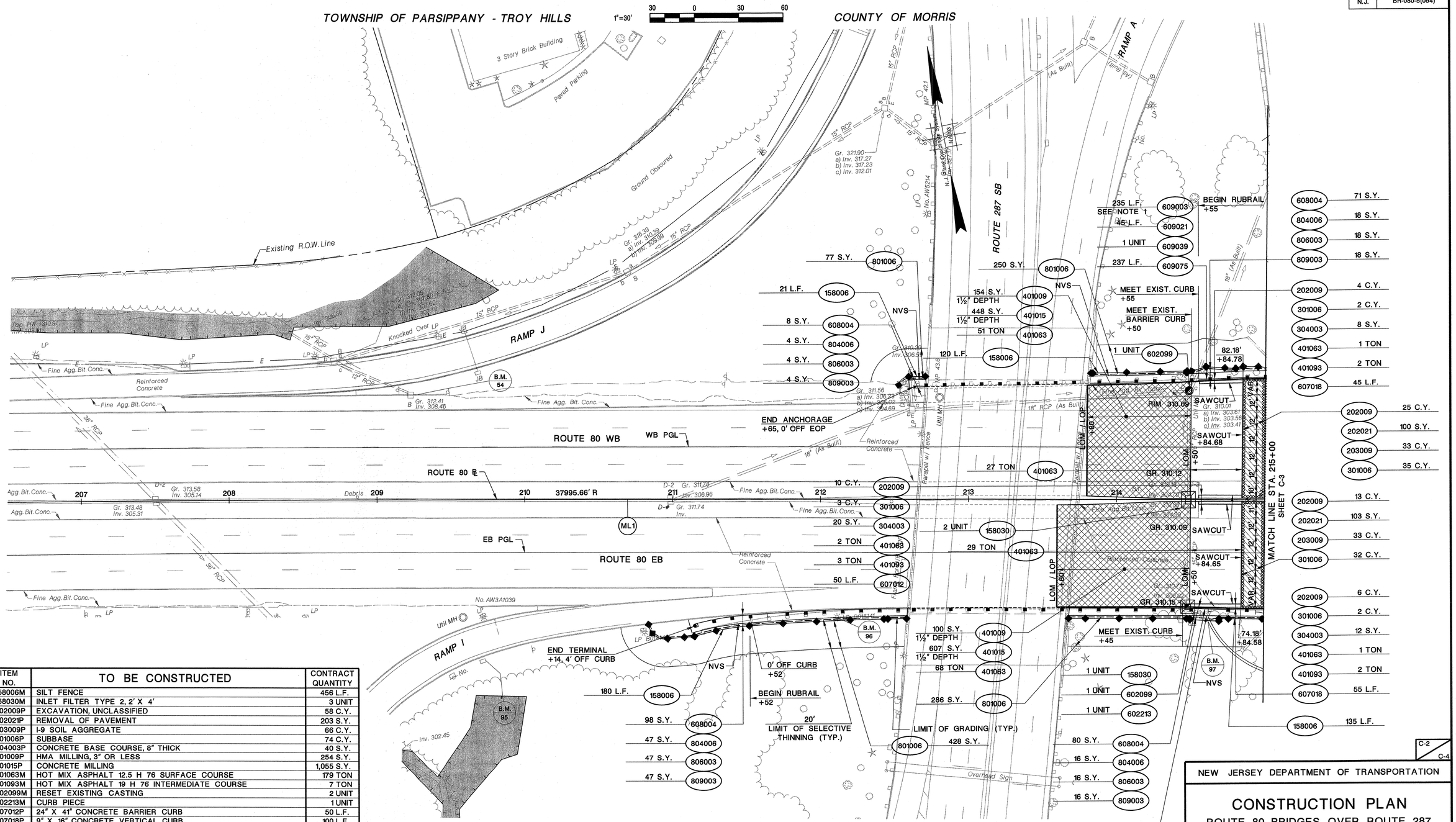

ITEM NO.	TO BE CONSTRUCTED	CONTRACT QUANTITY
158006M	SILT FENCE	456 L.F.
158030M	INLET FILTER TYPE 2, 2' X 4'	3 UNIT
202009P	EXCAVATION, UNCLASSIFIED	58 C.Y.
202021P	REMOVAL OF PAVEMENT	203 S.Y.
203009P	I-9 SOIL AGGREGATE	66 C.Y.
301006P	SUBBASE	74 C.Y.
304003P	CONCRETE BASE COURSE, 8" THICK	40 S.Y.
401009P	HMA MILLING, 3" OR LESS	254 S.Y.
401015P	CONCRETE MILLING	1,055 S.Y.
401063M	HOT MIX ASPHALT 12.5 H 76 SURFACE COURSE	179 TON
401093M	HOT MIX ASPHALT 19 H 76 INTERMEDIATE COURSE	7 TON
602099M	RESET EXISTING CASTING	2 UNIT
602213M	CURB PIECE	1 UNIT
607012P	24" X 41" CONCRETE BARRIER CURB	50 L.F.
607018P	9" X 16" CONCRETE VERTICAL CURB	100 L.F.
608004P	NONVEGETATIVE SURFACE, POROUS HOT MIX ASPHALT, 4" THICK	257 S.Y.
609003M	BEAM GUIDE RAIL	583 L.F.
609021M	RUB RAIL	393 L.F.
609024M	FLARED GUIDE RAIL TERMINAL	1 UNIT
609039M	BEAM GUIDE RAIL ANCHORAGE	1 UNIT
609075M	REMOVAL OF BEAM GUIDE RAIL	618 L.F.
801006M	SELECTIVE THINNING	1,041 S.Y.
804006P	TOPSOILING, 4" THICK	85 S.Y.
806003P	FERTILIZING AND SEEDING, TYPE A	85 S.Y.
809003M	STRAW MULCHING	85 S.Y.

B.M. 54 X-CUT ON SE CORNER OF TYPE B INLET, RTE. 80 ℄ STA. 209+25, 69± LT., ELEV. 312.49
B.M. 95 BOX CUT ON NE CORNER OF JB BO13169, RAMP I ℄ STA. 9+92.65, 2± RT., ELEV. 311.45
B.M. 96 BOX CUT IN NE CORNER OF JB LP #D016141, RTE. 80 ℄ STA. 212+12, 81± RT., ELEV. 312.27
B.M. 97 BOX CUT IN N SIDE OF FIBER OPTIC MH ON RT. 80 E, BETWEEN RT. 287 N & S, RTE. 80 ℄ STA. 214+64, 80± RT., ELEV. 311.32

NOTE:
1. MAINTAIN EXISTING GUIDERAIL POSTS ON ROUTE 80 EB FROM STA. 212+55 TO STA. 213+75 AND ROUTE 80 WB FROM STA. 212+65 TO STA. 213+85. REPLACE BEAM RAIL AND SPACERS THROUGH THESE SECTIONS. PAYMENT TO BE INCLUDED IN ITEM NUMBER 609003.

NEW JERSEY DEPARTMENT OF TRANSPORTATION

CONSTRUCTION PLAN

ROUTE 80 BRIDGES OVER ROUTE 287
NORTHBOUND AND SMITH ROAD
CONTRACT NO. 043003714

DEWBERRY-GOODKIND, INC.
CERTIFICATE OF AUTHORIZATION NO. 24GA28047600
ANTHONY FULCO, P.E.
NJ PROFESSIONAL ENGINEER LICENSE NO. 24GE03993900

Dewberry-Goodkind, Inc.
Bloomfield, N.J.

apisani 8/24/2010 8:59:00 AM OceTDS700-BW.plt 30-scale 3056-REDECKING-Route80-287-V8 Q:\3056\Redecking\CAD\Civil\PLANS\ACCP305601.dgn

STATE	FEDERAL PROJECT NO.
N.J.	BR-080-5(094)

ITEM NO.	TO BE CONSTRUCTED	CONTRACT QUANTITY
158006M	SILT FENCE	895 L.F.
158009M	HEAVY DUTY SILT FENCE, ORANGE	388 L.F.
158030M	INLET FILTER TYPE 2, 2' X 4'	5 UNIT
202009P	EXCAVATION, UNCLASSIFIED	138 C.Y.
202021P	REMOVAL OF PAVEMENT	473 S.Y.
203009P	I-9 SOIL AGGREGATE	154 C.Y.
301006P	SUBBASE	219 C.Y.
304003P	CONCRETE BASE COURSE, 8" THICK	103 S.Y.
401009P	HMA MILLING, 3" OR LESS	375 S.Y.
401015P	CONCRETE MILLING	1,187 S.Y.
401063M	HOT MIX ASPHALT 12.5 H 76 SURFACE COURSE	503 TON
401093M	HOT MIX ASPHALT 19 H 76 INTERMEDIATE COURSE	648 TON
602099M	RESET EXISTING CASTING	6 UNIT
602213M	CURB PIECE	1 UNIT
607012P	24" X 41" CONCRETE BARRIER CURB	256 L.F.
607018P	9" X 16" CONCRETE VERTICAL CURB	426 L.F.
608004P	NONVEGETATIVE SURFACE, POROUS HOT MIX ASPHALT, 4" THICK	815 S.Y.
609003M	BEAM GUIDE RAIL	669 L.F.
609021M	RUB RAIL	142 L.F.
609027M	TANGENT GUIDE RAIL TERMINAL	1 UNIT
609039M	BEAM GUIDE RAIL ANCHORAGE	2 UNIT
609075M	REMOVAL OF BEAM GUIDE RAIL	707 L.F.
801006M	SELECTIVE THINNING	1,385 S.Y.
804006P	TOPSOILING, 4" THICK	217 S.Y.
806003P	FERTILIZING AND SEEDING, TYPE A	217 S.Y.
809003M	STRAW MULCHING	217 S.Y.

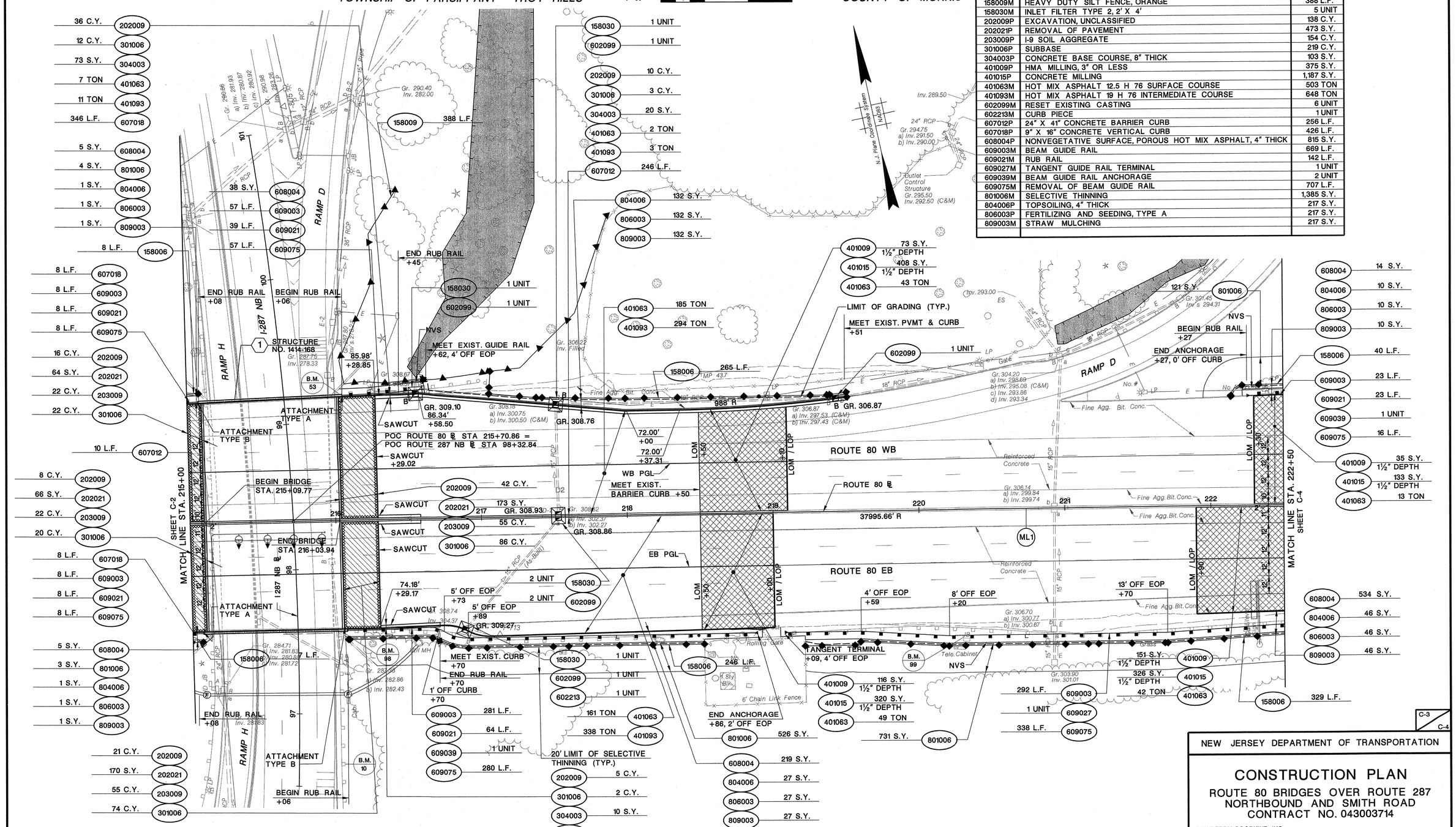

B.M. 10 X-CUT IN GUIDE RAIL POST, I-287 NB ℄ STA. 96+65, 31± RT., ELEV. 290.52
B.M. 53 X-CUT ON NE WINGWALL, RTE. 80 WB ℄ STA. 216+05, 88.± LT., ELEV. 310.32
B.M. 98 BOX CUT ON SE WINGWALL, RTE. 80 EB ℄ STA. 216+05, 76± RT., ELEV. 310.70
B.M. 99 BOX CUT IN NW CORNER OF CONC AROUND JB, RTE. 80 EB ℄ STA. 220+29, 88± RT., ELEV. 306.54

NEW JERSEY DEPARTMENT OF TRANSPORTATION

CONSTRUCTION PLAN

ROUTE 80 BRIDGES OVER ROUTE 287
NORTHBOUND AND SMITH ROAD
CONTRACT NO. 043003714

DEWBERRY-GOODKIND, INC.
CERTIFICATE OF AUTHORIZATION NO. 24GA28047600
ANTHONY FULCO, P.E.
NJ PROFESSIONAL ENGINEER LICENSE NO. 24GE03993900

Dewberry-Goodkind, Inc.
Bloomfield, N.J.

apisani 8/24/2010 8:59:08 AM OceTDS700-BW.plt 30-scale 3056-REDECKING-Route80-287-V8 Q:\3056\Redecking\CAD\Civil\PLANS\ACCP305602.dgn

STATE	FEDERAL PROJECT NO.
N.J.	BR-080-5(094)

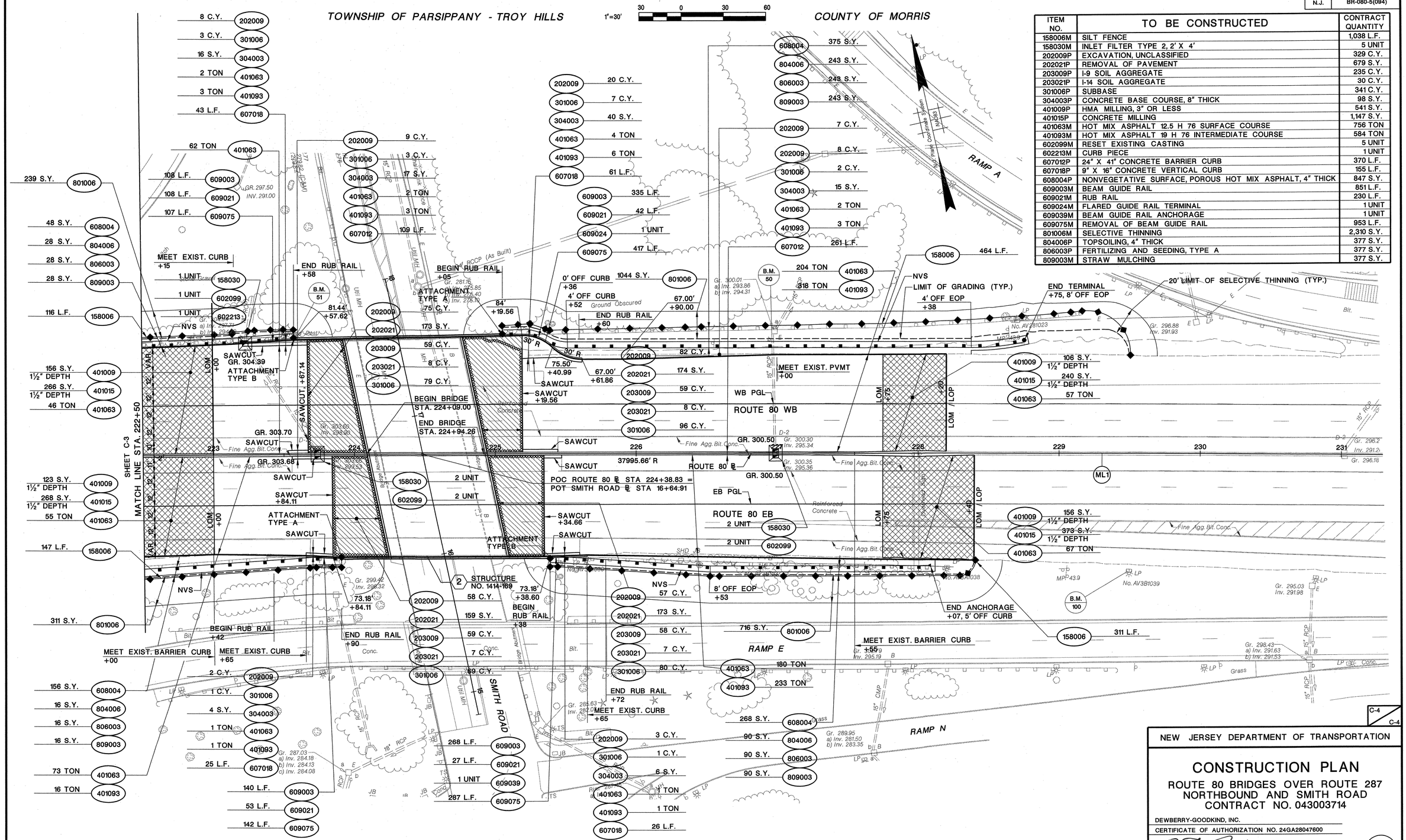

ITEM NO.	TO BE CONSTRUCTED	CONTRACT QUANTITY
158006M	SILT FENCE	1,038 L.F.
158030M	INLET FILTER TYPE 2, 2' X 4'	5 UNIT
202009P	EXCAVATION, UNCLASSIFIED	329 C.Y.
202021P	REMOVAL OF PAVEMENT	679 S.Y.
203009P	I-9 SOIL AGGREGATE	235 C.Y.
203021P	I-14 SOIL AGGREGATE	30 C.Y.
301006P	SUBBASE	341 C.Y.
304003P	CONCRETE BASE COURSE, 8" THICK	98 S.Y.
401009P	HMA MILLING, 3" OR LESS	541 S.Y.
401015P	CONCRETE MILLING	1,147 S.Y.
401063M	HOT MIX ASPHALT 12.5 H 76 SURFACE COURSE	756 TON
401093M	HOT MIX ASPHALT 19 H 76 INTERMEDIATE COURSE	584 TON
602099M	RESET EXISTING CASTING	5 UNIT
602213M	CURB PIECE	1 UNIT
607012P	24" X 41" CONCRETE BARRIER CURB	370 L.F.
607018P	9" X 16" CONCRETE VERTICAL CURB	155 L.F.
608004P	NONVEGETATIVE SURFACE, POROUS HOT MIX ASPHALT, 4" THICK	847 S.Y.
609003M	BEAM GUIDE RAIL	851 L.F.
609021M	RUB RAIL	230 L.F.
609024M	FLARED GUIDE RAIL TERMINAL	1 UNIT
609039M	BEAM GUIDE RAIL ANCHORAGE	1 UNIT
609075M	REMOVAL OF BEAM GUIDE RAIL	953 L.F.
801006M	SELECTIVE THINNING	2,310 S.Y.
804006P	TOPSOILING, 4" THICK	377 S.Y.
806003P	FERTILIZING AND SEEDING, TYPE A	377 S.Y.
809003M	STRAW MULCHING	377 S.Y.

B.M. 51-BOX CUT ON NW BRIDGE ABUTMENT,ON TOP OF CURB, RTE. 80 ℄ STA. 223+58, 82' LT., ELEV. 304.55
B.M. 50-X-CUT ON SW CORNER OF TYPE E INLET, RTE. 80 ℄, STA. 226+96, 85' LT., ELEV. 299.98
B.M. 100-BOX CUT IN NE CORNER OF CONC. /JB, LP #AV3B1039, RTE. 80 ℄, STA. 229+48, 85' RT., ELEV. 297.29

NEW JERSEY DEPARTMENT OF TRANSPORTATION

CONSTRUCTION PLAN

ROUTE 80 BRIDGES OVER ROUTE 287 NORTHBOUND AND SMITH ROAD CONTRACT NO. 043003714

DEWBERRY-GOODKIND, INC.
CERTIFICATE OF AUTHORIZATION NO. 24GA28047600

ANTHONY FULCO, P.E.
NJ PROFESSIONAL ENGINEER LICENSE NO. 24GE03993900

9
129

Dewberry-Goodkind, Inc.
Bloomfield, N.J.

apisani 8/24/2010 8:59:15 AM OceTDS700-BW.plt 30-scale 3056-REDECKING-Route80-287-V8 Q:\3056\Redecking\CAD\Civil\PLANS\ACCP305603.dgn

STATE	FEDERAL PROJECT NO.
N.J.	BR-080-5(094)

1. SENSITIVE AREA: DO NOT ENCROACH UPON OR STORE ANY EQUIPMENT/VEHICLE/MATERIALS IN WETLANDS/TRANSITION AREAS/STATE OPEN WATER AREAS/FLOODPLAINS BEYOND THE HEAVY DUTY ORANGE SILT FENCE OR CAUTION FENCE AS SHOWN ON THE PLANS. ADHERE TO THE LOCATIONS OF THE SILT FENCE AND CAUTION FENCE. THE ENVIRONMENTAL PERMITS DO NOT ALLOW FOR ENCROACHMENT BEYOND THE FENCING LOCATIONS. IN ADDITION, DO NOT LOCATE STOCKPILES, VEHICLES, CONCRETE WASHOUT FACILITIES, AND/OR EQUIPMENT WITHIN 50 FEET, IF FEASIBLE, OF A SLOPE, DRAINAGE FACILITY, WATERBODY, WETLAND, FLOODPLAIN, OR OTHER ENVIRONMENTALLY SENSITIVE AREA. PROTECT STOCKPILE BASES WITH A HAY BALE BARRIER OR SILT FENCE.

2. PERFORM THE WORK IN ACCORDANCE WITH THE NJDOT STANDARDS FOR SOIL EROSION AND SEDIMENT CONTROL AND AS SPECIFIED IN THE CURRENT NJDOT SPECIFICATIONS.

3. ALL SOIL EROSION AND SEDIMENT CONTROL PRACTICES AND CAUTION FENCE ARE TO BE INSTALLED PRIOR TO ANY MAJOR SOIL DISTURBANCE OR IN THEIR PROPER SEQUENCE AND MAINTAINED UNTIL PERMANENT PROTECTION IS ESTABLISHED. CORRECT NON-FUNCTIONING SOIL EROSION AND SEDIMENT CONTROL MEASURES AND SITE WASTE CONTROL MEASURES WITHIN 24 HOURS AND AS SPECIFIED IN SECTION 158 OF THE SPECIFICATIONS. ALL ORANGE FENCE WILL REMAIN IN PLACE FOR THE DURATION OF CONSTRUCTION. THE COLOR OF THE SILT FENCE INDICATED ON THE PLANS MUST BE ADHERED TO. BLACK SILT FENCE CAN NOT BE SUBSTITUTED FOR ORANGE AND VICE VERSA.

4. THE CONTRACTOR IS NOT ALLOWED TO DROP WASTE CONCRETE, DEBRIS, OR OTHER CONSTRUCTION MATERIAL INTO WATERBODIES, UNIMPACTED WETLANDS/TRANSITION AREAS, OR OTHER ENVIRONMENTALLY SENSITIVE AREAS. TEMPORARY SHIELDING IS TO BE USED DURING DEMOLITION OF BRIDGES OVER THESE ENVIRONMENTALLY SENSITIVE AREAS TO CATCH DEBRIS. TEMPORARY SHIELDING IS TO BE DESIGNED TO PREVENT FINES, AS WELL AS LARGER PIECES OF DEBRIS, FROM ENTERING THE WATERBODY. IF DEBRIS DOES ACCIDENTALLY FALL INTO ANY OF THESE ENVIRONMENTALLY SENSITIVE AREAS, PROMPTLY REMOVE IT. THE BUREAU OF LANDSCAPE ARCHITECTURE AND ENVIRONMENTAL SOLUTIONS' ENVIRONMENTAL TEAM SHOULD BE CONTACTED FOR GUIDANCE IF RETRIEVAL OF DEBRIS MAY POTENTIALLY CAUSE DAMAGE TO THE ENVIRONMENTALLY SENSITIVE AREA.

5. PROTECT ALL DRAINAGE SYSTEM INLETS (NEW AND EXISTING) FROM SILTATION.

6. STABILIZE STORM DRAINAGE OUTLETS BEFORE THE DISCHARGE POINTS BECOME OPERATIONAL.

7. DUST/DIRT CONTROL/TRACKING: EMPLOY CONSTRUCTION METHODS THAT MINIMIZE AIRBORNE DUST AND PREVENT SOILS AND OTHER MATERIALS FROM BEING DEPOSITED ON EXISTING ROADWAYS. APPLY WATER OR OTHER RE APPROVED MATERIALS TO UNPAVED AREAS TO CONTROL DUST CAUSED BY HAULING OR OTHER CONSTRUCTION OPERATIONS. IMMEDIATELY REMOVE ALL SOIL OR OTHER MATERIALS WASHED, DROPPED, SPILLED OR TRACKED OUTSIDE OF THE LIMIT OF DISTURBANCE OR ONTO PUBLIC RIGHT-OF-WAY AND DISPOSE OF IT AS SPECIFIED IN 202.03.07.B OF THE SPECIFICATIONS. PAVED ROADS AND DRIVEWAYS MUST BE KEPT CLEAN AT ALL TIMES.

8. DURING SAWCUTTING, MILLING, CORE SAMPLING, INSTALLING LONGITUDINAL JOINT TIES, DIAMOND GRINDING, SLIP-FORM PAVING, PLACEMENT OF PERMANENT ROADWAY REFLECTIVE MARKERS, AND SIMILAR OPERATIONS THAT COULD CAUSE DUST, SLURRY, AND STORMWATER RUNOFF PROBLEMS, DO NOT CREATE A DUST HAZARD AND ENSURE THAT DEBRIS AND SLURRY DO NOT ENTER INLETS OR ENVIRONMENTALLY SENSITIVE AREAS, SUCH AS WETLANDS AND WATERBODIES. THIS INCLUDES, BUT IS NOT LIMITED TO, BRIDGE DECK, APPROACH SLAB, AND TRANSITION SLAB SAWCUTTING. PROVIDE FOR CONTINUOUS REMOVAL OF GRINDING RESIDUE FROM THE PAVEMENT SURFACE BEFORE IT IS BLOWN ABOUT BY TRAFFIC MOTION, WIND, OR PRECIPITATION. CONTAIN THE CONCRETE SLURRY AND DISPOSE OF IT AS SPECIFIED IN 202.03.07.B OF THE SPECIFICATIONS. THE CONTRACTOR MAY MANAGE THE SLURRY IN A CONCRETE WASHOUT FACILITY IF THAT ITEM IS PART OF THE CONTRACT.

9. EXCAVATED MATERIAL THAT WILL NOT BE USED AS BACKFILL MUST BE DISPOSED OF IN A LAWFUL MANNER OUTSIDE OF ANY REGULATED FLOODPLAIN, OPEN WATER, WETLAND, OR TRANSITION AREA, AND IN SUCH A WAY AS NOT TO INTERFERE WITH THE POSITIVE DRAINAGE OF THE RECEIVING AREA.

10. ENSURE ALL VEGETATION OUTSIDE LIMITS OF DISTURBANCE IS PRESERVED

11. UPON COMPLETION OF THE PROJECT, ALL TEMPORARILY DISTURBED AREAS, INCLUDING UPLANDS, WETLANDS, AND WETLAND TRANSITION AREAS, MUST BE RESTORED TO THEIR PRE-CONSTRUCTION GRADES USING NATIVE SOILS AND PLANTED WITH INDIGENOUS NON-INVASIVE VEGETATION AS DIRECTED BY THE RE IN CONSULTATION WITH THE BUREAU OF LANDSCAPE ARCHITECTURE AND ENVIRONMENTAL SOLUTIONS' ENVIRONMENTAL TEAM.

12. IF AN ARCHAEOLOGY SITE OR UNDERGROUND STORAGE TANKS ARE UNEXPECTEDLY DISCOVERED DURING CONSTRUCTION, CEASE OPERATIONS IMMEDIATELY AND CONTACT THE BUREAU OF LANDSCAPE ARCHITECTURE AND ENVIRONMENTAL SOLUTIONS THROUGH THE RE.

13. STORE PESTICIDES, FERTILIZERS, FUELS, LUBRICANTS, PETROLEUM PRODUCTS, ANTI-FREEZE, PAINTS AND PAINT THINNERS, CLEANING SOLVENTS AND ACIDS, DETERGENTS, CHEMICAL ADDITIVES, AND CONCRETE CURING COMPOUNDS IN CONTAINERS IN A DRY COVERED AREA. ENSURE MANUFACTURERS' RECOMMENDED APPLICATION RATES, USES, AND METHODS ARE STRICTLY FOLLOWED TO THE EXTENT NECESSARY TO PREVENT OR MINIMIZE THE PRESENCE OF WASTE FROM SUCH MATERIALS IN THE STORMWATER DISCHARGE/RUNOFF FROM THE PROJECT LIMITS. STORE PRODUCTS AT A MINIMUM OF 50 FEET, IF FEASIBLE, FROM A WATERBODY, WETLAND, OR OTHER ENVIRONMENTALLY SENSITIVE AREA.

14. ENSURE THE HANDLING OF WASTE BUILDING MATERIAL, RUBBLE AND OTHER CONSTRUCTION SITE WASTES, INCLUDING LITTER AND HAZARDOUS AND SANITARY WASTES, IS IN ACCORDANCE WITH THE STATE SOLID WASTE MANAGEMENT ACT, N.J.S.A. 13:1E-1 ET SEQ., AND ITS IMPLEMENTING RULES AT N.J.A.C. 7:26, 7:26A, AND 7:26G; THE NEW JERSEY PESTICIDE CONTROL CODE AT N.J.A.C. 7:30; THE STATE LITTER STATUTE (N.J.S.A. 13:1E-99.3); AND OSHA REQUIREMENTS FOR SANITATION AT 29 C.F.R. 1926.

15. ENSURE THE PROJECT LIMITS ARE KEPT CLEAN AND FREE OF DEBRIS, TRASH AND LITTER. CONTAIN LITTER AND WASTE THAT HAS THE POTENTIAL TO BE TRANSPORTED BY STORMWATER DISCHARGE/RUNOFF. ENSURE THE PROJECT LIMITS HAVE ONE OR MORE DESIGNATED WASTE COLLECTION AREAS ONSITE OR ADJACENT TO THE SITE, AND AN ADEQUATE NUMBER OF CONTAINERS (WITH LIDS OR COVERS) FOR WASTE. ENSURE WASTE IS COLLECTED FROM SUCH CONTAINERS BEFORE THEY OVERFLOW. IMMEDIATELY CLEANUP SPILLS AT SUCH CONTAINERS SHOULD THEY OCCUR.

16. CONCRETE WASHOUT SYSTEM: CONCRETE WASHOUT WITHIN THE PROJECT LIMITS IS PROHIBITED OUTSIDE OF DESIGNATED AREAS. PROVIDE CONCRETE WASHOUT FACILITY(IES) AS SPECIFIED IN THE CONCRETE WASHOUT SYSTEM SPECIFICATION IN SECTION 158. MORE THAN ONE DESIGNATED CONCRETE WASHOUT FACILITY LOCATION MAY BE NECESSARY DEPENDING ON EASE OF ACCESS AND THE AMOUNT OF CONCRETE BEING POURED AT ONE TIME.

17. SANITARY SEWAGE/SEPTAGE DISPOSAL: DISCHARGES OF RAW SANITARY SEWAGE OR SEPTAGE ONSITE ARE STRICTLY PROHIBITED. ENSURE PROPER DISPOSAL OF SANITARY SEWAGE/SEPTAGE. PROVIDE AND MAINTAIN ADEQUATE FACILITIES ADJACENT TO THE WORK SITE FOR ALL WORKERS AND OTHER SANITARY NEEDS.

18. BEFORE THE START OF CONSTRUCTION OPERATIONS, PROVIDE A MINIMUM OF TWO (2) OIL-ONLY EMERGENCY SPILL KITS THAT ARE READILY AVAILABLE WITHIN THE PROJECT LIMITS, WITH EACH KIT CAPABLE OF CLEANING UP AT LEAST 95 GALLONS OF SPILL. ENSURE THE KITS ARE AS SPECIFIED IN THE OIL-ONLY EMERGENCY SPILL KIT SPECIFICATION IN SECTION 158. IMMEDIATELY CONTAIN AND CLEAN UP ALL SPILLS. ENSURE CLEANED UP MATERIALS ARE DISPOSED OF IN ACCORDANCE WITH ALL APPLICABLE FEDERAL, STATE, AND LOCAL LAWS, RULES, AND REGULATIONS AND AS SPECIFIED IN 202.03.08 OF THE SPECIFICATIONS. REPLACE COMPONENTS OF SPILL KITS AS USED.

19. IF A SPILL OCCURS, IMMEDIATELY CONTAIN IT AND IMMEDIATELY CONTACT THE NJDEP HOTLINE AT 1-877-WARN DEP (1-877-927-6337), AS WELL AS THE RE. CLEAN UP AND REMEDIATE THE SPILL AS DIRECTED BY NJDEP. SUBMIT AN INCIDENT REPORT TO THE RE AS SPECIFIED IN THE OIL-ONLY EMERGENCY SPILL KIT SPECIFICATION IN SECTION 158.

20. DISCHARGES OF HAZARDOUS SUBSTANCES (AS DEFINED IN N.J.A.C. 7:1E-1.6) IN CONSTRUCTION SITE WASTES ARE SUBJECT TO THE PROVISIONS OF THE SPILL COMPENSATION AND CONTROL ACT, N.J.S.A. 58:10-23.11 ET SEQ., AND OF NEW JERSEY DEPARTMENT OF ENVIRONMENTAL PROTECTION RULES FOR DISCHARGES OF PETROLEUM AND OTHER HAZARDOUS SUBSTANCES AT N.J.A.C. 7:1E.

21. ENSURE REFUELING OPERATIONS ARE CONDUCTED AT A MINIMUM OF 50 FEET, IF FEASIBLE, FROM A WATERBODY, WETLAND, OR OTHER ENVIRONMENTALLY SENSITIVE AREA. DO NOT STORE FUEL TANKS CLOSER THAN 50 FEET, WHERE FEASIBLE, FROM THESE SENSITIVE AREAS. IMMEDIATELY REPAIR LEAKING EQUIPMENT OR REMOVE IT FROM THE PROJECT LIMITS. CLEAN UP THE TAINTED MATERIAL AND DISPOSE OF THE MATERIAL AS SPECIFIED IN 202.03.08 OF THE SPECIFICATIONS. PROTECT FUELING AREAS FROM RUN-ON AND RUNOFF.

22. ENVIRONMENTAL COMPLIANCE INSPECTIONS (INCLUDING, BUT NOT LIMITED TO, SOIL EROSION AND SEDIMENT CONTROL MEASURES, WATER QUALITY MEASURES, AND SITE WASTE CONTROL OPERATIONS) ARE TO BE PERFORMED BY THE CONTRACTOR AND THE RE AS SPECIFIED IN SECTION 158 OF THE SPECIFICATIONS. COMPLETE THE NJDOT ENVIRONMENTAL COMPLIANCE CHECKLIST AND INSPECTION FORM FOR EACH INSPECTION AND RETAIN THE ORIGINAL WITHIN THE PROJECT LIMITS. MAKE THE FORM AVAILABLE UP ON REQUEST.

EP-1 / EP-1

NEW JERSEY DEPARTMENT OF TRANSPORTATION

ENVIRONMENTAL NOTES

ROUTE 80 BRIDGES OVER ROUTE 287 NORTHBOUND AND SMITH ROAD
CONTRACT NO. 043003714

DEWBERRY-GOODKIND, INC.
CERTIFICATE OF AUTHORIZATION NO. 24GA28047600
8/24/10
ANTHONY FULCO, P.E.
NJ PROFESSIONAL ENGINEER LICENSE NO. 24GE03993900

Dewberry-Goodkind, Inc.
Bloomfield, N.J.

STATE	FEDERAL PROJECT NO.
N.J.	BR-080-5(094)

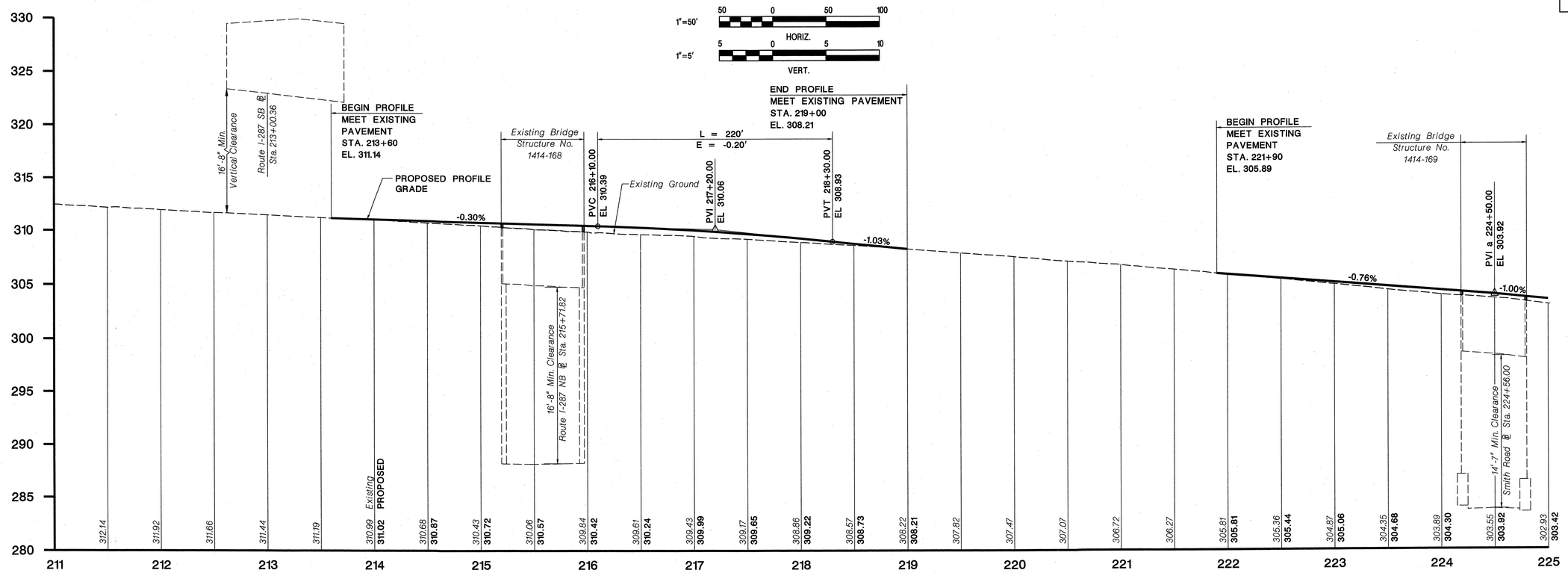

ROUTE 80 EASTBOUND
DESIGN SPEED 70 MPH

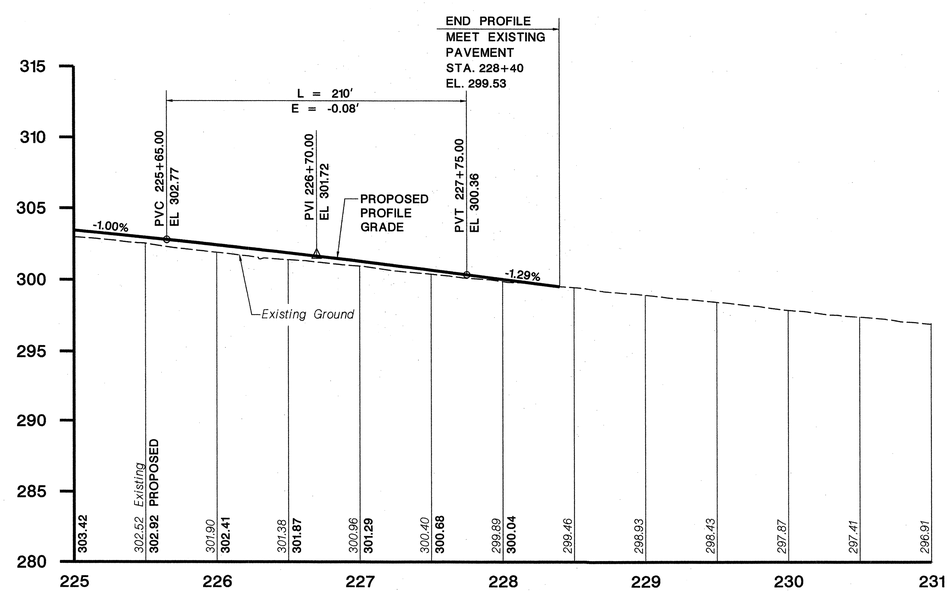

ROUTE 80 EASTBOUND
DESIGN SPEED 70 MPH

ROUTE 80 EASTBOUND P-1 / P-2

NEW JERSEY DEPARTMENT OF TRANSPORTATION

PROFILES

ROUTE 80 BRIDGES OVER ROUTE 287 NORTHBOUND AND SMITH ROAD
CONTRACT NO. 043003714

DEWBERRY-GOODKIND, INC.
CERTIFICATE OF AUTHORIZATION NO. 24GA28047600
8/24/10
ANTHONY FULCO, P.E.
NJ PROFESSIONAL ENGINEER LICENSE NO. 24GE03993900

Dewberry-Goodkind, Inc.
Bloomfield, N.J.

apisani 8/24/2010 8:59:30 AM OceTDS700-BW.plt 30-scale 3056-REDECKING-Route80-287-V8 Q:\3056\Redecking\CAD\Civil\PLANS\ACPR305601.dgn

STATE	FEDERAL PROJECT NO.
N.J.	BR-080-5(094)

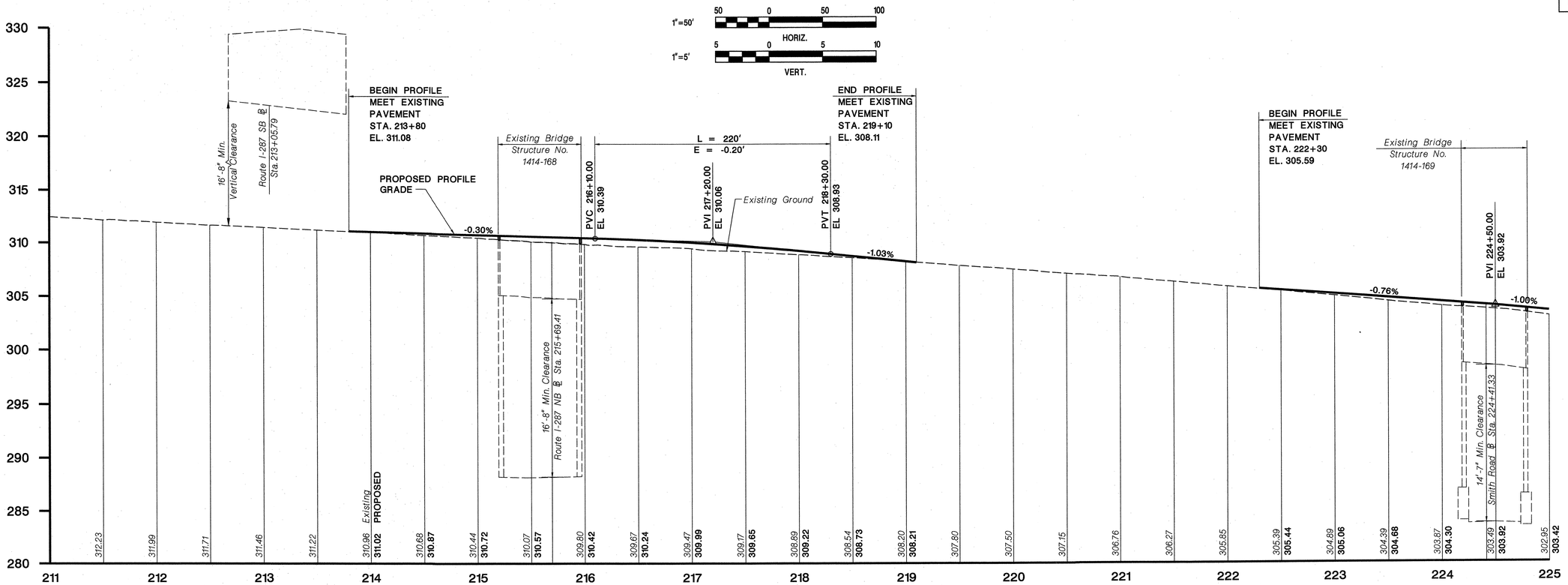

ROUTE 80 WESTBOUND
DESIGN SPEED 70 MPH

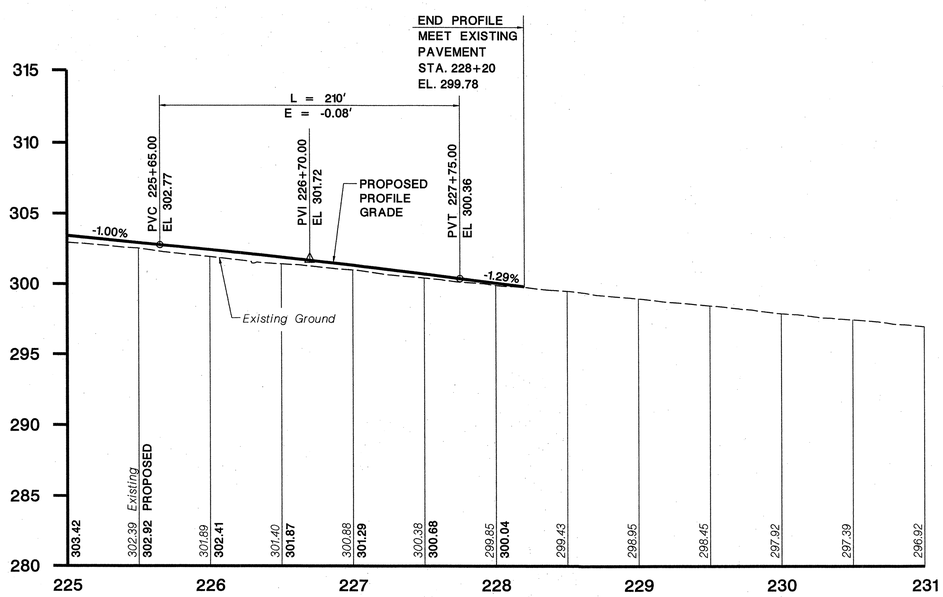

ROUTE 80 WESTBOUND
DESIGN SPEED 70 MPH

ROUTE 80 WESTBOUND

P-2 / P-2

NEW JERSEY DEPARTMENT OF TRANSPORTATION

PROFILES

ROUTE 80 BRIDGES OVER ROUTE 287
NORTHBOUND AND SMITH ROAD
CONTRACT NO. 043003714

DEWBERRY-GOODKIND, INC.
CERTIFICATE OF AUTHORIZATION NO. 24GA28047600
8/24/10
ANTHONY FULCO, P.E.
NJ PROFESSIONAL ENGINEER LICENSE NO. 24GE03993900

12
129

Dewberry-Goodkind, Inc.
Bloomfield, N.J.

apisani 8/24/2010 8:59:36 AM OceTDS700-BW.plt 30-scale 3056-REDECKING-Route80-287-V8 Q:\3056\Redecking\CAD\Civil\PLANS\ACPR305602.dgn

STATE	FEDERAL PROJECT NO.
N.J.	BR-080-5(094)

TOWNSHIP OF PARSIPPANY - TROY HILLS

1"=100'

COUNTY OF MORRIS

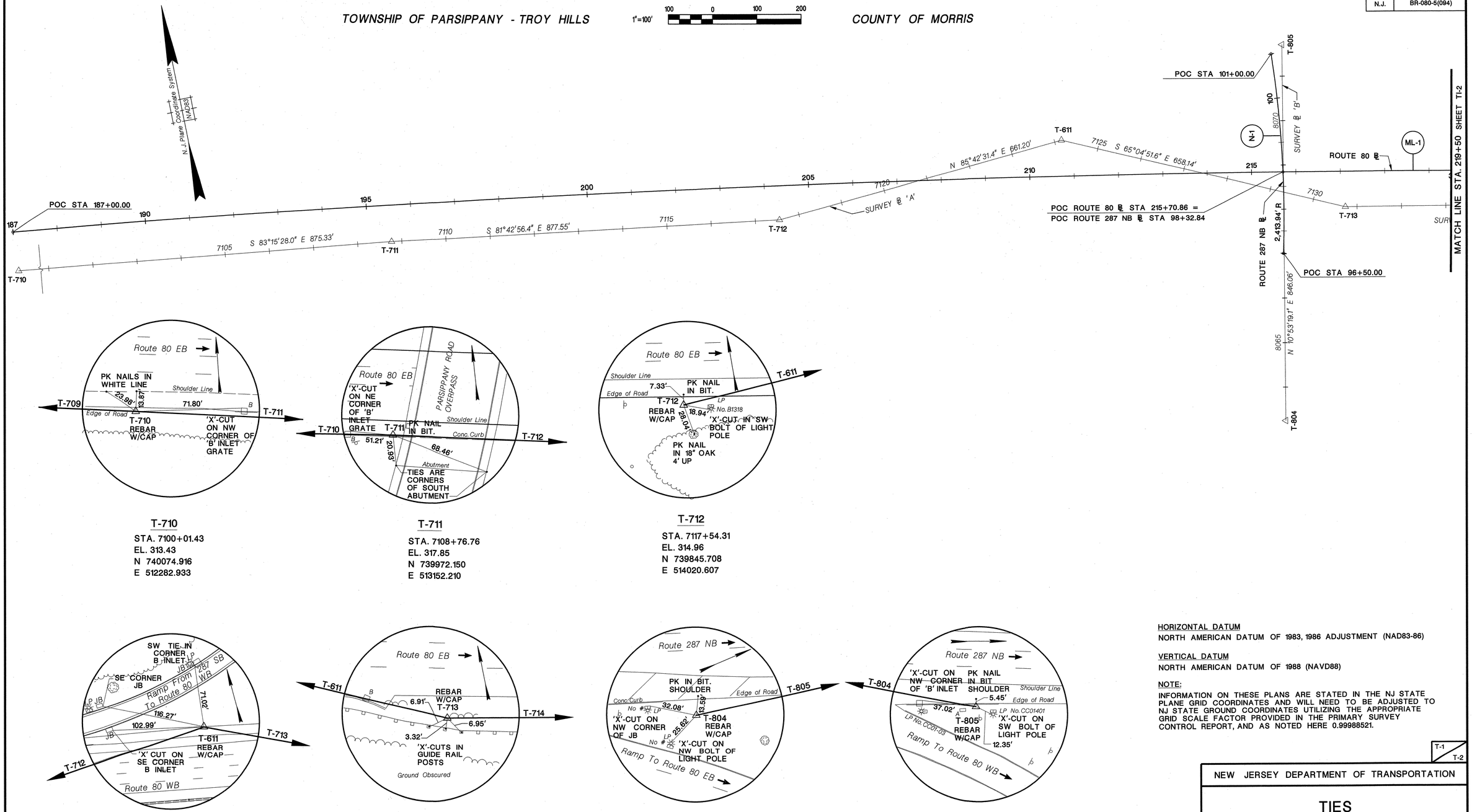

T-710
STA. 7100+01.43
EL. 313.43
N 740074.916
E 512282.933

T-711
STA. 7108+76.76
EL. 317.85
N 739972.150
E 513152.210

T-712
STA. 7117+54.31
EL. 314.96
N 739845.708
E 514020.607

T-611
STA. 7124+15.51
EL. 312.27
N 739895.180
E 514679.956

T-713
STA. 7130+73.66
EL. 308.62
N 739617.884
E 515276.828

T-804
STA. 8063+23.88
EL. 295.40
N 739172.805
E 515049.723

T-805
STA.8071+69.94
EL. 291.64
N 740003.629
E 515209.543

HORIZONTAL DATUM
NORTH AMERICAN DATUM OF 1983, 1986 ADJUSTMENT (NAD83-86)

VERTICAL DATUM
NORTH AMERICAN DATUM OF 1988 (NAVD88)

NOTE:
INFORMATION ON THESE PLANS ARE STATED IN THE NJ STATE PLANE GRID COORDINATES AND WILL NEED TO BE ADJUSTED TO NJ STATE GROUND COORDINATES UTILIZING THE APPROPRIATE GRID SCALE FACTOR PROVIDED IN THE PRIMARY SURVEY CONTROL REPORT, AND AS NOTED HERE 0.99988521.

T-1 / T-2

NEW JERSEY DEPARTMENT OF TRANSPORTATION

TIES

ROUTE 80 BRIDGES OVER ROUTE 287 NORTHBOUND AND SMITH ROAD
CONTRACT NO. 043003714

DEWBERRY-GOODKIND, INC.
CERTIFICATE OF AUTHORIZATION NO. 24GA28047600

8/24/10
ANTHONY FULCO, P.E.
NJ PROFESSIONAL ENGINEER LICENSE NO. 24GE03993900

Dewberry-Goodkind, Inc.
Bloomfield, N.J.

STATE	FEDERAL PROJECT NO.
N.J.	BR-080-5(094)

TOWNSHIP OF PARSIPPANY - TROY HILLS

1"=100' (100 0 100 200)

COUNTY OF MORRIS

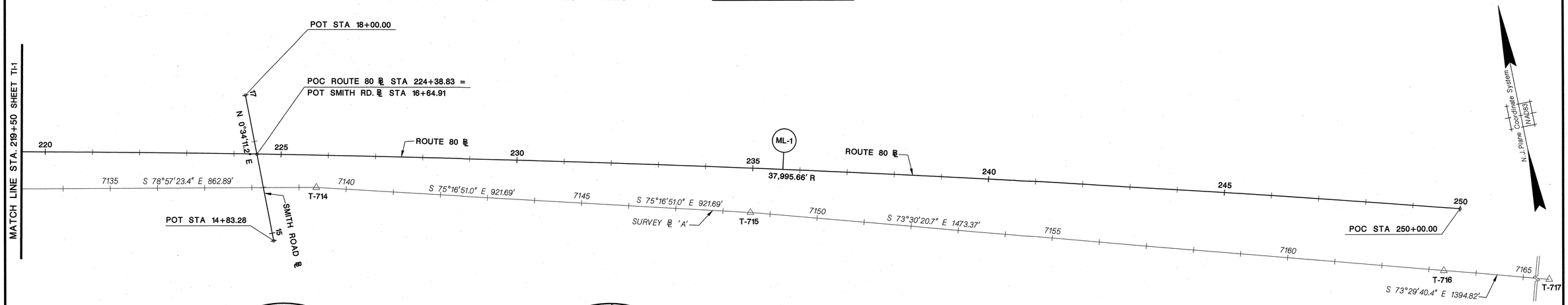

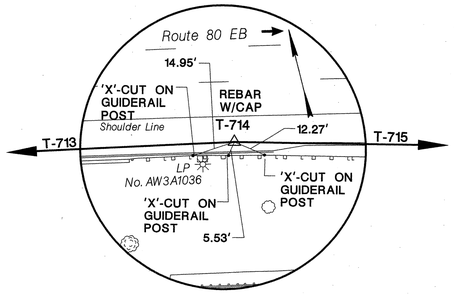

T-714
STA. 7139+36.55
EL. 301.61
N 739452.593
E 516123.744

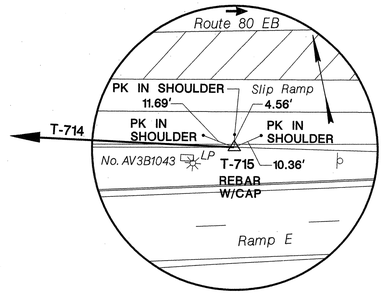

T-715
STA. 7148+58.24
EL. 292.28
N 739218.409
E 517015.186

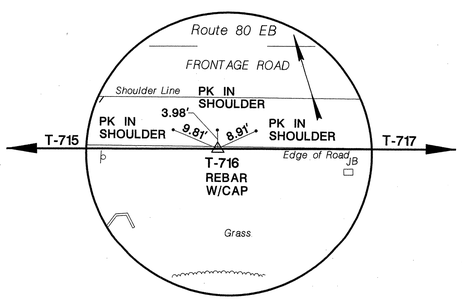

T-716
STA. 7163+31.61
EL. 277.15
N 738800.091
E 518427.923

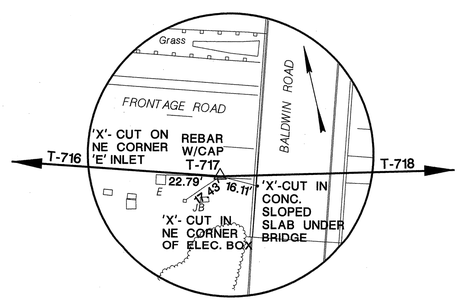

T-717
STA. 7177+26.42
EL. 260.71
N 738403.815
E 519765.262

ALIGNMENT DATA

	SURVEY BASELINE			
	STATION	OFFSET	NORTH	EAST
ROUTE 80 MAINLINE				
POC STA 187+00.00	7100+26.27	88.64 LT	740160.026	512318.011
POC STA 250+00.00	7163+54.34	134.46 LT	738922.553	518487.923
ROUTE 287 NORTHBOUND				
POC STA 96+50.00	8067+01.34	1.61 LT	739543.777	515119.441
POC STA 101+00.00	8071+50.11	24.55 LT	739988.793	515181.688
SMITH ROAD				
POT STA 14+83.28	7138+45.69	114.32 RT	739357.793	516012.666
POT STA 18+00.00	7137+88.11	197.12 LT	739674.497	516015.816

CURVE DATA

NO.	DELTA	R	L	T	E	CENTER N	CENTER E
ROUTE 80 MAINLINE							
ML-1	9°30'00.4"	37995.66	6300.00	3157.24	130.95	702415.486	507956.805
ROUTE 287 NORTHBOUND							
N-1	10°40'51.2"	2413.94	450.00	225.65	10.52	740099.231	512770.271

T-2 / T-2

NEW JERSEY DEPARTMENT OF TRANSPORTATION

TIES

ROUTE 80 BRIDGES OVER ROUTE 287 NORTHBOUND AND SMITH ROAD
CONTRACT NO. 043003714

DEWBERRY-GOODKIND, INC.
CERTIFICATE OF AUTHORIZATION NO. 24GA28047600
8/24/10
ANTHONY FULCO, P.E.
NJ PROFESSIONAL ENGINEER LICENSE NO. 24GE03993900

Dewberry-Goodkind, Inc.
Bloomfield, N.J.

STATE	FEDERAL PROJECT NO.
N.J.	BR-080-5(094)

TOWNSHIP OF PARSIPPANY - TROY HILLS

1"=30' 30 0 30 60

COUNTY OF MORRIS

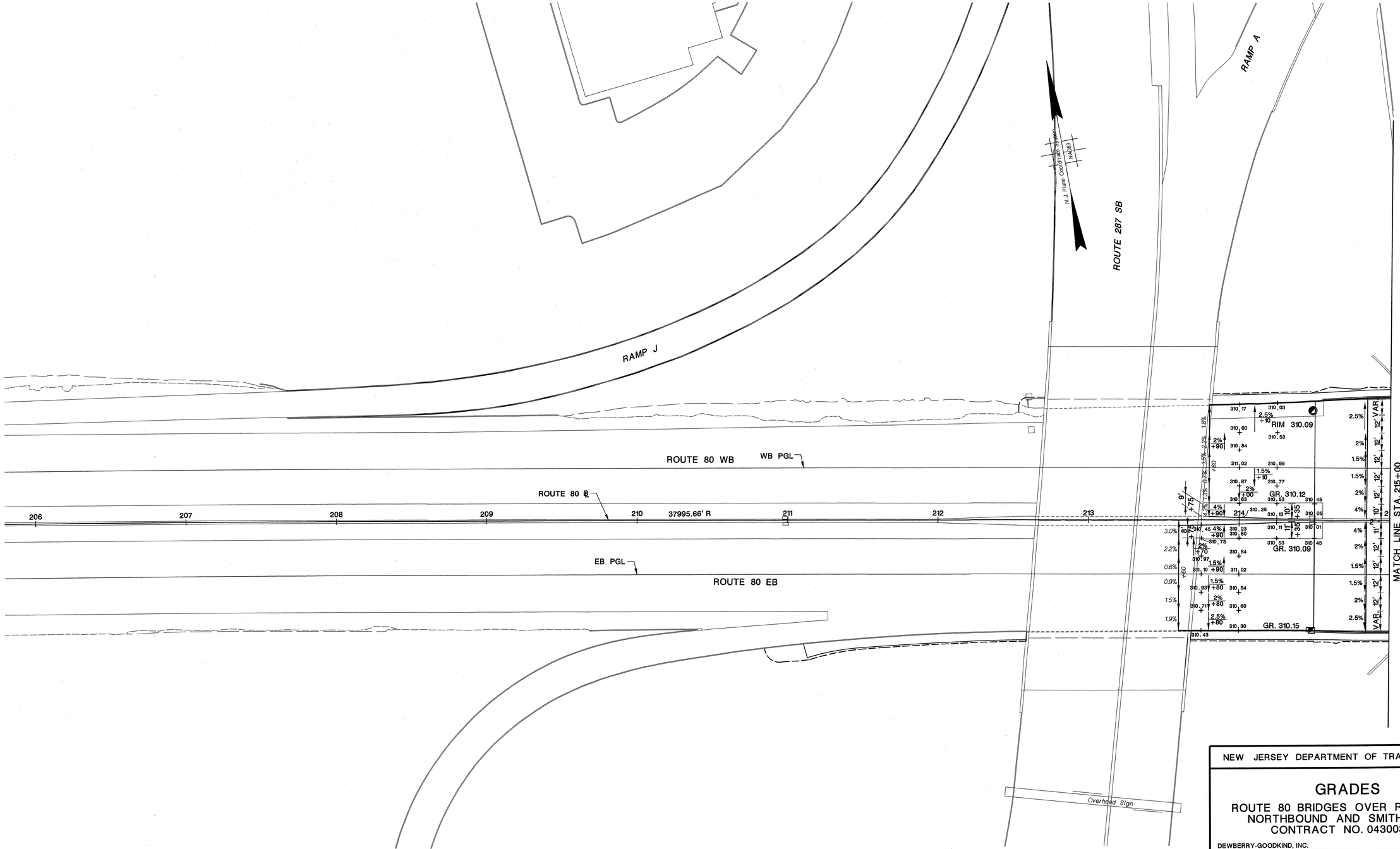

G-1 / G-3

NEW JERSEY DEPARTMENT OF TRANSPORTATION

GRADES

ROUTE 80 BRIDGES OVER ROUTE 287
NORTHBOUND AND SMITH ROAD
CONTRACT NO. 043003714

DEWBERRY-GOODKIND, INC.

CERTIFICATE OF AUTHORIZATION NO. 24GA28047600

8/24/10

ANTHONY FULCO, P.E.

NJ PROFESSIONAL ENGINEER LICENSE NO. 24GE03993900

15
129

Dewberry-Goodkind, Inc.
Bloomfield, N.J.

apisani 8/24/2010 8:59:58 AM OceTDS700-BW.plt 30-scale 3056-REDECKING-Route80-287-V8 Q:\3056\Redecking\CAD\Civil\PLANS\ACGR305601.dgn

STATE	FEDERAL PROJECT NO.
N.J.	BR-080-5(094)

TOWNSHIP OF PARSIPPANY - TROY HILLS

1"=30'

30 0 30 60

COUNTY OF MORRIS

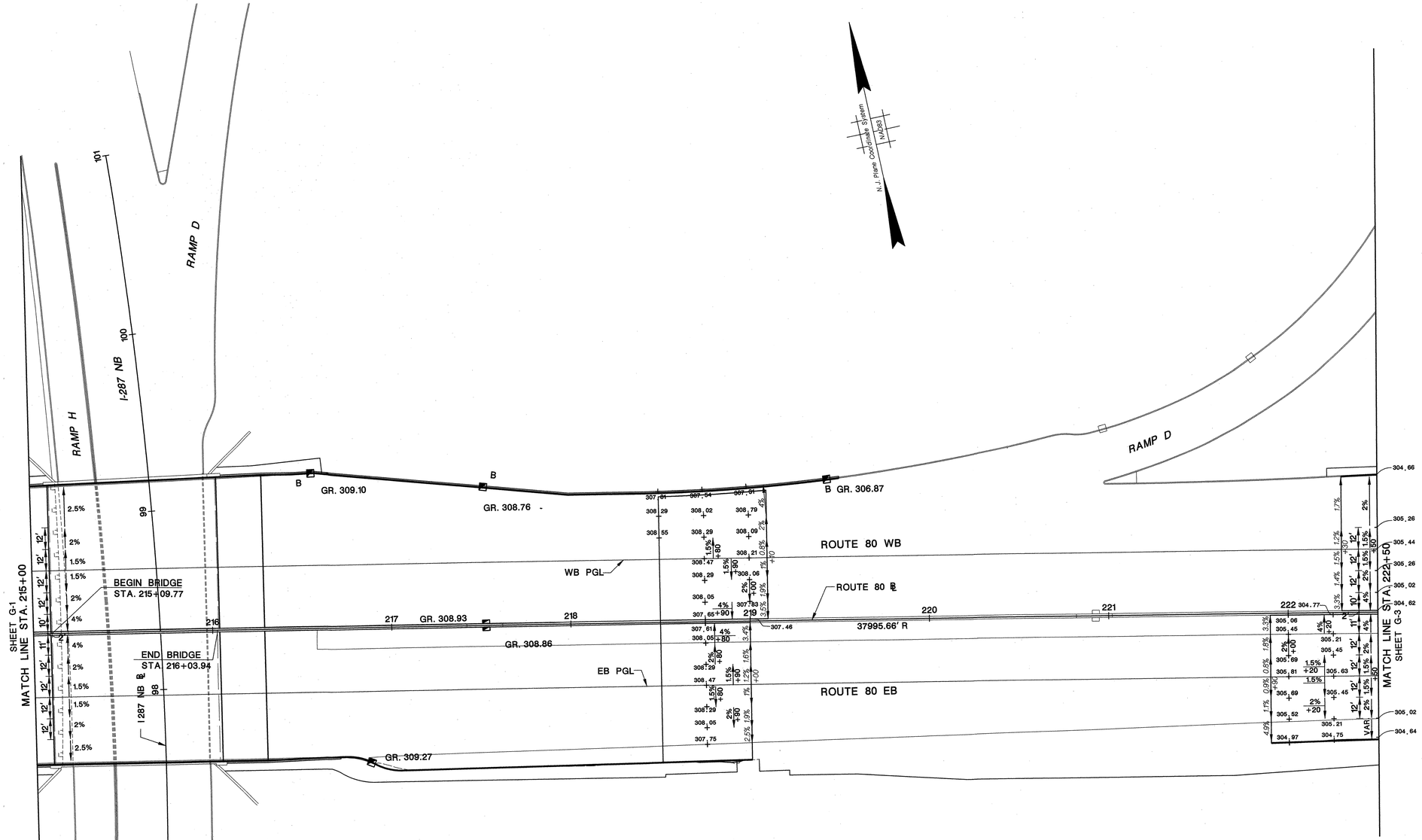

G-2 / G-3

NEW JERSEY DEPARTMENT OF TRANSPORTATION

GRADES

ROUTE 80 BRIDGES OVER ROUTE 287
NORTHBOUND AND SMITH ROAD
CONTRACT NO. 043003714

DEWBERRY-GOODKIND, INC.

CERTIFICATE OF AUTHORIZATION NO. 24GA28047600

8/24/10

ANTHONY FULCO, P.E.

NJ PROFESSIONAL ENGINEER LICENSE NO. 24GE03993900

Dewberry-Goodkind, Inc.
Bloomfield, N.J.

apisani 8/24/2010 9:00:03 AM OceTDS700-BW.plt 30-scale 3056-REDECKING-Route80-287-V8 Q:\3056\Redecking\CAD\Civil\PLANS\ACGR305602.dgn

STATE	FEDERAL PROJECT NO.
N.J.	BR-080-5(094)

TOWNSHIP OF PARSIPPANY - TROY HILLS

1"=30' 30 0 30 60

COUNTY OF MORRIS

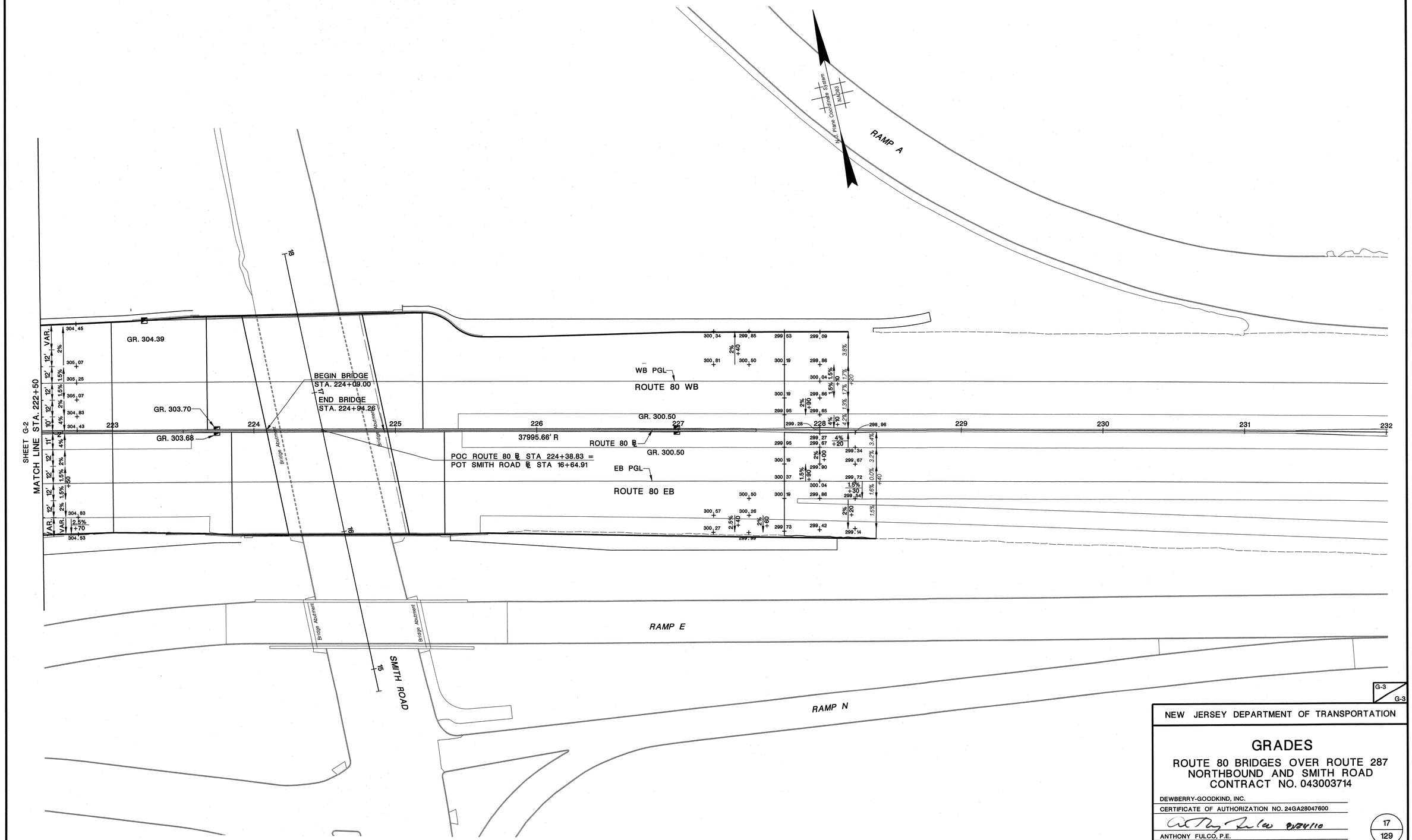

G-3
G-3

NEW JERSEY DEPARTMENT OF TRANSPORTATION

GRADES

ROUTE 80 BRIDGES OVER ROUTE 287
NORTHBOUND AND SMITH ROAD
CONTRACT NO. 043003714

DEWBERRY-GOODKIND, INC.
CERTIFICATE OF AUTHORIZATION NO. 24GA28047600

8/24/10

ANTHONY FULCO, P.E.
NJ PROFESSIONAL ENGINEER LICENSE NO. 24GE03993900

17
129

Dewberry-Goodkind, Inc.
Bloomfield, N.J.

apisani 8/24/2010 9:00:09 AM OceTDS700-BW.plt 30-scale 3056-REDECKING-Route80-287-V8 Q:\3056\Redecking\CAD\Civil\PLANS\ACGR305603.dgn

STATE	FEDERAL PROJECT NO.
N.J.	BR-080-5(094)

LEGEND

- BREAKAWAY BARRICADE
- BREAKAWAY BARRICADE WITH SIGN
- CONSTRUCTION SIGN
- VMS — VARIABLE MESSAGE SIGN
- DRUM
- PRECAST CONCRETE CURB CONSTRUCTION BARRIER (TYPE SPECIFIED)
- DIRECTION OF TRAFFIC FLOW
- FLAGGER
- TRAILER MOUNTED ARROW BOARD SHOWING CAUTION MODE
- ILLUMINATED FLASHING ARROW MOUNTED ON TOWING VEHICLE SHOWING ARROW PATTERN (LEFT, RIGHT OR BOTH)
- TRAFFIC CONTROL TRUCK WITH MOUNTED CRASH CUSHION AND ARROW BOARD SHOWING CAUTION PATTERN
- TRAFFIC CONTROL TRUCK WITH MOUNTED CRASH CUSHION AND ARROW BOARD SHOWING ARROW PATTERN (LEFT, RIGHT OR BOTH)
- TEMPORARY CRASH CUSHION, INERTIAL BARRIER SYSTEM
- TEMPORARY CRASH CUSHION, QUADGUARD
- TEMPORARY CRASH CUSHION, (ALL OTHER APPROVED)
- CONSTRUCTION THIS STAGE
- MILLING
- TEMPORARY PAVEMENT THIS STAGE

1. ADVANCE WARNING SIGNS, DISTANCES AND TAPER LENGTHS MAY BE EXTENDED, AT THE DIRECTION OF THE RESIDENT ENGINEER, TO ADJUST FOR REDUCED VISIBILITY DUE TO HORIZONTAL AND VERTICAL CURVATURE OF THE ROADWAY.
2. THE APPROXIMATE LOCATIONS OF THE ILLUMINATED FLASHING ARROW BOARDS ARE SHOWN ON THE TRAFFIC CONTROL PLANS. THESE LOCATIONS MAY BE MODIFIED TO ADJUST FOR VISIBILITY DUE TO HORIZONTAL OR VERTICAL CURVATURE OF THE ROADWAY OR TO POSITION AT A SAFER LOCATION. ILLUMINATED FLASHING ARROW BOARDS ARE TO BE USED FOR TEMPORARY LANE CLOSINGS AND AT LOCATIONS SHOWN ON THE TRAFFIC CONTROL PLANS.
3. PRIOR TO ANY ROAD CONSTRUCTION, TRAFFIC CONTROL SIGNS AND DEVICES SHALL BE IN PLACE.
4. RAMPS AND/OR SIDE STREETS ENTERING THE ROADWAY AFTER THE FIRST ADVANCE WARNING SIGN SHALL BE PROVIDED WITH AT LEAST ONE W20-1F SIGN (ROAD WORK AHEAD) AS A MINIMUM.
5. ALL EXISTING ROAD SIGNS, PAVEMENT MARKINGS AND/OR PLOWABLE PAVEMENT REFLECTORS WHICH CONFLICT WITH THE PROPOSED TRAFFIC CONTROL PLAN SHALL BE COVERED, REMOVED OR RELOCATED AS DIRECTED BY THE RE.
6. MAINTENANCE AND PROTECTION OF TRAFFIC SHALL BE IN ACCORDANCE WITH THE MANUAL OF UNIFORM TRAFFIC CONTROL DEVICES - PART VI, STANDARDS AND GUIDES FOR TRAFFIC CONTROL FOR STREET AND HIGHWAY CONSTRUCTION, MAINTENANCE, UTILITY AND INCIDENT MANAGMENT OPERATIONS, UNLESS OTHERWISE NOTED IN THE PLANS AND SPECIFICATIONS, AND SHALL BE APPROVED BY THE RE.
7. CONSTRUCTION SIGN W99-2 (GIVE US A BRAKE) SHALL BE LOCATED 200 FEET IN ADVANCE OF PROJECT LIMITS.
8. A W1-6 (ARROW) SIGN MOUNTED ON A BREAKAWAY BARRICADE AND CENTERED ON THE CLOSED WIDTH SHALL BE LOCATED 100 FEET BEYOND EACH INTERSECTION OR MAIN ACCESS POINT WITHIN THE AREA OF A LANE OR SHOULDER CLOSURE.
9. CONSTRUCTION SIGNS W8-9A (SYMBOL FOR UNEVEN PAVEMENT) AND W8-14A (GROOVED PAVEMENT) SHALL BE USED WHEN SUCH PAVEMENT CONDITIONS EXIST. THE PLACEMENT OF THESE SIGNS SHALL BE AS DIRECTED BY THE RE.
10. MOVING WORK AREAS IN A LANE CLOSURE REQUIRE A TRAILER MOUNTED ILLUMINATED FLASHING ARROW TO REMAIN AT THE END OF THE TAPER. THE TRAFFIC CONTROL TRUCK WITH MOUNTED CRASH CUSHION THAT SHALL MOVE WITH THE WORK AREAS TO KEEP A 70 FT MIN. AND 150 FT MAX. BUFFER IN ADVANCE OF EACH WORK AREA.
11. THE CONTRACTOR SHALL SUBMIT A PLAN FOR THE SAFE ACCESS OF CONSTRUCTION VEHICLES THROUGHOUT THE WORK SITE WHERE SPACE CONSTRAINTS PREVENT THE USE OF LANE CLOSURES. THE PLAN SHALL BE SUBMITTED TO THE RE IN ACCORDANCE WITH SECTION 617 OF THE STANDARD SPECIFICATIONS.
12. ALL EXCAVATED AREAS WITHIN OR ADJACENT TO THE ROADWAY SHALL BE BACKFILLED WITH AT LEAST A 6H:1V SLOPE BEFORE THE END OF EACH WORK DAY. OTHER EXCAVATED AREAS WITHIN THE CLEAR ZONE ARE TO BE EITHER BACKFILLED OR A TEMPORARY BARRIER WITH APPROPRIATE END TREATMENT SET IN PLACE TO SHIELD VEHICULAR TRAFFIC.
13. BITUMINOUS CONCRETE PLACED DURING THE VARIOUS CONSTRUCTION STAGES SHALL BE TRANSITIONED ON A MINIMUM 20H:1V SLOPE TO MEET ADJACENT EXISTING GRADE AT THE LONGITUDINAL AND TRANSVERSE LIMITS OF THE STAGE CONSTRUCTION AREAS UNLESS OTHERWISE NOTED ON THE STAGE CONSTRUCTION PLANS.
14. THE PLACEMENT AND OR RELOCATION OF PRECAST CONCRETE CURB, CONSTRUCTION BARRIER SHALL BE DONE DURING APPROVED OFF-PEAK HOURS WHEN TRAFFIC MAY BE REDUCED.
15. CONSTRUCTION ZONE SPEED LIMIT WILL BE DETERMINED BY THE TRAFFIC SIGNAL & SAFETY ENGINEER, REGIONAL TRAFFIC ENGINEER AT THE TIME OF OR DURING CONSTRUCTION, AS REQUESTED BY THE RE.
16. THE SPEED LIMIT, R2-1 (BLACK ON WHITE) WITH ADDED WORK ZONE PLATE AREAS (BLACK ON ORANGE) SIGNS SHALL BE LOCATED THROUGH WORK AS DIRECTED BY THE TRAFFIC SIGNAL & SAFETY ENGINEER, REGIONAL TRAFFIC ENGINEER.
17. THE REDUCED SPEED AHEAD SIGN, W3-5(S) (BLACK ON ORANGE) SHALL BE LOCATED IN ADVANCE OF SPEED LIMIT R2-1 SIGNS WHICH REDUCE THE NORMAL POSTED SPEED LIMIT THROUGH THE CONSTRUCTION ZONE.
18. "TRAFFIC FINES DOUBLED IN WORK AREA" R(NJ)5-17(S), 4 FEET BY 2.5 FEET SIGN SHALL BE LOCATED 500 FEET AFTER THE FIRST ADVANCE WARNING SIGN (W20 SERIES) AT EACH WORK AREA. THIS SIGN SHALL ALSO BE USED IN MOVING WORK ZONES IN WHICH CASE THE SIGN SHALL BE MOUNTED ON A SLOW MOVING CONSTRUCTION VEHICLE.
19. THE FINAL BITUMINOUS CONCRETE SURFACE COURSE SHALL BE CONSTRUCTED IN THE FINAL STAGE OF THE PROJECT.
20. TRAFFIC CONTROL DEVICES FOR LANE CLOSURES INCLUDING SIGNS, CONES, BARRICADES, ETC. SHALL BE PLACED AS SHOWN ON PLANS. SIGNS SHALL NOT BE PLACED WITHOUT ACTUAL LANE CLOSURE AND BE IMMEDIATELY REMOVED UPON REMOVAL OF THE CLOSURES.
21. CONES MAY BE SUBSTITUTED FOR DRUMS AND INSTALLED UPON THE APPROVAL OF THE RE.
22. THE ALLOWABLE ROUTE 80 LANE CLOSURE SCHEDULE SHALL BE AS FOLLOWS:

GENERAL NOTES

LANE CLOSURE SCHEDULE

ROUTE 80 EASTBOUND MP 43.63 - 43.91	
TWO LANES MAINTAINED AND TWO LANES CLOSED	
MONDAY THROUGH THURSDAY	9:00 PM TO 5:00 AM (NEXT DAY)
FRIDAY	9:30 PM TO 6:00 AM (SATURDAY)
SATURDAY	9:30 PM TO 7:00 AM (SUNDAY)
SUNDAY	9:00 PM TO 5:00 AM (MONDAY)
ONE LANE MAINTAINED AND THREE LANES CLOSED	
MONDAY THROUGH THURSDAY	10:00 PM TO 5:00 AM (NEXT DAY)
FRIDAY	10:30 PM TO 6:00 AM (SATURDAY)
SATURDAY	10:30 PM TO 7:00 AM (SUNDAY)
SUNDAY	10:00 PM TO 5:00 AM (MONDAY)

ROUTE 80 WESTBOUND MP 43.63 - 43.91	
TWO LANES MAINTAINED AND TWO LANES CLOSED	
MONDAY THROUGH THURSDAY	10:00 PM TO 6:00 AM (NEXT DAY)
FRIDAY	10:30 PM TO 7:00 AM (SATURDAY)
SATURDAY	10:30 PM TO 7:00 AM (SUNDAY)
SUNDAY	10:00 PM TO 6:00 AM (MONDAY)
ONE LANE MAINTAINED AND THREE LANES CLOSED	
MONDAY THROUGH THURSDAY	11:00 PM TO 5:00 AM (NEXT DAY)
FRIDAY	11:30 PM TO 6:00 AM (SATURDAY)
SATURDAY	11:30 PM TO 7:00 AM (SUNDAY)
SUNDAY	11:00 PM TO 5:00 AM (MONDAY)

ROUTE 287 NORTH AND SOUTHBOUND MP 34.04	
ALL LANES MAINTAINED (EACH DIRECTION)	
MONDAY THROUGH THURSDAY	6:00 AM TO 9:00 PM
FRIDAY	6:00 AM TO 9:30 PM
SATURDAY	7:00 AM TO 9:30 PM
SUNDAY	7:00 AM TO 9:00 PM
TWO LANES MAINTAINED	
MONDAY THROUGH THURSDAY	9:00 PM TO 6:00 AM (NEXT DAY)
FRIDAY	9:30 PM TO 7:00 AM (SATURDAY)
SATURDAY	9:30 PM TO 7:00 AM (SUNDAY)
SUNDAY	9:00 PM TO 6:00 AM (MONDAY)
ONE LANE MAINTAINED	
MONDAY THROUGH THURSDAY	10:00 PM TO 5:30 AM (NEXT DAY)
FRIDAY	10:30 PM TO 6:00 AM (SATURDAY)
SATURDAY	10:30 PM TO 7:00 AM (SUNDAY)
SUNDAY	10:00 PM TO 6:00 AM (MONDAY)

RAMP H CLOSURE	
MONDAY THROUGH SUNDAY	10:00 PM TO 5:00 AM

23. THE CONTRACTOR SHALL NOTIFY THE RESIDENT ENGINEER IN WRITING AT LEAST TWENTY-EIGHT CALENDAR DAYS, BUT NOT MORE THAN SIXTY DAYS, IN ADVANCE OF THE DATE OF ESTABLISHING A NEW TRAFFIC PATTERN SUCH AS A START OF A STAGE, START OF A SUBSTAGE, PERMANENT LANE CLOSURE, AND DETOUR. START OF A NEW TRAFFIC PATTERN WILL NOT BE PERMITTED PRIOR TO THE DATE GIVEN IN THE NOTICE. THE CONTRACTOR SHALL CONFIRM, IN WRITING TO THE RESIDENT ENGINEER, THE DATE OF THE NEW TRAFFIC PATTERN 14 DAYS BEFORE ESTABLISHMENT.
24. THE ESTABLISHMENT OF A NEW TRAFFIC PATTERN MAY BEGIN NO EARLIER THAN 11:00 PM FRIDAY AND MUST BE COMPLETED AND READY FOR OPERATIONS BY 6:00 PM THE FOLLOWING SUNDAY.
25. ALL LANE AND/OR SHOULDER CLOSURES, DETOURS, AND OTHER TRAFFIC IMPACTS SCHEDULED FOR THE SEVEN DAY PERIOD STARTING ON THE FOLLOWING MONDAY SHALL BE SUBMITTED TO THE RESIDENT ENGINEER BY 8 AM OF EACH FRIDAY ON WEEKLY FORMS PROVIDED BY THE DEPARTMENT.
26. A TEMPORARY CLOSURE OR TEMPORARY TRAFFIC IMPACT IS DEFINED AS ONE HAVING A DURATION LESS THAN 24 HOURS. A PERMANENT CLOSURE OR PERMANENT TRAFFIC IMPACT IS DEFINED AS ONE WITH A CONTINUOUS DURATION OF 24 HOURS OR MORE. EACH DAY OF TEMPORARY CLOSURES AND TEMPORARY TRAFFIC IMPACTS SHALL BE SUBMITTED TO THE RESIDENT ENGINEER 24 HOURS IN ADVANCE OF THE START OF THOSE OPERATIONS ON DAILY FORMS PROVIDED BY THE DEPARTMENT.
27. DETAILS OF TEMPORARY WEEKEND TRAFFIC IMPACTS SHALL BE SUBMITTED TO THE RESIDENT ENGINEER BY 8:00 AM ON THE IMMEDIATELY PRECEDING FRIDAY ON THE DAILY FORMS PROVIDED BY THE DEPARTMENT.
28. ANY REQUEST FOR DEVIATION FROM THE TRAFFIC CONTROL REQUIREMENTS IN THE CONTRACT DOCUMENTS INCLUDING, BUT NOT LIMITED TO: LANE CLOSURE SCHEDULE, CHANGES IN HOURS, USE OF LANE SHIFTS, SHOULDER CLOSURES, ALTERNATING TRAFFIC PATTERNS, MOVING OPERATIONS, DETOURS, AND TRAFFIC SLOW DOWNS, SHALL BE SUBMITTED IN WRITING TO THE RESIDENT ENGINEER AT LEAST TWENTY-EIGHT CALENDAR DAYS IN ADVANCE OF THE REQUESTED CHANGE.
29. NO LANE OR SHOULDER CLOSURES WILL BE PERMITTED ON THE FOLLOWING HOLIDAYS:

EASTER SUNDAY	(INCLUDING 6:00AM SATURDAY UNTIL NOON MONDAY)
MEMORIAL DAY	(SEE NOTE BELOW)
JULY 4TH	(SEE NOTE BELOW)
LABOR DAY	(SEE NOTE BELOW)
ELECTION DAY	(6:00AM UNTIL 8:00PM THE DAY OF)
THANKSGIVING DAY	(SEE NOTE BELOW)
CHRISTMAS DAY	(SEE NOTE BELOW)
NEW YEAR'S DAY	(SEE NOTE BELOW)

29. (CONTD) NOTE:

IF HOLIDAY FALLS ON	NO LANE CLOSURE PERMITTED
SUNDAY OR MONDAY	6:00AM FRIDAY UNTIL NOON TUESDAY
TUESDAY	6:00AM FRIDAY UNTIL NOON WEDNESDAY
WEDNESDAY	6:00AM TUESDAY UNTIL NOON THURSDAY
THURSDAY	6:00AM WEDNESDAY UNTIL NOON MONDAY
FRIDAY OR SATURDAY	6:00 AM THURSDAY UNTIL NOON MONDAY

30. THE RESIDENT ENGINEER MUST NOTIFY TRAFFIC OPERATIONS NORTH FOR ALL PLANNED LANE AND/OR SHOULDER CLOSURES, AND OTHER TRAFFIC IMPACTS IN ACCORDANCE WITH THE NEW JERSEY DEPARTMENT OF TRANSPORTATION POLICY AND PROCEDURE NUMBER 108.
31. ALL SIGNS SHALL HAVE A RETROREFLECTIVE SHEETING BACKGROUND AND BE FABRICATED FROM ALUMINUM AS SPECIFIED IN THE SPECIFICATIONS.
32. ALL SIGNS AND BARRICADES SHALL BE FURNISHED AND PLACED BY THE CONTRACTOR AT THE LOCATIONS SHOWN ON PLANS, OR AS DESIGNATED BY THE ENGINEER.
33. IF AND WHEN DIRECTED BY THE ENGINEER, THE CONTRACTOR SHALL SUPPLY AND PLACE ADDITIONAL SIGNS AND BARRICADES AT THE UNIT BID PRICE.
34. ADVANCE WARNING SIGNS ALONG MAINLINE AND SIDE ROADS SHALL REMAIN IN PLACE FOR DURATION OF PROJECT.
35. ALL VARIABLE MESSAGE SIGNS SHALL BE USED AS DIRECTED BY THE ENGINEER.
36. ALL CONSTRUCTION SIGNS NOT IN USE DURING A PARTICULAR STAGE SHALL BE COVERED OR REMOVED.
37. INLET SEDIMENT TRAPS SHALL BE CONSTRUCTED WHERE SHOWN ON THE CONSTRUCTION PLANS AND MAINTAINED THROUGHOUT CONSTRUCTION.
38. LENGTH FOR SHIFTING TAPER SHALL BE ½ L (MIN.)
39. TAPER LENGTH FOR SHOULDER CLOSING SHALL BE 1/3 L (MIN.)
40. THE MINIMUM UNOBSTRUCTED LANE WIDTH SHALL BE 11'-0". LANE WIDTH IS DEFINED AS THE WIDTH FROM THE EDGE OF DEVICE TO CENTER OF LANE STRIPE ON MAINLINE AND 11'-0" ON RAMPS.
41. REMOVABLE PAVEMENT MARKING TAPE OR OTHER MEANS OF TRAFFIC CONTROL SHALL BE UTILIZED WHERE LANE SHIFTS ARE REQUIRED ON INTERMEDIATE OR TOP PAVEMENT LAYERS OR ON EXISTING PAVEMENTS NOT BEING REPAVED IN THE SUBSEQUENT STAGE OR PHASE.
42. REMOVABLE TRAFFIC MARKINGS SHOULD BE USED ON FINAL SURFACE COURSE.
43. PROPOSED AND TEMPORARY INLET AND MANHOLE CASTINGS SHALL BE CONSTRUCTED AT THE ELEVATION OF THE ADJACENT PAVEMENT AND RESET/RECONSTRUCTED TO FINAL ELEVATION AS SHOWN ON CONSTRUCTION PLANS. THE CONTRACTOR SHALL ESTABLISH INTERIM CASTING ELEVATIONS THAT PROMOTE POSITIVE DRAINAGE.
44. UNLESS OTHERWISE NOTED, ALL PRECAST CONCRETE CURB CONSTRUCTION BARRIER SHALL BE TYPE 4, ALT. A, JOINT CLASS C.
45. THE CONTRACTOR SHALL VERIFY WITH RESIDENT ENGINEER JOINT CLASS REQUIREMENTS FOR PRECAST CONCRETE CONSTRUCTION BARRIER. SEE CONSTRUCTION DETAIL CD-617-4 OR CD-617-5 FOR JOINT CLASS AND ANCHORAGE TREATMENTS.
46. SEE STRUCTURES PLANS FOR SHIELDING INSTALLATION.
47. SEE ITS PLANS FOR FIBER OPTIC EQUIPMENT RELOCATION
48. CONTACT PARSIPPANY-TROY HILLS POLICE DEPARTMENT FOR ALLOWABLE LANE CLOSURE HOURS ON SMITH ROAD.
49. INSTALL 2 PORTABLE VARIABLE MESSAGE SIGNS DURING STAGES 2 AND 3 ON ROUTE 80 EASTBOUND INDICATING TO KEEP RIGHT FOR BEVERWYCK ROAD.
50. INSTALL REAL-TIME WORK ZONE TRAFFIC SYSTEM PROVISIONS AS LISTED IN THE SPECIAL PROVISIONS AND AT THE DIRECTION OF THE RE AND TRAFFIC OPERATIONS NORTH.

TC-1 / TC-28

NEW JERSEY DEPARTMENT OF TRANSPORTATION

TRAFFIC CONTROL AND STAGING PLANS

ROUTE 80 BRIDGES OVER ROUTE 287
NORTHBOUND AND SMITH ROAD
CONTRACT NO. 043003714

DEWBERRY-GOODKIND, INC.
CERTIFICATE OF AUTHORIZATION NO. 24GA28047600

ANTHONY FULCO, P.E.
NJ PROFESSIONAL ENGINEER LICENSE NO. 24GE03993900

Dewberry-Goodkind, Inc.
Bloomfield, N.J.

STATE	FEDERAL PROJECT NO.
N.J.	BR-080-5(094)

STAGE	LOCATION	JOINT CLASS
1	RTE. 80 WB STA. 211+80 TO STA. 230+50	B
	RTE. 80 WB STA. 211+80 TO STA. 221+20	D
	RTE. 80 EB STA. 211+80 TO STA. 228+40	B
2	RTE. 80 WB STA. 213+80 TO STA. 222+30	B
	RTE. 80 WB STA. 213+80 TO STA. 221+20	D
	RTE. 80 WB STA. 222+30 TO STA. 228+20	C
	RTE. 80 WB STA. 228+20 TO STA. 229+40	B
	RTE. 80 EB STA. 212+70 TO STA. 228+40	B
3	RTE. 80 WB STA. 213+80 TO STA. 229+30	B
	RTE. 80 WB STA. 213+80 TO STA. 221+20	D
	RTE. 80 EB STA. 212+63 TO STA. 228+40	D
	RTE. 80 EB STA. 212+63 TO STA. 228+40	B
4	RTE. 80 WB STA. 212+70 TO STA. 219+10	B
	RTE. 80 WB STA. 220+27 TO STA. 229+20	B
	RTE. 80 EB STA. 212+25 TO STA. 229+40	B

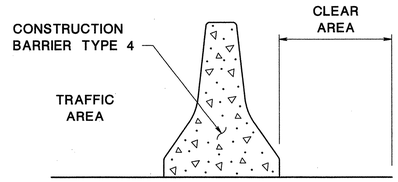

NOTES:

1. CHANGES TO THE PROPOSED JOINT CLASS AT ANY LOCATION MUST BE APPROVED BY THE DEPT.
2. NO ROADWAY DROP OFFS, OBSTRUCTIONS, STORAGE OF MATERIALS OR WORK WILL BE PERMITTED IN THE CLEAR AREA UNLESS APPROVED BY THE R.E.

JOINT CLASS	CLEAR AREA
A	20 INCHES
B	16 INCHES
C	11 INCHES
D	0 INCHES

CONSTRUCTION BARRIER, TYPE 4
JOINT CLASS AND CLEAR AREA

NTS

REGULATORY APPROACH SPEED OF TRAFFIC MILES/HOUR	RECOMMENDED SIGHT DISTANCE TO BEGINNING OF CHANNELIZING TAPERS		
	DESIRABLE		MINIMUM
	RURAL FEET	URBAN FEET	RURAL AND URBAN FEET
25	375	525	150
30	450	625	200
35	525	725	250
40	600	825	325
45	675	925	400
50	750	1025	475
55	875	1150	550
60	1000	1275	650
65	1050		725

NOTES:

1. AVOIDANCE MANEUVER IS FOR A SPEED, PATH, AND/OR DIRECTION CHANGE PRIOR TO THE BEGINNING OF CHANNELIZING TAPERS.
2. RECOMMENDED DISTANCES BETWEEN TWO SEPARATE LANE CLOSURES SHALL BE DOUBLE THE VALUES SHOWN ABOVE.
3. RURAL AND URBAN ROAD DESIGNATIONS SHALL BE AS DEFINED IN THE NJDOT STATE HIGHWAY STRAIGHT LINE DIAGRAMS
4. DESIRABLE VALUES SHALL BE PROVIDED WHEREVER POSSIBLE. IF IT IS NOT FEASIBLE OR PRACTICAL TO PROVIDE DESIRABLE VALUES BECAUSE OF HORIZONTAL OR VERTICAL CURVATURE OR IF RELOCATION OF THE TAPER IS NOT POSSIBLE, THEN MINIMUM VALUES CAN BE APPLIED. WHEN MINIMUM VALUES ARE USED, SPECIAL ATTENTION SHOULD BE GIVEN TO THE USE OF SUITABLE TRAFFIC CONTROL DEVICES FOR PROVIDING ADVANCED WARNING OF THE CONDITIONS THAT ARE LIKELY TO BE ENCOUNTERED.
5. TAPERS SHALL BE LOCATED TO MAXIMIZE THE VISIBILITY OF THEIR TOTAL LENGTH.

RECOMMENDED TAPER LENGTH AND SPACING FOR CHANNELIZING TAPERS						RECOMMENDED SPACING ALONG TANGENTS
REGULATORY APPROACH SPEED OF TRAFFIC IN MILES/HOUR	MINIMUM TAPER RATIO IN LENGTH PER FOOT OF WIDTH	MINIMUM TAPER LENGTH L-FOR LANE WIDTHS 10′	11′	12′	MAXIMUM DEVICE (B) SPACING ALONG TAPERS IN FEET	MAXIMUM DEVICE (D) SPACING ALONG TANGENTS IN FEET
25	10.5:1	105	115	125	25	50
30	15:1	150	165	180	30	60
35	20.5:1	205	225	245	35	70
40	27:1	270	300	325	40	80
45	45:1	450	495	540	45	90
50	50:1	500	550	600	50	100
55	55:1	550	605	660	55	110
60	60:1	600	660	720	60	120
65	65:1	650	715	780	65	130

NOTE:

1. THE MAXIMUM DEVICE SPACING ALONG CURVES SHALL BE AS DEFINED FOR TAPERS (B) IN THE ABOVE TABLE.

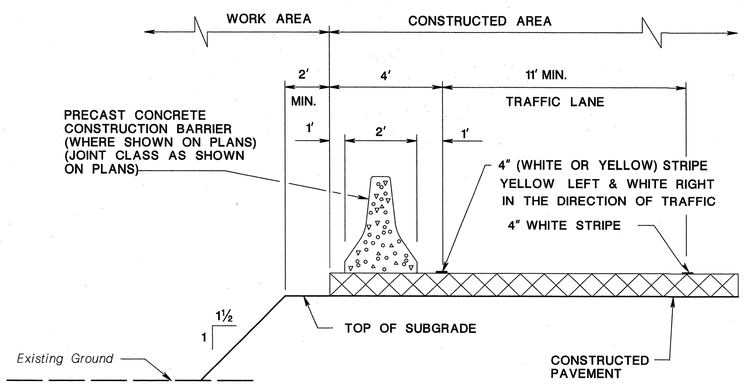

PLACEMENT OF PRECAST CONCRETE CURB CONSTRUCTION BARRIER

NTS

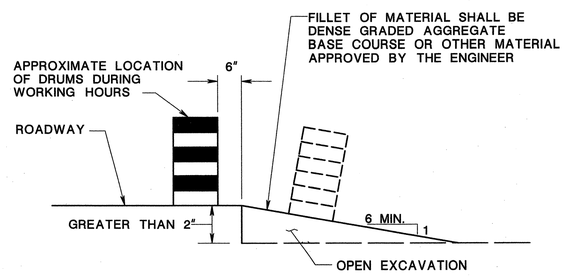

ESCAPE RAMP DETAIL

NTS

NOTE: ESCAPE RAMPS MUST BE CONSTRUCTED AND MAINTAINED DURING NON-WORKING HOURS WHERE A VERTICAL DROP OF GREATER THAN 2" EXISTS ADJACENT TO A TRAVELED LANE.

TC-2 / TC-28

NEW JERSEY DEPARTMENT OF TRANSPORTATION

TRAFFIC CONTROL AND STAGING PLANS

ROUTE 80 BRIDGES OVER ROUTE 287 NORTHBOUND AND SMITH ROAD
CONTRACT NO. 043003714

DEWBERRY-GOODKIND, INC.
CERTIFICATE OF AUTHORIZATION NO. 24GA28047600
8/24/10
ANTHONY FULCO, P.E.
NJ PROFESSIONAL ENGINEER LICENSE NO. 24GE03993900

Dewberry-Goodkind, Inc.
Bloomfield, N.J.

STATE	FEDERAL PROJECT NO.
N.J.	BR-080-5(094)

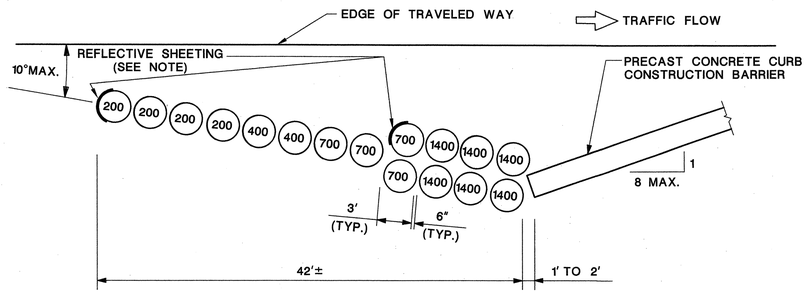

LAYOUT A
(DESIGN SPEED 65 MPH)

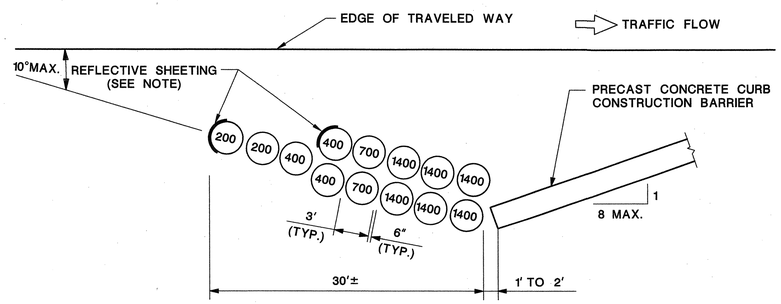

LAYOUT B
(DESIGN SPEED 50 MPH)

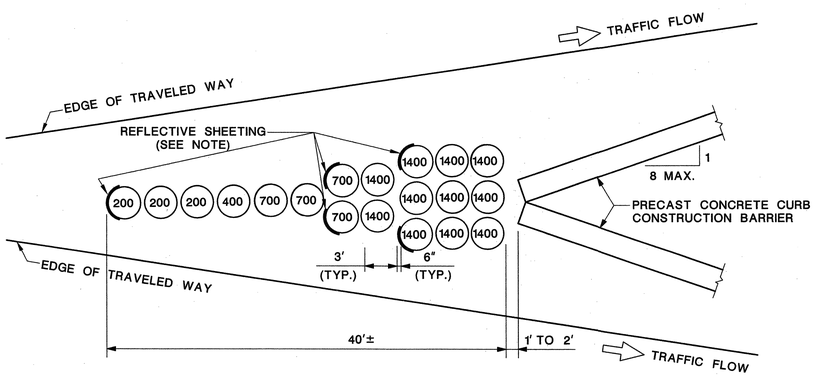

LAYOUT C
(DESIGN SPEED 65 MPH)

TEMPORARY CRASH CUSHION, INERTIAL BARRIER SYSTEM, LAYOUT TYPE A, B & C

NTS

NOTES:

1. SEE REFLECTIVE SHEETING DETAIL FOR APPROPRIATE CROSS HATCHING SCHEME.
2. MODULES SHALL BE PLACED ON PAVEMENT, SLOPES NOT TO EXCEED 5%. EXACT LOCATIONS SHALL BE AS DIRECTED BY THE ENGINEER AND MANUFACTURER'S REPRESENTATIVE.

(XXX) DENOTES WEIGHT OF SAND IN POUNDS

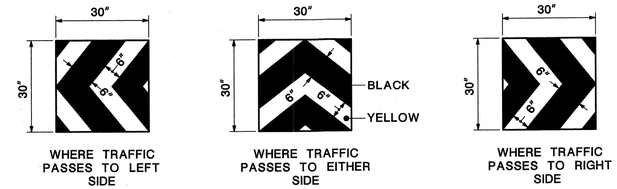

REFLECTIVE SHEETING DETAIL

NTS

NOTE:

AT ALL LOCATIONS WHERE TEMPORARY CRASH CUSHIONS ARE USED, ON THE SMOOTH SURFACE OF THE "BELLY BAND" OF ENERGITE TYPE BARRELS, INSTALL A 30"x30" PIECE OF HIGH INTENSITY, COLD APPLICATION, HI TACK OR SUPER HI TACK SHEETING WITH EITHER OF THE THREE APPROPRIATE CROSS HATCHING SCHEMES SHOWN BELOW, ON "FITCH" TYPE BARRELS, DUE TO THE RIDGED SURFACE, THE SHEETING MAY HAVE TO BE MOUNTED ON "LIGHT" STOCK (0.025") AND BE POP-RIVETED ONTO THE LEAD DRUM. THESE PANELS MAY BE USED ON BEAM GUIDE RAIL ENDS.

CONSTRUCTION SIGN TABLE

SIGN DESIGNATION	MESSAGE	SIZE (IN)			AREA (SF)	REQUIRED QUANTITY	TOTAL AREA (SF)
SIGN A	VEHICLES OVER 10 FEET WIDE USE RIGHT LANE	60	X	30	12.5	2	25.0
SIGN B	1 SHIFT LEFT, 2 SHIFT RIGHT (SYMBOLS)	108	X	48	36.0	4	144.0
SIGN C	VEHICLES OVER 10 FEET WIDE USE LEFT LANE	60	X	30	12.5	2	25.0
SIGN D	2 SHIFT LEFT, 1 SHIFT RIGHT (SYMBOLS)	108	X	48	36.0	2	72.0
E5-1	EXIT (RIGHT SYMBOL)	60	X	48	20.0	1	20.0
G20-2A	END ROAD WORK	48	X	24	8.0	6	48.0
M1-1	INTERSTATE 287	30	X	24	5.0	7	35.0
M3-1	NORTH	24	X	12	2.0	7	14.0
M4-5	TO	24	X	12	2.0	1	2.0
M4-8	DETOUR	30	X	15	3.1	6	18.8
M4-8A	END DETOUR	24	X	18	3.0	1	3.0
M4-10R	DETOUR	48	X	18	6.0	1	6.0
M5-2	RIGHT AHEAD	21	X	15	2.2	1	2.2
M6-1L	LEFT	21	X	15	2.2	1	2.2
M6-2R	RIGHT	21	X	15	2.2	3	6.6
R1-2	YIELD	36	X	TRI	3.9	1	3.9
R11-2	ROAD CLOSED	48	X	30	3.9	2	7.8
W1-4aL(S)	SHIFT LEFT (SYMBOL)	48	X	48	16.0	3	48.0
W1-4aR(S)	SHIFT RIGHT (SYMBOL)	48	X	48	16.0	2	32.0
W1-4bR(S)	2 SHIFT RIGHT (SYMBOL)	48	X	48	16.0	1	16.0
W1-4cL(S)	3 SHIFT LEFT (SYMBOL)	48	X	48	16.0	1	16.0
W(NJ)9-3	RIGHT LANE FOR EXIT ONLY	84	X	42	24.5	2	49.0
W1-4cL(MOD)	3 SHIFT LEFT (SYMBOL)	84	X	48	28.0	4	112.0
W1-4cR(MOD)	3 SHIFT RIGHT (SYMBOL)	84	X	48	28.0	4	112.0
W1-6	ARROW (LEFT OR RIGHT)	48	X	24	8.0	27	216.0
W1-7	TWO-DIRECTION LARGE ARROW	48	X	24	8.0	2	16.0
W3-2a	YIELD AHEAD	48	X	48	16.0	1	16.0
W4-1(S)	RIGHT MERGE SYMBOL	48	X	48	16.0	3	48.0
W4-2L(S)	MERGE SYMBOL (LEFT)	48	X	48	16.0	6	96.0
W4-2R(S)	MERGE SYMBOL (RIGHT)	48	X	48	16.0	3	48.0
W9-3a	CENTER CLOSED	48	X	48	16.0	2	32.0
W12-1	LEFT OR RIGHT	24	X	24	4.0	1	4.0
W20-1A	ROAD WORK 1500 FT	48	X	48	16.0	2	32.0
W20-1D	ROAD WORK 2 MILE	48	X	48	16.0	7	112.0
W20-1D	ROAD WORK 1 MILE	48	X	48	16.0	12	192.0
W20-1D	ROAD WORK 1/2 MILE	48	X	48	16.0	14	224.0
W20-1F	ROAD WORK AHEAD	48	X	48	16.0	6	96.0
W20-1C	ROAD WORK 500 FT	48	X	48	16.0	1	16.0
W20-2C	DETOUR 500 FT	48	X	48	16.0	2	32.0
W20-3F	ROAD CLOSED AHEAD	48	X	48	16.0	2	32.0
W20-4F	SINGLE LANE AHEAD	48	X	48	16.0	2	32.0
W20-5D	RIGHT TWO LANES CLOSED 3/4 MILE	48	X	48	16.0	2	32.0
W20-5AR	RIGHT LANE CLOSED 1500 FT	48	X	48	16.0	2	32.0
W20-5AL	LEFT LANE CLOSED 1500 FT	48	X	48	16.0	5	80.0
W20-5BR	RIGHT LANE CLOSED 1000 FT	48	X	48	16.0	2	32.0
W20-5BL	LEFT LANE CLOSED 1000 FT	48	X	48	16.0	5	80.0
W50-1C	EXIT 500 FT	60	X	48	20.0	1	20.0
W99-2	GIVE US A BRAKE	48	X	48	16.0	2	32.0
W100-1R	ALL EXITING TRAFFIC KEEP RIGHT	48	X	48	16.0	1	16.0
						TOTAL	2,388

TC-3 / TC-28

NEW JERSEY DEPARTMENT OF TRANSPORTATION

TRAFFIC CONTROL DETAILS

ROUTE 80 BRIDGES OVER ROUTE 287
NORTHBOUND AND SMITH ROAD
CONTRACT NO. 043003714

DEWBERRY-GOODKIND, INC.
CERTIFICATE OF AUTHORIZATION NO. 24GA28047600

8/24/10

ANTHONY FULCO, P.E.
NJ PROFESSIONAL ENGINEER LICENSE NO. 24GE03993900

Dewberry-Goodkind, Inc.
Bloomfield, N.J.

STATE	FEDERAL PROJECT NO.
N.J.	BR-080-5(094)

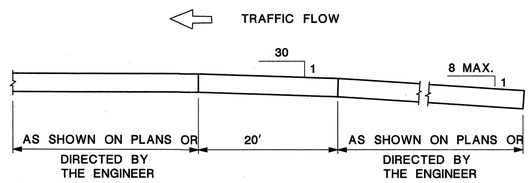

PRECAST CONCRETE CURB CONSTRUCTION BARRIER END TREATMENT

NTS

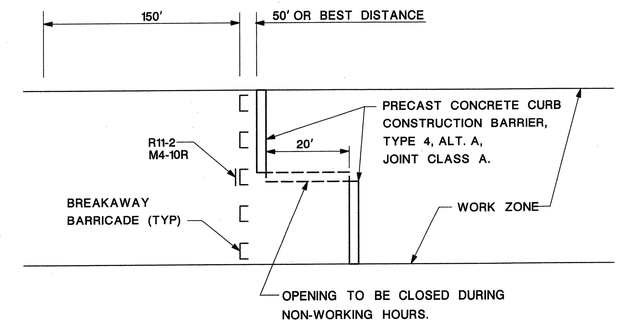

POSITIVE CLOSURE DETAIL

NTS

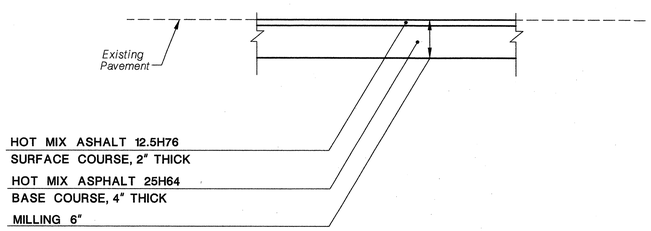

MILLING AND RESURFACING

NTS

(SEE TRAFFIC CONTROL PLANS FOR LOCATION)

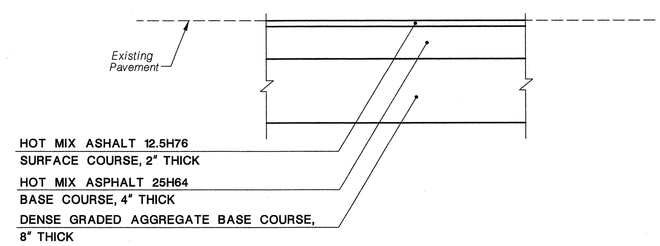

TEMPORARY PAVEMENT

NTS

(SEE TRAFFIC CONTROL PLANS FOR LOCATION)

TC-4 / TC-28

NEW JERSEY DEPARTMENT OF TRANSPORTATION

TRAFFIC CONTROL DETAILS

ROUTE 80 BRIDGES OVER ROUTE 287
NORTHBOUND AND SMITH ROAD
CONTRACT NO. 043003714

DEWBERRY-GOODKIND, INC.
CERTIFICATE OF AUTHORIZATION NO. 24GA28047600
8/24/10
ANTHONY FULCO, P.E.
NJ PROFESSIONAL ENGINEER LICENSE NO. 24GE03993900

21
129

Dewberry-Goodkind, Inc.
Bloomfield, N.J.

apisani 8/24/2010 9:03:08 AM OceTDS700-BW.plt 30-scale 3056-REDECKING-Route80-287-V8 Q:\3056\Redecking\CAD\Civil\PLANS\TC\[TC-04]_ACTC3056_D.dgn

STATE	FEDERAL PROJECT NO.
N.J.	BR-080-5(094)

TOWNSHIP OF PARSIPPANY - TROY HILLS

1"=300' 300 0 300 600

COUNTY OF MORRIS

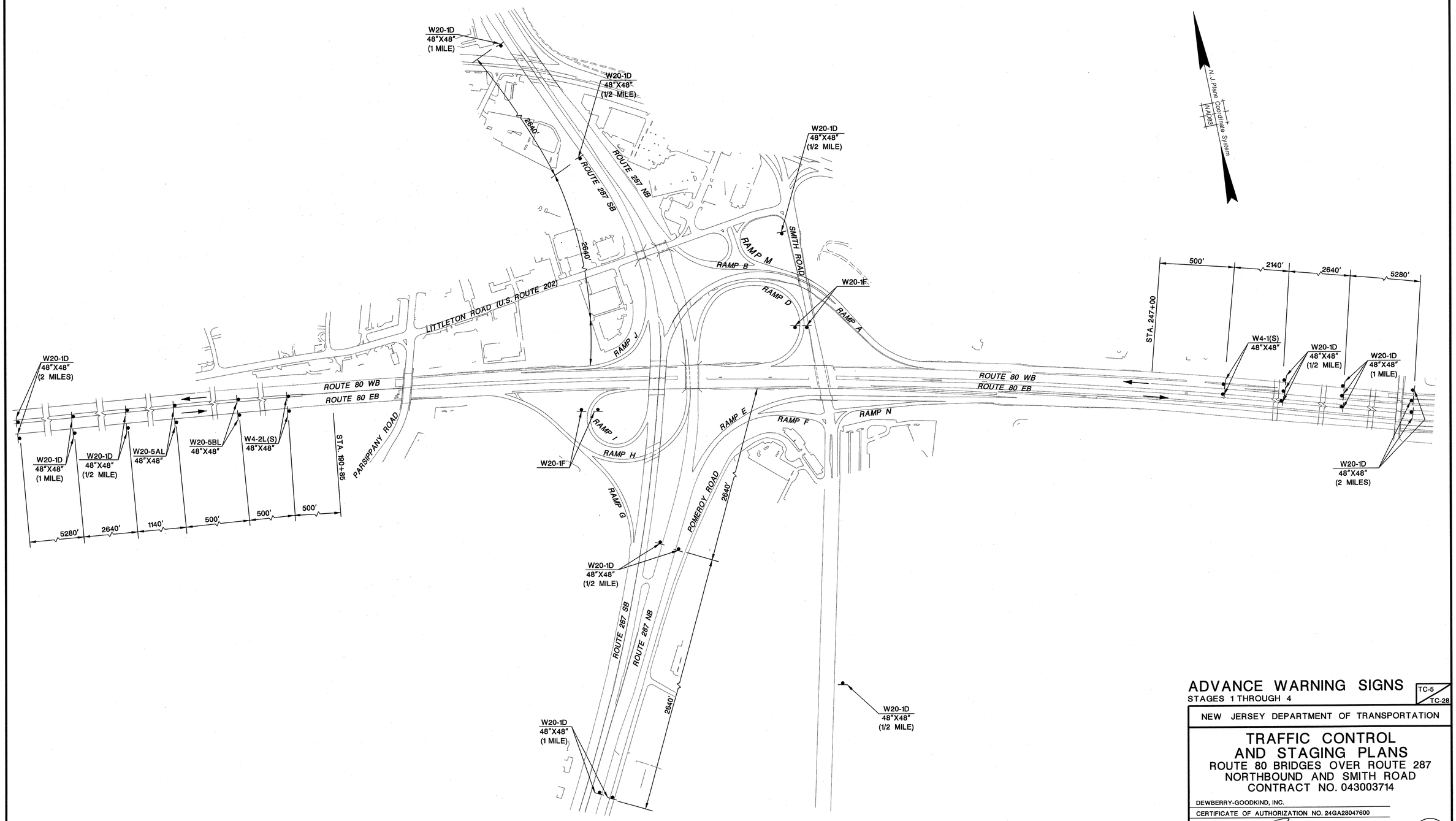

ADVANCE WARNING SIGNS

STAGES 1 THROUGH 4

TC-5 / TC-28

NEW JERSEY DEPARTMENT OF TRANSPORTATION

TRAFFIC CONTROL AND STAGING PLANS

ROUTE 80 BRIDGES OVER ROUTE 287
NORTHBOUND AND SMITH ROAD
CONTRACT NO. 043003714

DEWBERRY-GOODKIND, INC.

CERTIFICATE OF AUTHORIZATION NO. 24GA28047600

ANTHONY FULCO, P.E. 8/24/10

NJ PROFESSIONAL ENGINEER LICENSE NO. 24GE03993900

22 / 129

Dewberry-Goodkind, Inc.
Bloomfield, N.J.

apisani 8/24/2010 9:03:14 AM OceTDS700-BW.plt 30-scale 3056-REDECKING-Route80-287-V8 Q:\3056\Redecking\CAD\Civil\PLANS\TC\[TC-05]_ACTC3056_AWS.dgn

STATE	FEDERAL PROJECT NO.
N.J.	BR-080-5(094)

TOWNSHIP OF PARSIPPANY - TROY HILLS

1"=50' 50 0 50 100

COUNTY OF MORRIS

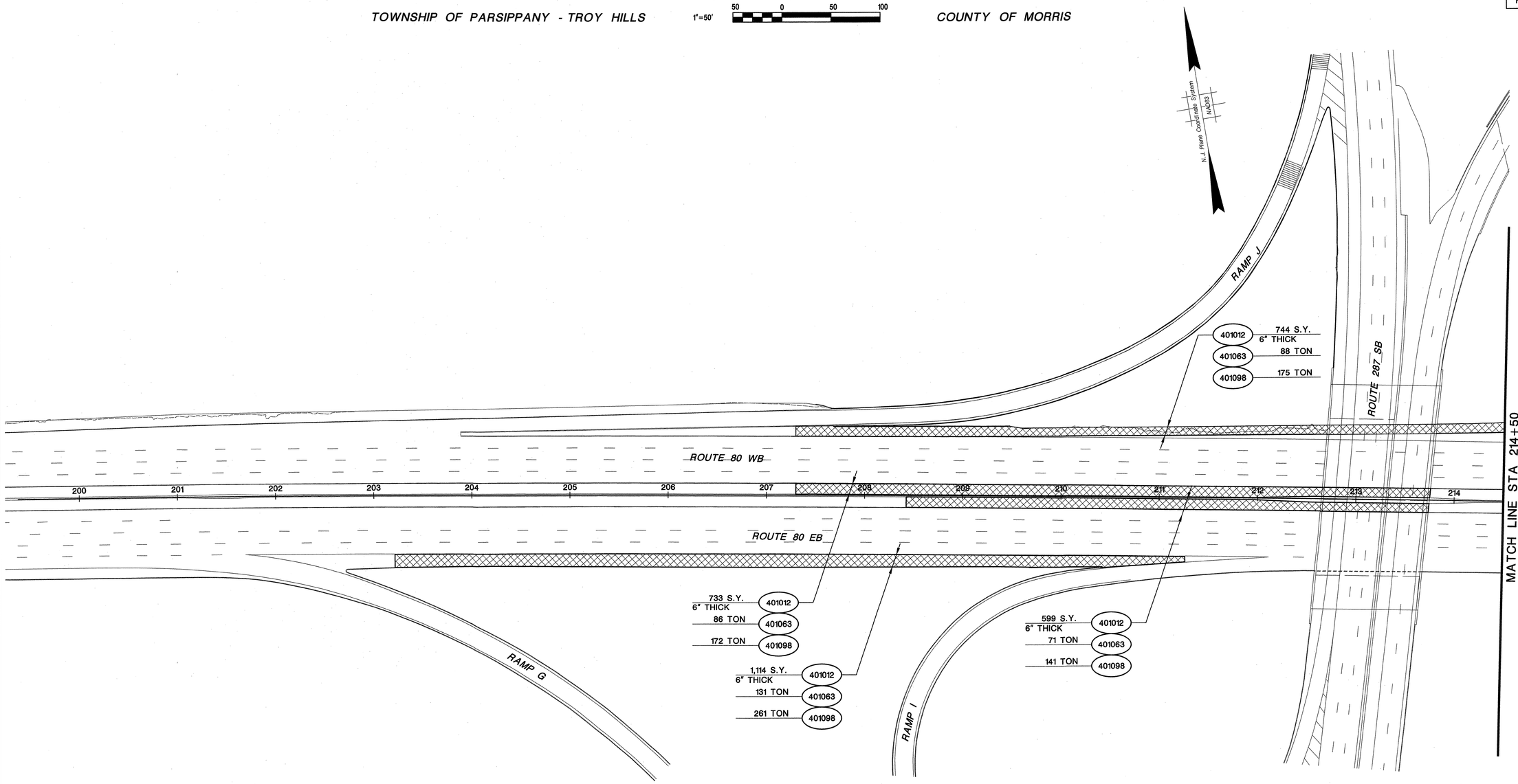

ITEM NO.	TO BE CONSTRUCTED	CONTRACT QUANTITY
401012P	HMA MILLING, MORE THAN 3" TO 6"	3,190 S.Y.
401063M	HOT MIX ASPHALT 12.5 H 76 SURFACE COURSE	376 TON
401098M	HOT MIX ASPHALT 25 H 64 BASE COURSE	749 TON

PRE-STAGE 1

1. INSTALL REAL-TIME WORK ZONE TRAFFIC SYSTEM.
2. REPLACE EXISTING RAILING WITH TEMPORARY SINGLE FACED CONCRETE BARRIER CURB (BRIDGE 2)
3. MILL AND RESURFACE SHOULDERS UTILIZING NJDOT STANDARD DETAIL, TCD-15(LEFT LANE), TCD-16(RIGHT TWO LANES CLOSING), TCD-18(RIGHT SHOULDER) AND (LEFT GORE) ON ROUTE 80 EB AND TCD-14(RIGHT LANE AND SHOULDER CLOSING), TCD-15(LEFT LANE), TCD-20 (RIGHT) AND TCD-21(RIGHT) ON ROUTE 80 WB

LEGEND

MILL AND OVERLAY

PRE-STAGE 1

TC-6 / TC-28

NEW JERSEY DEPARTMENT OF TRANSPORTATION

TRAFFIC CONTROL AND STAGING PLANS

ROUTE 80 BRIDGES OVER ROUTE 287 NORTHBOUND AND SMITH ROAD

CONTRACT NO. 043003714

DEWBERRY-GOODKIND, INC.

CERTIFICATE OF AUTHORIZATION NO. 24GA28047600

8/24/10

ANTHONY FULCO, P.E.

NJ PROFESSIONAL ENGINEER LICENSE NO. 24GE03993900

Dewberry-Goodkind, Inc.
Bloomfield, N.J.

apisani 8/24/2010 9:03:22 AM OceTDS700-BW.plt 30-scale 3056-REDECKING-Route80-287-V8 Q:\3056\Redecking\CAD\Civil\PLANS\TC\ACTC3056_PRE_S1_01.dgn

STATE	FEDERAL PROJECT NO.
N.J.	BR-080-5(094)

TOWNSHIP OF PARSIPPANY - TROY HILLS

1"=50' 50 0 50 100

COUNTY OF MORRIS

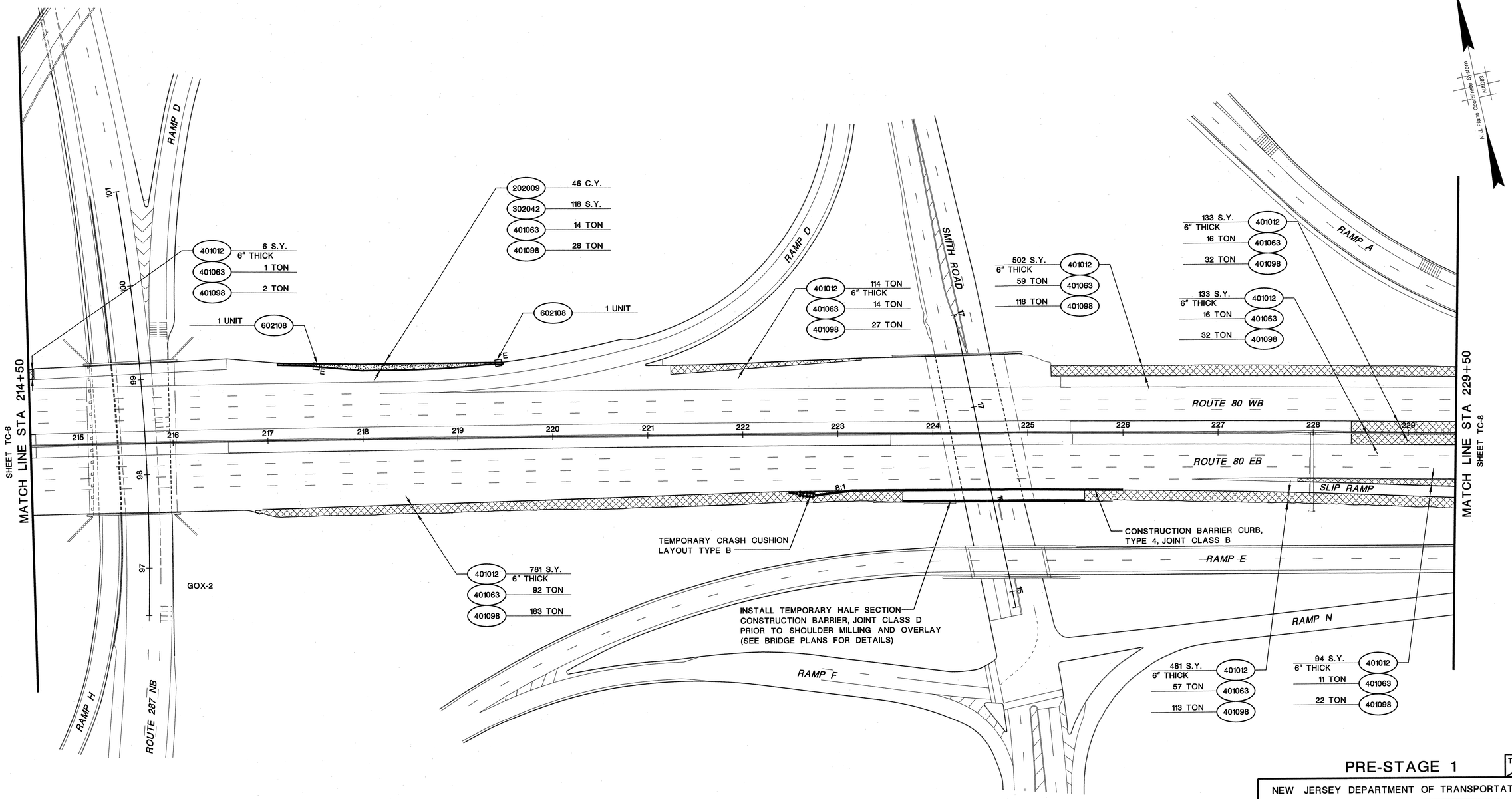

ITEM NO.	TO BE CONSTRUCTED	CONTRACT QUANTITY
202009P	EXCAVATION, UNCLASSIFIED	46 C.Y.
302042P	DENSE-GRADED AGGREGATE BASE COURSE, 8" THICK	118 S.Y.
401012P	HMA MILLING, MORE THAN 3" TO 6"	2,244 S.Y.
401063M	HOT MIX ASPHALT 12.5 H 76 SURFACE COURSE	280 TON
401098M	HOT MIX ASPHALT 25 H 64 BASE COURSE	557 TON
602108M	SET INLET TYPE E, CASTING	2 UNIT

LEGEND

MILL AND OVERLAY

TEMPORARY PAVEMENT

PRE-STAGE 1

TC-7 / TC-28

NEW JERSEY DEPARTMENT OF TRANSPORTATION

TRAFFIC CONTROL AND STAGING PLANS

ROUTE 80 BRIDGES OVER ROUTE 287
NORTHBOUND AND SMITH ROAD
CONTRACT NO. 043003714

DEWBERRY-GOODKIND, INC.
CERTIFICATE OF AUTHORIZATION NO. 24GA28047600

8/24/10

ANTHONY FULCO, P.E.
NJ PROFESSIONAL ENGINEER LICENSE NO. 24GE03993900

Dewberry-Goodkind, Inc.
Bloomfield, N.J.

apisani 8/24/2010 9:03:29 AM OceTDS700-BW.plt 30-scale 3056-REDECKING-Route80-287-V8 Q:\3056\Redecking\CAD\Civil\PLANS\TC\ACTC3056_PRE_S1_02.dgn

STATE	FEDERAL PROJECT NO.
N.J.	BR-080-5(094)

TOWNSHIP OF PARSIPPANY - TROY HILLS

1"=50' 50 0 50 100

COUNTY OF MORRIS

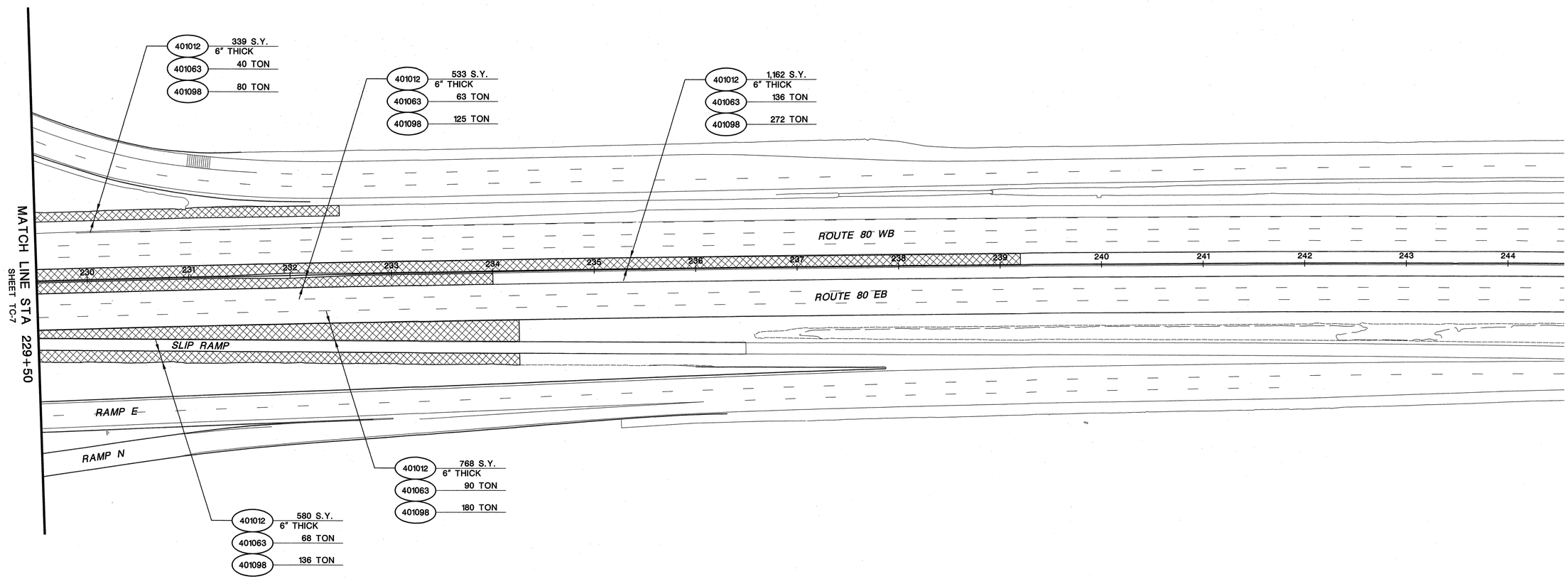

ITEM NO.	TO BE CONSTRUCTED	CONTRACT QUANTITY
401012P	HMA MILLING, MORE THAN 3" TO 6"	3,382 S.Y.
401063M	HOT MIX ASPHALT 12.5 H 76 SURFACE COURSE	397 TON
401098M	HOT MIX ASPHALT 25 H 64 BASE COURSE	793 TON

LEGEND

MILL AND OVERLAY

PRE-STAGE 1

TC-8 / TC-28

NEW JERSEY DEPARTMENT OF TRANSPORTATION

TRAFFIC CONTROL AND STAGING PLANS

ROUTE 80 BRIDGES OVER ROUTE 287
NORTHBOUND AND SMITH ROAD
CONTRACT NO. 043003714

DEWBERRY-GOODKIND, INC.
CERTIFICATE OF AUTHORIZATION NO. 24GA28047600

8/24/10

ANTHONY FULCO, P.E.
NJ PROFESSIONAL ENGINEER LICENSE NO. 24GE03993900

25
129

Dewberry-Goodkind, Inc.
Bloomfield, N.J.

apisani 8/24/2010 9:03:36 AM OceTDS700-BW.plt 30-scale 3056-REDECKING-Route80-287-V8 Q:\3056\Redecking\CAD\Civil\PLANS\TC\ACTC3056_PRE_S1_03.dgn

STATE	FEDERAL PROJECT NO.
N.J.	BR-080-5(094)

TOWNSHIP OF PARSIPPANY - TROY HILLS

1"=50'

50 0 50 100

COUNTY OF MORRIS

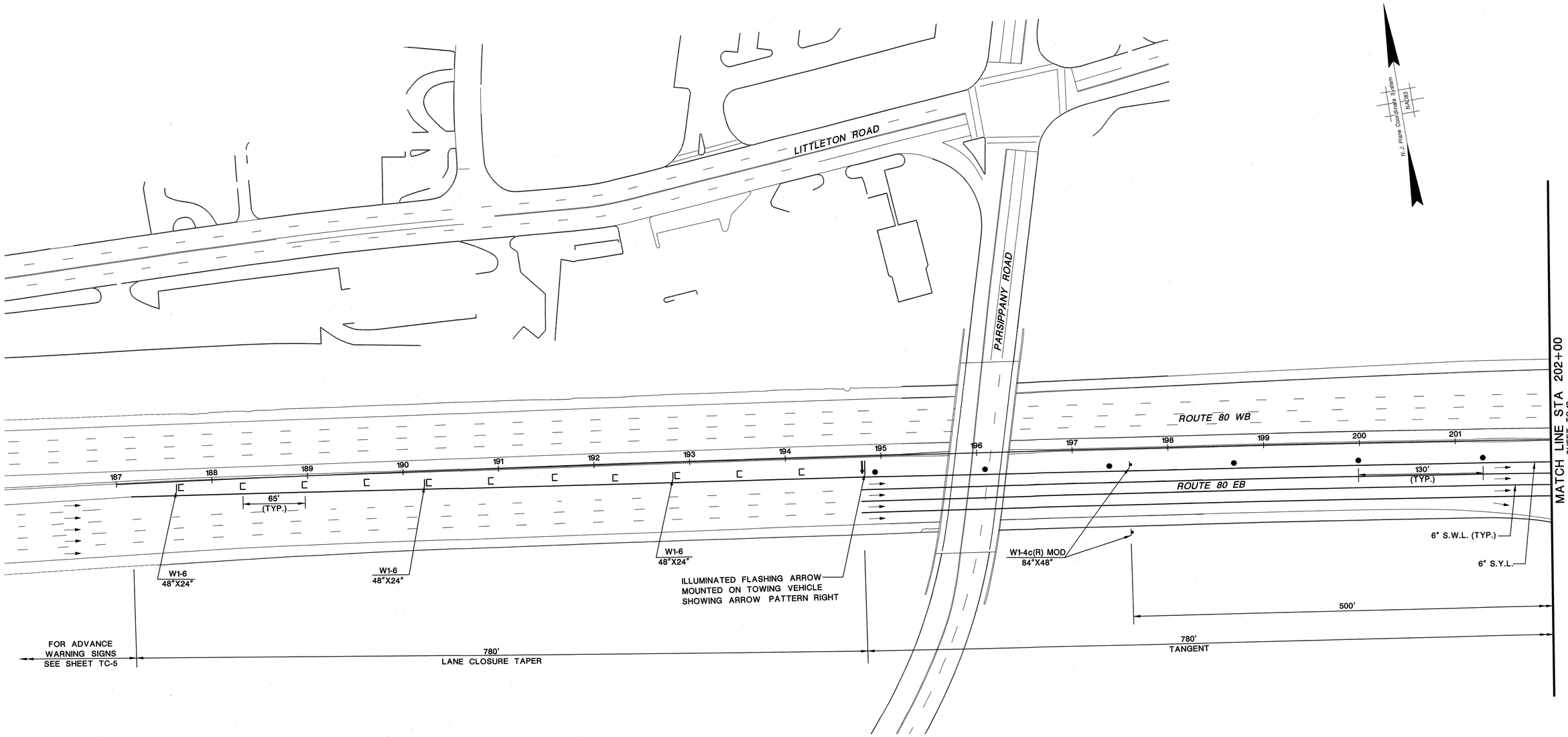

STAGE 1

1. INSTALL CONDUIT UNDER RT 287 NB AND OTHER ITS FACILITIES.
2. INSTALL TEMPORARY SHIELDING UTILIZING NJDOT STANDARD DETAIL TCD- 14, TCD- 15, TCD- 17, TCD- 18 ON ROUTE 287NB AND TCD- 8, TCD- 9, TCD- 11, TCD- 12, TCD- 13 ON SMITH ROAD AND DETOUR PLAN FOR RAMP H CLOSURE.
3. INSTALL TRAFFIC CONTROL DEVICES AND SHIFT TRAFFIC ON ROUTE 80.
4. DEMOLISH CENTER PORTION OF BRIDGE DECKS AND CENTER MEDIAN.
5. CONSTRUCT CENTER PORTION OF BRIDGE DECKS, MEDIAN, APPROACH ROADWAY AND CONCRETE BARRIER CURB.
6. SEE BRIDGE PLANS FOR TEMPORARY SHEETING LOCATIONS.

LEGEND

WORK ZONE

STAGE 1

TC-9 / TC-28

NEW JERSEY DEPARTMENT OF TRANSPORTATION

TRAFFIC CONTROL AND STAGING PLANS

ROUTE 80 BRIDGES OVER ROUTE 287 NORTHBOUND AND SMITH ROAD
CONTRACT NO. 043003714

DEWBERRY-GOODKIND, INC.
CERTIFICATE OF AUTHORIZATION NO. 24GA28047600

ANTHONY FULCO, P.E.
NJ PROFESSIONAL ENGINEER LICENSE NO. 24GE03993900

26
129

Dewberry-Goodkind, Inc.
Bloomfield, N.J.

apisani 8/24/2010 9:03:44 AM OceTDS700-BW.plt 30-scale 3056-REDECKING-Route80-287-V8 Q:\3056\Redecking\CAD\Civil\PLANS\TC\ACTC3056_S1_01A.dgn

STATE	FEDERAL PROJECT NO.
N.J.	BR-080-5(094)

TOWNSHIP OF PARSIPPANY - TROY HILLS

1"=50' 50 0 50 100

COUNTY OF MORRIS

ITEM NO.	TO BE CONSTRUCTED	CONTRACT QUANTITY
401012P	HMA MILLING, MORE THAN 3" TO 6"	180 S.Y.
401063M	HOT MIX ASPHALT 12.5 H 76 SURFACE COURSE	22 TON
401098M	HOT MIX ASPHALT 25 H 64 BASE COURSE	43 TON

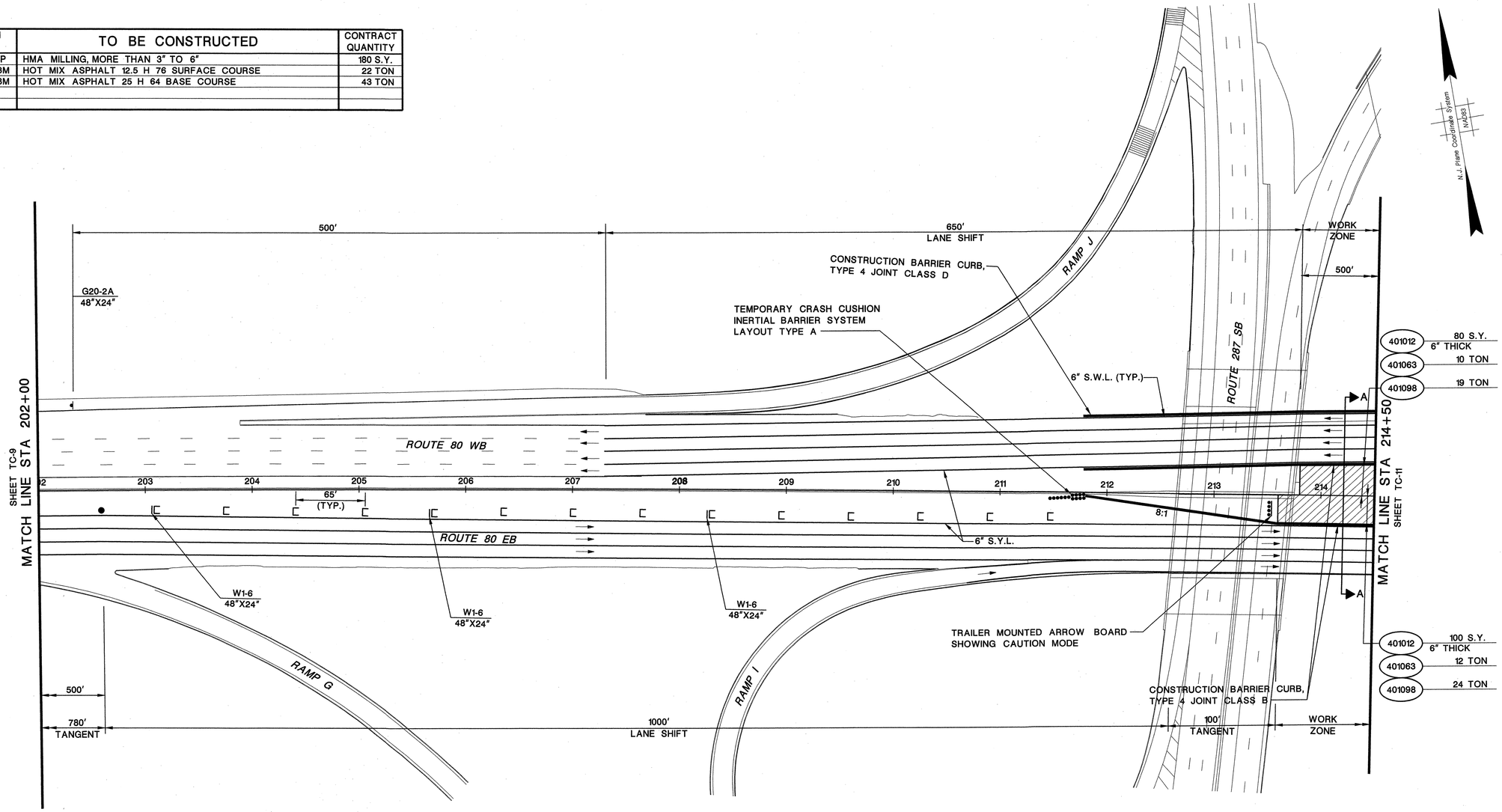

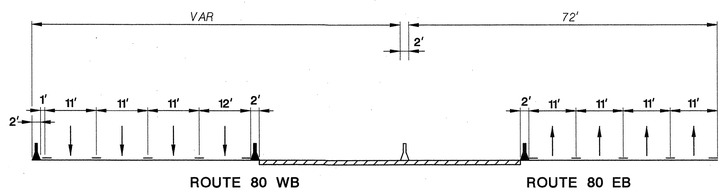

SECTION A-A

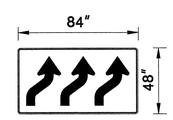

W1-4c(R) (MOD)
BLACK ON ORANGE

LEGEND

WORK ZONE

STAGE 1

TC-10 / TC-28

NEW JERSEY DEPARTMENT OF TRANSPORTATION

TRAFFIC CONTROL AND STAGING PLANS

ROUTE 80 BRIDGES OVER ROUTE 287 NORTHBOUND AND SMITH ROAD

CONTRACT NO. 043003714

DEWBERRY-GOODKIND, INC.

CERTIFICATE OF AUTHORIZATION NO. 24GA28047600

ANTHONY FULCO, P.E. 8/24/10

NJ PROFESSIONAL ENGINEER LICENSE NO. 24GE03993900

27 / 129

Dewberry-Goodkind, Inc.
Bloomfield, N.J.

apisani 8/24/2010 9:03:52 AM OceTDS700-BW.plt 30-scale 3056-REDECKING-Route80-287-V8 Q:\3056\Redecking\CAD\Civil\PLANS\TC\ACTC3056_S1_01.dgn

STATE	FEDERAL PROJECT NO.
N.J.	BR-080-5(094)

TOWNSHIP OF PARSIPPANY - TROY HILLS

1"=50' 50 0 50 100

COUNTY OF MORRIS

ITEM NO.	TO BE CONSTRUCTED	CONTRACT QUANTITY
401012P	HMA MILLING, MORE THAN 3" TO 6"	2,409 S.Y.
401063M	HOT MIX ASPHALT 12.5 H 76 SURFACE COURSE	284 TON
401098M	HOT MIX ASPHALT 25 H 64 BASE COURSE	567 TON

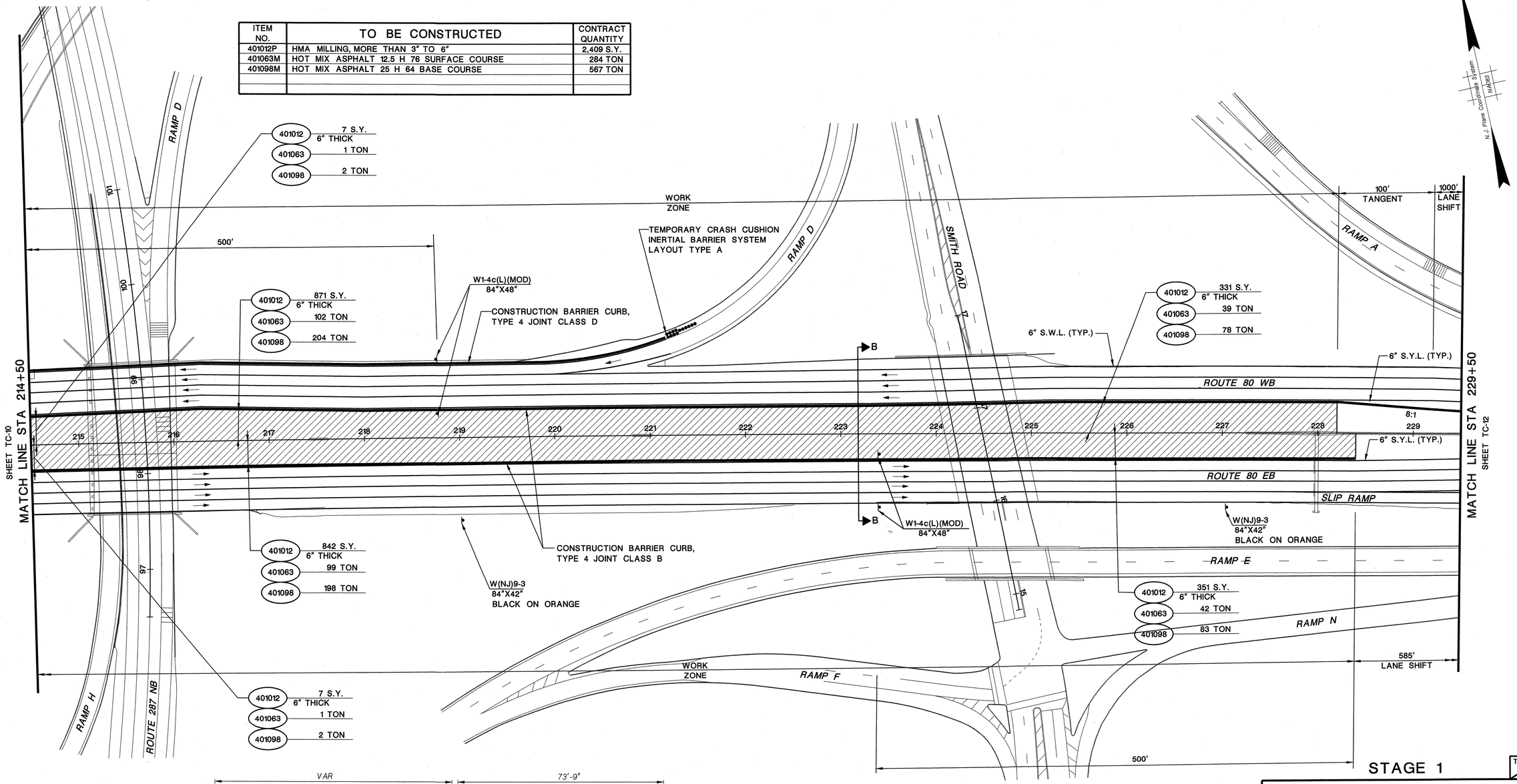

STAGE 1

TC-11 / TC-28

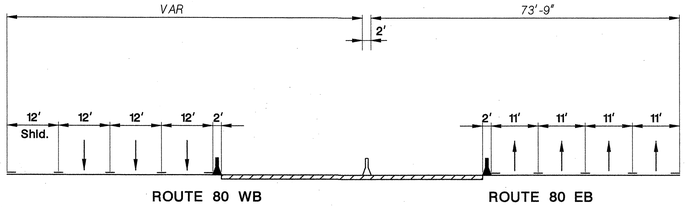

SECTION B-B

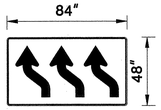

W1-4c(L) (MOD)
BLACK ON ORANGE

LEGEND

WORK ZONE

NEW JERSEY DEPARTMENT OF TRANSPORTATION

TRAFFIC CONTROL AND STAGING PLANS

ROUTE 80 BRIDGES OVER ROUTE 287
NORTHBOUND AND SMITH ROAD
CONTRACT NO. 043003714

DEWBERRY-GOODKIND, INC.
CERTIFICATE OF AUTHORIZATION NO. 24GA28047600

ANTHONY FULCO, P.E.
NJ PROFESSIONAL ENGINEER LICENSE NO. 24GE03993900

Dewberry-Goodkind, Inc.
Bloomfield, N.J.

apisani 8/24/2010 9:03:59 AM OceTDS700-BW.plt 30-scale 3056-REDECKING-Route80-287-V8 Q:\3056\Redecking\CAD\Civil\PLANS\TC\ACTC3056_S1_02.dgn

STATE	FEDERAL PROJECT NO.
N.J.	BR-080-5(094)

TOWNSHIP OF PARSIPPANY - TROY HILLS

1"=50'

50 0 50 100

COUNTY OF MORRIS

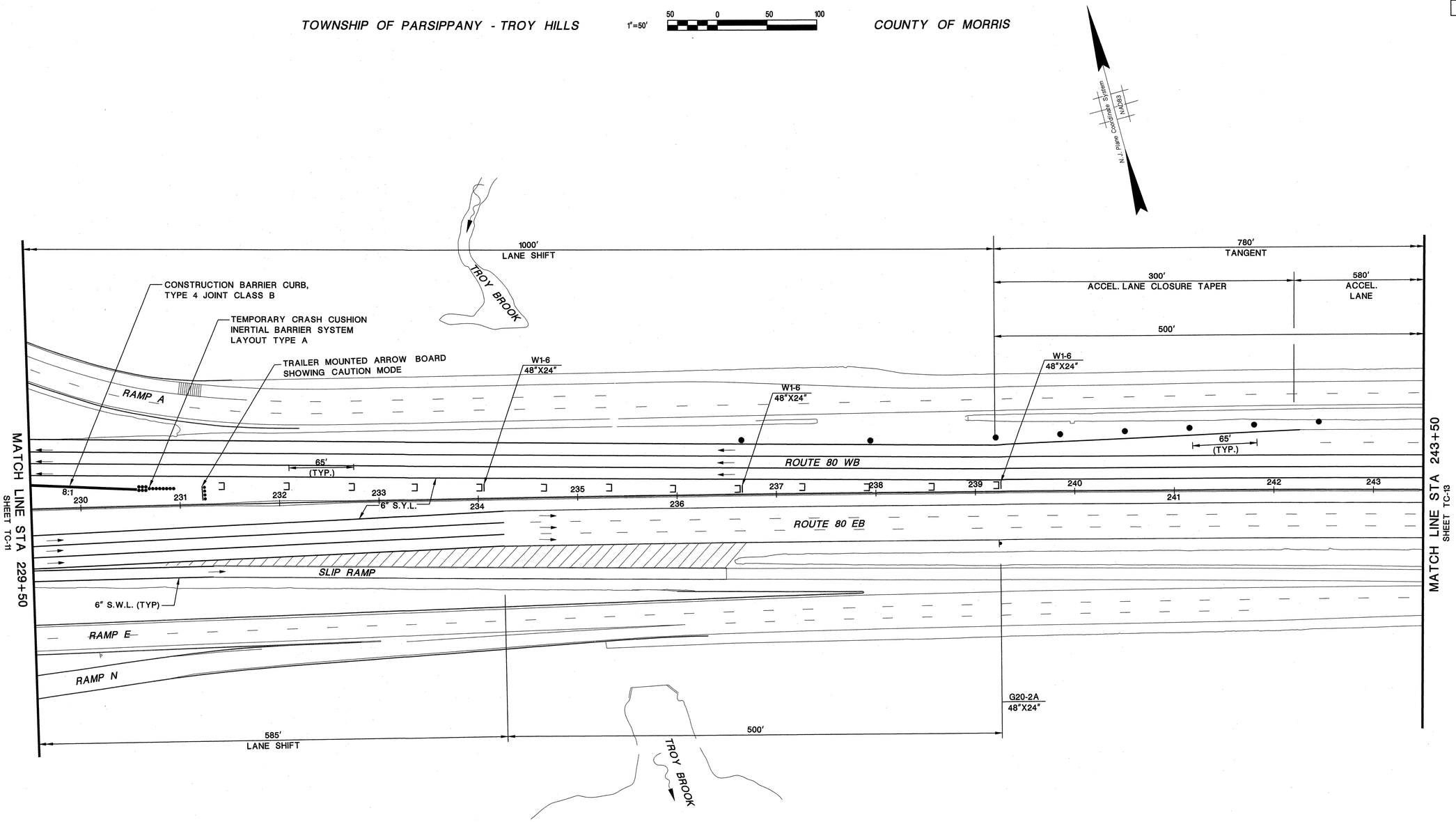

LEGEND

WORK ZONE

STAGE 1

TC-12
TC-28

NEW JERSEY DEPARTMENT OF TRANSPORTATION

TRAFFIC CONTROL AND STAGING PLANS

ROUTE 80 BRIDGES OVER ROUTE 287
NORTHBOUND AND SMITH ROAD
CONTRACT NO. 043003714

DEWBERRY-GOODKIND, INC.
CERTIFICATE OF AUTHORIZATION NO. 24GA28047600

8/24/10

ANTHONY FULCO, P.E.
NJ PROFESSIONAL ENGINEER LICENSE NO. 24GE03993900

29
129

Dewberry-Goodkind, Inc.
Bloomfield, N.J.

apisani 8/24/2010 9:04:06 AM OceTDS700-BW.plt 30-scale 3056-REDECKING-Route80-287-V8 Q:\3056\Redecking\CAD\Civil\PLANS\TC\ACTC3056_S1_03.dgn

STATE	FEDERAL PROJECT NO.
N.J.	BR-080-5(094)

TOWNSHIP OF PARSIPPANY - TROY HILLS

1"=50' 50 0 50 100

COUNTY OF MORRIS

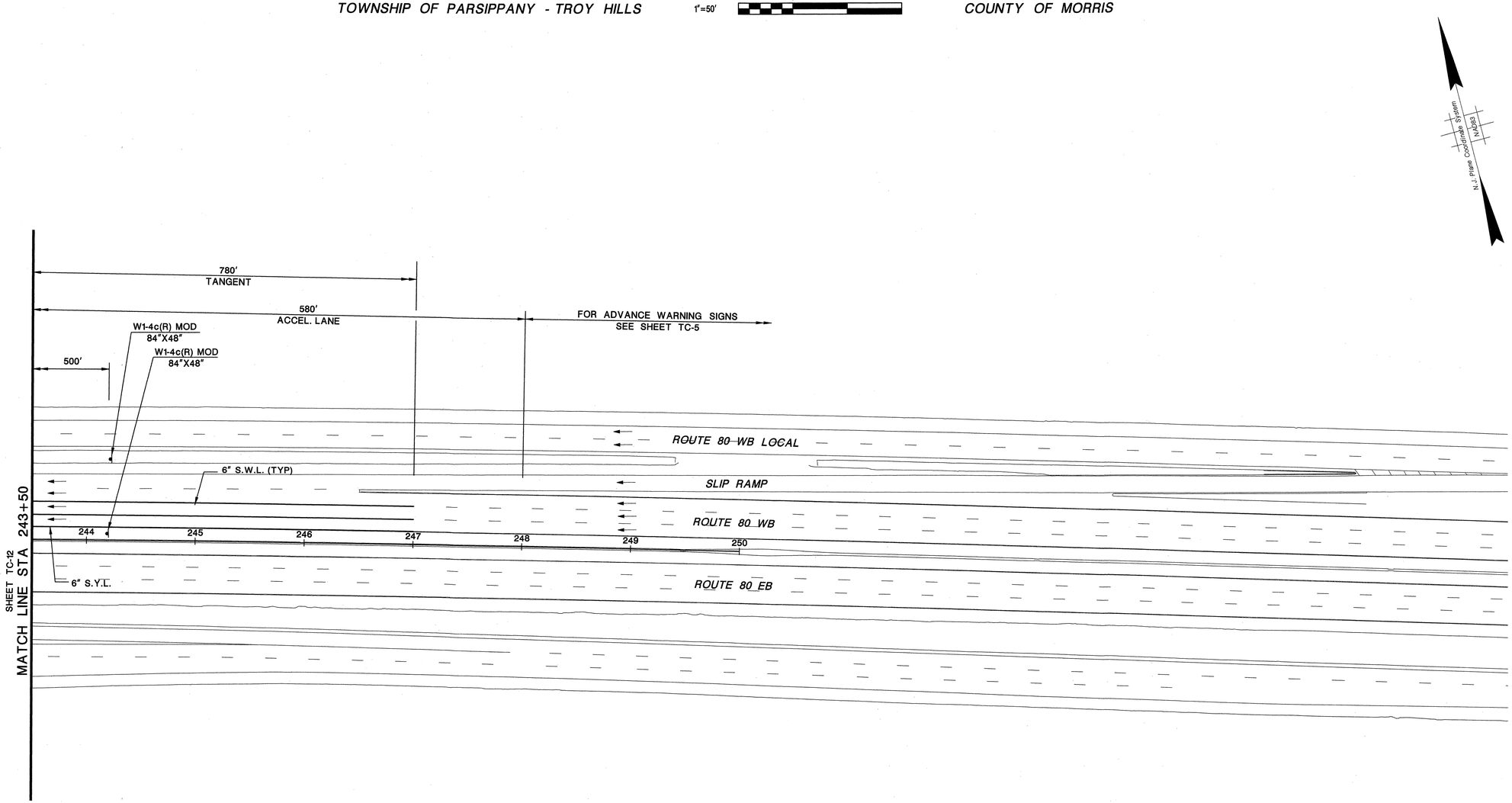

LEGEND

WORK ZONE

STAGE 1

TC-13
TC-28

NEW JERSEY DEPARTMENT OF TRANSPORTATION

TRAFFIC CONTROL AND STAGING PLANS

ROUTE 80 BRIDGES OVER ROUTE 287
NORTHBOUND AND SMITH ROAD
CONTRACT NO. 043003714

DEWBERRY-GOODKIND, INC.
CERTIFICATE OF AUTHORIZATION NO. 24GA28047600

ANTHONY FULCO, P.E.
NJ PROFESSIONAL ENGINEER LICENSE NO. 24GE03993900

30
129

Dewberry-Goodkind, Inc.
Bloomfield, N.J.

apisani 8/24/2010 9:04:12 AM OceTDS700-BW.plt 30-scale 3056-REDECKING-Route80-287-V8 Q:\3056\Redecking\CAD\Civil\PLANS\TC\ACTC3056_S1_04.dgn

STATE	FEDERAL PROJECT NO.
N.J.	BR-080-5(094)

TOWNSHIP OF PARSIPPANY - TROY HILLS

1"=50'

50 0 50 100

COUNTY OF MORRIS

STAGE 2

1. INSTALL TEMPORARY SHIELDING UTILIZING NJDOT STANDARD DETAIL TCD- 14, TCD- 15, TCD- 17, TCD- 18 ON ROUTE 287NB AND TCD- 8, TCD- 9, TCD- 11, TCD- 12, TCD- 13 ON SMITH ROAD AND DETOUR PLAN FOR RAMP H CLOSURE.
2. RECONFIGURE TRAFFIC CONTROL DEVICES
3. INSTALL 2 PORTABLE VARIABLE MESSAGE SIGNS ON ROUTE 80 EASTBOUND INDICATING TO KEEP RIGHT FOR BEVERWYCK ROAD.
4. USE TEMPORARY PAVEMENT MARKING TAPE ON RECONSTRUCTED BRIDGE DECKS AND APPROACH SLABS
5. REMOVE PORTION OF EXISTING BRIDGE DECK.
6. CONSTRUCT NEW DECK AND APPROACH ROADWAY.
7. SEE BRIDGE PLANS FOR TEMPORARY SHEETING LOCATIONS.

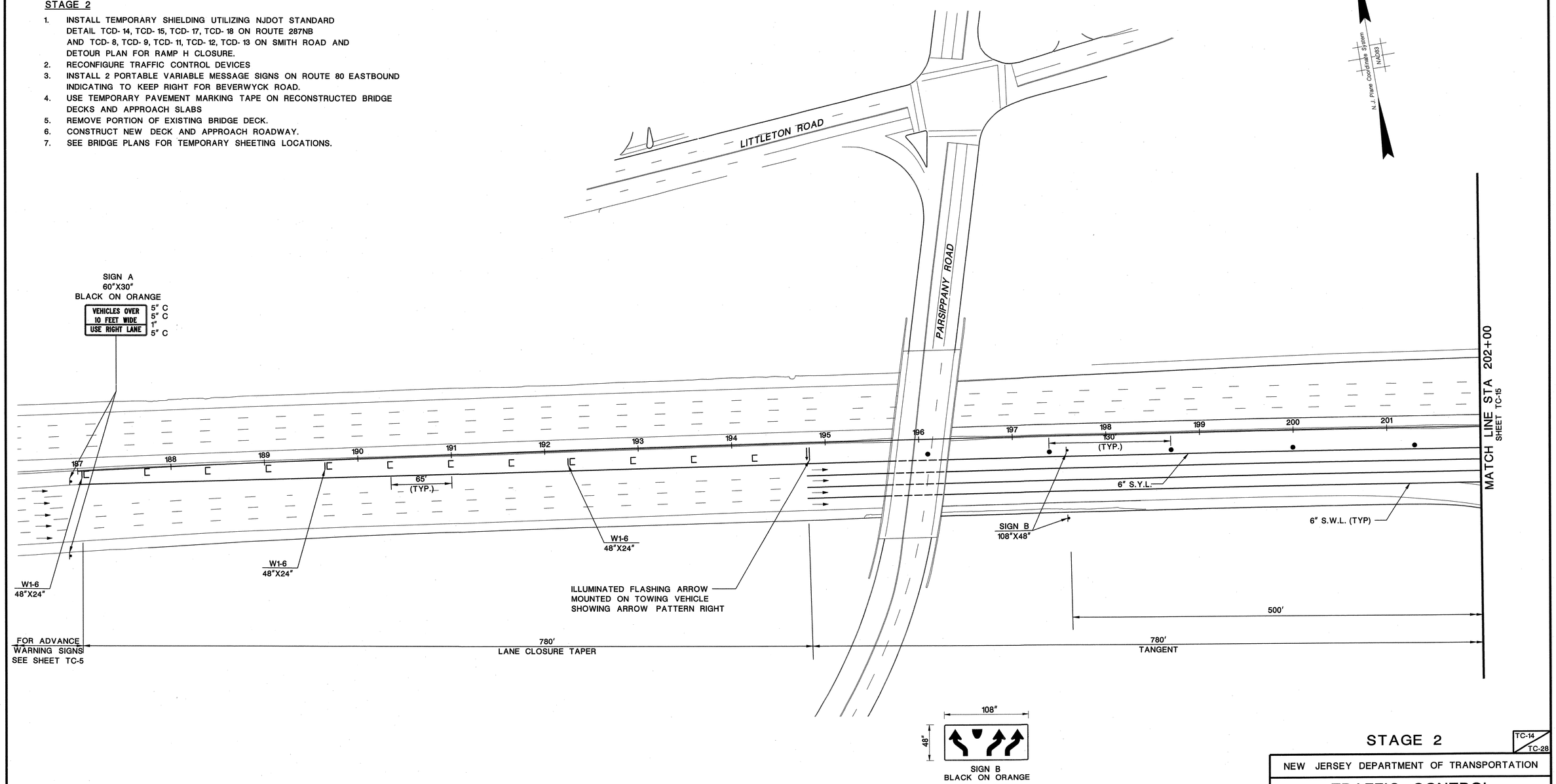

LEGEND

WORK ZONE

STAGE 2

TC-14
TC-28

NEW JERSEY DEPARTMENT OF TRANSPORTATION

TRAFFIC CONTROL AND STAGING PLANS

ROUTE 80 BRIDGES OVER ROUTE 287 NORTHBOUND AND SMITH ROAD
CONTRACT NO. 043003714

DEWBERRY-GOODKIND, INC.
CERTIFICATE OF AUTHORIZATION NO. 24GA28047600

Anthony Fulco 8/24/10

ANTHONY FULCO, P.E.
NJ PROFESSIONAL ENGINEER LICENSE NO. 24GE03993900

31
129

Dewberry-Goodkind, Inc.
Bloomfield, N.J.

apisani 8/24/2010 9:04:19 AM OceTDS700-BW.plt 30-scale 3056-REDECKING-Route80-287-V8 Q:\3056\Redecking\CAD\Civil\PLANS\TC\ACTC3056_S2_01A.dgn

STATE	FEDERAL PROJECT NO.
N.J.	BR-080-5(094)

TOWNSHIP OF PARSIPPANY - TROY HILLS

1"=50' 50 0 50 100

COUNTY OF MORRIS

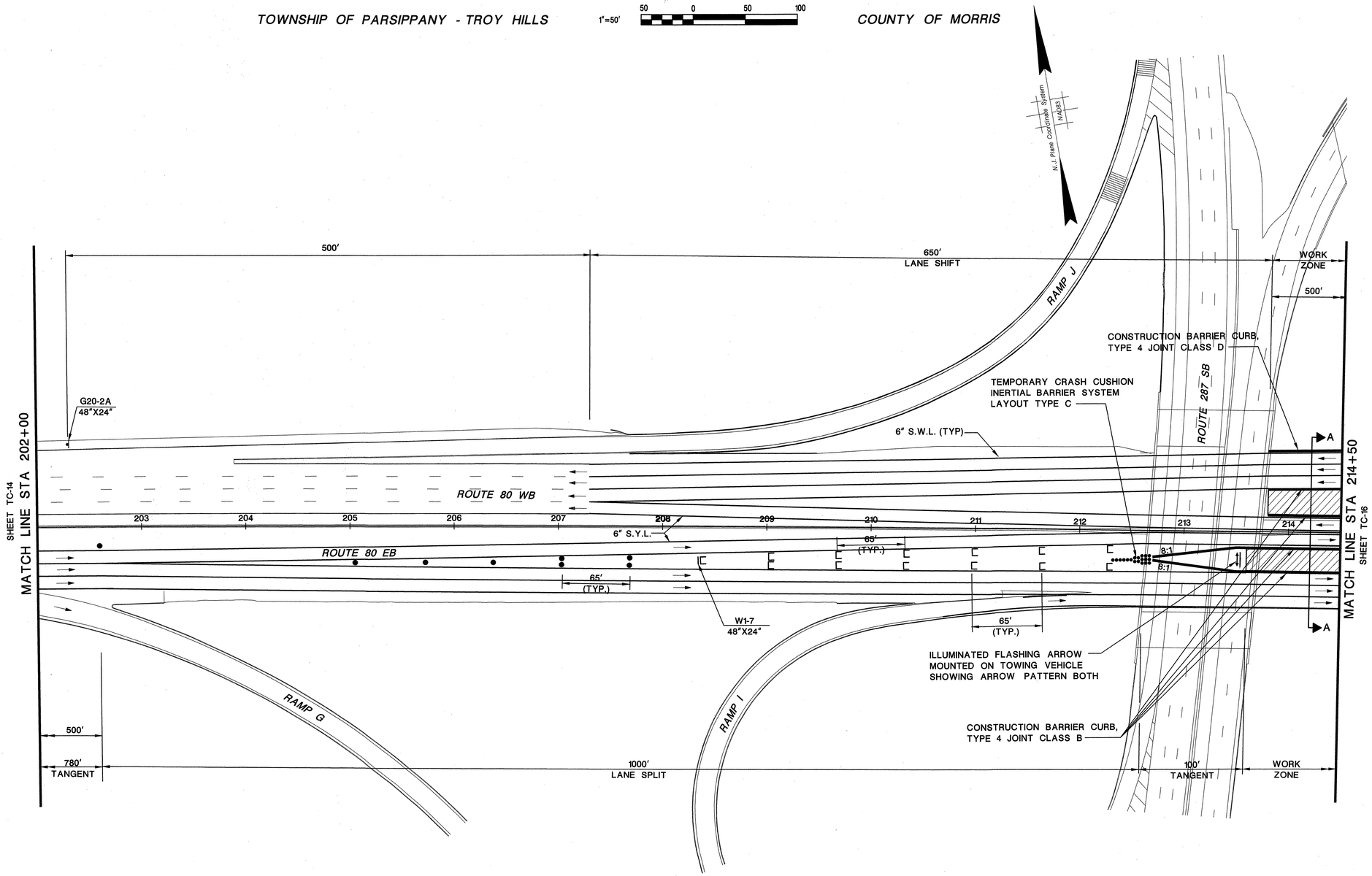

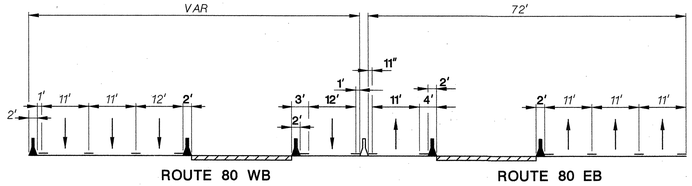

SECTION A-A

LEGEND

WORK ZONE

STAGE 2

TC-15 / TC-28

NEW JERSEY DEPARTMENT OF TRANSPORTATION

TRAFFIC CONTROL AND STAGING PLANS

ROUTE 80 BRIDGES OVER ROUTE 287
NORTHBOUND AND SMITH ROAD
CONTRACT NO. 043003714

DEWBERRY-GOODKIND, INC.
CERTIFICATE OF AUTHORIZATION NO. 24GA28047600
8/24/10
ANTHONY FULCO, P.E.
NJ PROFESSIONAL ENGINEER LICENSE NO. 24GE03993900

32
129

Dewberry-Goodkind, Inc.
Bloomfield, N.J.

apisani 8/24/2010 9:04:26 AM OceTDS700-BW.plt 30-scale 3056-REDECKING-Route80-287-V8 Q:\3056\Redecking\CAD\Civil\PLANS\TC\ACTC3056_S2_01.dgn

STATE	FEDERAL PROJECT NO.
N.J.	BR-080-5(094)

TOWNSHIP OF PARSIPPANY - TROY HILLS

1"=50' 50 0 50 100

COUNTY OF MORRIS

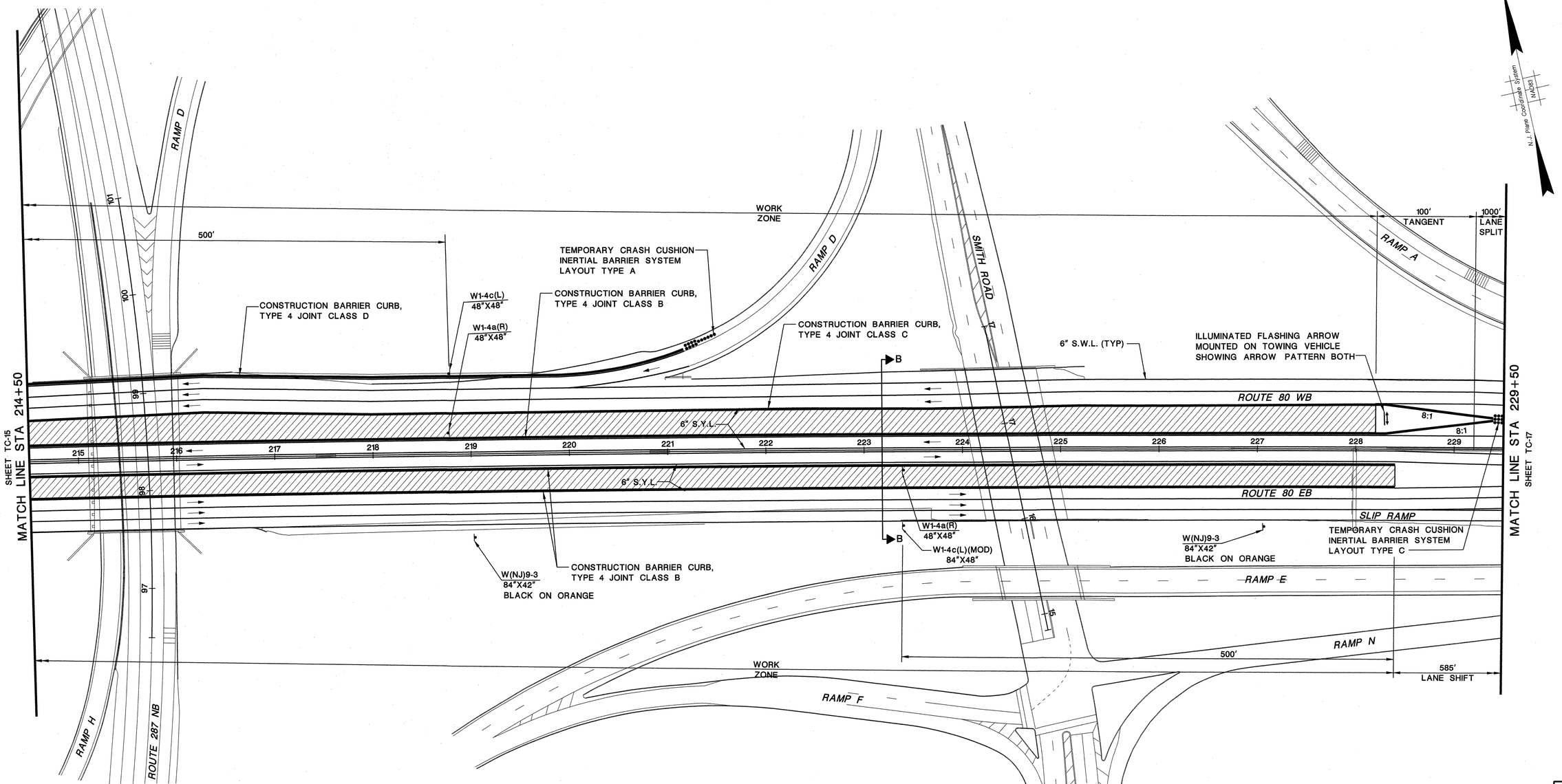

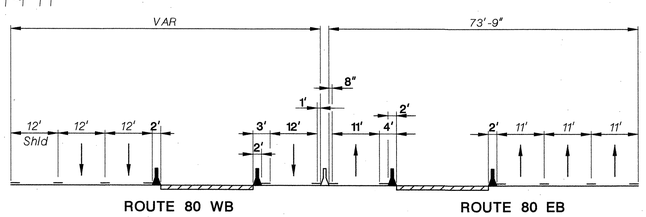

SECTION B-B

LEGEND

WORK ZONE

STAGE 2

TC-16 / TC-28

NEW JERSEY DEPARTMENT OF TRANSPORTATION

TRAFFIC CONTROL AND STAGING PLANS

ROUTE 80 BRIDGES OVER ROUTE 287 NORTHBOUND AND SMITH ROAD

CONTRACT NO. 043003714

DEWBERRY-GOODKIND, INC.

CERTIFICATE OF AUTHORIZATION NO. 24GA28047600

8/24/10

ANTHONY FULCO, P.E.

NJ PROFESSIONAL ENGINEER LICENSE NO. 24GE03993900

33 / 129

Dewberry-Goodkind, Inc.
Bloomfield, N.J.

apisani 8/24/2010 9:04:33 AM OceTDS700-BW.plt 30-scale 3056-REDECKING-Route80-287-V8 Q:\3056\Redecking\CAD\Civil\PLANS\TC\ACTC3056_S2_02.dgn

STATE	FEDERAL PROJECT NO.
N.J.	BR-080-5(094)

TOWNSHIP OF PARSIPPANY - TROY HILLS

1"=50' 50 0 50 100

COUNTY OF MORRIS

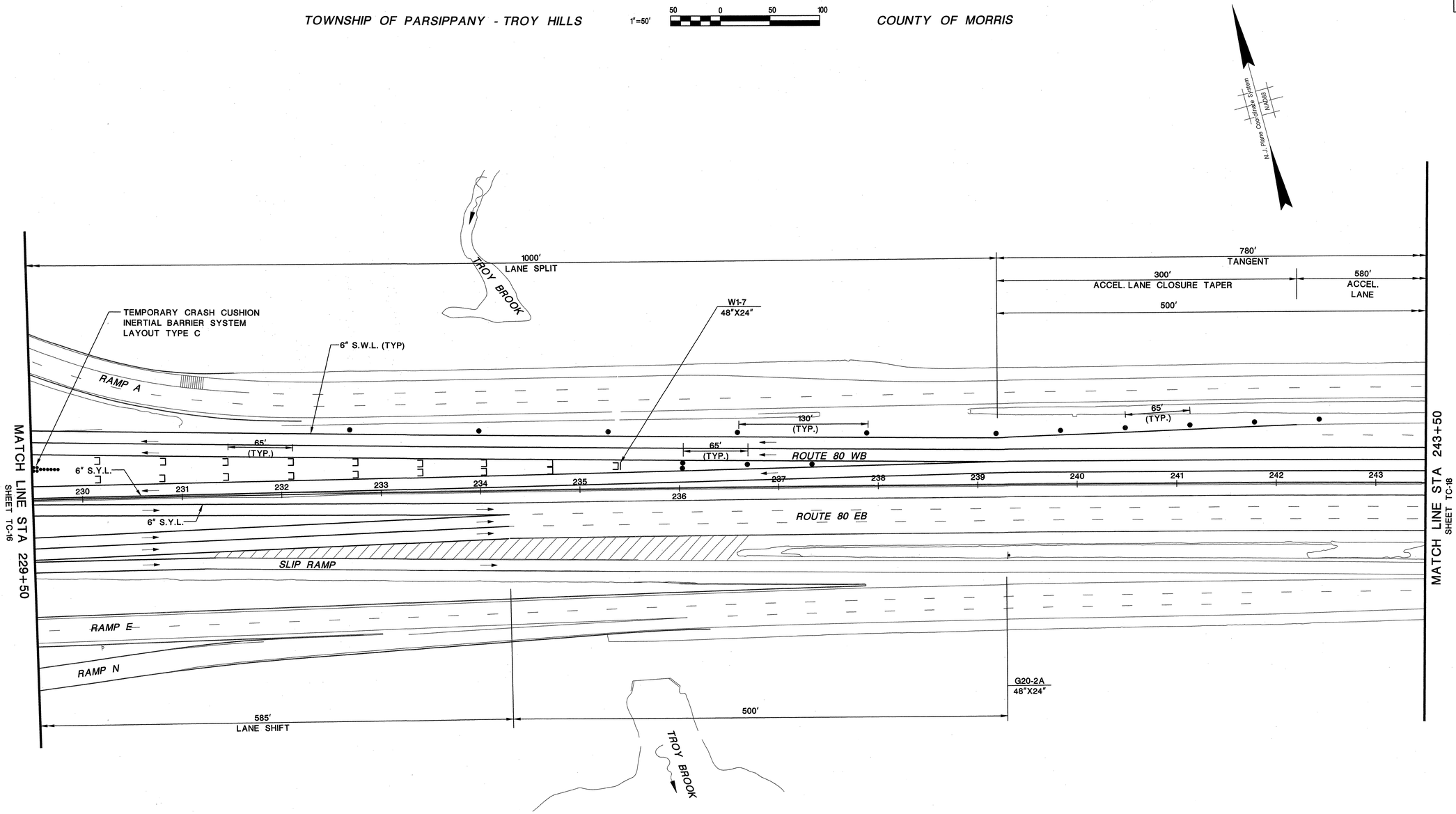

LEGEND

WORK ZONE

STAGE 2

TC-17 / TC-28

NEW JERSEY DEPARTMENT OF TRANSPORTATION

TRAFFIC CONTROL AND STAGING PLANS

ROUTE 80 BRIDGES OVER ROUTE 287
NORTHBOUND AND SMITH ROAD
CONTRACT NO. 043003714

DEWBERRY-GOODKIND, INC.

CERTIFICATE OF AUTHORIZATION NO. 24GA28047600

8/24/10

ANTHONY FULCO, P.E.

NJ PROFESSIONAL ENGINEER LICENSE NO. 24GE03993900

34
129

Dewberry-Goodkind, Inc.
Bloomfield, N.J.

apisani 8/24/2010 9:04:40 AM OceTDS700-BW.plt 30-scale 3056-REDECKING-Route80-287-V8 Q:\3056\Redecking\CAD\Civil\PLANS\TC\ACTC3056_S2_03.dgn

STATE	FEDERAL PROJECT NO.
N.J.	BR-080-5(094)

TOWNSHIP OF PARSIPPANY - TROY HILLS

1"=50'

50 0 50 100

COUNTY OF MORRIS

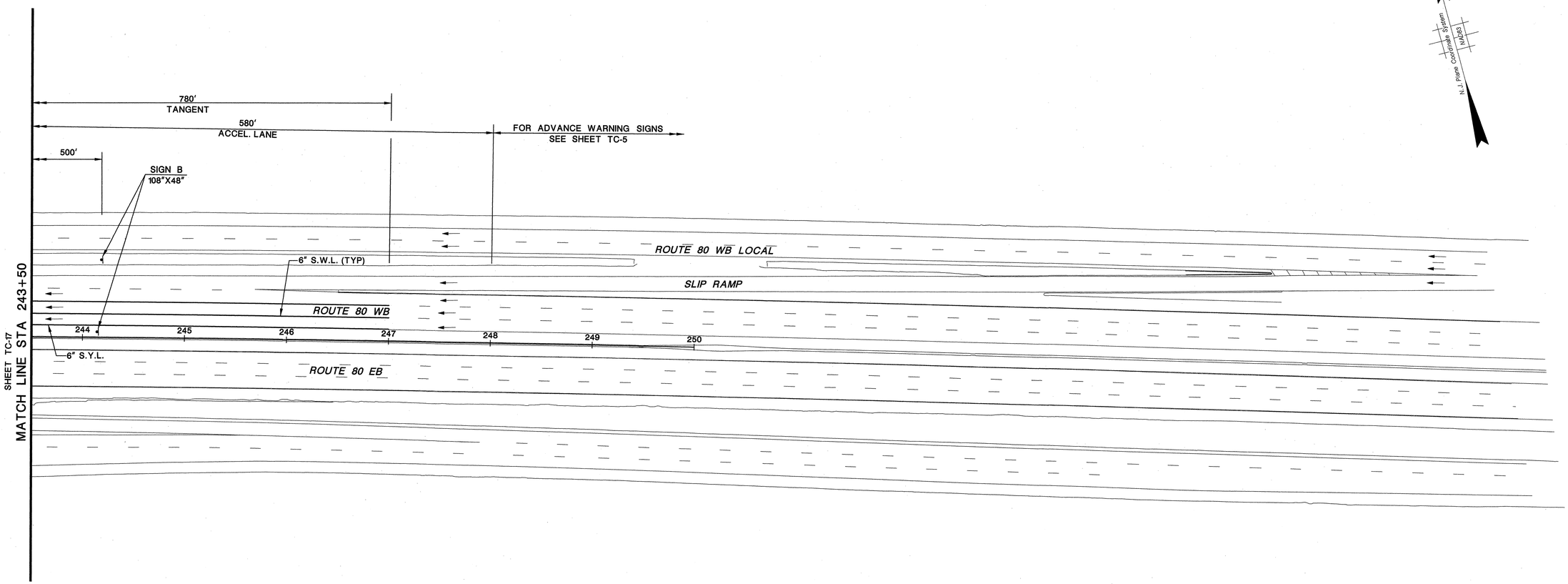

LEGEND

WORK ZONE

STAGE 2

TC-18
TC-28

NEW JERSEY DEPARTMENT OF TRANSPORTATION

TRAFFIC CONTROL AND STAGING PLANS

ROUTE 80 BRIDGES OVER ROUTE 287
NORTHBOUND AND SMITH ROAD
CONTRACT NO. 043003714

DEWBERRY-GOODKIND, INC.

CERTIFICATE OF AUTHORIZATION NO. 24GA28047600

Anthony Fulco 8/24/10

ANTHONY FULCO, P.E.

NJ PROFESSIONAL ENGINEER LICENSE NO. 24GE03993900

35
129

Dewberry-Goodkind, Inc.
Bloomfield, N.J.

apisani 8/24/2010 9:04:46 AM OceTDS700-BW.plt 30-scale 3056-REDECKING-Route80-287-V8 Q:\3056\Redecking\CAD\Civil\PLANS\TC\ACTC3056_S2_04.dgn

STATE	FEDERAL PROJECT NO.
N.J.	BR-080-5(094)

TOWNSHIP OF PARSIPPANY - TROY HILLS

1"=50' 50 0 50 100

COUNTY OF MORRIS

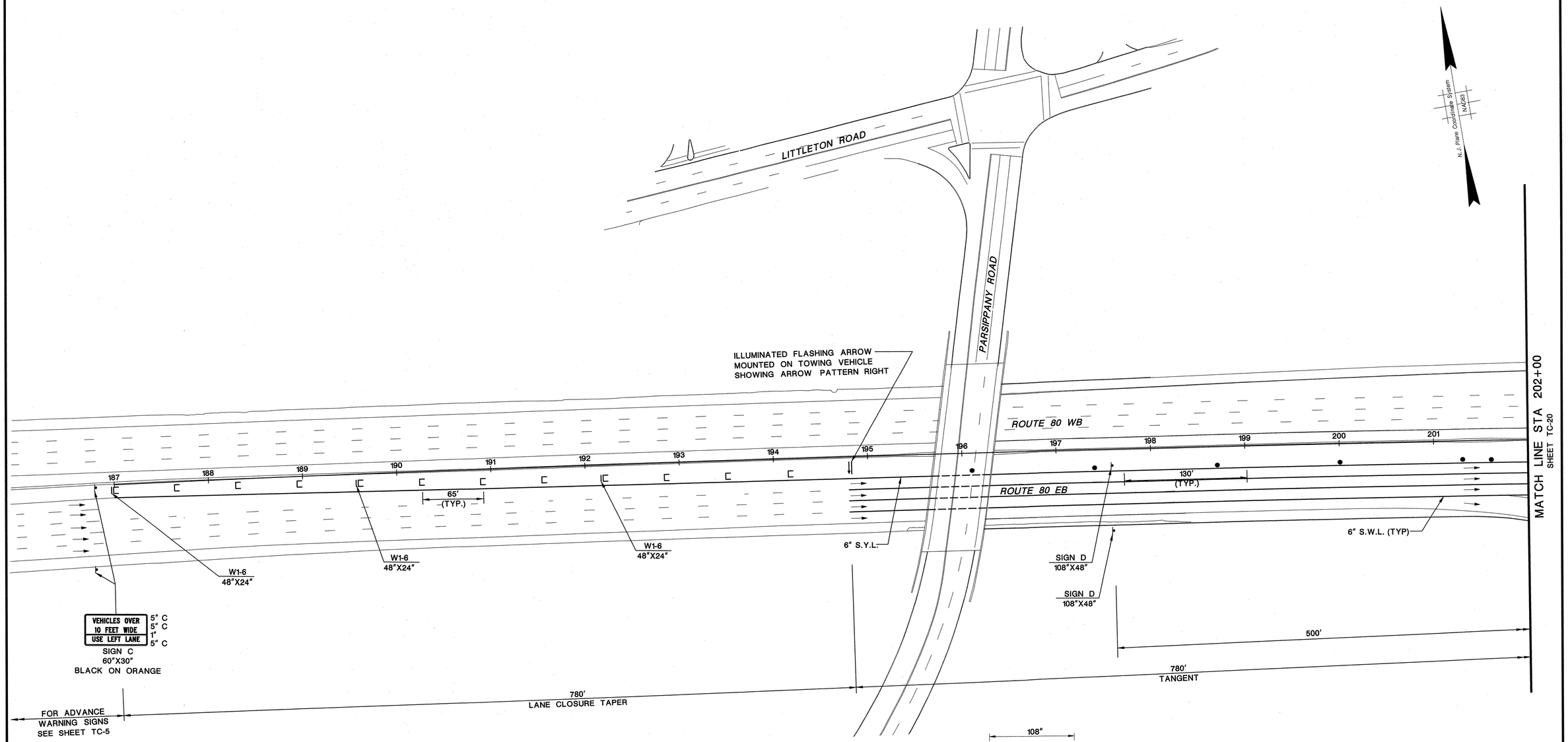

108"

48"

SIGN D
BLACK ON ORANGE

STAGE 3

1. INSTALL TEMPORARY SHIELDING UTILIZING NJDOT STANDARD DETAIL TCD- 14, TCD- 15, TCD- 17, TCD- 18 ON ROUTE 287NB AND TCD- 8, TCD- 9, TCD- 11, TCD- 12, TCD- 13 ON SMITH ROAD AND DETOUR PLAN FOR RAMP H CLOSURE.
2. RECONFIGURE TRAFFIC CONTROL DEVICES.
3. INSTALL 2 PORTABLE VARIABLE MESSAGE SIGNS ON ROUTE 80 EASTBOUND INDICATING TO KEEP RIGHT FOR BEVERWYCK ROAD.
4. USE TEMPORARY PAVEMENT MARKING TAPE ON RECONSTRUCTED BRIDGE DECKS AND APPROACH SLABS.
5. REMOVE EXISTING PORTION OF BRIDGE DECK.
6. CONSTRUCT BRIDGE DECK AND APPROACH ROADWAY.
7. SEE BRIDGE PLANS FOR TEMPORARY SHEETING LOCATIONS.

LEGEND

WORK ZONE

STAGE 3

TC-19 / TC-28

NEW JERSEY DEPARTMENT OF TRANSPORTATION

TRAFFIC CONTROL AND STAGING PLANS

ROUTE 80 BRIDGES OVER ROUTE 287 NORTHBOUND AND SMITH ROAD
CONTRACT NO. 043003714

DEWBERRY-GOODKIND, INC.
CERTIFICATE OF AUTHORIZATION NO. 24GA28047600
ANTHONY FULCO, P.E.
NJ PROFESSIONAL ENGINEER LICENSE NO. 24GE03993900

36
129

Dewberry-Goodkind, Inc.
Bloomfield, N.J.

apisani 8/24/2010 9:04:55 AM OceTDS700-BW.plt 30-scale 3056-REDECKING-Route80-287-V8 Q:\3056\Redecking\CAD\Civil\PLANS\TC\ACTC3056_S3_01A.dgn

STATE	FEDERAL PROJECT NO.
N.J.	BR-080-5(094)

TOWNSHIP OF PARSIPPANY - TROY HILLS

1"=50'

50 0 50 100

COUNTY OF MORRIS

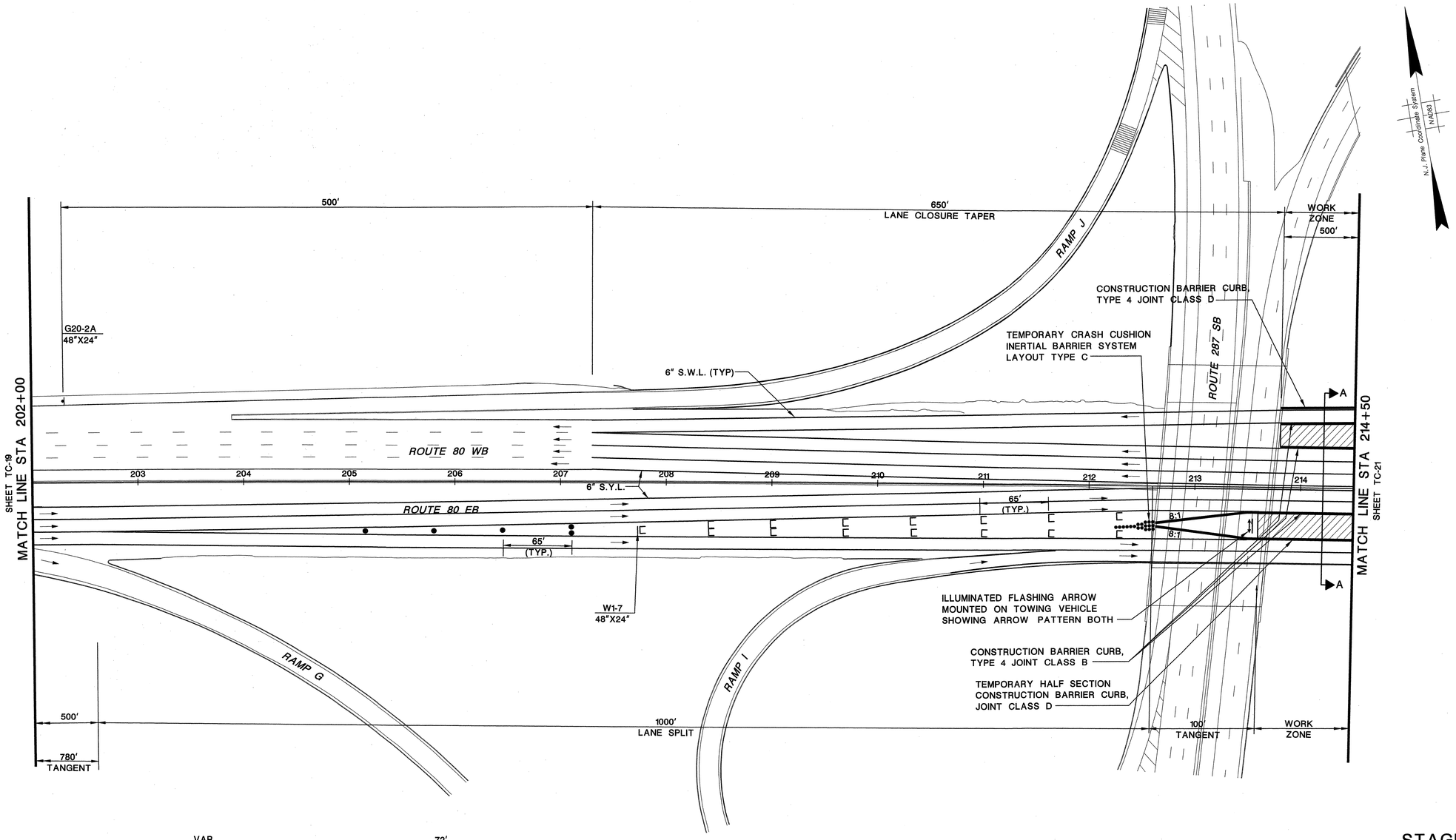

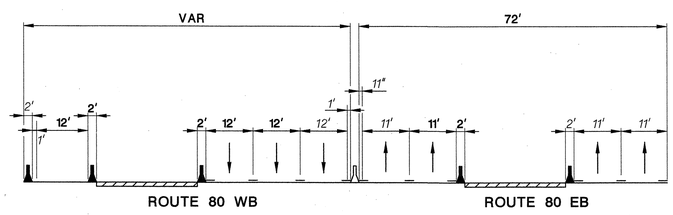

SECTION A-A

LEGEND

WORK ZONE

STAGE 3

TC-20
TC-28

NEW JERSEY DEPARTMENT OF TRANSPORTATION

TRAFFIC CONTROL AND STAGING PLANS

ROUTE 80 BRIDGES OVER ROUTE 287 NORTHBOUND AND SMITH ROAD

CONTRACT NO. 043003714

DEWBERRY-GOODKIND, INC.

CERTIFICATE OF AUTHORIZATION NO. 24GA28047600

ANTHONY FULCO, P.E.

NJ PROFESSIONAL ENGINEER LICENSE NO. 24GE03993900

Dewberry-Goodkind, Inc.
Bloomfield, N.J.

apisani 8/24/2010 9:05:02 AM OceTDS700-BW.plt 30-scale 3056-REDECKING-Route80-287-V8 Q:\3056\Redecking\CAD\Civil\PLANS\TC\ACTC3056_S3_01.dgn

STATE	FEDERAL PROJECT NO.
N.J.	BR-080-5(094)

TOWNSHIP OF PARSIPPANY - TROY HILLS

1"=50'

50 0 50 100

COUNTY OF MORRIS

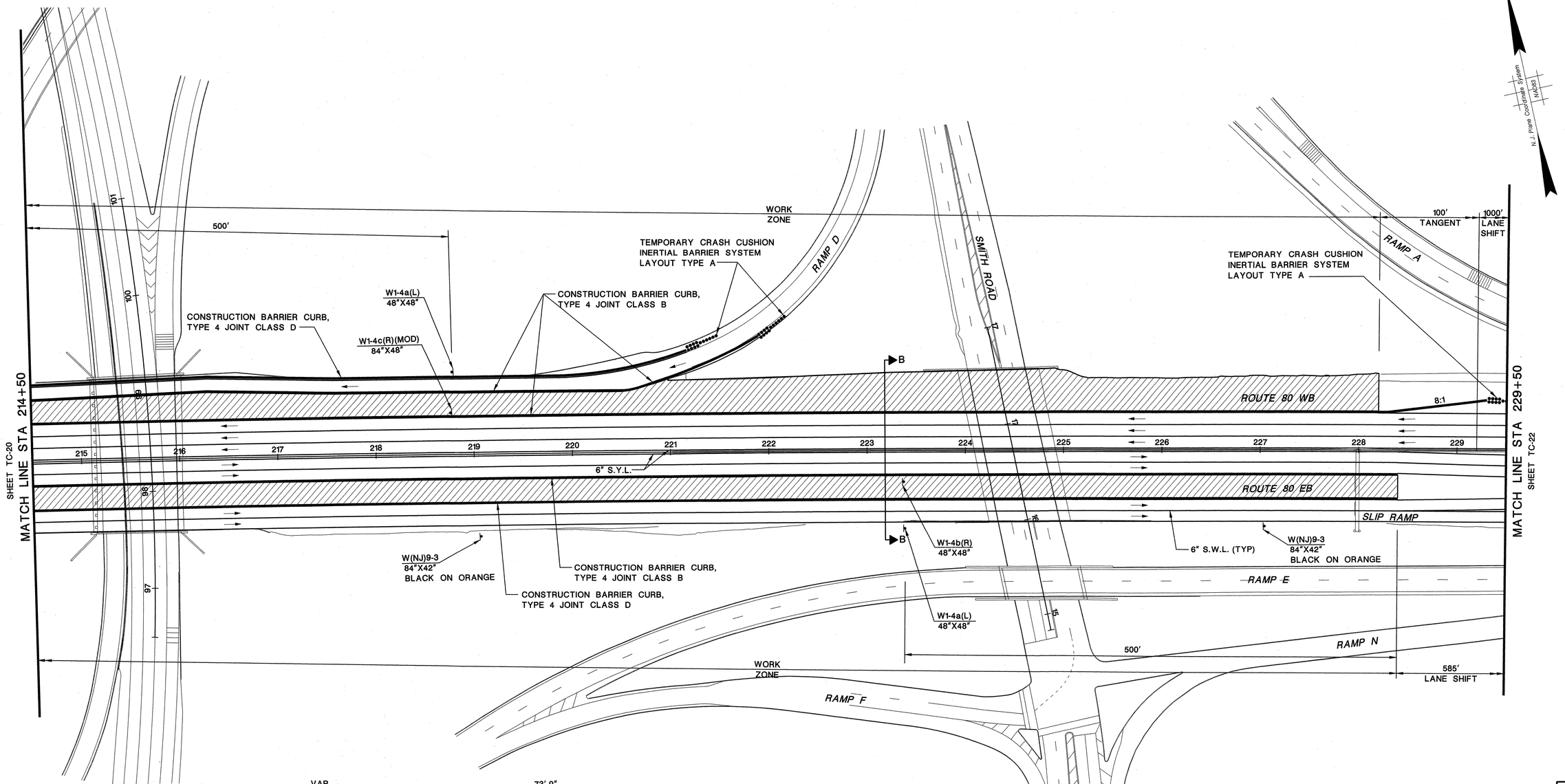

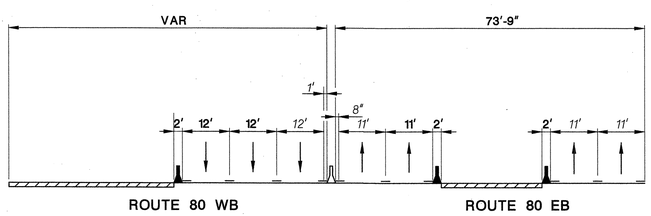

SECTION B-B

LEGEND

WORK ZONE

STAGE 3

TC-21 / TC-28

NEW JERSEY DEPARTMENT OF TRANSPORTATION

TRAFFIC CONTROL AND STAGING PLANS

ROUTE 80 BRIDGES OVER ROUTE 287
NORTHBOUND AND SMITH ROAD
CONTRACT NO. 043003714

DEWBERRY-GOODKIND, INC.

CERTIFICATE OF AUTHORIZATION NO. 24GA28047600

ANTHONY FULCO, P.E.

NJ PROFESSIONAL ENGINEER LICENSE NO. 24GE03993900

38
129

Dewberry-Goodkind, Inc.
Bloomfield, N.J.

apisani 8/24/2010 9:05:09 AM OceTDS700-BW.plt 30-scale 3056-REDECKING-Route80-287-V8 Q:\3056\Redecking\CAD\Civil\PLANS\TC\ACTC3056_S3_02.dgn

STATE	FEDERAL PROJECT NO.
N.J.	BR-080-5(094)

TOWNSHIP OF PARSIPPANY - TROY HILLS

1"=50'

50 0 50 100

COUNTY OF MORRIS

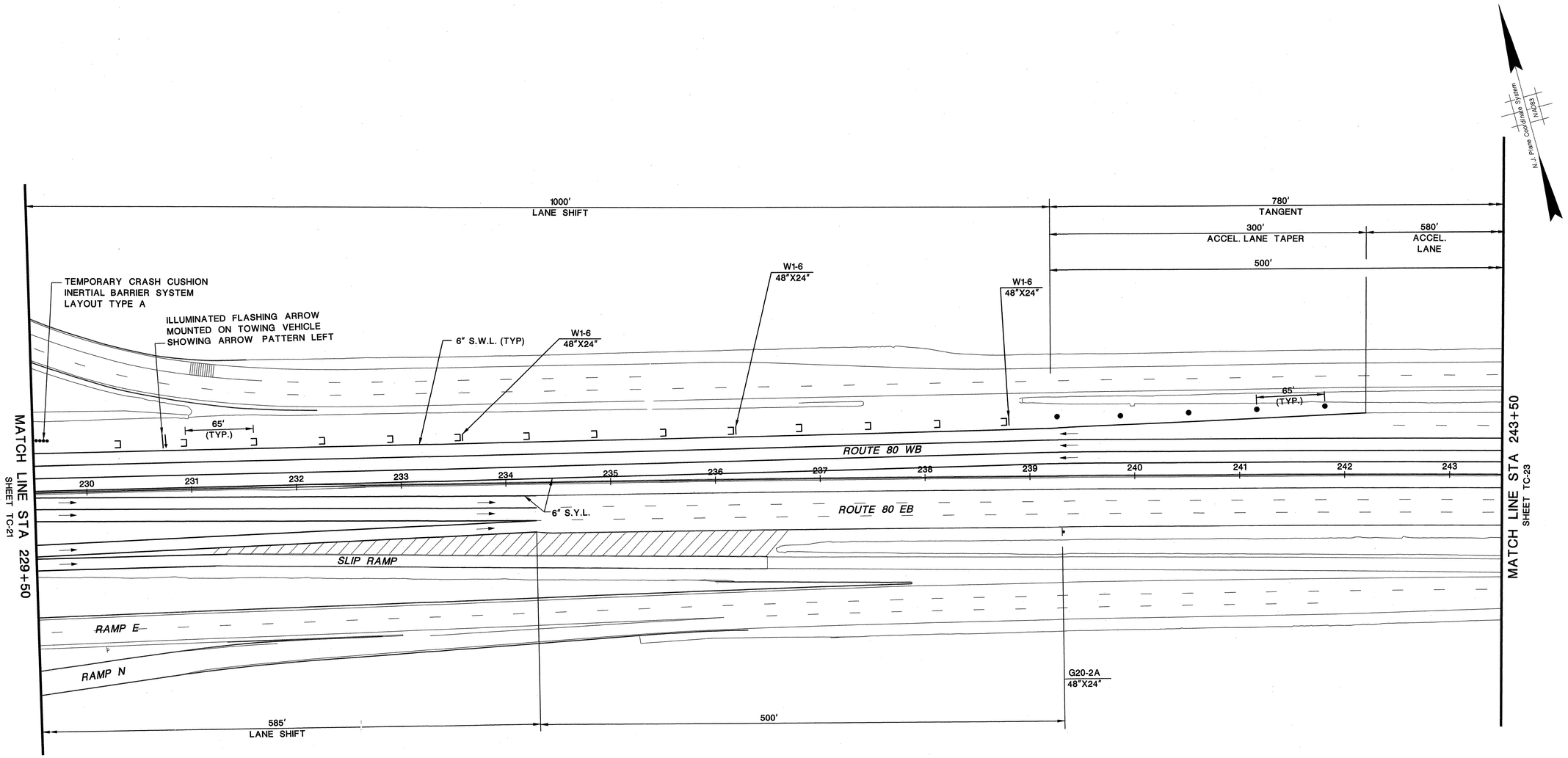

LEGEND

WORK ZONE

STAGE 3

TC-22
TC-28

NEW JERSEY DEPARTMENT OF TRANSPORTATION

TRAFFIC CONTROL AND STAGING PLANS

ROUTE 80 BRIDGES OVER ROUTE 287
NORTHBOUND AND SMITH ROAD
CONTRACT NO. 043003714

DEWBERRY-GOODKIND, INC.

CERTIFICATE OF AUTHORIZATION NO. 24GA28047600

8/24/10

ANTHONY FULCO, P.E.

NJ PROFESSIONAL ENGINEER LICENSE NO. 24GE03993900

39
129

Dewberry-Goodkind, Inc.
Bloomfield, N.J.

apisani 8/24/2010 9:05:16 AM OceTDS700-BW.plt 30-scale 3056-REDECKING-Route80-287-V8 Q:\3056\Redecking\CAD\Civil\PLANS\TC\ACTC3056_S3_03.dgn

STATE	FEDERAL PROJECT NO.
N.J.	BR-080-5(094)

TOWNSHIP OF PARSIPPANY - TROY HILLS

1"=50'

50 0 50 100

COUNTY OF MORRIS

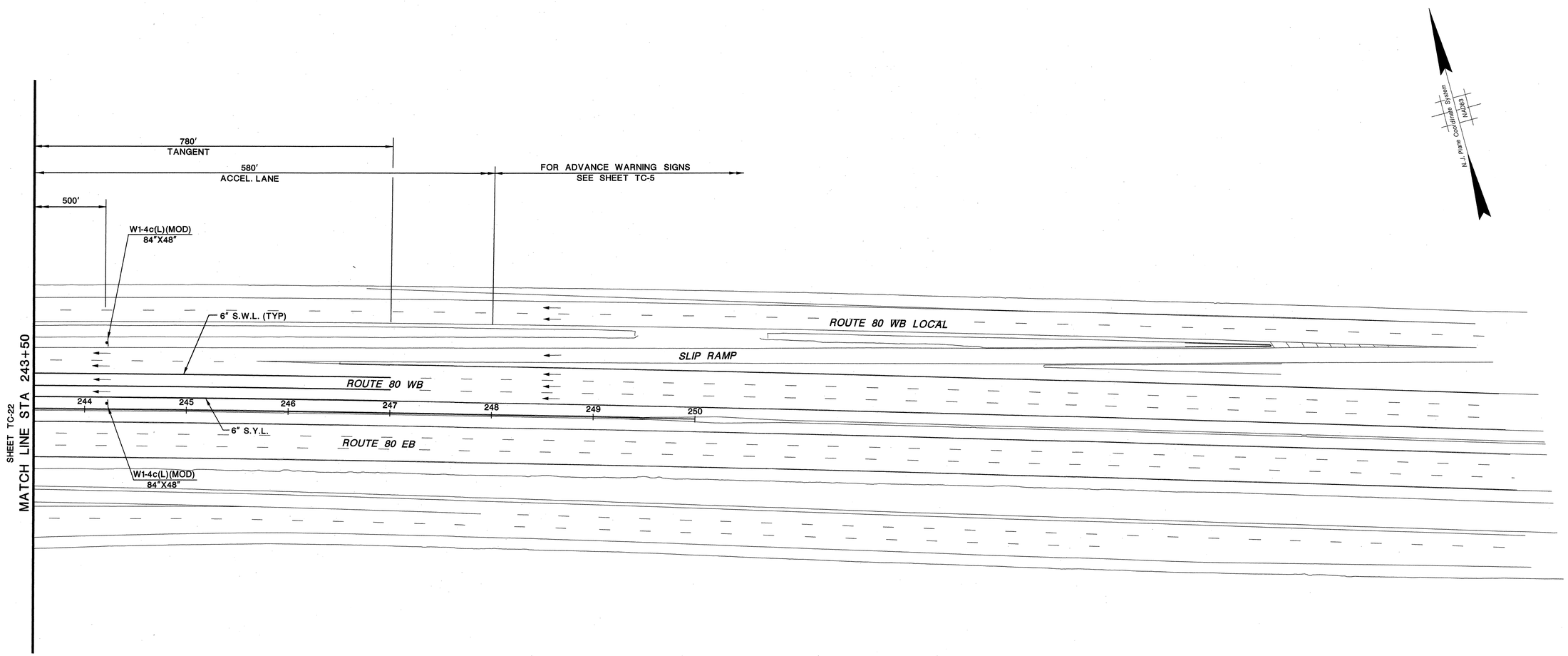

LEGEND

WORK ZONE

STAGE 3

TC-23
TC-28

NEW JERSEY DEPARTMENT OF TRANSPORTATION

TRAFFIC CONTROL AND STAGING PLANS

ROUTE 80 BRIDGES OVER ROUTE 287
NORTHBOUND AND SMITH ROAD
CONTRACT NO. 043003714

DEWBERRY-GOODKIND, INC.

CERTIFICATE OF AUTHORIZATION NO. 24GA28047600

9/24/10

ANTHONY FULCO, P.E.

NJ PROFESSIONAL ENGINEER LICENSE NO. 24GE03993900

40
129

Dewberry-Goodkind, Inc.
Bloomfield, N.J.

apisani 8/24/2010 9:05:22 AM OceTDS700-BW.plt 30-scale 3056-REDECKING-Route80-287-V8 Q:\3056\Redecking\CAD\Civil\PLANS\TC\ACTC3056_S3_04.dgn

STATE	FEDERAL PROJECT NO.
N.J.	BR-080-5(094)

TOWNSHIP OF PARSIPPANY - TROY HILLS

1"=50' 50 0 50 100

COUNTY OF MORRIS

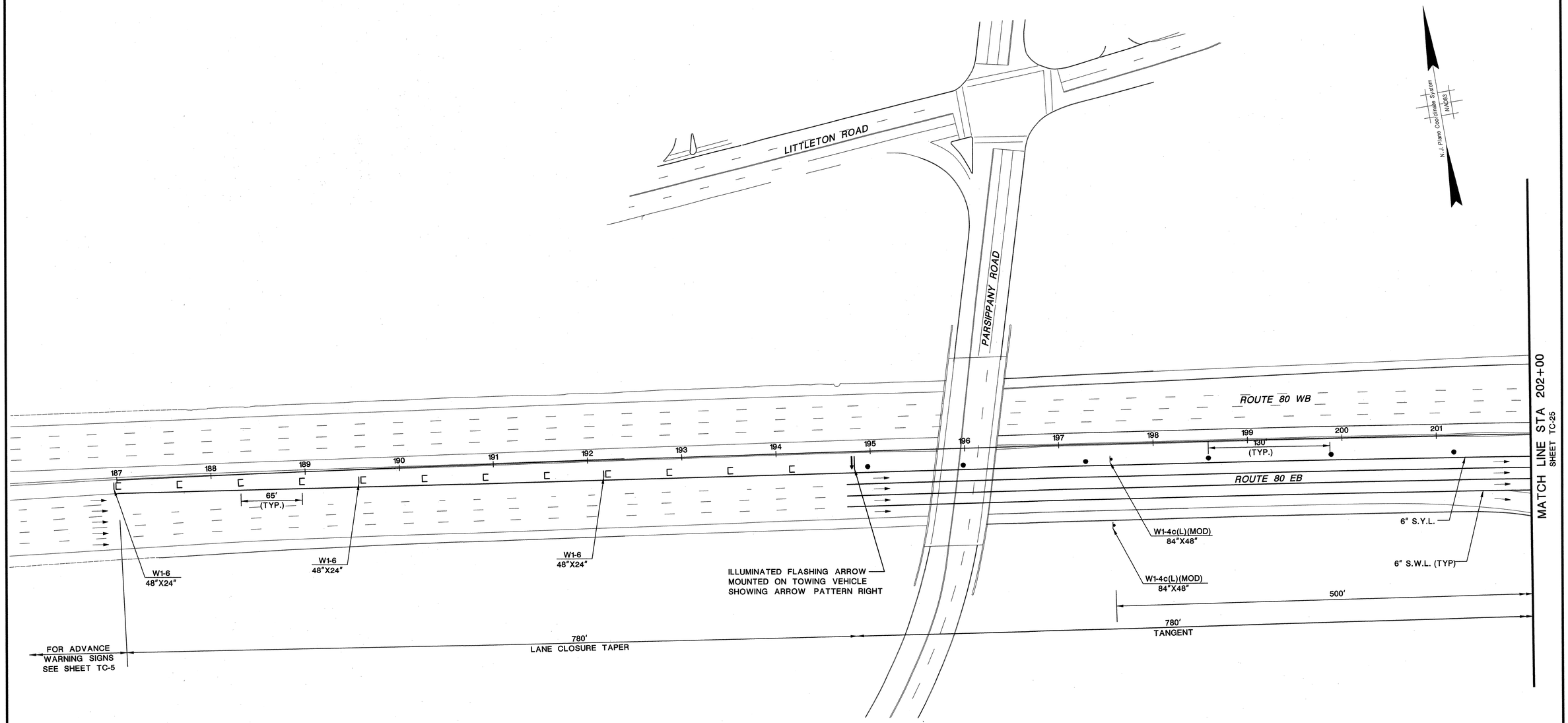

STAGE 4

1. INSTALL TEMPORARY SHIELDING UTILIZING NJDOT STANDARD DETAIL TCD- 14, TCD- 15, TCD- 17, TCD- 18 ON ROUTE 287NB AND TCD- 8, TCD- 9, TCD- 11, TCD- 12, TCD- 13 ON SMITH ROAD AND DETOUR PLAN FOR RAMP H CLOSURE.
2. RECONFIGURE TRAFFIC CONTROL DEVICES.
3. USE TEMPORARY PAVEMENT MARKING TAPE ON RECONSTRUCTED BRIDGE DECKS AND APPROACH SLABS.
4. REMOVE SIGN STRUCTURE AND RELOCATE SIGN ON TEMPORARY SUPPORT.
5. INSTALL NEW AND REMOVE OLD ITS TRANSMITTERS.
6. RECONSTRUCT OUTER SECTION OF BRIDGE DECK AND APPROACH ROADWAY.
7. REMOVE TEMPORARY SHIELDING UTILIZING NJDOT STANDARD DETAIL TCD- 14, TCD- 15, TCD- 17, TCD- 18 ON ROUTE 287NB AND TCD- 8, TCD- 9, TCD- 11, TCD- 12, TCD- 13 ON SMITH ROAD AND DETOUR PLAN FOR RAMP H CLOSURE.
8. SEE BRIDGE PLANS FOR TEMPORARY SHEETING LOCATIONS.

LEGEND

WORK ZONE

STAGE 4

TC-24 / TC-28

NEW JERSEY DEPARTMENT OF TRANSPORTATION

TRAFFIC CONTROL AND STAGING PLANS

ROUTE 80 BRIDGES OVER ROUTE 287 NORTHBOUND AND SMITH ROAD
CONTRACT NO. 043003714

DEWBERRY-GOODKIND, INC.

CERTIFICATE OF AUTHORIZATION NO. 24GA28047600

ANTHONY FULCO, P.E.

NJ PROFESSIONAL ENGINEER LICENSE NO. 24GE03993900

Dewberry-Goodkind, Inc.
Bloomfield, N.J.

apisani 8/24/2010 9:05:29 AM OceTDS700-BW.plt 30-scale 3056-REDECKING-Route80-287-V8 Q:\3056\Redecking\CAD\Civil\PLANS\TC\ACTC3056_S4_01A.dgn

STATE	FEDERAL PROJECT NO.
N.J.	BR-080-5(094)

TOWNSHIP OF PARSIPPANY - TROY HILLS

1"=50'

50 0 50 100

COUNTY OF MORRIS

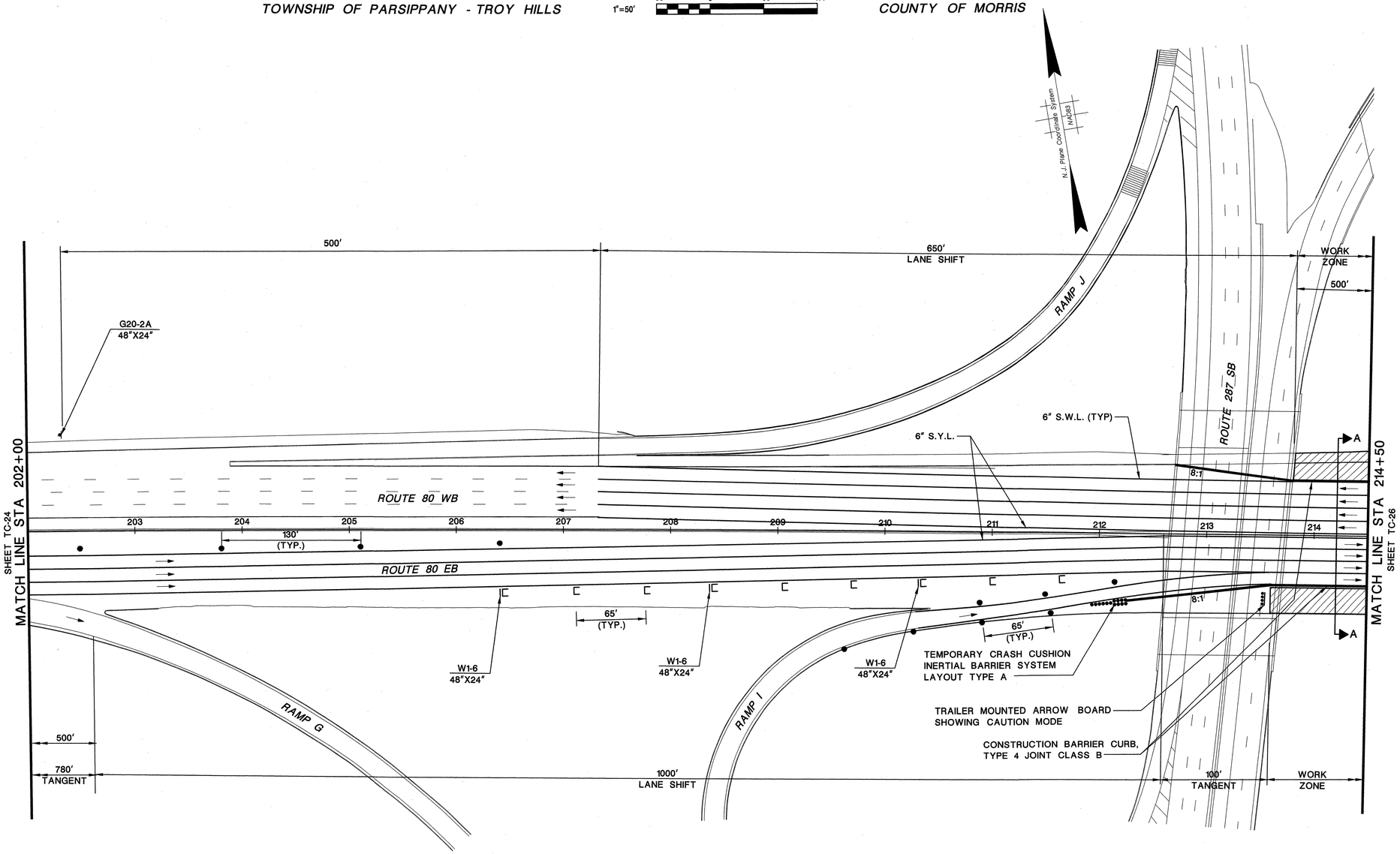

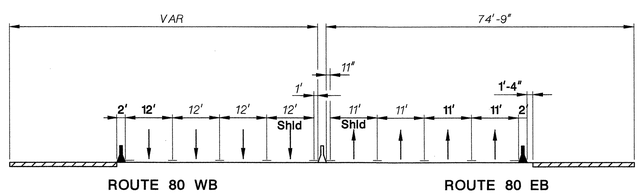

SECTION A-A

LEGEND

WORK ZONE

STAGE 4

TC-25
TC-28

NEW JERSEY DEPARTMENT OF TRANSPORTATION

TRAFFIC CONTROL AND STAGING PLANS

ROUTE 80 BRIDGES OVER ROUTE 287
NORTHBOUND AND SMITH ROAD
CONTRACT NO. 043003714

DEWBERRY-GOODKIND, INC.

CERTIFICATE OF AUTHORIZATION NO. 24GA28047600

ANTHONY FULCO, P.E.

NJ PROFESSIONAL ENGINEER LICENSE NO. 24GE03993900

42
129

Dewberry-Goodkind, Inc.
Bloomfield, N.J.

apisani 8/24/2010 9:38:59 AM OceTDS700-BW.plt 30-scale 3056-REDECKING-Route80-287-V8 Q:\3056\Redecking\CAD\Civil\PLANS\TC\ACTC3056_S4_01.dgn

STATE	FEDERAL PROJECT NO.
N.J.	BR-080-5(094)

TOWNSHIP OF PARSIPPANY - TROY HILLS

1"=50'

50 0 50 100

COUNTY OF MORRIS

ITEM NO.	TO BE CONSTRUCTED	CONTRACT QUANTITY
202021P	REMOVAL OF PAVEMENT	118 S.Y.

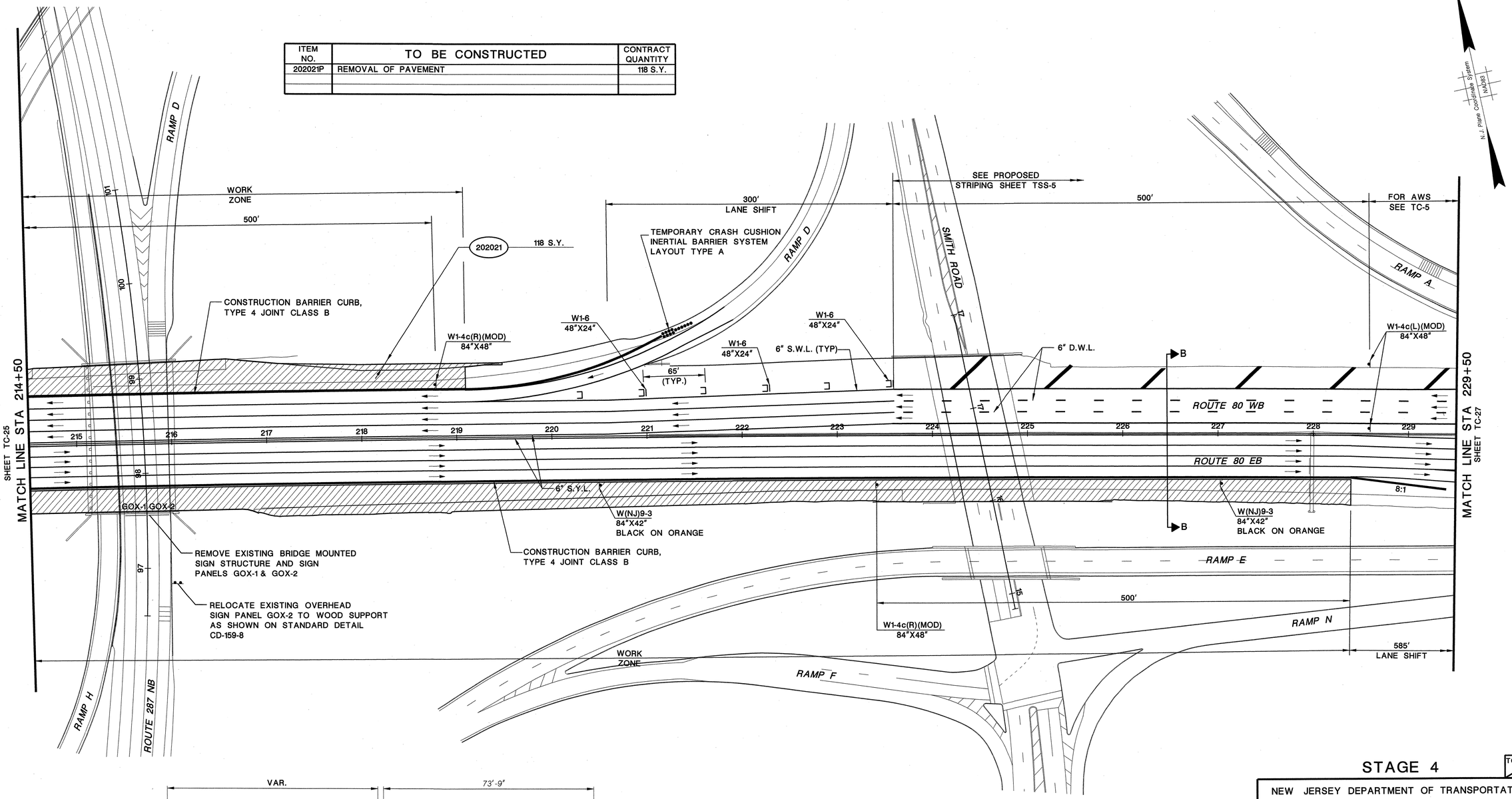

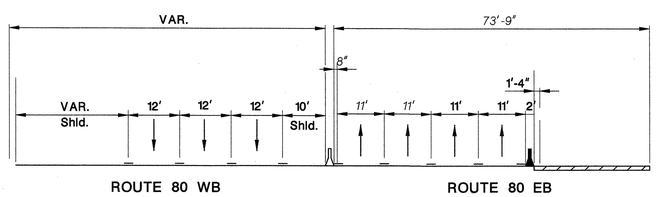

SECTION B-B

LEGEND

WORK ZONE

STAGE 4

TC-26 / TC-28

NEW JERSEY DEPARTMENT OF TRANSPORTATION

TRAFFIC CONTROL AND STAGING PLANS

ROUTE 80 BRIDGES OVER ROUTE 287 NORTHBOUND AND SMITH ROAD

CONTRACT NO. 043003714

DEWBERRY-GOODKIND, INC.

CERTIFICATE OF AUTHORIZATION NO. 24GA28047600

ANTHONY FULCO, P.E.

NJ PROFESSIONAL ENGINEER LICENSE NO. 24GE03993900

43 / 129

Dewberry-Goodkind, Inc.
Bloomfield, N.J.

apisani 8/24/2010 9:05:44 AM OceTDS700-BW.plt 30-scale 3056-REDECKING-Route80-287-V8 Q:\3056\Redecking\CAD\Civil\PLANS\TC\ACTC3056_S4_02.dgn

STATE	FEDERAL PROJECT NO.
N.J.	BR-080-5(094)

TOWNSHIP OF PARSIPPANY - TROY HILLS

1"=50'

50 0 50 100

COUNTY OF MORRIS

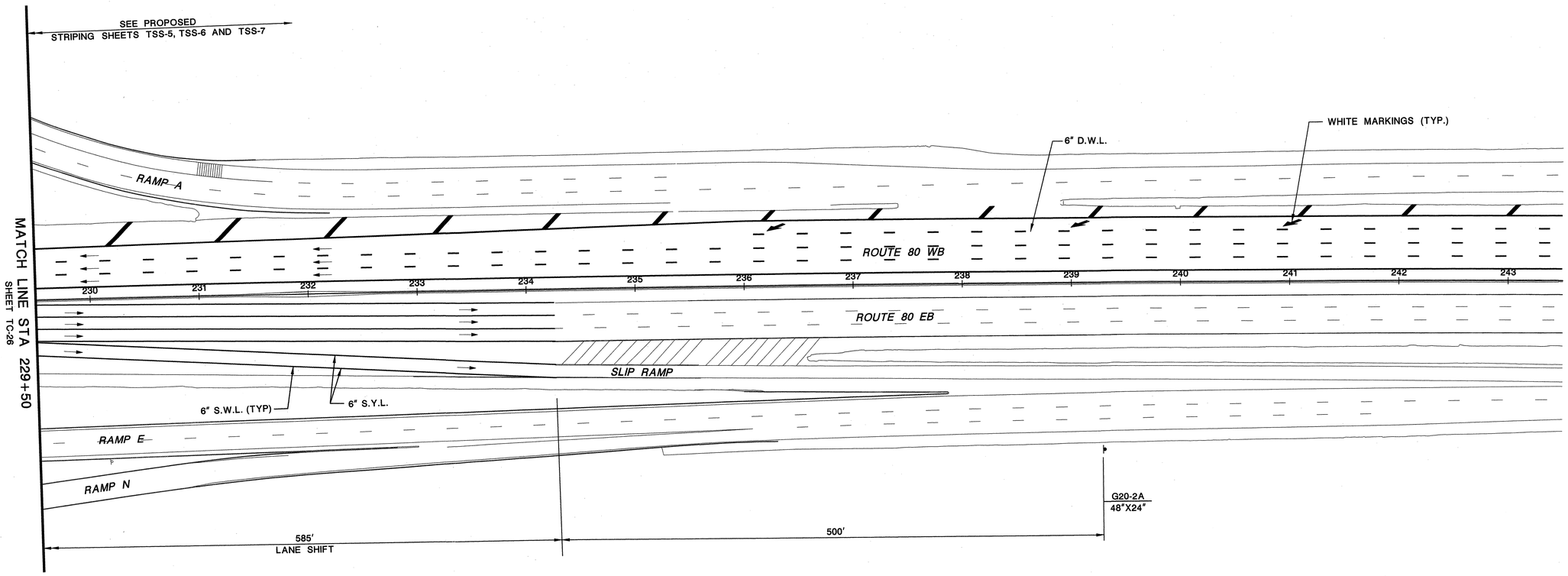

LEGEND

WORK ZONE

STAGE 4

TC-27 / TC-28

NEW JERSEY DEPARTMENT OF TRANSPORTATION

TRAFFIC CONTROL AND STAGING PLANS

ROUTE 80 BRIDGES OVER ROUTE 287
NORTHBOUND AND SMITH ROAD
CONTRACT NO. 043003714

DEWBERRY-GOODKIND, INC.

CERTIFICATE OF AUTHORIZATION NO. 24GA28047600

ANTHONY FULCO, P.E.

NJ PROFESSIONAL ENGINEER LICENSE NO. 24GE03993900

Dewberry-Goodkind, Inc.
Bloomfield, N.J.

STATE	FEDERAL PROJECT NO.
N.J.	BR-080-5(094)

TOWNSHIP OF PARSIPPANY - TROY HILLS

COUNTY OF MORRIS

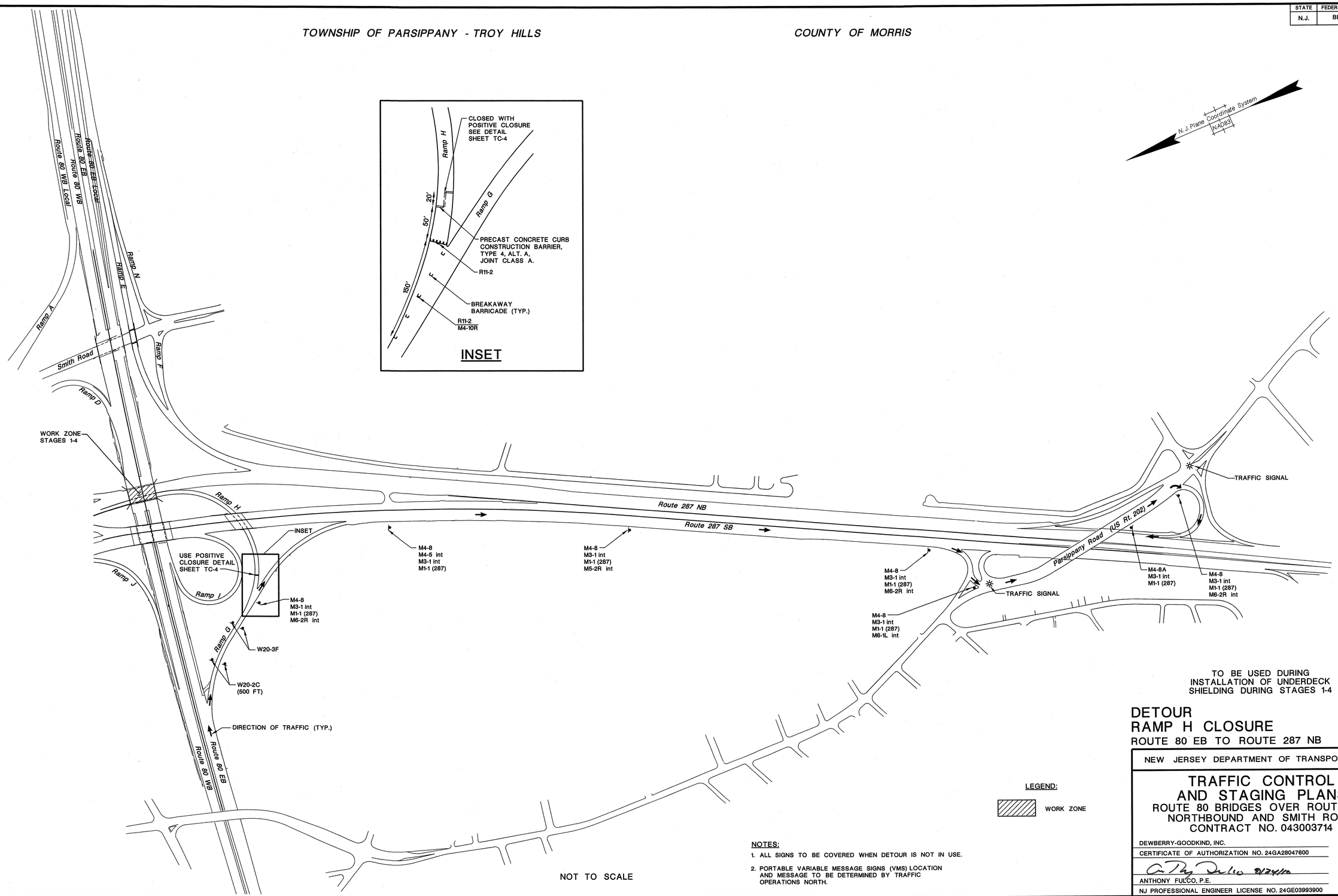

TO BE USED DURING INSTALLATION OF UNDERDECK SHIELDING DURING STAGES 1-4

DETOUR
RAMP H CLOSURE
ROUTE 80 EB TO ROUTE 287 NB

TC-28 / TC-28

NEW JERSEY DEPARTMENT OF TRANSPORTATION

TRAFFIC CONTROL AND STAGING PLANS
ROUTE 80 BRIDGES OVER ROUTE 287 NORTHBOUND AND SMITH ROAD
CONTRACT NO. 043003714

DEWBERRY-GOODKIND, INC.

CERTIFICATE OF AUTHORIZATION NO. 24GA28047600

8/24/10

ANTHONY FULCO, P.E.

NJ PROFESSIONAL ENGINEER LICENSE NO. 24GE03993900

LEGEND:

WORK ZONE

NOTES:

1. ALL SIGNS TO BE COVERED WHEN DETOUR IS NOT IN USE.
2. PORTABLE VARIABLE MESSAGE SIGNS (VMS) LOCATION AND MESSAGE TO BE DETERMINED BY TRAFFIC OPERATIONS NORTH.

NOT TO SCALE

Dewberry-Goodkind, Inc.
Bloomfield, N.J.

apisani 8/24/2010 9:06:04 AM OceTDS700-BW.plt 30-scale 3056-REDECKING-Route80-287-V8 Q:\3056\Redecking\CAD\Civil\PLANS\TC\ACTC3056_DETOUR01.dgn

STATE	FEDERAL PROJECT NO.
N.J.	BR-080-5(094)

ITEM NO.	TO BE CONSTRUCTED	CONTRACT QUANTITY
701008P	1¼" RIGID METALLIC CONDUIT	370 L.F.
701036P	1¼" FLEXIBLE METALLIC CONDUIT	20 L.F.
701105M	8" X 8" X 6" METAL JUNCTION BOX	1 UNIT
701192P	GROUND WIRE, NO. 8 AWG	390 L.F.
701204P	MULTIPLE LIGHTING WIRE, NO. 10 AWG	1 221 L.F.
703021M	SIGN LIGHTING, STRUCTURE NO. 16	LUMP SUM

NOTES:

1. ANY CONDUIT OR JUNCTION BOX FOUNDATION ABANDONED AND FOUND TO BE AN OBSTRUCTION SHALL BE REMOVED AND SHALL BE PAID FOR UNDER CLEARING SITE.
2. DEGREES SHOWN ADJACENT TO EACH LUMINAIRE REPRESENT THE LIGHTING ARM ANGLE RELATIVE TO THE NORTH ARROW DEPICTED ON THESE PLANS.
3. ROUTE FLEXIBLE METALLIC CONDUIT TO SIGN LIGHTING ASSEMBLY #16.
4. PROPOSED WIRES FOR CIRCUITS 6 AND 8 SHOULD BE SPLICED INTO THE EXISTING WIRES FOR CIRCUITS 6 AND 8.
5. SEE AS-BUILT PLANS FOR RT. 287 / 80 SECTION 10W & 11M / 3AH, PROJECT NO. I-287-2(44)35, FOR ADDITIONAL LIGHTING INFORMATION.
6. SEE BRIDGE PLANS FOR ROUTING OF CONDUIT ON BRIDGE AND LOCATION OF METAL JUNCTION BOX.

LUMINAIRE LEGEND

SYMBOL	DESCRIPTION
●	150W HIGH PRESSURE SODIUM VERTICAL LIGHTING UNIT
▽	250W HIGH PRESSURE SODIUM OFFSET LIGHTING UNIT
▽	250W HIGH PRESSURE SODIUM OFFSET LIGHTING UNIT
▼	150W HIGH PRESSURE SODIUM OFFSET LIGHTING UNIT
⬓	150W HIGH PRESSURE SODIUM UNDERDECK LIGHTING UNIT

LIGHTING NOTATION

L- 8-V-X
- L — LIGHT
- 8 — ARM LENGTH
- V — VERTICAL
- X — 150W HPS

L-E-S-40-X
- L-E-S — OFFSET
- 40 — POLE HEIGHT
- X — 150W HPS

L-E-S-40-Y
- L-E-S — OFFSET
- 40 — POLE HEIGHT
- Y — 250W HPS

SM-01-088
- SM — LOAD CENTER DESIGNATION
- 01 — CIRCUIT NUMBER
- 088 — LUMINAIRE NUMBER

AW-09-031
- AW — LOAD CENTER DESIGNATION
- 09 — CIRCUIT NUMBER
- 031 — LUMINAIRE NUMBER

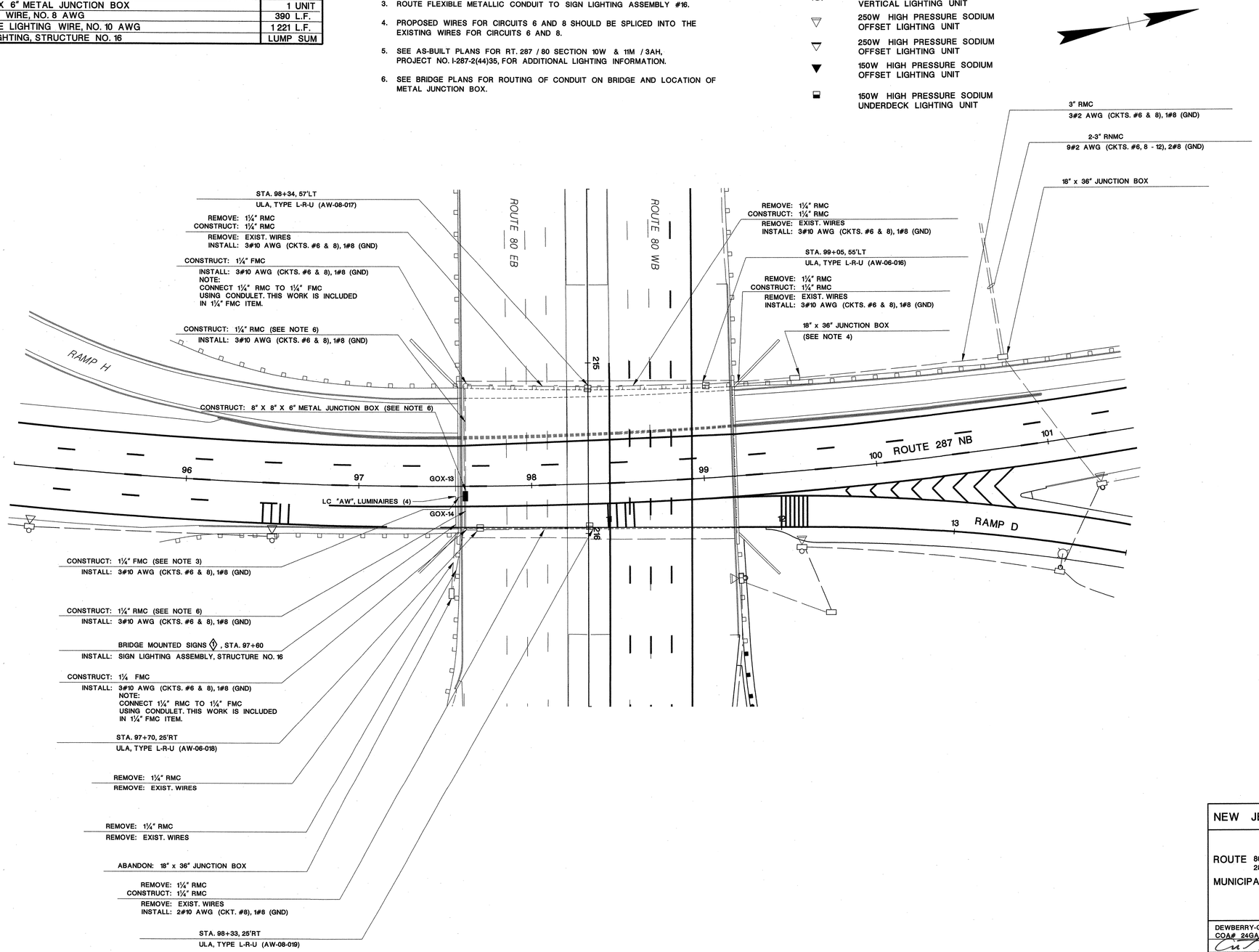

30' 20' 10' 0 30' 60'

HL-1 / HL-1

NEW JERSEY DEPARTMENT OF TRANSPORTATION

HIGHWAY LIGHTING PLANS

ROUTE 80 287 — SECTION 3A & 3B 12

MUNICIPALITY PARSIPPANY-TROY HILLS TOWNSHIP — COUNTY MORRIS

ROUTE 80 BRIDGES OVER ROUTE 287

CONTRACT No. 043003714

DEWBERRY-GOODKIND, INC.
COA# 24GA28047600
ANTHONY FULCO, P.E.
NEW JERSEY PROFESSIONAL ENGINEER LICENSE NO. 24GE03993900

REFERENCE
pen table =
scale =
queue =
date =
file =
ID =
jenglese 8/24/2010 9:06:46 AM OceTDS700-BW.plt 30-Scale 3056-SAFETY-Route80-287-V8 Q:\3056\SAFETY\CADD\Civil\Plans\Traffic-Electrical\HL305605 Re-Decking.dgn

STATE	FEDERAL PROJECT NO.
N.J.	BR-080-5(094)

LUMINAIRE LEGEND

SYMBOL	DESCRIPTION
36	PROPOSED 150 WATT HPS VERTICAL
71	EXISTING 150 WATT HPS VERTICAL LUMINAIRE
24	PROPOSED 250 WATT OFFSET LUMINAIRE
1	EXISTING 250 WATT OFFSET LUMINAIRE
	EXISTING 400 WATT OFFSET LUMINAIRE
	EXISTING 250 WATT MV SIGN LUMINAIRE
GO-22 GOX-13	PROPOSED 250 WATT MV SIGN LUMINAIRE
16	EXISTING 150 WATT HPS UNDERDECK LUMINAIRE

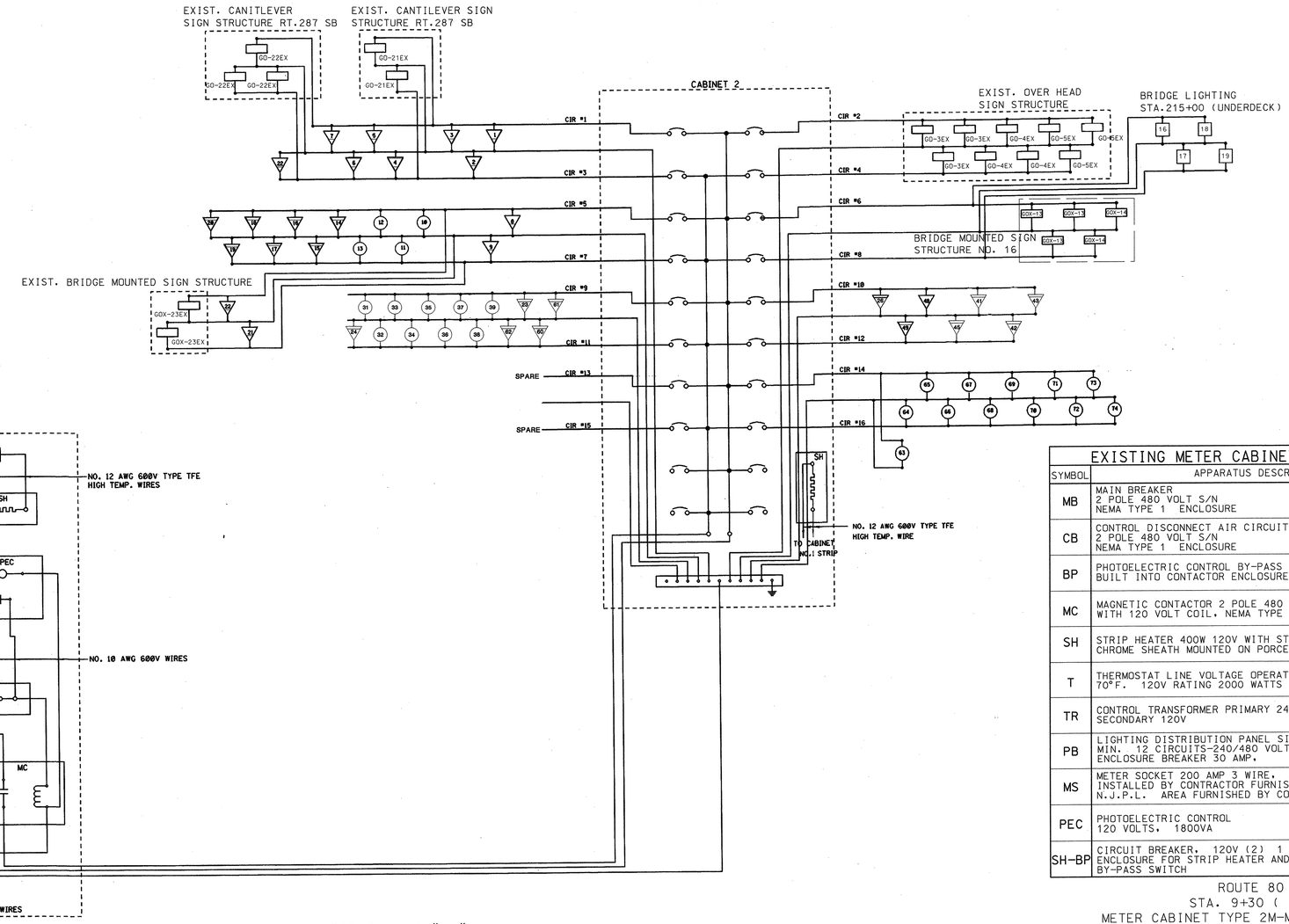

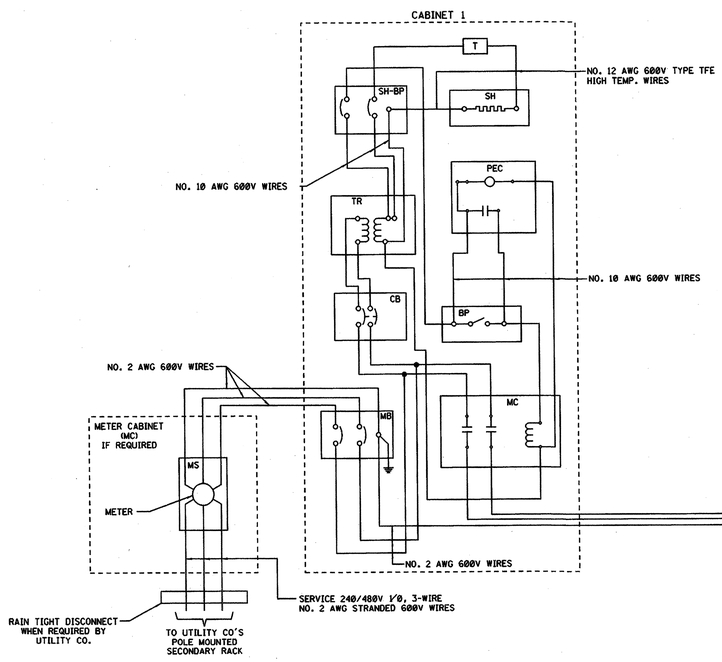

LOAD CENTER "AW"

NOTE:

1. SIGN PANELS GO-XXEX ARE EXISTING.

EXISTING METER CABINET TYPE 2M-MC

SYMBOL	APPARATUS DESCRIPTION	RATING
MB	MAIN BREAKER 2 POLE 480 VOLT S/N NEMA TYPE 1 ENCLOSURE	150 AMP. / 70 AMP.
CB	CONTROL DISCONNECT AIR CIRCUIT BREAKER 2 POLE 480 VOLT S/N NEMA TYPE 1 ENCLOSURE	15 AMP.
BP	PHOTOELECTRIC CONTROL BY-PASS SWITCH BUILT INTO CONTACTOR ENCLOSURE	15 AMP.
MC	MAGNETIC CONTACTOR 2 POLE 480 VOLT WITH 120 VOLT COIL, NEMA TYPE 1 ENCLOSURE	70 AMP.
SH	STRIP HEATER 400W 120V WITH STAINLESS STEEL OR CHROME SHEATH MOUNTED ON PORCELAIN STAND-OFF	N.A.
T	THERMOSTAT LINE VOLTAGE OPERATING RANGE 50°F. TO 70°F. 120V RATING 2000 WATTS SINGLE POLE	N.A.
TR	CONTROL TRANSFORMER PRIMARY 240/480V SECONDARY 120V	N.A.
PB	LIGHTING DISTRIBUTION PANEL SINGLE PHASE 3 WIRE S/N MIN. 12 CIRCUITS-240/480 VOLT DEAD FRONT PANEL-NO ENCLOSURE BREAKER 30 AMP. POLE	30 AMP. MAINS
MS	METER SOCKET 200 AMP 3 WIRE, 240/480 VOLT SINGLE Ø INSTALLED BY CONTRACTOR FURNISHED BY OTHERS, IN N.J.P.L. AREA FURNISHED BY CONTRACTOR	N.A.
PEC	PHOTOELECTRIC CONTROL 120 VOLTS, 1800VA	N.A.
SH-BP	CIRCUIT BREAKER, 120V (2) 1 POLE, NEMA TYPE 1 ENCLOSURE FOR STRIP HEATER AND PHOTOELECTRIC BY-PASS SWITCH	20 AMP. / 30 AMP.

ROUTE 80 INTERCHANGE
STA. 9+30 (LITTLETON ROAD)
METER CABINET TYPE 2M-MC, 240/480 V, 1/0, 3-WIRE
EXISTING LOAD CENTER "AW"
N.T.S

HLD-1 / HLD-2

NEW JERSEY DEPARTMENT OF TRANSPORTATION

HIGHWAY LIGHTING DETAILS

ROUTE 80 287 SECTION 3A & 3B 12

MUNICIPALITY PARSIPPANY-TROY HILLS TOWNSHIP COUNTY MORRIS

ROUTE 80 BRIDGES OVER ROUTE 287 NB AND SMITH ROAD
CONTRACT No. 04300374

DEWBERRY-GOODKIND, INC.
COA# 24GA28047600
ANTHONY FULCO, P.E.
NEW JERSEY PROFESSIONAL
ENGINEER LICENSE NO. 24GE03993900

pen table = scale = queue = date = file = ID = REFERENCE

jenglese 8/24/2010 9:07:40 AM OceTDS700-BW.plt 30-Scale 3056-SAFETY-Route80-287-V8 Q:\3056\SAFETY\CADD\Civil\Plans\Traffic-Electrical\HLD305602 RE-Decking.dgn

STATE	FEDERAL PROJECT NO.
N.J.	BR-080-5(094)

TABLE I

SIGN SUPPORT NUMBER	GO SIGN NUMBER	NUMBER OF FIXTURES	DIMENSIONS: SPACE "A"	SPACE "B"	SIZE OF SIGN: WIDTH	HEIGHT	TILT
1	GOX-1	3	10.0	4.0	28'-0"	10'-0"	12°
1	GOX-2	2	12.0	2.0	16'-0"	13'-0"	12°

PHOTOMETRIC DATA TABLE II
ILLUMINATION REQUIREMENTS

MIN. INITIAL AVG. FOOT CANDLES	MAX. FOOT CANDLES	MIN. FOOT CANDLES	UNIFORMITY RATIO MAX.-MIN.	SIZE OF SIGN: WIDTH	HEIGHT
27.22	49.08	8.58	5.7:1	28'-0"	10'-0"
36.85	60.17	12.92	4.7:1	16'-0"	13'-0"

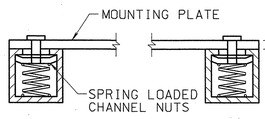

DETAIL "A"

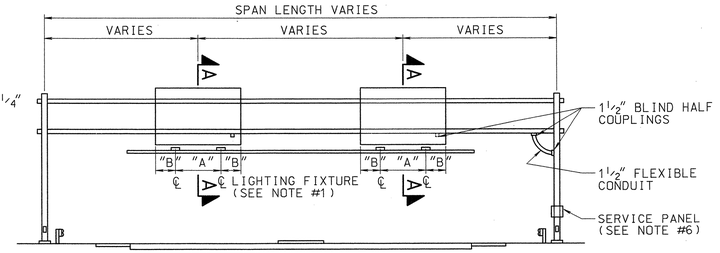

TYPICAL FULL ROADWAY SPAN STRUCTURE

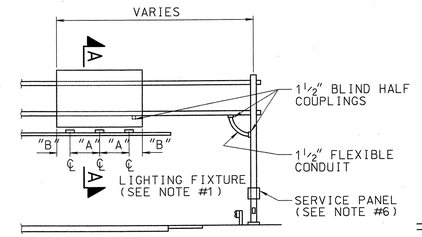

TYPICAL CANTILEVER OR HALF ROADWAY SPAN STRUCTURE

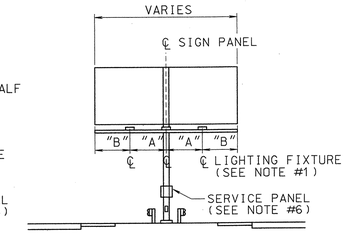

TYPICAL BUTTERFLY STRUCTURE

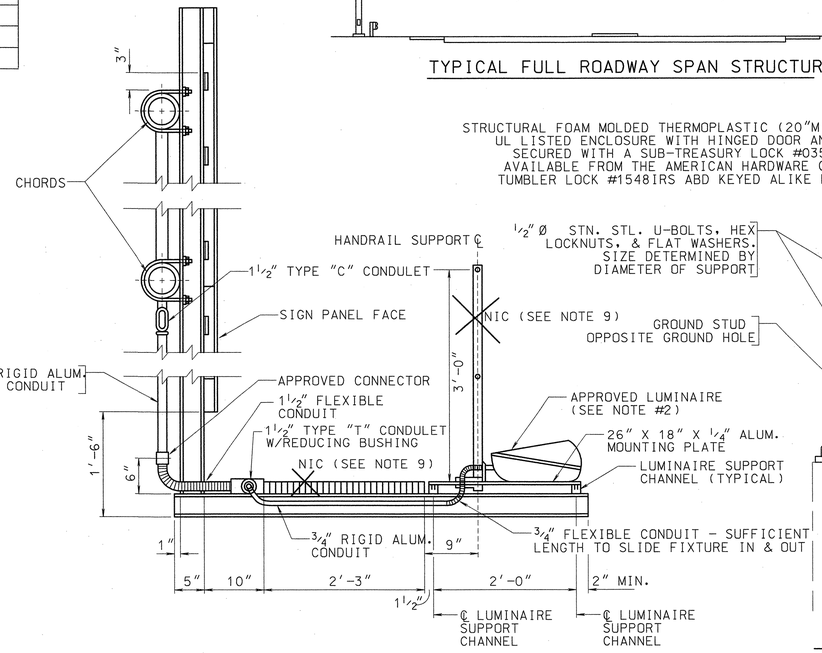

TYPICAL MAINTENANCE WALKWAY DETAILS (SEE NOTE 9)

SECTION A-A

(REFER TO "MAINTENANCE WALKWAY" PLATE NO. 3.9-9)

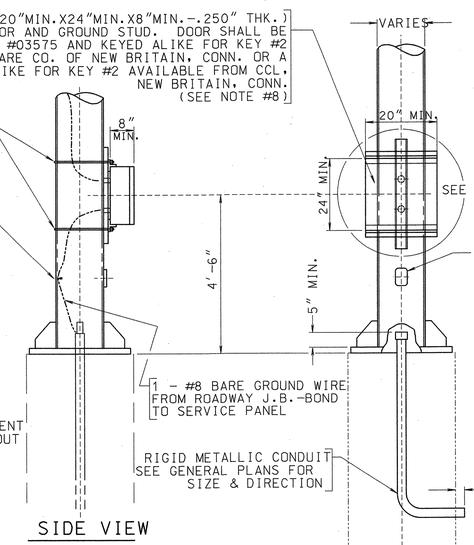

SIDE VIEW

ELEVATION - SERVICE PANEL AT SIGN STRUCTURE

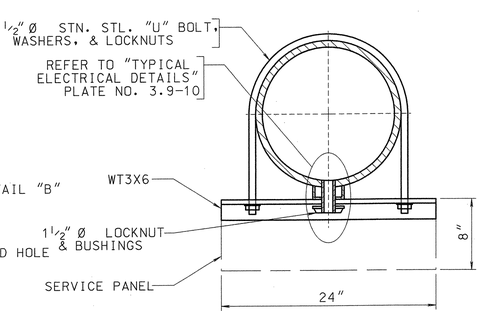

SECTION B-B

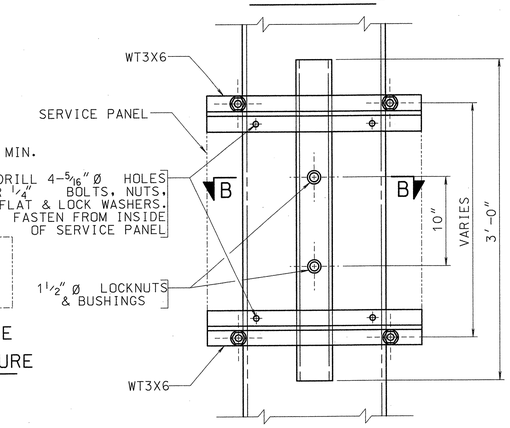

DETAIL "B"

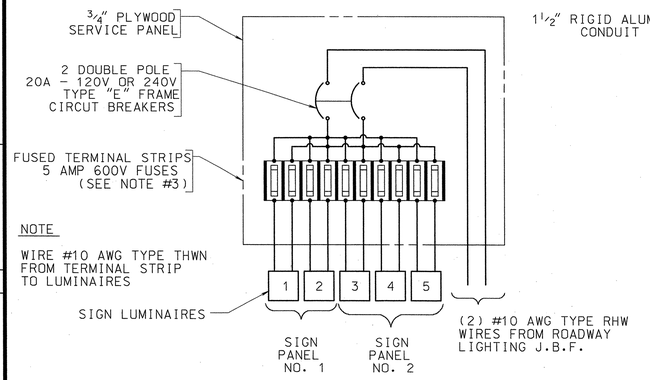

TYPICAL WIRING DIAGRAM FOR CIRCUITS WITHOUT NEUTRAL WIRE

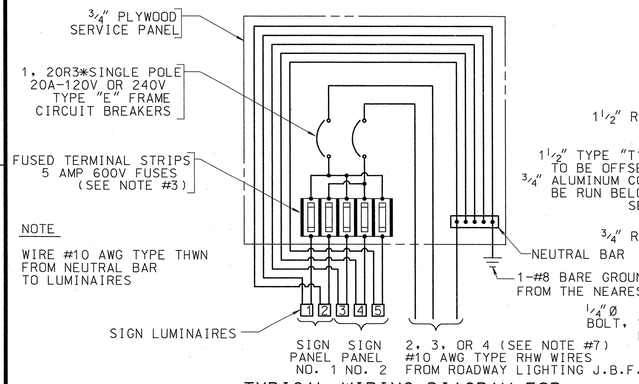

TYPICAL WIRING DIAGRAM FOR CIRCUITS WITH NEUTRAL WIRE

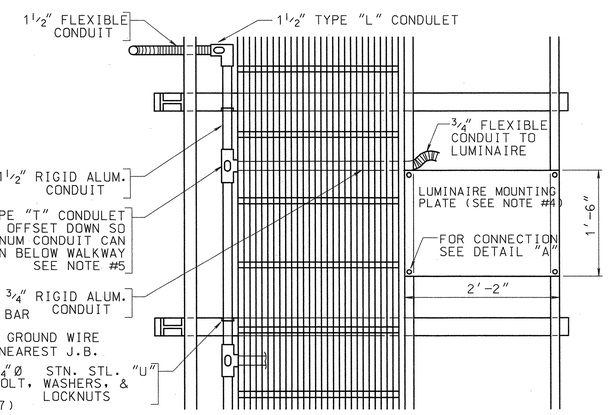

WALKWAY LIGHTING PLAN (SEE NOTE 9)

NOTES:

1. LIGHTING FIXTURE DIMENSIONS "A" & "B" SHALL BE AS SHOWN ON TABLE I.
2. PHOTOMETRIC REQUIREMENTS: 250 WATT MERCURY VAPOR SIGN LIGHTING LUMINAIRE, H37-5KC/DX, MOUNTED ONE FOOT BELOW BOTTOM EDGE AND FOUR AND ONE HALF FEET IN FRONT OF SIGN BOARD. THE PHOTOMETRIC DATA SHALL BE CALCULATED, FOLLOWING THE AASHTO STANDARDS FOR ROADWAY SIGN
3. TERMINAL STRIP SHALL BE THE TYPE WHICH ACCEPTS 13/32" X 1 1/2" FERRULE TYPE CARTRIDGE FUSES.
4. LUMINAIRE MOUNTING PLATES ARE PART OF THE LUMP SUM ELECTRICAL ITEM, "SIGN LIGHTING ASSEMBLY", AND SHALL BE PAID FOR AS SAME. MOUNTING PLATES MUST BE FIELD DRILLED TO CONFORM TO MOUNTING BOLT CIRCLES OF LUMINAIRES.
5. ALTERNATE CONDUIT ARRANGEMENT MAY BE SUBMITTED FOR APPROVAL TO THE ENGINEER.
6. REFER TO GENERAL PLANS FOR LOCATION AND DIRECTION OF SERVICE PANELS.
7. AS REQUIRED
8.
9. INSTALLED. SEE SPECIAL SPECIFICATIONS FOR SPECIFIC INFORMATION.

HLD-2 / HLD-2

NEW JERSEY DEPARTMENT OF TRANSPORTATION

HIGHWAY LIGHTING DETAILS

ROUTE 80 287 SECTION 3A & 3B 12

MUNICIPALITY PARSIPPANY-TROY HILLS TOWNSHIP COUNTY MORRIS

ROUTE 80 BRIDGES OVER ROUTE 287 NB AND SMITH ROAD
CONTRACT No. 043003714

DEWBERRY-GOODKIND, INC.
COA# 24GA28047800
8/24/10
ANTHONY FULCO, P.E.
NEW JERSEY PROFESSIONAL ENGINEER LICENSE NO. 24GE03993900

pen table = REFERENCE
scale = REFERENCE
queue = enabd
date =
file =
ID =
jenglese 8/24/2010 9:08:28 AM OceTDS700-BW.plt 30-Scale 3056-SAFETY-Route80-287-V8 Q:\3056\SAFETY\CADD\Civil\Plans\Traffic-Electrical\HLD305605 Re-Decking.dgn

STATE	FEDERAL PROJECT NO.
NJ	BR-080-5(094)

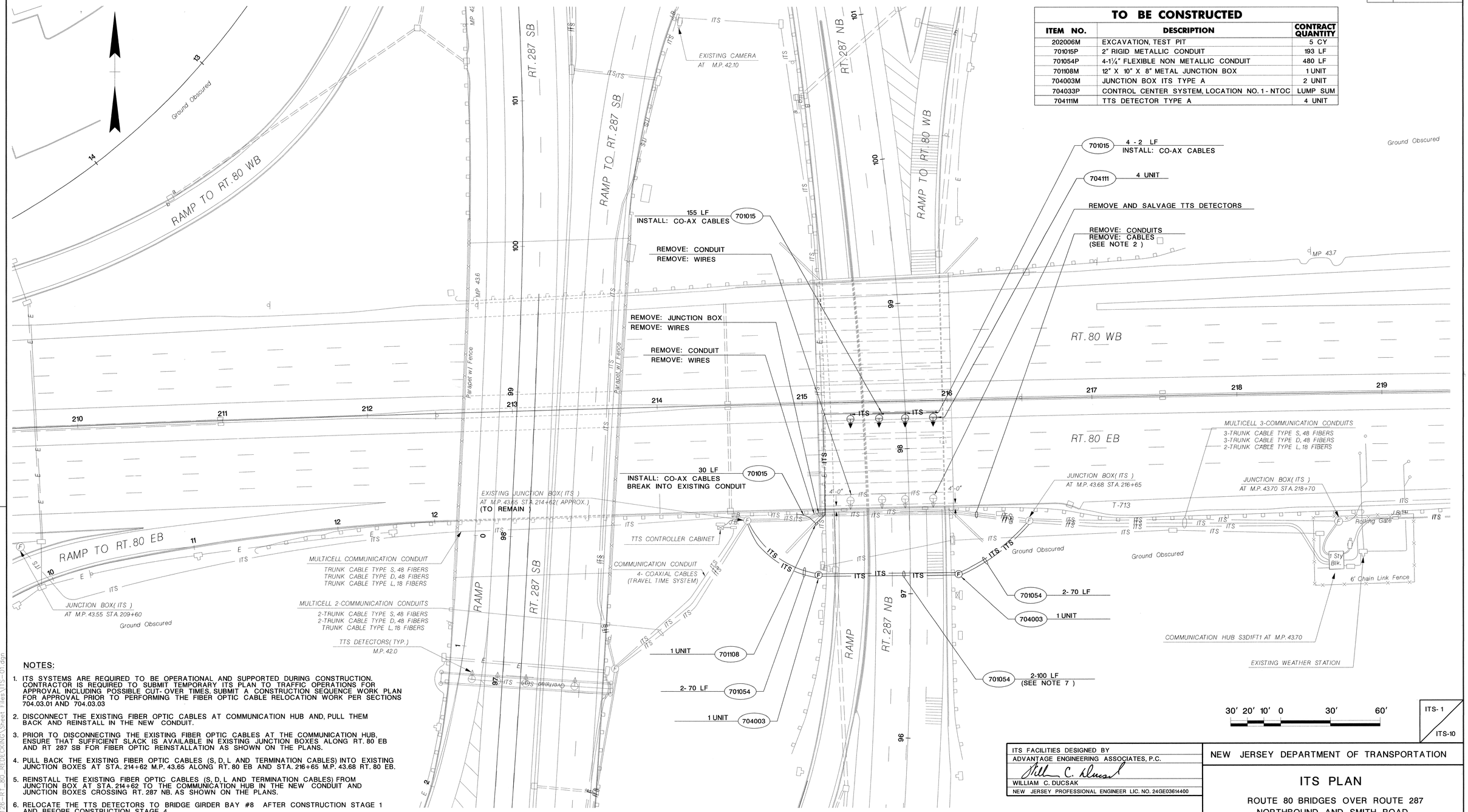

TO BE CONSTRUCTED		
ITEM NO.	DESCRIPTION	CONTRACT QUANTITY
202006M	EXCAVATION, TEST PIT	5 CY
701015P	2" RIGID METALLIC CONDUIT	193 LF
701054P	4-1¼" FLEXIBLE NON METALLIC CONDUIT	480 LF
701108M	12" X 10" X 8" METAL JUNCTION BOX	1 UNIT
704003M	JUNCTION BOX ITS TYPE A	2 UNIT
704033P	CONTROL CENTER SYSTEM, LOCATION NO. 1 - NTOC	LUMP SUM
704111M	TTS DETECTOR TYPE A	4 UNIT

NOTES:

1. ITS SYSTEMS ARE REQUIRED TO BE OPERATIONAL AND SUPPORTED DURING CONSTRUCTION. CONTRACTOR IS REQUIRED TO SUBMIT TEMPORARY ITS PLAN TO TRAFFIC OPERATIONS FOR APPROVAL INCLUDING POSSIBLE CUT- OVER TIMES. SUBMIT A CONSTRUCTION SEQUENCE WORK PLAN FOR APPROVAL PRIOR TO PERFORMING THE FIBER OPTIC CABLE RELOCATION WORK PER SECTIONS 704.03.01 AND 704.03.03
2. DISCONNECT THE EXISTING FIBER OPTIC CABLES AT COMMUNICATION HUB AND, PULL THEM BACK AND REINSTALL IN THE NEW CONDUIT.
3. PRIOR TO DISCONNECTING THE EXISTING FIBER OPTIC CABLES AT THE COMMUNICATION HUB, ENSURE THAT SUFFICIENT SLACK IS AVAILABLE IN EXISTING JUNCTION BOXES ALONG RT. 80 EB AND RT 287 SB FOR FIBER OPTIC REINSTALLATION AS SHOWN ON THE PLANS.
4. PULL BACK THE EXISTING FIBER OPTIC CABLES (S, D, L AND TERMINATION CABLES) INTO EXISTING JUNCTION BOXES AT STA. 214+62 M.P. 43.65 ALONG RT. 80 EB AND STA. 216+65 M.P. 43.68 RT. 80 EB.
5. REINSTALL THE EXISTING FIBER OPTIC CABLES (S, D, L AND TERMINATION CABLES) FROM JUNCTION BOX AT STA. 214+62 TO THE COMMUNICATION HUB IN THE NEW CONDUIT AND JUNCTION BOXES CROSSING RT. 287 NB. AS SHOWN ON THE PLANS.
6. RELOCATE THE TTS DETECTORS TO BRIDGE GIRDER BAY #8 AFTER CONSTRUCTION STAGE 1 AND BEFORE CONSTRUCTION STAGE 4.
7. INSTALL 5" PROTECTIVE SLEEVE "SCHEDULE 80 PVC" MINIMUM.
8. STANDARD PROVISIONS 105 AND 701 APPLY FOR EXISTING ITS SYSTEMS.
9. NOTIFY TRAFFIC OPERATIONS PRIOR TO BEGINNING WORK.
10. INSTALLATION OF CONDUIT AND FIBER INCLUDES RESPLICING AND TESTING OF AFFECTED SYSTEMS ONCE COMPLETED.

ITS FACILITIES DESIGNED BY
ADVANTAGE ENGINEERING ASSOCIATES, P.C.
WILLIAM C. DUCSAK
NEW JERSEY PROFESSIONAL ENGINEER LIC. NO. 24GE03614400

NEW JERSEY DEPARTMENT OF TRANSPORTATION

ITS PLAN

ROUTE 80 BRIDGES OVER ROUTE 287
NORTHBOUND AND SMITH ROAD
CONTRACT NO. 043003714

DEWBERRY-GOODKIND, INC.
COA# 24GA28047600

ANTHONY FULCO, P.E.
NEW JERSEY PROFESSIONAL ENGINEER LICENSE NO. 39939

ITS-1
ITS-10

ADVANTAGE ENGINEERING ASSOCIATES, P.C.

MODEL	Default	PROJECT #	1126-RT_80_REDECKING
USERNAME	dhallwoh	PROJECT NAME	ROUTE_80_REDECKING
PLOT DATE	7/30/2010 3:55:46 PM	PLOTDRIVER	...\pltcfg\1126-RT_80_Pdf.pltcfg
DWG. NAME	L:\CADD\1126-RT_80_REDECKING\Sheet Files\ITS-01.dgn		

STATE	FEDERAL PROJECT NO.
NJ	BR-080-5(094)

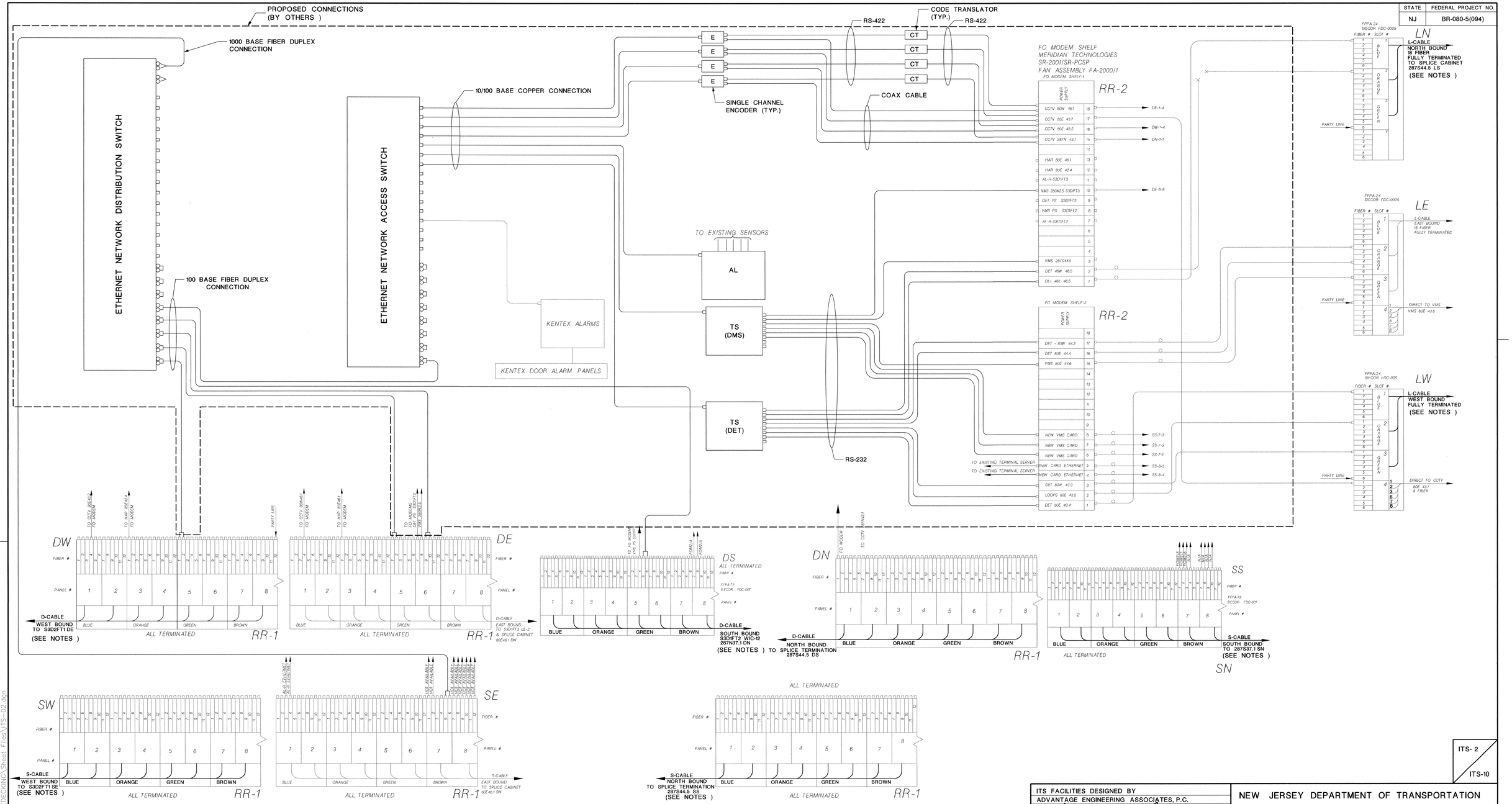

NOTES:

1. DISCONNECT, PULL OUT AND REINSTALL CABLES.
2. VERIFY AND DOCUMENT THE EXISTING ITS SYSTEMS OPERATIONS AND FIBER OPTIC CABLE CONDITIONS PER SECTION 701.03.01. IDENTIFY THE EXISTING FIBER OPTIC CABLES AT THE FIELD SITE JUNCTION BOXES AND IN THE COMMUNICATIONS HUB THAT ARE TO BE DISCONNECTED FROM THE PATCH PANELS, AND INCLUDE THE EXISTING PATCH PANEL CROSS CONNECTIONS FOR EACH CABLE TO BE REMOVED.
3. COORDINATE ALL WORK AND SYSTEM DOWNTIME WITH THE NJ STATEWIDE TRAFFIC OPERATIONS, ITS ENGINEERING, AND INFORMATION TECHNOLOGY, AND ADESTA, LLC (NJTA).
4. DO NOT CUT ANY CABLES.

S3D1FT1
RT. 80 EB MP. 43.7

ITS FACILITIES DESIGNED BY
ADVANTAGE ENGINEERING ASSOCIATES, P.C.
WILLIAM C. DUCSAK
NEW JERSEY PROFESSIONAL ENGINEER LIC. NO. 24GE03614400

NEW JERSEY DEPARTMENT OF TRANSPORTATION

BLOCK DIAGRAM- S3D1FT1

ROUTE 80 BRIDGES OVER ROUTE 287
NORTHBOUND AND SMITH ROAD
CONTRACT NO. 043003714

DEWBERRY-GOODKIND, INC.
COA# 24GA28047600
ANTHONY FULCO, P.E.
NEW JERSEY PROFESSIONAL ENGINEER LICENSE NO. 39939

ITS- 2 / ITS-10

ADVANTAGE ENGINEERING ASSOCIATES P.C.

MODEL	Default
USERNAME	dhaliwalh
PLOT DATE	7/30/2010 3:55:49 PM
DWG. NAME	L:\CADD\1126-RT_80_REDECKING\Sheet Files\ITS-02.dgn
PROJECT #	1126-RT_80_REDECKING
PROJECT NAME	ROUTE 80 REDECKING
PLOTDRIVER	\pltcfg\1126-RT_80_Pdf.pltcfg

STATE	FEDERAL PROJECT NO.
NJ	BR-080-5(094)

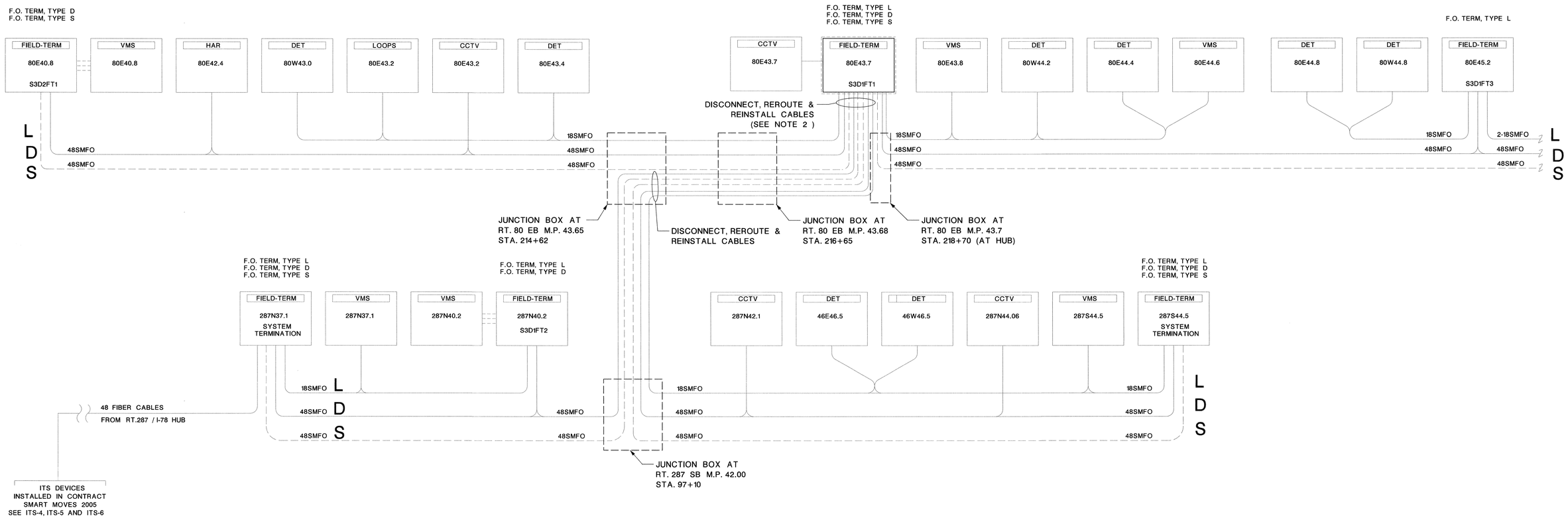

LEGEND

80E61.0	80 - ROUTE NUMBER	L	- LOCAL CABLE
	E - DIRECTION	D	- DISTRIBUTION CABLE
	61.0 - MILEPOST	S	- SYSTEM CABLE

DET	=	DETECTOR - SPEED/COUNT
VMS	=	VARIABLE MESSAGE SIGN
CCTV	=	CLOSED CIRCUIT TELEVISION
HAR	=	HIGHWAY ADVISORY RADIO
LOOPS	=	LOOP DETECTORS
VID-DET	=	VIDEO IMAGING DETECTOR
SPLICE	=	PATCH PANEL SPLICE BOX
RTF	=	REMOTE TERMINAL FACILITY

= FIELD TERMINAL CONNECTED DIRECTLY TO FIELD EQUIPMENT VIA TELEPHONE CABLE.

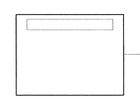

= FIELD TERMINAL CONNECTED DIRECTLY TO FIELD EQUIPMENT VIA TERMINATION CABLE, 8 FIBERS. (8 SMFO)

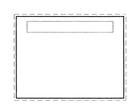

= FIELD TERMINAL WITH MORE THAN TWO BRANCHES. (SHOWN MORE THAN ONCE ON DIAGRAM)

F.O. SPLICE, 18 FIBERS FOR L CABLE AT TERMINATION POINT TO TERMINATION CABLE, 8 FIBERS

F.O. SPLICE, 18 FIBERS FOR L CABLE TO TERMINATION CABLE, 8 FIBERS

MULTIPLE F.O. SPLICE, 18 FIBERS FOR L CABLE TO TERMINATION CABLE, 8 FIBERS

F.O. SPLICE, 48 FIBERS FOR D CABLE TO TERMINATION CABLE, 8 FIBERS

F.O. SPLICE, 48 FIBERS FOR S CABLE

NOTES:

1. PERFORM LEVEL 2 TESTING BETWEEN FIELD TERMINALS:
   A. RT. 80 EB 40.8 AND RT. 80 EB 43.7
   B. RT. 287 N 37.1 AND RT. 80 EB 43.7
   C. RT. 287 S 44.5 AND RT. 80 EB 43.7
2. EXISTING INFORMATION WAS OBTAINED FROM AVAILABLE AS BUILT PLANS PREPARED UNDER "ROUTE 80 MAGIC CONTRACT NO. 1A, SMART MOVES 2005 AND ROUTE 80 ITS COMMUNICATIONS NETWORK." FIELD VERIFY THE INFORMATION AND DOCUMENT PER SECTION 701.03.01 AND SECTION 704.03.01.

FIBER OPTIC COMMUNICATION & SYSTEM EQUIPMENT DETAIL

ITS- 3 / ITS-10

ITS FACILITIES DESIGNED BY
ADVANTAGE ENGINEERING ASSOCIATES, P.C.
WILLIAM C. DUCSAK
NEW JERSEY PROFESSIONAL ENGINEER LIC. NO. 24GE03614400

NEW JERSEY DEPARTMENT OF TRANSPORTATION

COMMUNICATION WIRING DETAIL

ROUTE 80 BRIDGES OVER ROUTE 287
NORTHBOUND AND SMITH ROAD
CONTRACT NO. 043003714

DEWBERRY-GOODKIND, INC.
COA# 24GA28047600
8/24/10
ANTHONY FULCO, P.E.
NEW JERSEY PROFESSIONAL ENGINEER LICENSE NO. 39939

ADVANTAGE ENGINEERING ASSOCIATES, P.C.
MODEL Default
USERNAME dhaliwah
PLOT DATE 7/30/2010 3:55:54 PM
DWG. NAME ...\CADD\1126-RT_80_REDECKING\Sheet Files\ITS-03.dgn
PROJECT # 1126-RT_80_REDECKING
PROJECT NAME ROUTE 80 REDECKING
PLOTDRIVER ...\pltcfg\1126-RT_80_Pdf.pltcfg

STATE	FEDERAL PROJECT NO.
NJ	BR-080-5(094)

NTOC Cam ID	Location	Local ID	Encoder	Decoder (HE)	Video Stream
120	Rt. 287 & Mt. Airy Rd.	56	10.9.96.41	10.9.96.40	239.9.96.41
121	Rt. 287 & N. Maple Ave.	57	10.9.96.39	10.9.96.38	239.9.96.39
122	Rt. 287 & James St.	58	10.9.96.37	10.9.96.36	239.9.96.36
123	Rt. 287 & Rt. 24	59	10.9.96.35	10.9.96.34	239.9.96.35
124	Rt. 287 & Rt. 10	60	10.9.96.33	10.9.96.32	239.9.96.33
125	Rt. 287 & Intervale	61	10.9.96.31	10.9.96.30	239.9.96.30
126	Rt. 287 NB & 78	126	10.9.96.45	10.9.96.44	239.9.96.44
127	Rt. 287 SB & 78	127	10.9.96.43	10.9.96.42	239.9.96.42

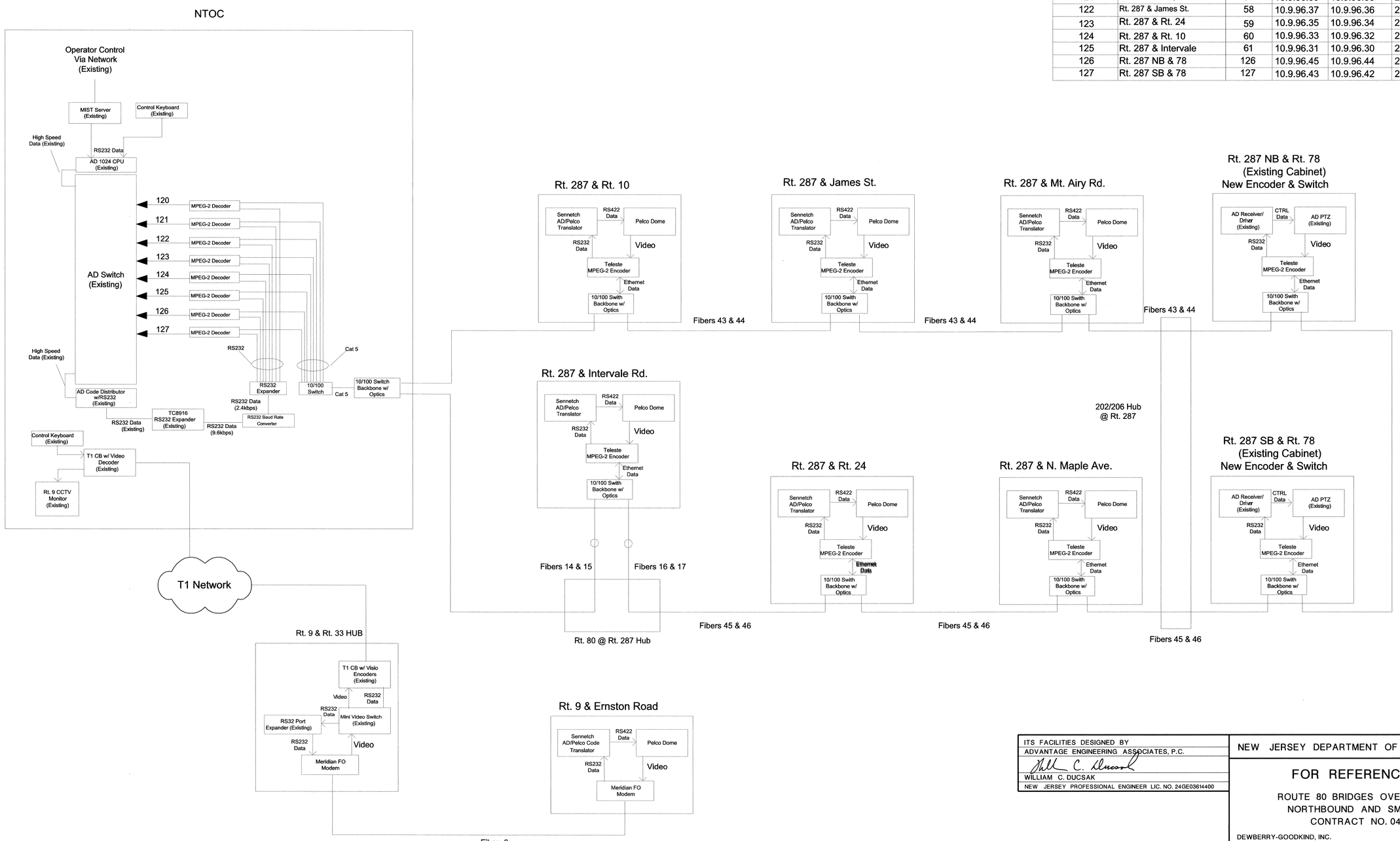

THIS SHEET AS PREPARED UNDER SMART MOVES 2005

ITS FACILITIES DESIGNED BY
ADVANTAGE ENGINEERING ASSOCIATES, P.C.
WILLIAM C. DUCSAK
NEW JERSEY PROFESSIONAL ENGINEER LIC. NO. 24GE03614400

NEW JERSEY DEPARTMENT OF TRANSPORTATION

FOR REFERENCE ONLY

ROUTE 80 BRIDGES OVER ROUTE 287
NORTHBOUND AND SMITH ROAD
CONTRACT NO. 043003714

DEWBERRY-GOODKIND, INC.
COA# 24GA28047600

8/24/10
ANTHONY FULCO, P.E.
NEW JERSEY PROFESSIONAL ENGINEER LICENSE NO. 39939

ITS- 4
ITS-10

52
129

ADVANTAGE ENGINEERING ASSOCIATES, P.C.

MODEL	Layout1	PROJECT #	1126-RT_80_REDECKING
USERNAME	dhaliwah	PROJECT NAME	ROUTE_80_REDECKING
PLOT DATE	7/30/2010 3:55:57 PM	PLOTDRIVER	...\pltcfg\1126-RT_80_Pdf.pltcfg
DWG. NAME	L:\CADD\1126-RT_80_REDECKING\Sheet Files\ITS-04.dgn		

STATE	FEDERAL PROJECT NO.
NJ	BR-080-5(094)

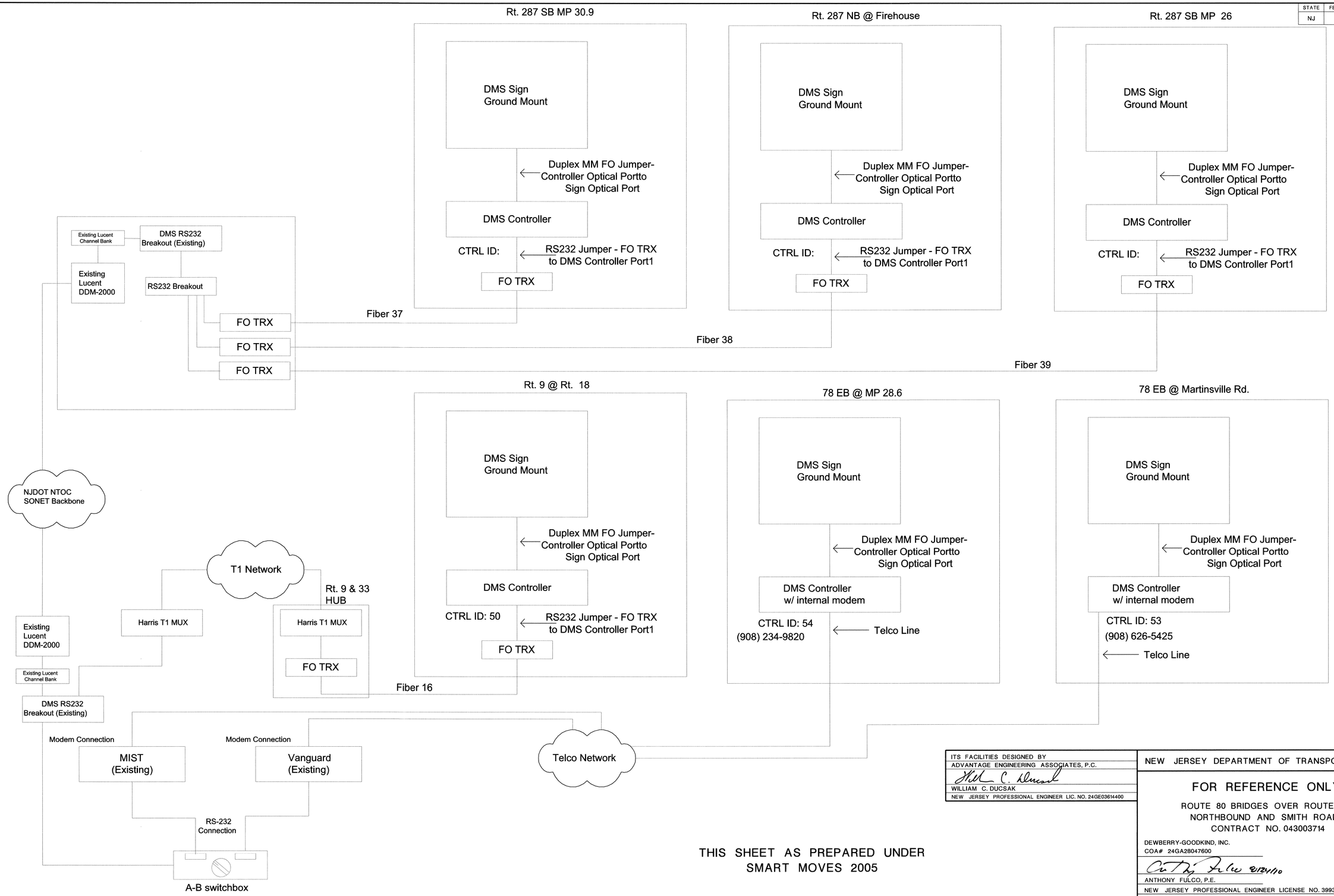

ITS- 5
ITS-10

ITS FACILITIES DESIGNED BY
ADVANTAGE ENGINEERING ASSOCIATES, P.C.
WILLIAM C. DUCSAK
NEW JERSEY PROFESSIONAL ENGINEER LIC. NO. 24GE03614400

NEW JERSEY DEPARTMENT OF TRANSPORTATION

FOR REFERENCE ONLY

ROUTE 80 BRIDGES OVER ROUTE 287
NORTHBOUND AND SMITH ROAD
CONTRACT NO. 043003714

DEWBERRY-GOODKIND, INC.
COA# 24GA28047600

02/24/10
ANTHONY FULCO, P.E.
NEW JERSEY PROFESSIONAL ENGINEER LICENSE NO. 39939

THIS SHEET AS PREPARED UNDER SMART MOVES 2005

ADVANTAGE ENGINEERING ASSOCIATES, P.C.

MODEL	layout1
USERNAME	dhollwoh
PLOT DATE	7/30/2010 3:56:01 PM
DWG. NAME	I:\CADD\1126-RT_80_REDEKING\Sheet Files\ITS-05.dgn
PROJECT #	1126-RT_80_REDEKING
PROJECT NAME	ROUTE_80_REDEKING
PLOTDRIVER	\pltcfg\1126-RT_80_Pdf.pltcfg

STATE	FEDERAL PROJECT NO.
NJ	BR-080-5(094)

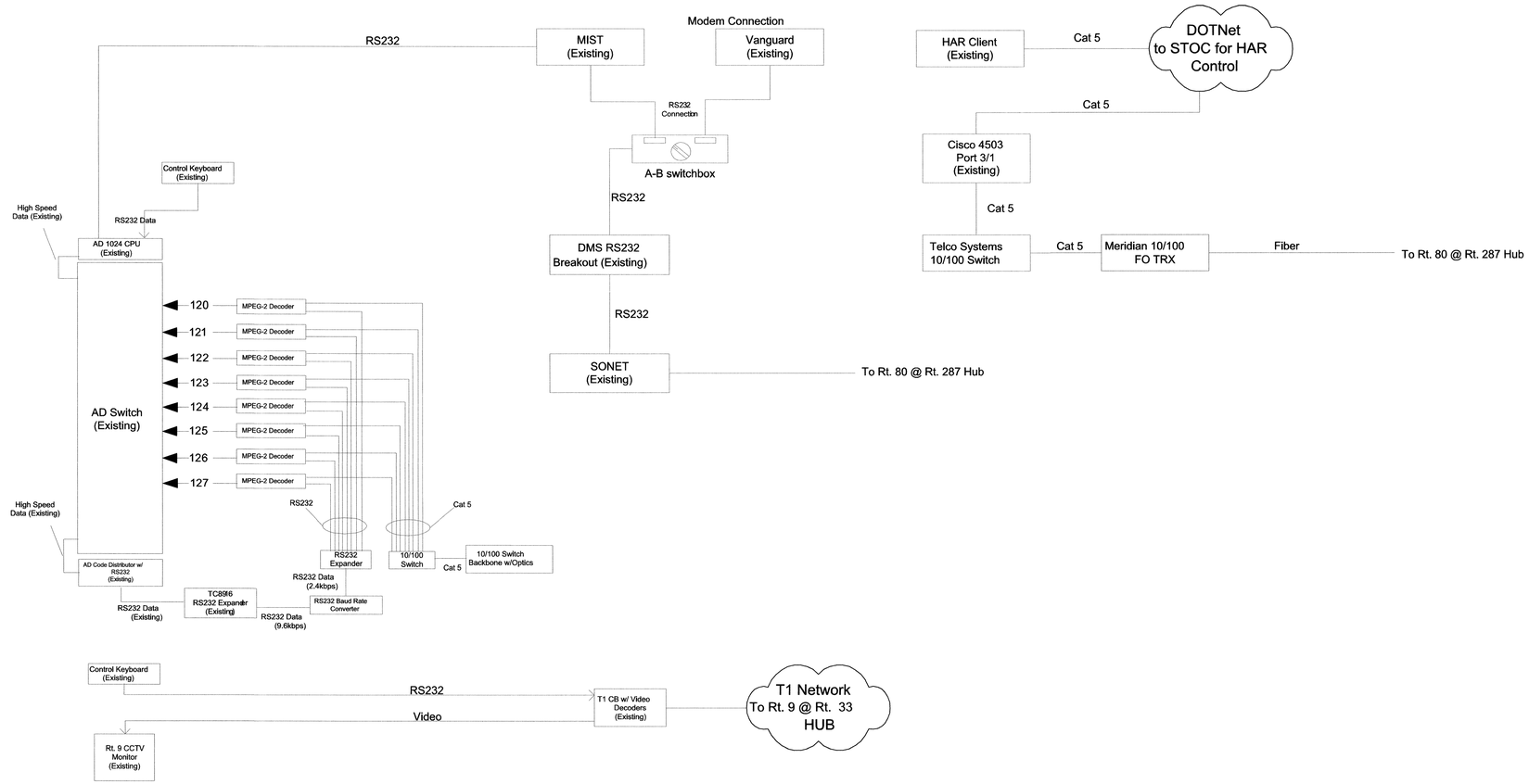

THIS SHEET AS PREPARED UNDER
SMART MOVES 2005

ITS- 6
ITS-10

ITS FACILITIES DESIGNED BY
ADVANTAGE ENGINEERING ASSOCIATES, P.C.
WILLIAM C. DUCSAK
NEW JERSEY PROFESSIONAL ENGINEER LIC. NO. 24GE03614400

NEW JERSEY DEPARTMENT OF TRANSPORTATION

FOR REFERENCE ONLY

ROUTE 80 BRIDGES OVER ROUTE 287
NORTHBOUND AND SMITH ROAD
CONTRACT NO. 043003714

DEWBERRY-GOODKIND, INC.
COA# 24GA28047600

9/24/10
ANTHONY FULCO, P.E.
NEW JERSEY PROFESSIONAL ENGINEER LICENSE NO. 39939

ADVANTAGE ENGINEERING ASSOCIATES, P.C.

MODEL	ayout1	PROJECT #	1126-RT_80_REDECKING
USERNAME	dhaliwalh	PROJECT NAME	ROUTE 80 REDECKING
PLOT DATE	7/30/2010 3:56:04 PM	PLOTDRIVER	...\pltcfg\1126-RT_80_Pdf.pltcfg
DWG. NAME	...\CADD\1126-RT_80_REDECKING\Sheet Files\ITS-06.dgn		

STATE	FEDERAL PROJECT NO.
NJ	BR-080-5(094)

CABLE # 'D' 48 FIBER ORANGE STRIPE LOCATION 287N M.P. 37.1
SPLICE DESIG. FIELD TERM. S3D1FT1

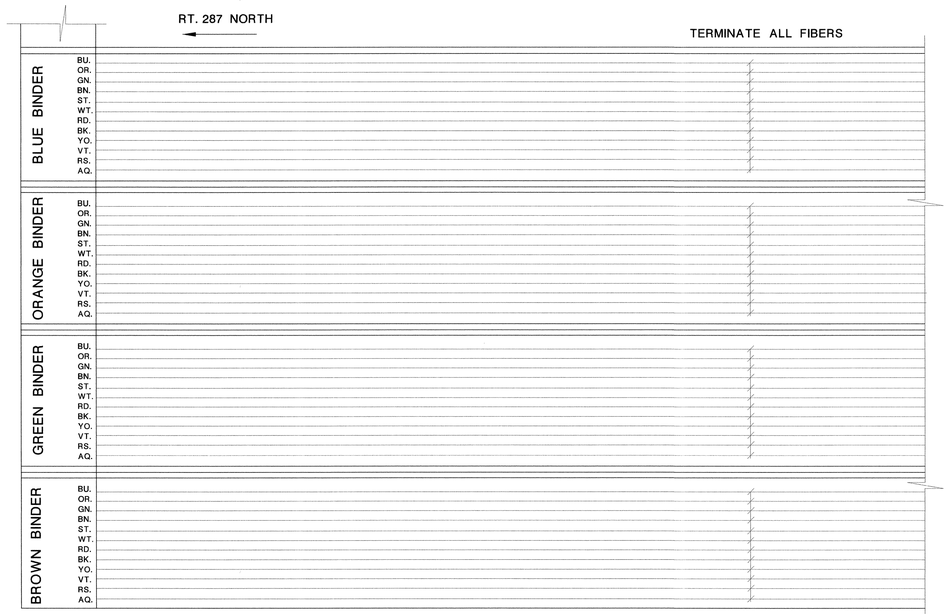

287N M.P. 37.1 C-113

SPLICE TYPE 'A'

18 FIBERS TYPE 'L' CABLE WHITE STRIPE
TO 8 FIBERS TYPE 'B' CABLE RED STRIPE

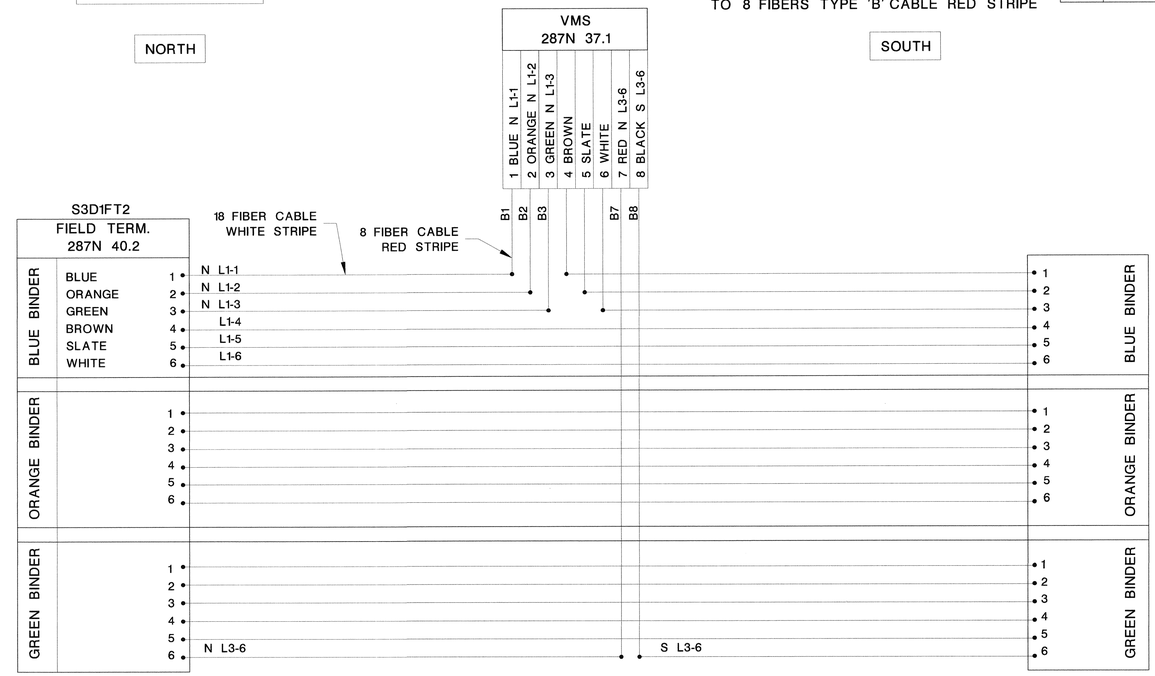

CABLE # 'S' 48 FIBER GREEN STRIPE LOCATION 80E M.P. 43.7
SPLICE DESIG. FIELD TERM. S3D1FT1

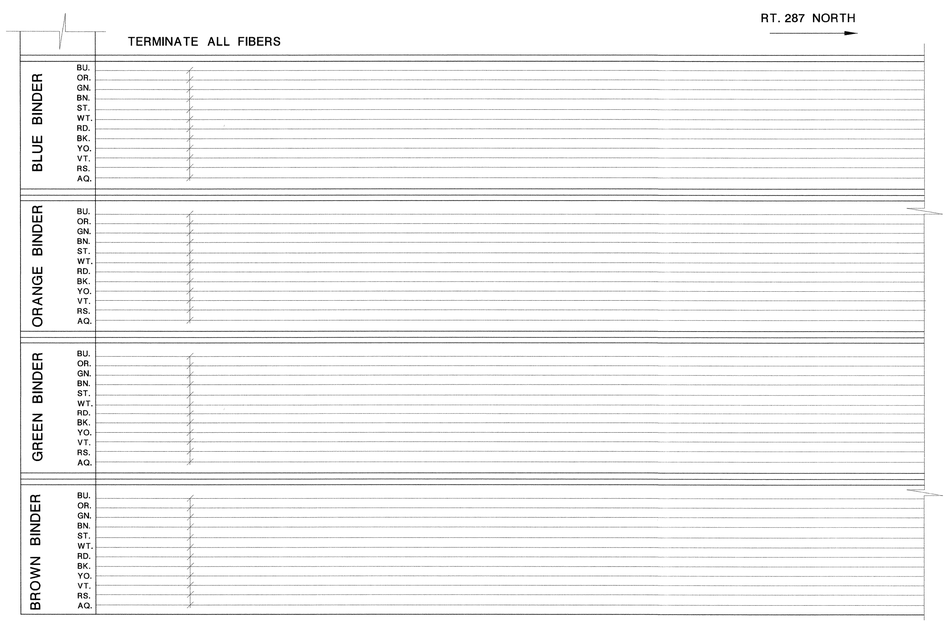

287N M.P. 40.2 C-120

SPLICE TYPE 'H'

8 FIBERS CABLE 'B' TYPE RED STRIPE
TO 48 FIBER D CABLE ORANGE STRIPE

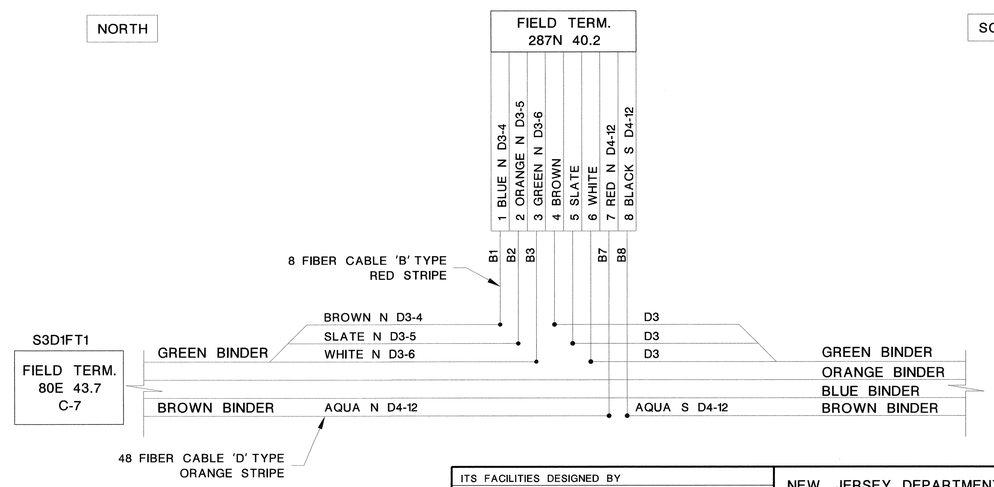

ITS FACILITIES DESIGNED BY
ADVANTAGE ENGINEERING ASSOCIATES, P.C.
WILLIAM C. DUCSAK
NEW JERSEY PROFESSIONAL ENGINEER LIC. NO. 24GE03614400

THIS SHEET AS PREPARED UNDER
RT. 80 MAGIC CONTRACT - 1A

ITS- 7
ITS-10

NEW JERSEY DEPARTMENT OF TRANSPORTATION

FOR REFERENCE ONLY

ROUTE 80 BRIDGES OVER ROUTE 287
NORTHBOUND AND SMITH ROAD
CONTRACT NO. 043003714

DEWBERRY-GOODKIND, INC.
COA# 24GA28047600

8/24/10
ANTHONY FULCO, P.E.
NEW JERSEY PROFESSIONAL ENGINEER LICENSE NO. 39939

ADVANTAGE ENGINEERING ASSOCIATES, P.C.

MODEL	Layout1	PROJECT #	1126-RT_80_REDECKING
USERNAME	dhaliwalh	PROJECT NAME	ROUTE 80 REDECKING
PLOT DATE	7/30/2010 3:56:07 PM	PLOTDRIVER	...\pltcfg\1126-RT_80_Pdf.pltcfg
DWG. NAME	L:\CADD\1126-RT_80_REDECKING\Sheet Files\ITS-07.dgn		

STATE	FEDERAL PROJECT NO.
NJ	BR-080-5(094)

CABLE # 'S' 48 FIBER GREEN STRIPE
SPLICE DESIG. FIELD TERM.
DWG. REF. 364

LOCATION 80E M.P. 40.8
S3D2FT1

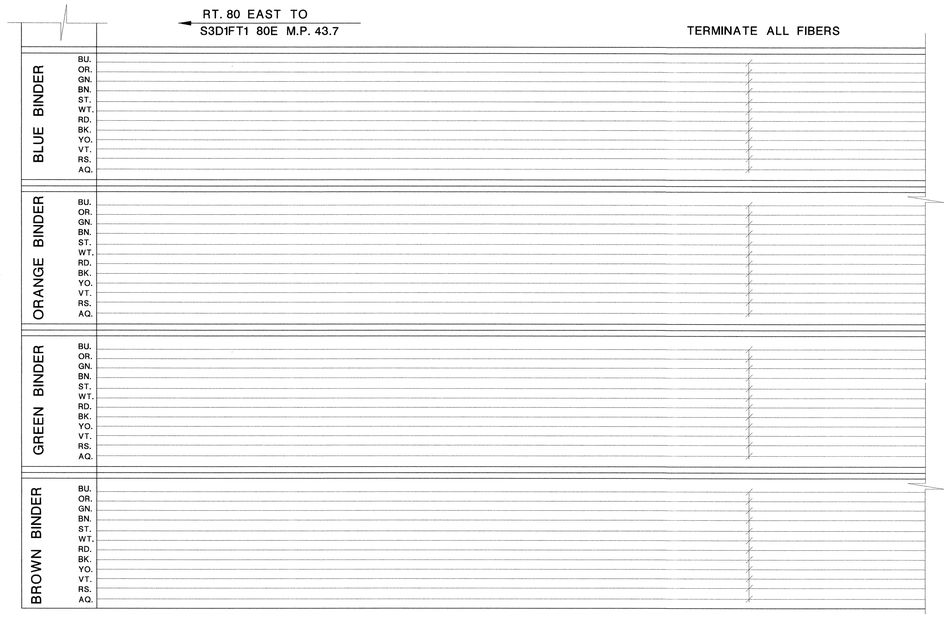

80E M.P. 43.2 C-6

SPLICE TYPE 'B'

18 FIBERS TYPE 'L' CABLE WHITE STRIPE
TO 8 FIBERS TYPE 'B' CABLE RED STRIPE

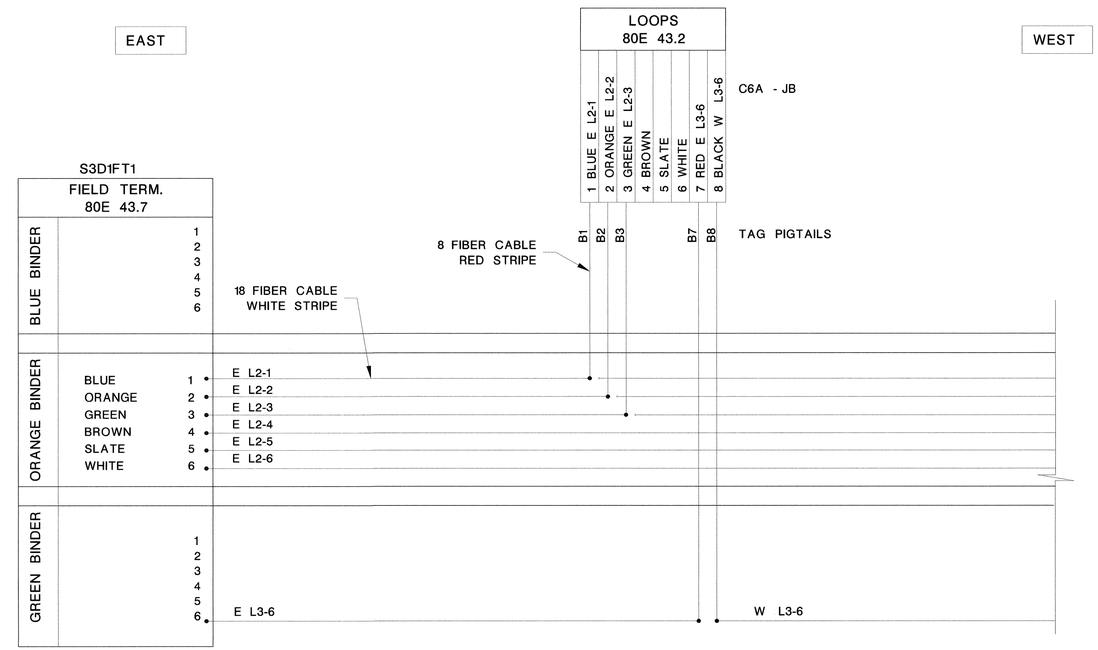

CABLE # 'D' S3D1FT1
SPLICE DESIG. FIELD TERM.
DWG. REF. 362

LOCATION 80E M.P. 40.8
S3D2FT1

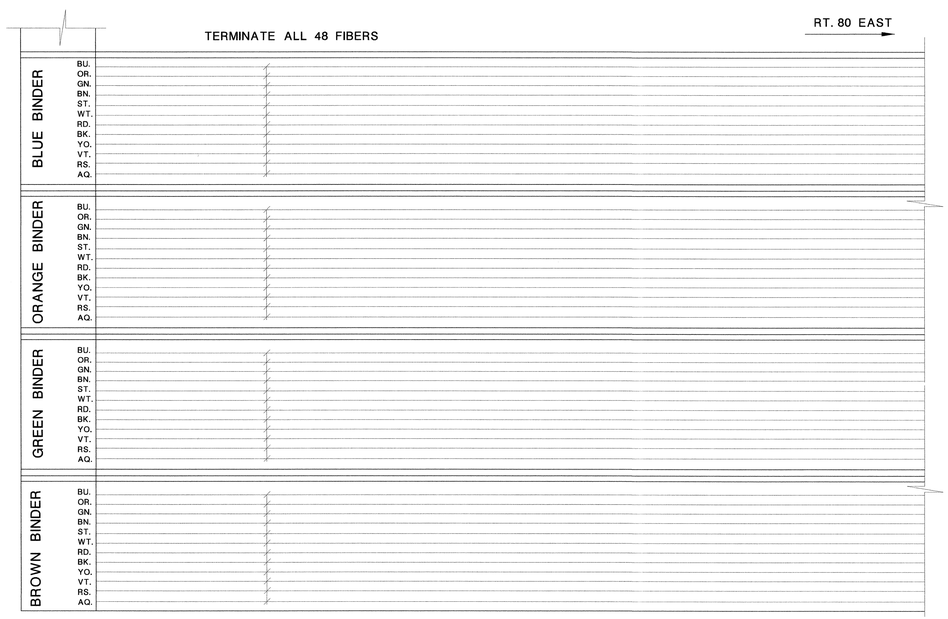

80E M.P. 43.2 C-6

SPLICE TYPE 'D'

48 FIBERS TYPE 'D' CABLE ORANGE STRIPE
TO 8 FIBERS TYPE 'B' CABLE RED STRIPE

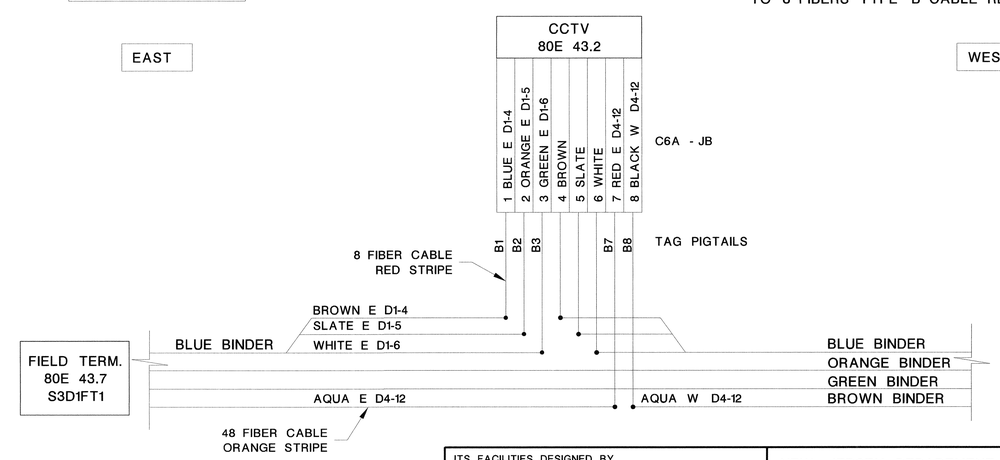

ITS- 8
ITS-10

ITS FACILITIES DESIGNED BY
ADVANTAGE ENGINEERING ASSOCIATES, P.C.
WILLIAM C. DUCSAK
NEW JERSEY PROFESSIONAL ENGINEER LIC. NO. 24GE03614400

NEW JERSEY DEPARTMENT OF TRANSPORTATION

FOR REFERENCE ONLY

ROUTE 80 BRIDGES OVER ROUTE 287
NORTHBOUND AND SMITH ROAD
CONTRACT NO. 043003714

DEWBERRY-GOODKIND, INC.
COA# 24GA28047600

ANTHONY FULCO, P.E.
NEW JERSEY PROFESSIONAL ENGINEER LICENSE NO. 39939

THIS SHEET AS PREPARED UNDER
RT. 80 MAGIC CONTRACT - 1A

ADVANTAGE ENGINEERING ASSOCIATES, P.C.

MODEL	Layout1
USERNAME	dhaliwah
PLOT DATE	7/30/2010 3:56:12 PM
DWG. NAME	L:\CADD\1126-RT_80_REDECKING\Sheet Files\ITS-08.dgn
PROJECT #	1126-RT_80_REDECKING
PROJECT NAME	ROUTE 80 REDECKING
PLOTDRIVER	\pltcfg\1126-RT_80_Pdf.pltcfg

STATE	FEDERAL PROJECT NO.
NJ	BR-080-5(094)

CABLE # 'D' 48 FIBER ORANGE STRIPE
SPLICE DESIG. FIELD TERM.
LOCATION 287S M.P. 44.5
S3D1FT1

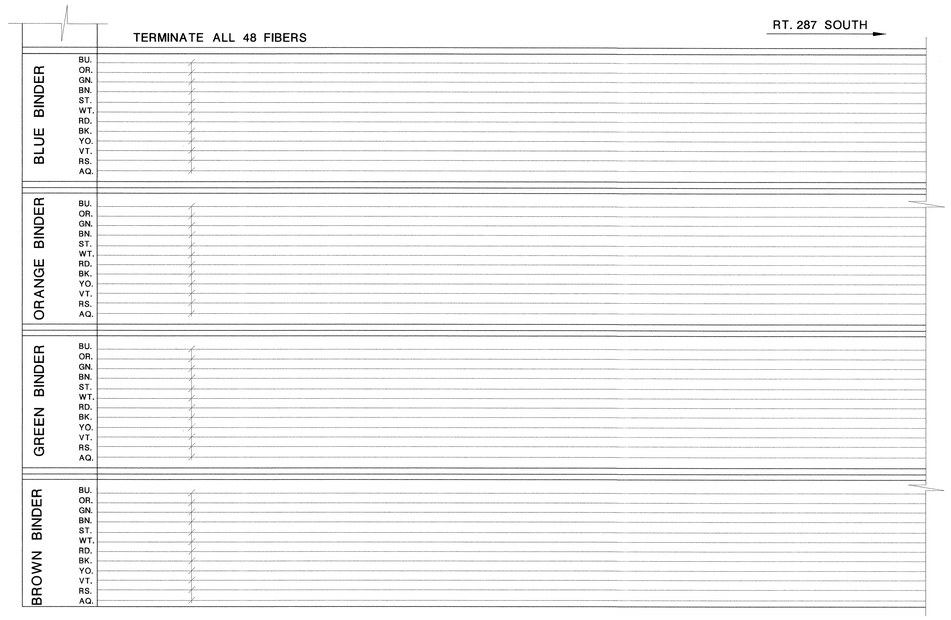

287S M.P. 44.5 C-128

SPLICE TYPE 'C'

18 FIBERS TYPE 'L' CABLE WHITE STRIPE
TO 8 FIBERS TYPE 'B' CABLE RED STRIPE

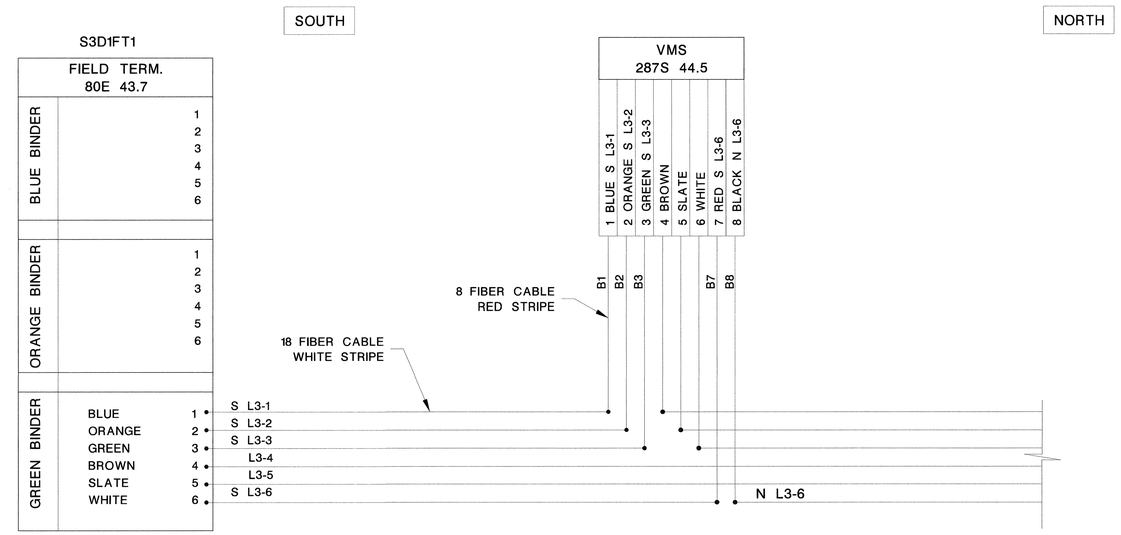

CABLE # 'S'
SPLICE DESIG. FIELD TERM.
DWG. REF. 364
LOCATION 80E M.P. 43.7
S3D1FT1

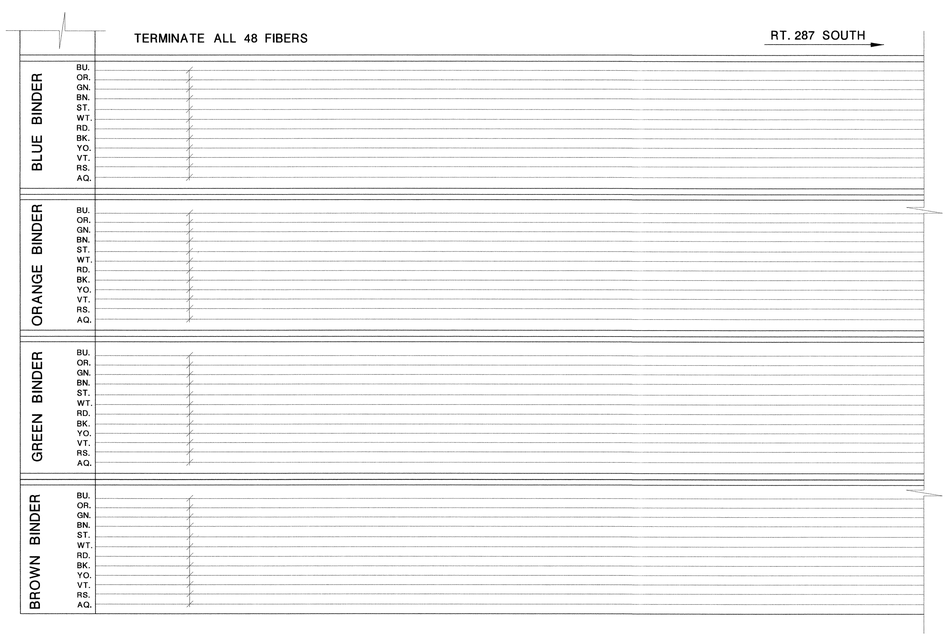

80W M.P. 43.0 C-5

SPLICE TYPE 'C'

18 FIBERS TYPE 'L' CABLE WHITE STRIPE
TO 8 FIBERS TYPE 'B' CABLE RED STRIPE

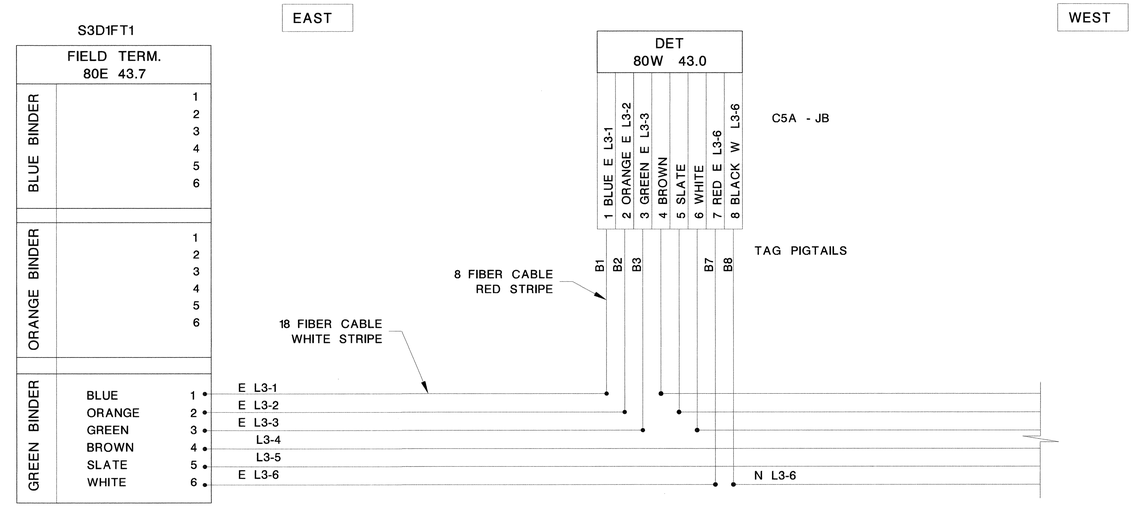

ITS-9 / ITS-10

ITS FACILITIES DESIGNED BY
ADVANTAGE ENGINEERING ASSOCIATES, P.C.
WILLIAM C. DUCSAK
NEW JERSEY PROFESSIONAL ENGINEER LIC. NO. 24GE03614400

NEW JERSEY DEPARTMENT OF TRANSPORTATION

FOR REFERENCE ONLY

ROUTE 80 BRIDGES OVER ROUTE 287
NORTHBOUND AND SMITH ROAD
CONTRACT NO. 043003714

DEWBERRY-GOODKIND, INC.
COA# 24GA28047600

8/24/10
ANTHONY FULCO, P.E.
NEW JERSEY PROFESSIONAL ENGINEER LICENSE NO. 39939

THIS SHEET AS PREPARED UNDER
RT. 80 MAGIC CONTRACT - 1A

ADVANTAGE ENGINEERING ASSOCIATES, P.C.

MODEL	cpyout1	PROJECT #	1126-RT. 80 REDECKING
USERNAME	dholwah	PROJECT NAME	ROUTE 80 REDECKING
PLOT DATE	7/30/2010 3:56:15 PM	PLOTDRIVER	...\pltcfg\1126-RT_80_Pdf.pltcfg
DWG. NAME	...\CADD\1126-RT_80_REDECKING\Sheet Files\ITS-09.dgn		

STATE	FEDERAL PROJECT NO.
NJ	BR-080-5(094)

CABLE # 'S'
SPLICE DESIG. FIELD TERM.
DWG. REF. 364

LOCATION 287S M.P. 44.5
S3D1FT1

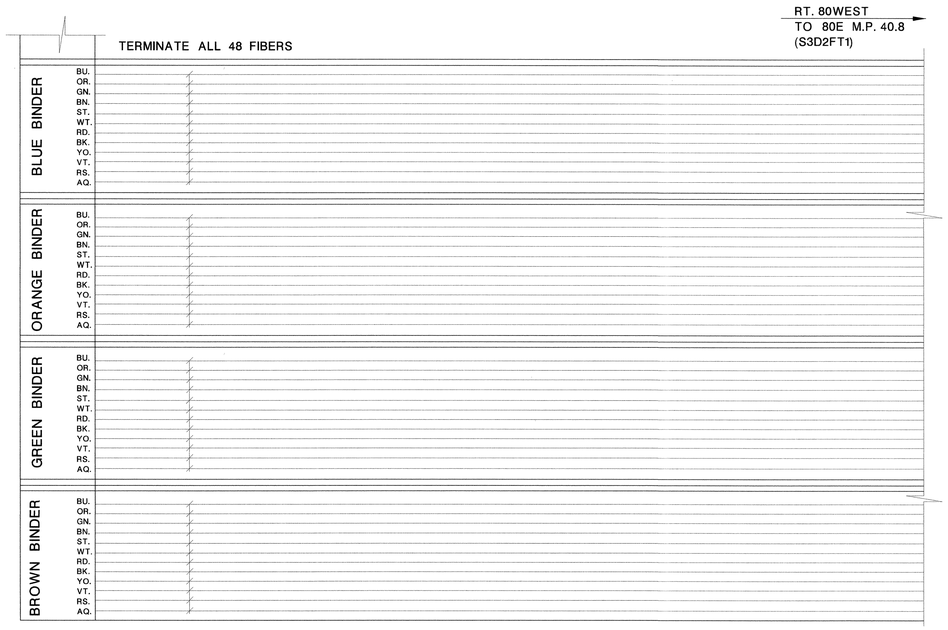

80E M.P. 42.4 C-4

SPLICE TYPE 'F'

48 FIBERS TYPE 'D' CABLE ORANGE STRIPE
TO 8 FIBERS TYPE 'B' CABLE RED STRIPE

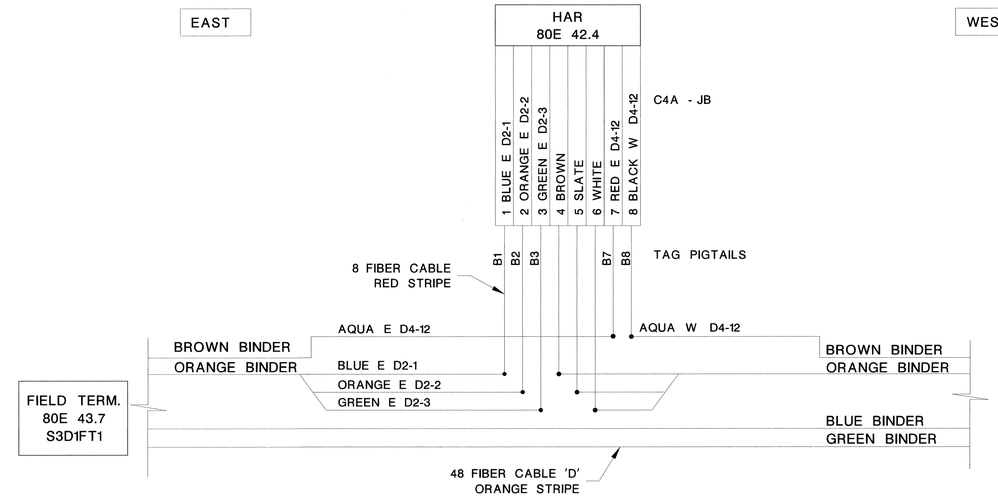

287N M.P. 42.1 C-7

SPLICE TYPE 'D'

48 FIBERS TYPE 'D' CABLE ORANGE STRIPE
TO 8 FIBERS TYPE 'B' CABLE RED STRIPE

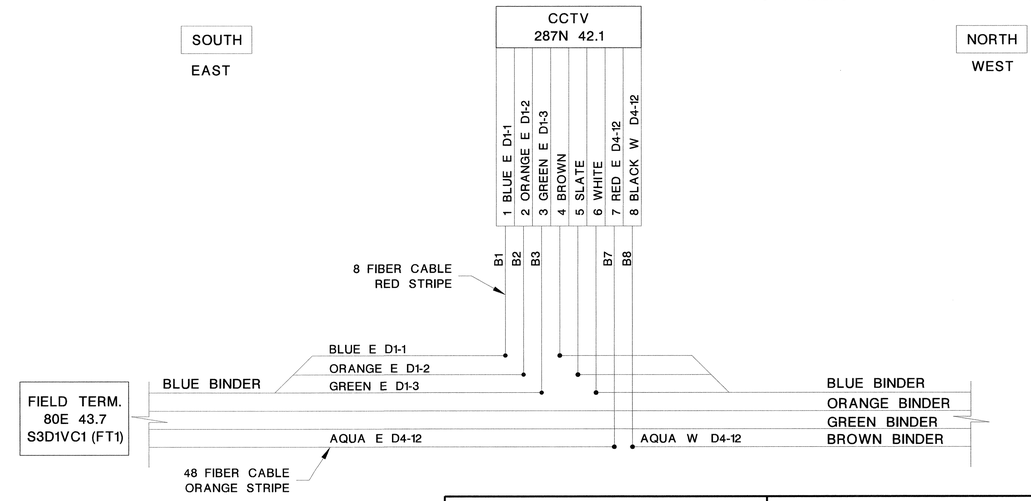

ITS-10
ITS-10

ITS FACILITIES DESIGNED BY
ADVANTAGE ENGINEERING ASSOCIATES, P.C.
WILLIAM C. DUCSAK
NEW JERSEY PROFESSIONAL ENGINEER LIC. NO. 24GE03614400

NEW JERSEY DEPARTMENT OF TRANSPORTATION

FOR REFERENCE ONLY

ROUTE 80 BRIDGES OVER ROUTE 287
NORTHBOUND AND SMITH ROAD
CONTRACT NO. 043003714

DEWBERRY-GOODKIND, INC.
COA# 24GA28047600

ANTHONY FULCO, P.E.
NEW JERSEY PROFESSIONAL ENGINEER LICENSE NO. 39939

THIS SHEET AS PREPARED UNDER
RT. 80 MAGIC CONTRACT - 1A

ADVANTAGE ENGINEERING ASSOCIATES, P.C.

MODEL	layout1	PROJECT #	1126-RT_80_REDECKING
USERNAME	dhaliwalh	PROJECT NAME	ROUTE_80_REDECKING
PLOT DATE	7/30/2010 3:56:18 PM	PLOTDRIVER	\plotcfg\1126-RT_80_Pdf.pltcfg
DWG. NAME	I:\CADD\1126-RT_80_REDECKING\Sheet Files\ITS-10.dgn		

STATE	FEDERAL PROJECT NO.
N.J.	BR-080-5(094)

TOWNSHIP OF PARSIPPANY - TROY HILLS 1"=30' 30 0 30 60 COUNTY OF MORRIS

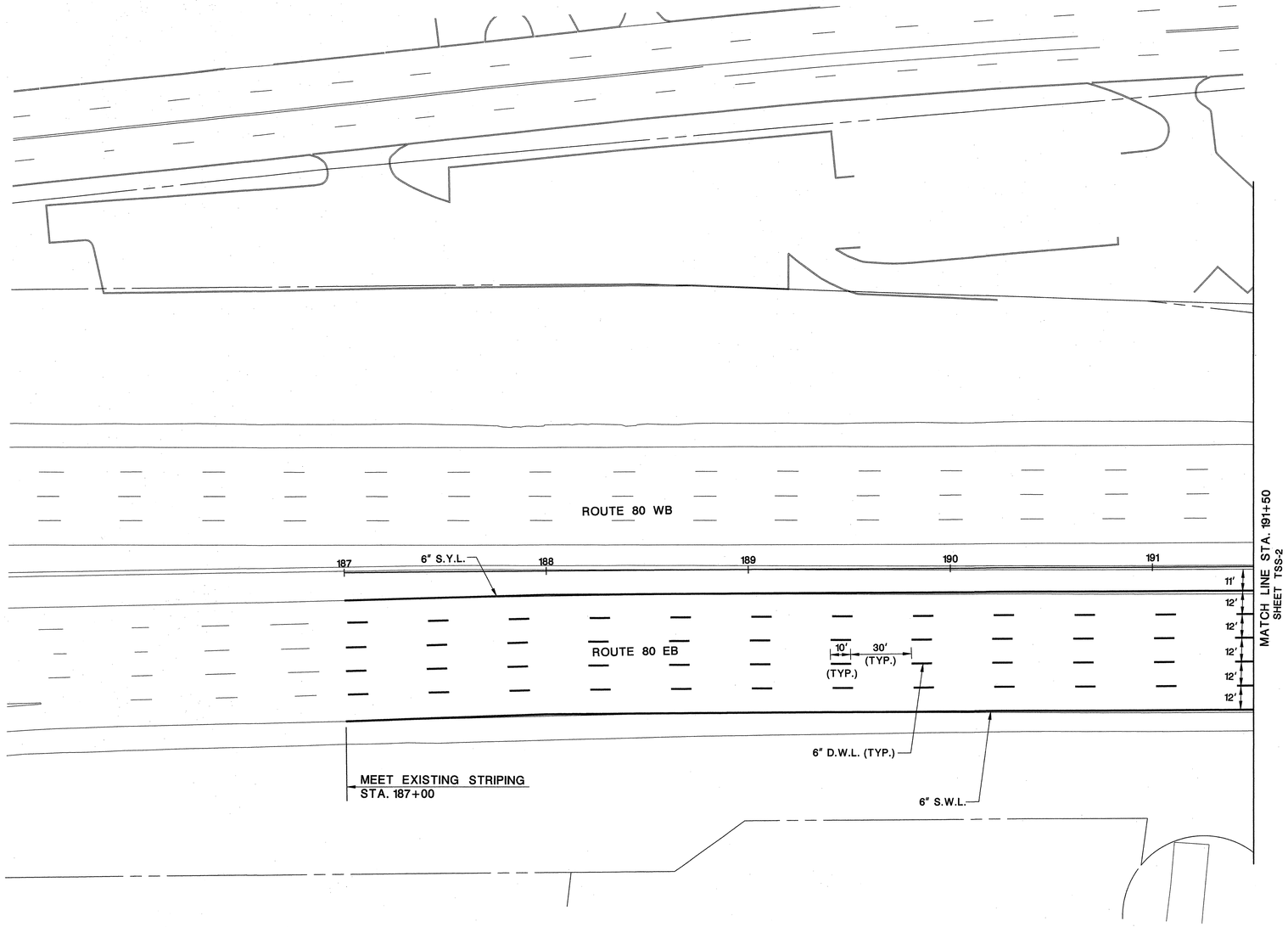

LEGEND:

S.W.L. - SOLID WHITE LINE
D.W.L. - DASHED WHITE LINE
S.Y.L. - SOLID YELLOW LINE

TSS-1 / TSS-9

NEW JERSEY DEPARTMENT OF TRANSPORTATION

TRAFFIC SIGNING AND STRIPING PLANS

ROUTE 80 BRIDGES OVER ROUTE 287
NORTHBOUND AND SMITH ROAD
CONTRACT NO. 043003714

DEWBERRY-GOODKIND, INC.
CERTIFICATE OF AUTHORIZATION NO. 24GA28047600
8/24/10
ANTHONY FULCO, P.E.
NJ PROFESSIONAL ENGINEER LICENSE NO. 24GE03993900

59
129

Dewberry-Goodkind, Inc.
Bloomfield, N.J.

apisani 8/24/2010 9:00:17 AM OceTDS700-BW.plt 30-scale 3056-REDECKING-Route80-287-V8 Q:\3056\Redecking\CAD\Civil\PLANS\ACSS305601.dgn

STATE	FEDERAL PROJECT NO.
N.J.	BR-080-5(094)

TOWNSHIP OF PARSIPPANY - TROY HILLS

1"=30'

30 0 30 60

COUNTY OF MORRIS

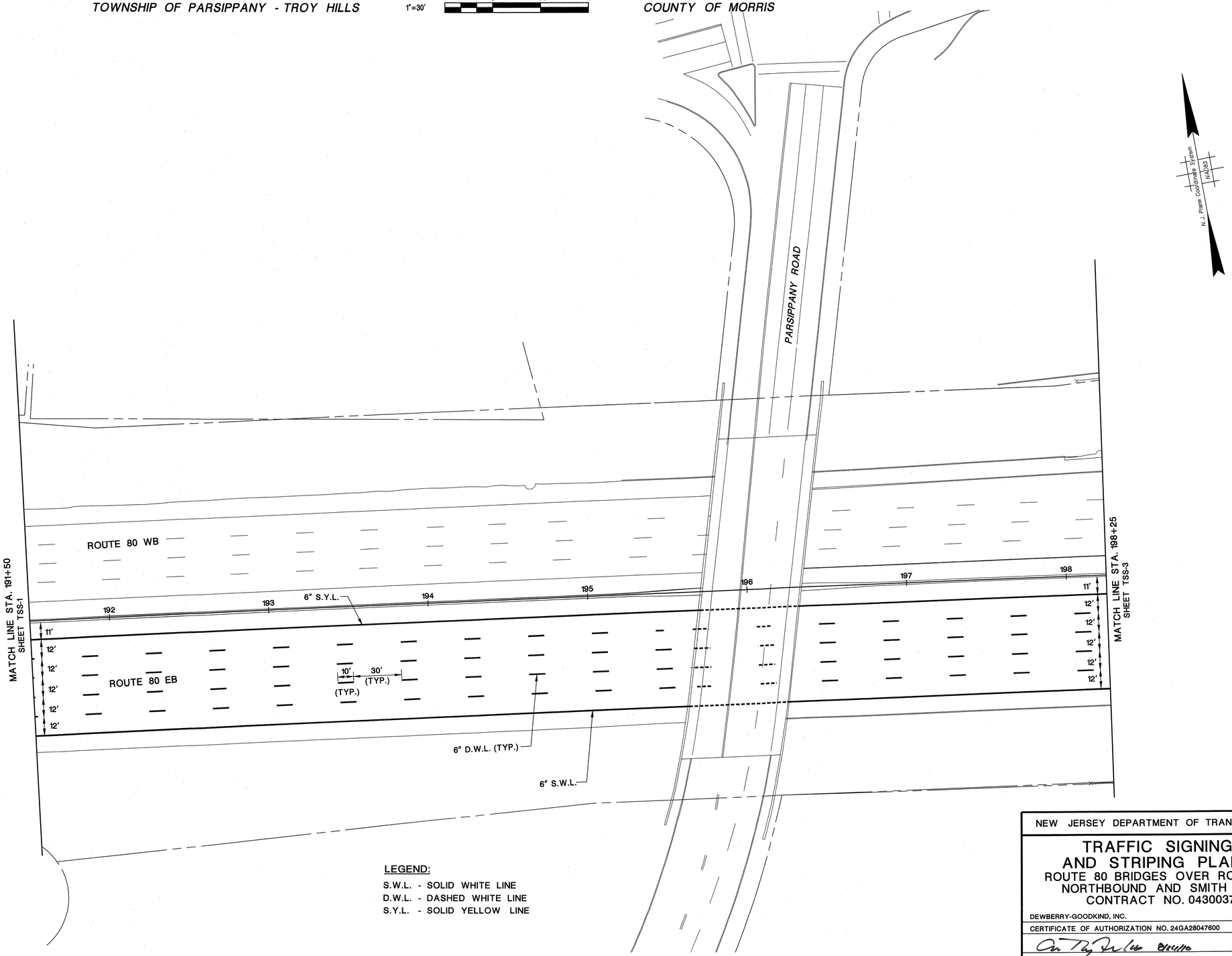

LEGEND:

S.W.L. - SOLID WHITE LINE
D.W.L. - DASHED WHITE LINE
S.Y.L. - SOLID YELLOW LINE

TSS-2
TSS-9

NEW JERSEY DEPARTMENT OF TRANSPORTATION

TRAFFIC SIGNING AND STRIPING PLANS

ROUTE 80 BRIDGES OVER ROUTE 287
NORTHBOUND AND SMITH ROAD
CONTRACT NO. 043003714

DEWBERRY-GOODKIND, INC.

CERTIFICATE OF AUTHORIZATION NO. 24GA28047600

ANTHONY FULCO, P.E.

NJ PROFESSIONAL ENGINEER LICENSE NO. 24GE03993900

Dewberry-Goodkind, Inc.
Bloomfield, N.J.

STATE	FEDERAL PROJECT NO.
N.J.	BR-080-5(094)

TOWNSHIP OF PARSIPPANY - TROY HILLS

1"=30'

30 0 30 60

COUNTY OF MORRIS

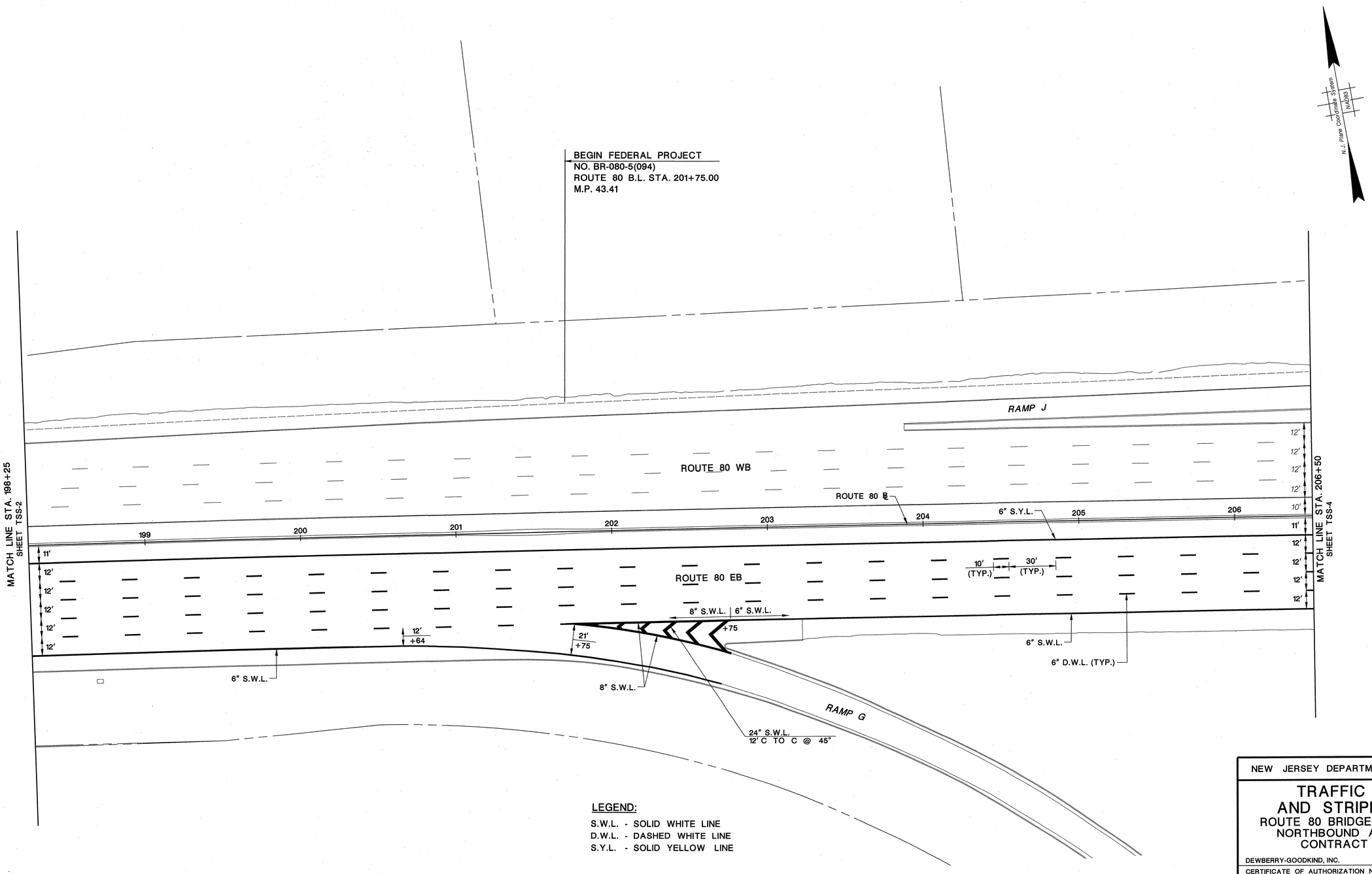

LEGEND:

S.W.L. - SOLID WHITE LINE
D.W.L. - DASHED WHITE LINE
S.Y.L. - SOLID YELLOW LINE

TSS-3
TSS-9

NEW JERSEY DEPARTMENT OF TRANSPORTATION

TRAFFIC SIGNING AND STRIPING PLANS

ROUTE 80 BRIDGES OVER ROUTE 287
NORTHBOUND AND SMITH ROAD
CONTRACT NO. 043003714

DEWBERRY-GOODKIND, INC.
CERTIFICATE OF AUTHORIZATION NO. 24GA28047600

Anthony Fulco 8/24/10

ANTHONY FULCO, P.E.
NJ PROFESSIONAL ENGINEER LICENSE NO. 24GE03993900

Dewberry-Goodkind, Inc.
Bloomfield, N.J.

STATE	FEDERAL PROJECT NO.
N.J.	BR-080-5(094)

TOWNSHIP OF PARSIPPANY - TROY HILLS

1"=30' 30 0 30 60

COUNTY OF MORRIS

SIGN TABLE

SIGN DESIGNATION	MESSAGE	SIZE IN x IN	AREA S.F.	REQUIRED QUANTITY IN NUMBER	TOTAL AREA IN S.F.
R3-3	NO TURNS	48" X 48"	16.0	2	32.0
W4-1	MERGE	48" X 48"	16.0	2	32.0
				TOTAL	64.0

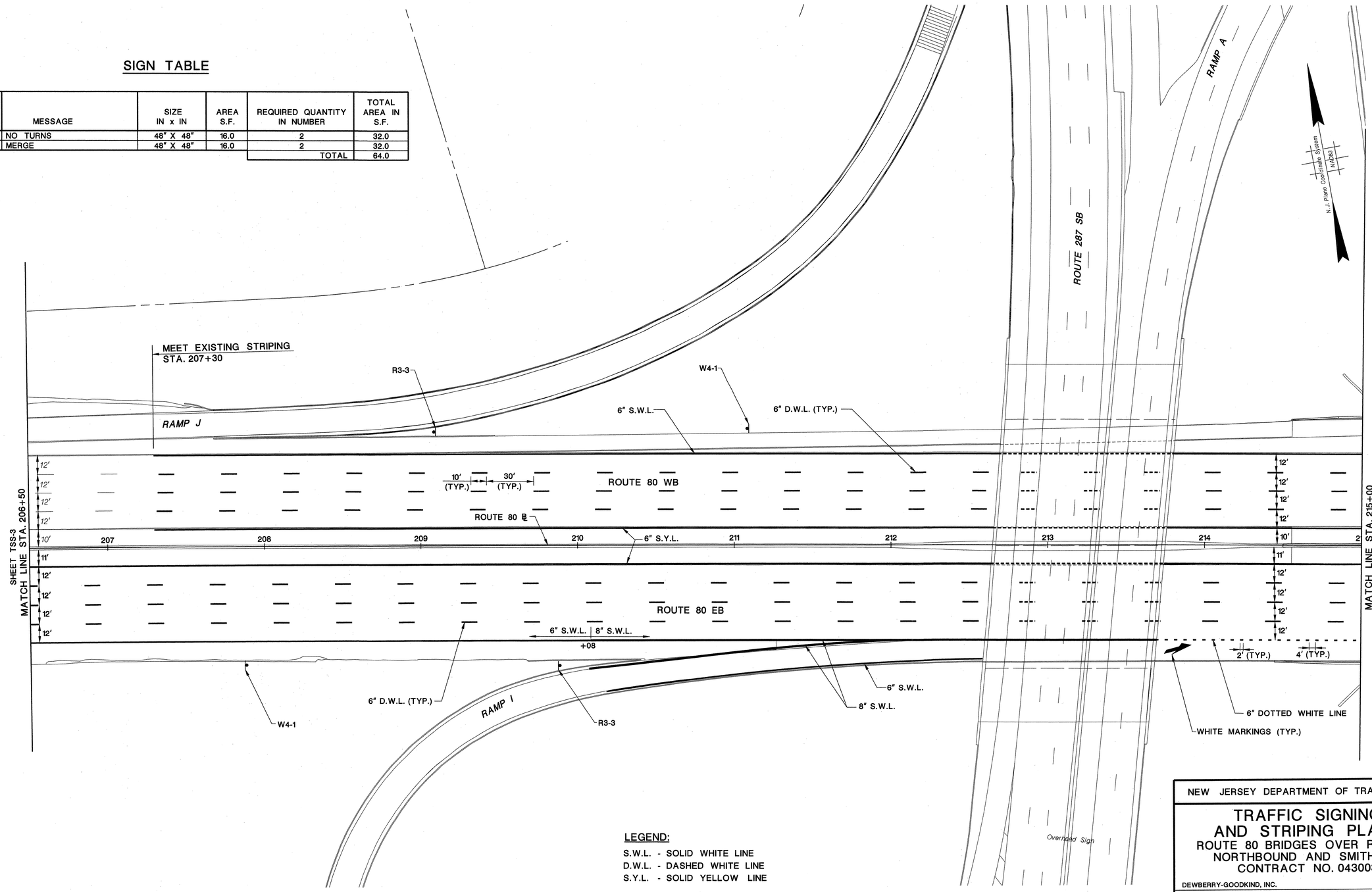

LEGEND:

S.W.L. - SOLID WHITE LINE
D.W.L. - DASHED WHITE LINE
S.Y.L. - SOLID YELLOW LINE

TSS-4 / TSS-9

NEW JERSEY DEPARTMENT OF TRANSPORTATION

TRAFFIC SIGNING AND STRIPING PLANS

ROUTE 80 BRIDGES OVER ROUTE 287 NORTHBOUND AND SMITH ROAD

CONTRACT NO. 043003714

DEWBERRY-GOODKIND, INC.

CERTIFICATE OF AUTHORIZATION NO. 24GA28047600

8/24/10

ANTHONY FULCO, P.E.

NJ PROFESSIONAL ENGINEER LICENSE NO. 24GE03993900

Dewberry-Goodkind, Inc.
Bloomfield, N.J.

apisani 8/24/2010 9:00:38 AM OceTDS700-BW.plt 30-scale 3056-REDECKING-Route80-287-V8 Q:\3056\Redecking\CAD\Civil\PLANS\ACSS305604.dgn

STATE	FEDERAL PROJECT NO.
N.J.	BR-080-5(094)

TOWNSHIP OF PARSIPPANY - TROY HILLS

1"=30' 30 0 30 60

COUNTY OF MORRIS

SIGN TABLE

SIGN DESIGNATION	MESSAGE	SIZE IN x IN	AREA S.F.	REQUIRED QUANTITY IN NUMBER	TOTAL AREA IN S.F.
R3-3	NO TURNS	48" X 48"	16.0	1	16.0
W4-3	ADDED LANE	48" X 48"	16.0	1	16.0
W(NJ)9-3	RIGHT LANE FOR EXIT ONLY	84" X 42"	24.5	1	24.5
				TOTAL	56.5

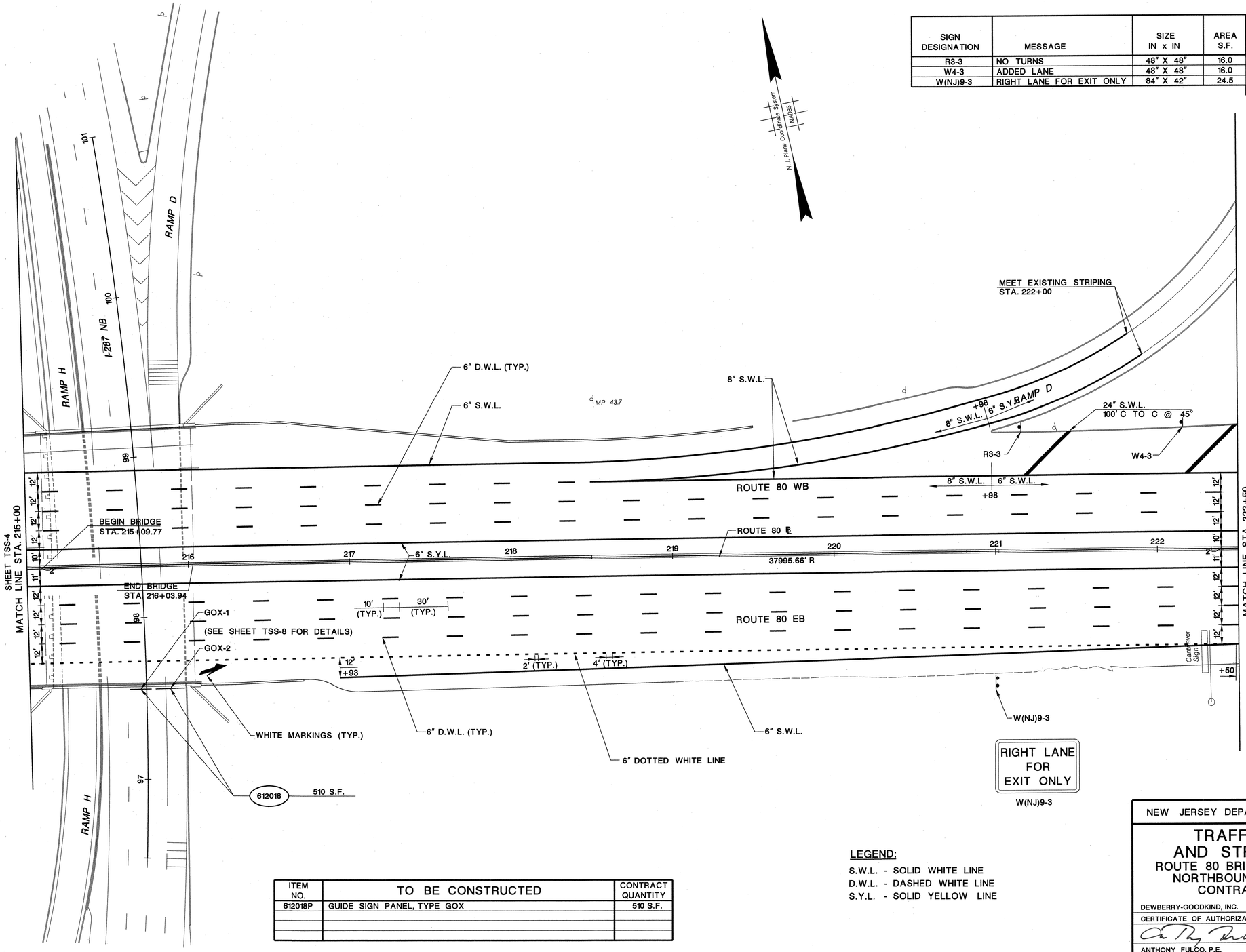

ITEM NO.	TO BE CONSTRUCTED	CONTRACT QUANTITY
612018P	GUIDE SIGN PANEL, TYPE GOX	510 S.F.

LEGEND:

S.W.L. - SOLID WHITE LINE
D.W.L. - DASHED WHITE LINE
S.Y.L. - SOLID YELLOW LINE

TSS-5
TSS-9

NEW JERSEY DEPARTMENT OF TRANSPORTATION

TRAFFIC SIGNING AND STRIPING PLANS

ROUTE 80 BRIDGES OVER ROUTE 287
NORTHBOUND AND SMITH ROAD
CONTRACT NO. 043003714

DEWBERRY-GOODKIND, INC.
CERTIFICATE OF AUTHORIZATION NO. 24GA28047600
8/24/10
ANTHONY FULCO, P.E.
NJ PROFESSIONAL ENGINEER LICENSE NO. 24GE03993900

63
129

Dewberry-Goodkind, Inc.
Bloomfield, N.J.

apisani 8/24/2010 9:00:46 AM OceTDS700-BW.plt 30-scale 3056-REDECKING-Route80-287-V8 Q:\3056\Redecking\CAD\Civil\PLANS\ACSS305605.dgn

STATE	FEDERAL PROJECT NO.
N.J.	BR-080-5(094)

TOWNSHIP OF PARSIPPANY - TROY HILLS

1"=30'

30 0 30 60

COUNTY OF MORRIS

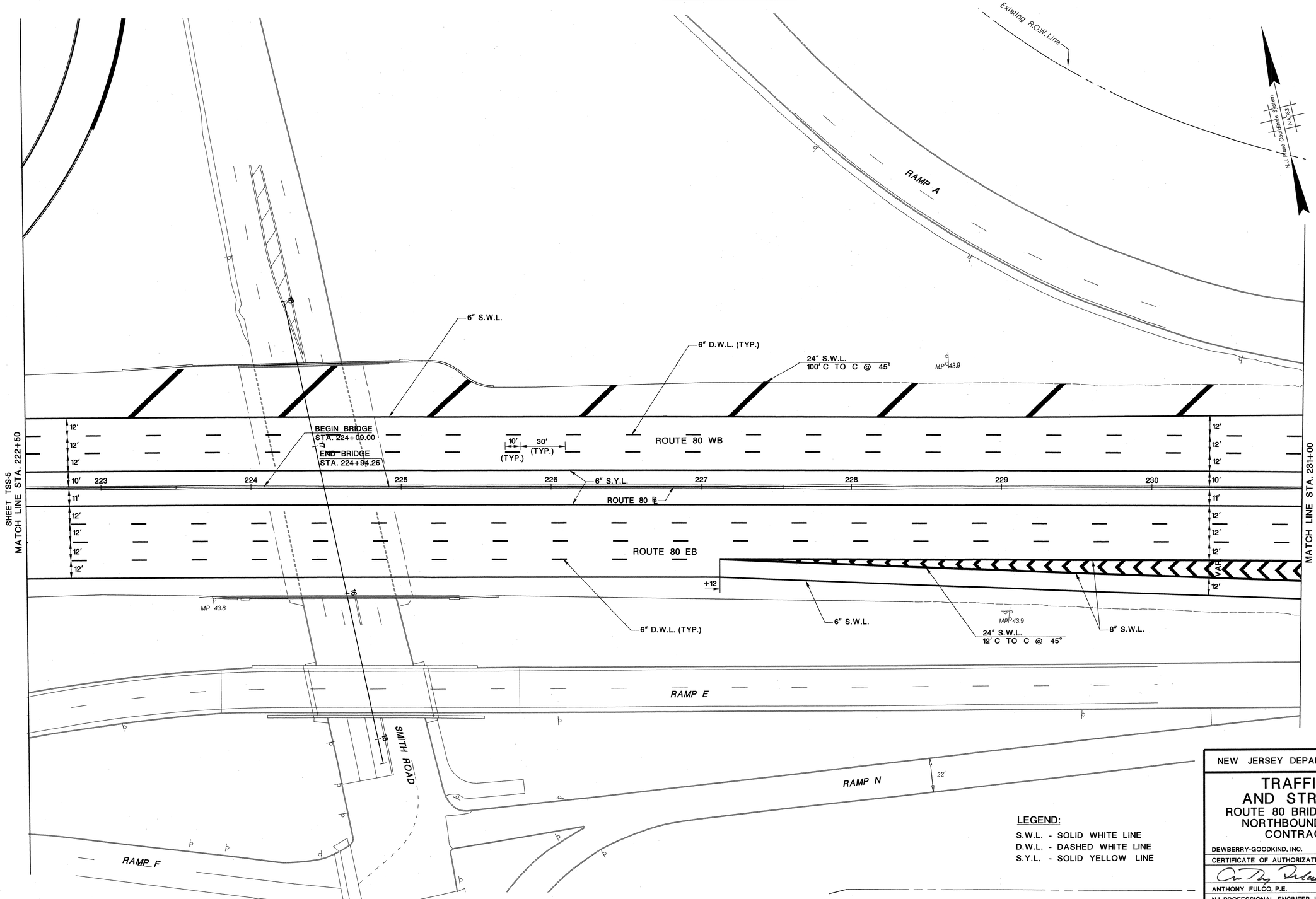

LEGEND:

S.W.L. - SOLID WHITE LINE
D.W.L. - DASHED WHITE LINE
S.Y.L. - SOLID YELLOW LINE

TSS-6
TSS-9

NEW JERSEY DEPARTMENT OF TRANSPORTATION

TRAFFIC SIGNING AND STRIPING PLANS

ROUTE 80 BRIDGES OVER ROUTE 287
NORTHBOUND AND SMITH ROAD
CONTRACT NO. 043003714

DEWBERRY-GOODKIND, INC.
CERTIFICATE OF AUTHORIZATION NO. 24GA28047600
8/24/10
ANTHONY FULCO, P.E.
NJ PROFESSIONAL ENGINEER LICENSE NO. 24GE03993900

Dewberry-Goodkind, Inc.
Bloomfield, N.J.

apisani 8/24/2010 9:00:53 AM OceTDS700-BW.plt 30-scale 3056-REDECKING-Route80-287-V8 Q:\3056\Redecking\CAD\Civil\PLANS\ACSS305606.dgn

STATE	FEDERAL PROJECT NO.
N.J.	BR-080-5(094)

TOWNSHIP OF PARSIPPANY - TROY HILLS

1"=30'

30 0 30 60

COUNTY OF MORRIS

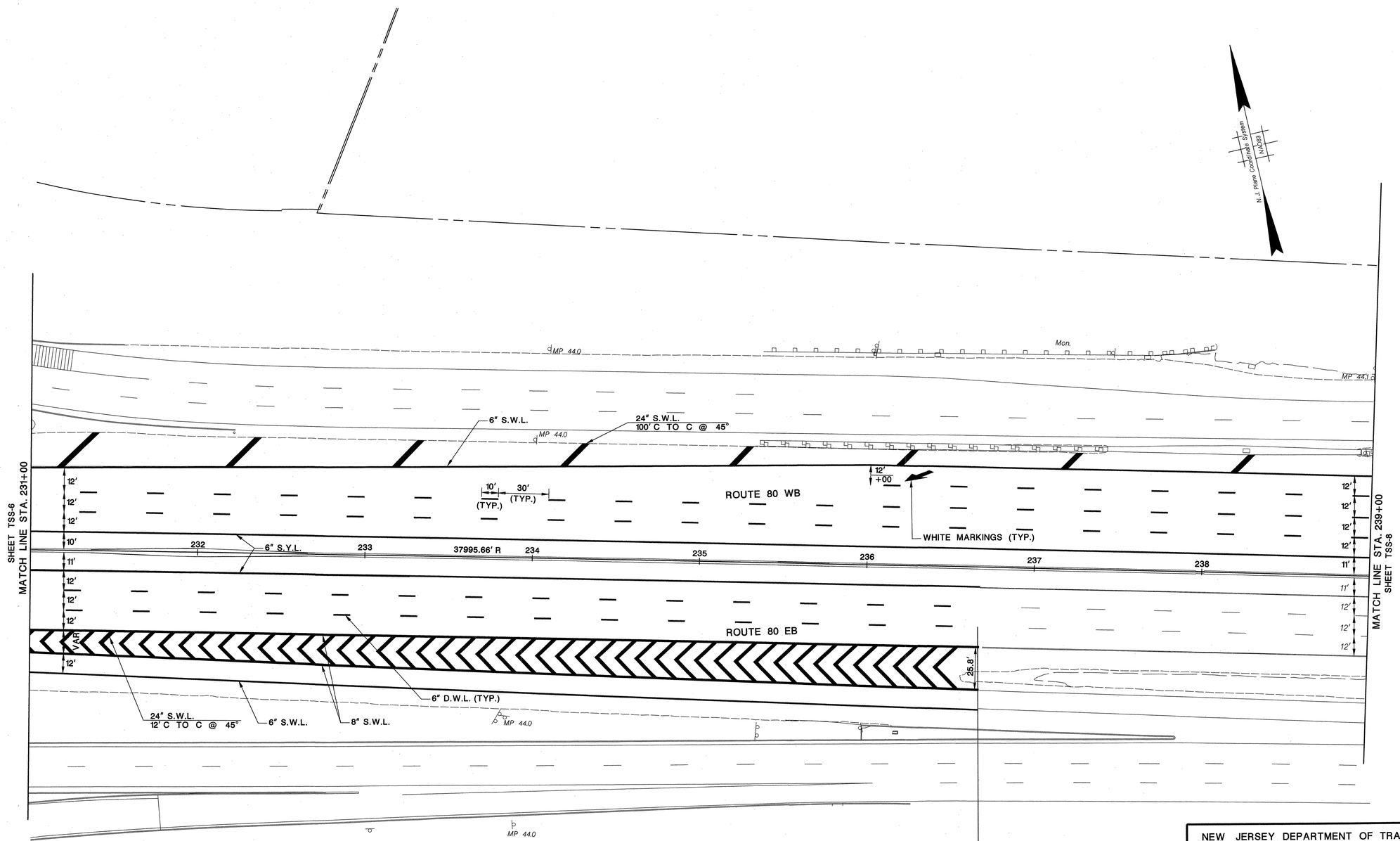

LEGEND:

S.W.L. - SOLID WHITE LINE
D.W.L. - DASHED WHITE LINE
S.Y.L. - SOLID YELLOW LINE

MEET EXISTING STRIPING

END FEDERAL PROJECT
NO. BR-080-5(094)
ROUTE 80 B.L. STA. 236+68.00
M.P. 44.07

TSS-7 / TSS-9

NEW JERSEY DEPARTMENT OF TRANSPORTATION

TRAFFIC SIGNING AND STRIPING PLANS

ROUTE 80 BRIDGES OVER ROUTE 287
NORTHBOUND AND SMITH ROAD
CONTRACT NO. 043003714

DEWBERRY-GOODKIND, INC.
CERTIFICATE OF AUTHORIZATION NO. 24GA28047600

ANTHONY FULCO, P.E.
NJ PROFESSIONAL ENGINEER LICENSE NO. 24GE03993900

Dewberry-Goodkind, Inc.
Bloomfield, N.J.

STATE	FEDERAL PROJECT NO.
N.J.	BR-080-5(094)

TOWNSHIP OF PARSIPPANY - TROY HILLS

1"=30'

30 0 30 60

COUNTY OF MORRIS

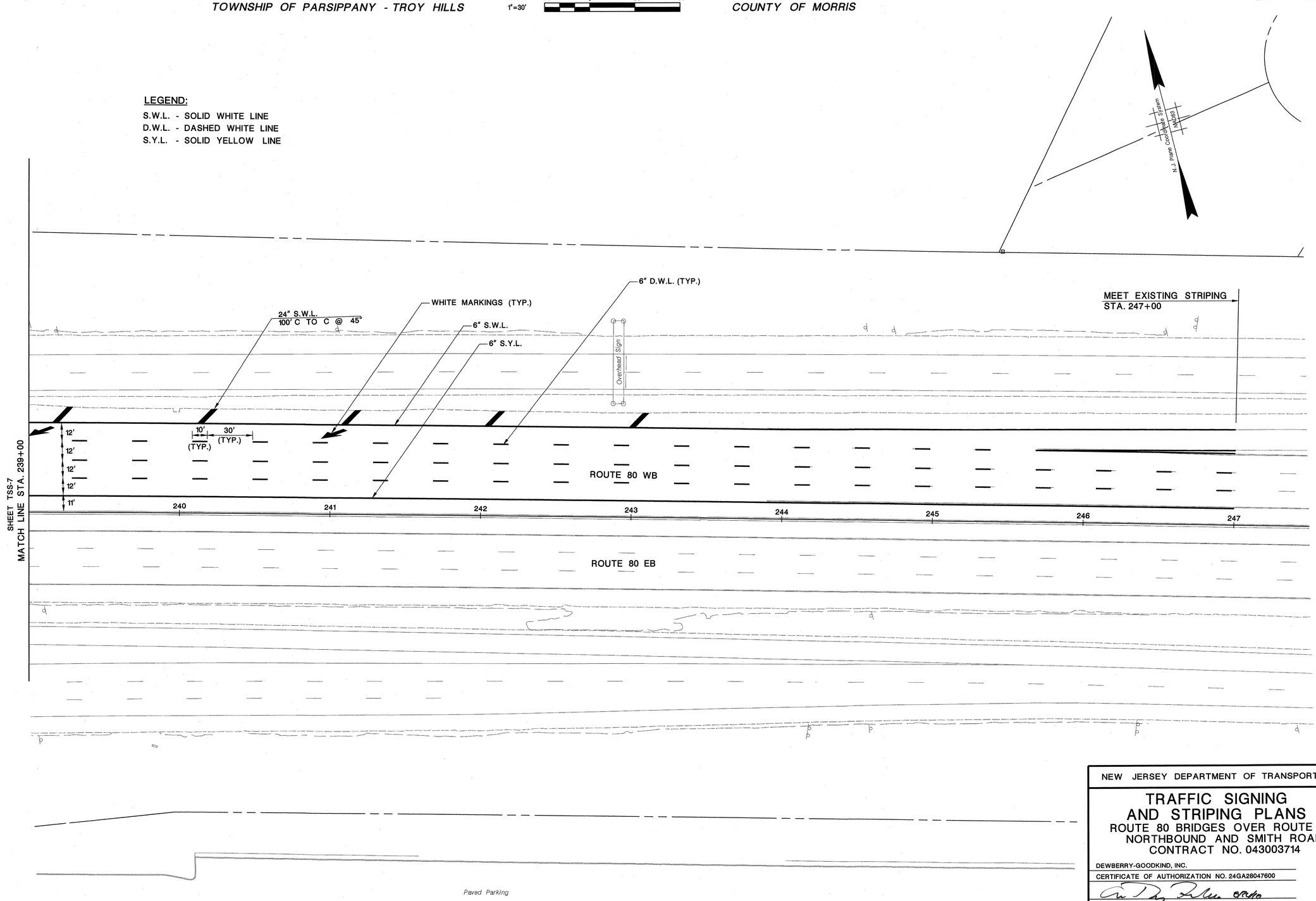

TSS-8
TSS-9

NEW JERSEY DEPARTMENT OF TRANSPORTATION

TRAFFIC SIGNING AND STRIPING PLANS

ROUTE 80 BRIDGES OVER ROUTE 287 NORTHBOUND AND SMITH ROAD

CONTRACT NO. 043003714

DEWBERRY-GOODKIND, INC.

CERTIFICATE OF AUTHORIZATION NO. 24GA28047600

ANTHONY FULCO, P.E.

NJ PROFESSIONAL ENGINEER LICENSE NO. 24GE03993900

Dewberry-Goodkind, Inc.
Bloomfield, N.J.

apisani 8/24/2010 9:01:04 AM OceTDS700-BW.plt 30-scale 3056-REDECKING-Route80-287-V8 Q:\3056\Redecking\CAD\Civil\PLANS\ACSS305608.dgn

STATE	FEDERAL PROJECT NO.
N.J.	BR-080-5(094)

TOWNSHIP OF PARSIPPANY - TROY HILLS 1"=30' 30 0 30 60 COUNTY OF MORRIS

IDENT. NO.	STATION	TEXT	COLOR BACK-GROUND	COLOR LEGEND	U.C.	L.C.	CAPS	NO. SIZE	SHIELD SIZE	ARROW SIZE	VERTICAL SPACE IN INCHES	SIZE (INCLUDES BORDER)	POST SUPPORTS NO.	POST SUPPORTS MATL	POST SUPPORTS SIZE	COMMENTS
GOX-1	ROUTE 287 NB ℄ STA. 97+60 (BRIDGE MOUNT)	287 NORTH Mahwah	GREEN	WHITE	16"	12"	15"/12"		45"X36"	32"X22"	13.3" 36" 11.3" 16" 12" 22" 9.4"	28'X10'				SEE NOTES 1,2,3,4&5 TOTAL AREA: 280 S.F.
GOX-2	ROUTE 287 NB ℄ STA. 97+60 (BRIDGE MOUNT)	EXIT 41B 80 WEST Del Water Gap EXIT ↗ ONLY RAMP SPEED 20 MPH BLACK ON YELLOW 53"X20" BLACK ON YELLOW 63"X20"	GREEN	WHITE			10"	15"			5.5" 15" 3.5"	11'X2'				SEE NOTES 1,2,3,4&5 TOTAL AREA: 230 S.F.
			GREEN	WHITE	16"	12"	15"/12" 12"		36"X36"	28"X28" @45°	12" 36" 8.8" 16" 13.3" 28" 12"	16'X10.5'				
			YELLOW	BLACK			10"				10" 10" 10"	16'X2.5'				

NOTES:

1. GUIDE SIGNS ON OVERHEADS AND BREAKAWAY OR NON-BREAKAWAY POSTS SHALL BE FABRICATED OF EXTRUDED ALUMINUM PANELS COVERED WITH ASTM D 4956 TYPES VIII OR IX RETROREFLECTIVE SHEETING. GO SIGN LETTERS, DIGITS, ARROWS, LEGENDS, BORDERS, AND ACCESSORIES SHALL BE TYPE A DEMOUNTABLE.
2. ALL UNITS ARE IN INCHES UNLESS OTHERWISE NOTED.
3. ALL GO SIGN TEXT SHALL BE SERIES "E" MODIFIED (EM) UNLESS OTHERWISE NOTED.
4. THE FIRST LETTER OF ALL CARDINAL DIRECTION WORDS SHALL BE TEN PERCENT LARGER, ROUNDED UP TO THE NEAREST WHOLE NUMBER.
5. ALL GO SIGNS SHALL HAVE TWO (2) INCH BORDERS UNLESS OTHERWISE NOTED.

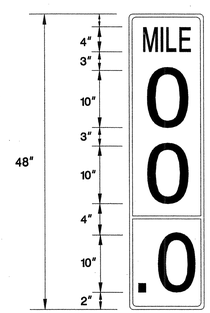

D10-2, D10-2A

* REPLACE ALL MISSING OR DAMAGED MILE MARKERS WITHIN PROJECT LIMITS

TSS-9 / TSS-9

NEW JERSEY DEPARTMENT OF TRANSPORTATION

TRAFFIC SIGNING AND STRIPING PLANS

ROUTE 80 BRIDGES OVER ROUTE 287 NORTHBOUND AND SMITH ROAD

CONTRACT NO. 043003714

DEWBERRY-GOODKIND, INC.

CERTIFICATE OF AUTHORIZATION NO. 24GA28047600

8/24/10

ANTHONY FULCO, P.E.

NJ PROFESSIONAL ENGINEER LICENSE NO. 24GE03993900

Dewberry-Goodkind, Inc.
Bloomfield, N.J.

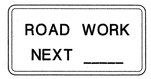

G20 - 1 [60" x 24"]
(10 S.F.)

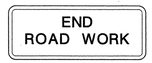

G20 - 2A [48" x 24"]
(8 S.F.)

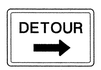

M4 - 9L (LEFT) [30" x 24"]
M4 - 9R (RIGHT) [30" x 24"]
(5 S.F.)

M4 - 9 (L or R) (S) [48" x 36"]
(12 S.F.)

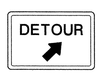

M4 - 9LX (LEFT) [30" x 24"]
M4 - 9RX (RIGHT) [30" x 24"]
(5 S.F.)

M4 - 9 (L or R) XS [48" x 36"]
(12 S.F.)

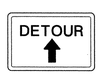

M4 - 9X [30" x 24"]
(5 S.F.)

M4 - 9X (S) [48" x 36"]
(12 S.F.)

M4 - 10L (LEFT) [48" x 18"]
M4 - 10R (RIGHT) [48" x 18"]
(6 S.F.)

M4 - 8a [24" x 18"]
(3 S.F.)

M4 - 11 (S) [48" x 36"]
(12 S.F.)

R2 - 1 [36" x 48"]
(12 S.F.)

R2 - 1 (S) [48" x 60"]
(20 S.F.)

R4 - 1 [24" x 30"]
(5 S.F.)

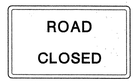

R11 - 2 [48" x 30"]
(10 S.F.)

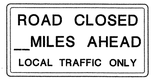

R11 - 3 [60" x 30"]
(12.5 S.F.)

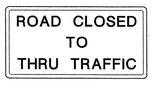

R11 - 4 [60" x 30"]
(12.5 S.F.)

(L OR R)

W1 - 4a [48" x 48"]
(16 S.F.)

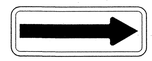

(L OR R)

W1- 6 [48" x 24"]
(8 S.F.)

W1 - 6 (S) [60" x 30"]
(12.5 S.F.)

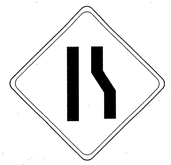

(L OR R)

W4 - 2 (S) [48" x 48"]
(16 S.F.)

W5 - 1 (S) [48" x 48"]
(16 S.F.)

W6 - 3 [48" x 48"]
(16 S.F.)

W20 - 7b [48" x 48"]
(16 S.F.)

W13 - 1 [18" x 18"]
(2.3 S.F.)

W13 - 1 (S) [24" x 24"]
(4 S.F.)

W20 - 1A [48" x 48"]
(16 S.F.)

W20 - 2 [48" x 48"]
(16 S.F.)

W20 - 3 [48" x 48"]
(16 S.F.)

W20 - 4 [48" x 48"]
(16 S.F.)

(L OR R) (CENTER)
W20 - 5 [48" x 48"]
(16 S.F.)

W20 - 7a [48" x 48"]
(16 S.F.)

W21 - 5 (S) [48" x 48"]
(16 S.F.)

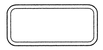

M4 - 9N [30" x 12" MIN.]
(2.5 S.F.)

(SIZE WILL VARY WITH LENGTH OF STREET NAME)

STREET NAME SIGN TO BE USED IN CONJUNCTION WITH M4 - 9 SIGNS BLACK ON ORANGE

[24" x 24"]
(4 S.F.)

[30" x 30"] (S)
(6.3 S.F.)

[24" x 24"]
(4 S.F.)

[30" x 30"] (S)
(6.3 S.F.)

W8 - 1 (S) [48" x 48"]
(16 S.F.)

W8 - 9a [48" x 48"]
(16 S.F.)

W8 - 14 [48" x 48"]
(16 S.F.)

W8 - 14A [48" x 48"]
(16 S.F.)

W99 - 2 [48" x 48"]
(16 S.F.)

NOTE:

THE BORDER, THE WORDS "GIVE US A", "SLOW DOWN!", AND THE BRAKE PEDAL ARE BLACK; LEAVING THE WORD "BRAKE" ORANGE.

GENERAL NOTES:

1. DIMENSIONS, COLORS AND DETAILS OF VARIOUS SIZE SIGNS, AND ACCESSORY PANELS TO FOLLOW STANDARDS IN THE CURRENT "STANDARD HIGHWAY SIGN PUBLICATION" AND THE CURRENT "MANUAL ON UNIFORM TRAFFIC CONTROL DEVICES FOR STREETS AND HIGHWAYS".
2. (S) REPRESENTS A SPECIAL SIZE SIGN.
3. LETTERS AND NUMERALS SHALL CONFORM TO THE CURRENT MANUAL, "STANDARD ALPHABETS FOR HIGHWAY SIGNS" U.S. DEPARTMENT OF TRANSPORTATION, FEDERAL HIGHWAY ADMINISTRATION.
4. THE CONTRACTOR SHALL OBTAIN THE APPROVAL OF THE ENGINEER FOR THE DISTANCE TO BE USED ON THE ADVANCE WARNING SIGNS, AND FOR THE SPEED LIMIT TO BE USED ON THE R2-1 SIGN.
5. DISTANCE LEGEND: SIGN NUMBER FOLLOWED BY LETTER & DISTANCE

LETTER	DISTANCE
A	1500'
B	1000'
C	500'
D	__MILE
E	__MILES AHEAD
F	AHEAD

BACKING MATERIAL

1. ALUMINUM SHALL BE FLAT SHEET OF ALLOY AND TEMPER 5052-H38 OR 6061-T6 :
   A. 0.10" THICK FOR ALL CONSTRUCTION SIGNS EXCEPT SIGNS SHOWN MOUNTED ON BREAKAWAY BARRICADES.
   B. 0.024" THICK FOR ALL CONSTRUCTION SIGNS SHOWN MOUNTED ON BREAKAWAY BARRICADES.

TEMPORARY SIGN SUPPORTS

1. SIGN SUPPORTS SHALL BE OF WELL SEASONED LUMBER, S4S, FREE OF SPLITS, KNOTS AND WARPS, OR OF STEEL COMPONENTS.
2. WOOD POSTS SHALL HAVE A UNIFORM CROSS-SECTION AND SHALL NOT EXCEED THE FOLLOWING DIMENSIONS FOR:

   SINGLE POST = 4" x 6"
   TWO POSTS = 3" x 6" OR 4" x 5"
   THREE POSTS = 3" x 5" OR 4" x 4"

   4" X 6" WOOD POSTS SHALL BE MODIFIED BY DRILLING 1½ INCH DIAMETER HOLES 4 INCHES AND 18 INCHES ABOVE THE GROUND LINE AND PERPENDICULAR TO THE ROADWAY CENTERLINE.
3. NO BRACING IS PERMITTED. VERTICAL CLEARANCES FOR SIGNS MOUNTED ON WOOD SUPPORTS SHALL BE 7 FOOT MINIMUM. EMBEDMENT DEPTH FOR THE WOOD POST SHALL NOT EXCEED 3.5 FEET.
4. STEEL POSTS SHALL BE IN ACCORDANCE WITH THE STANDARD DETAIL FOR U-POST SIGN SUPPORT.
5. TEMPORARY SIGN SUPPORTS NOT MEETING THIS CRITERIA SHALL BE SHIELDED BY A LONGITUDINAL BARRIER OR CRASH CUSHIONS.

SIGN FACES

1. SIGN FACES SHALL BE ASTM D 4956 TYPE VII OR VIII FLUORESCENT ORANGE SHEETING.

FASTENING

1. ALL SIGNS SHALL BE SECURELY FASTENED TO THEIR SUPPORTS WITH BOLTS, NUTS AND WASHERS IN ACCORDANCE WITH THE SPECIFICATIONS.

CONSTRUCTION SIGNS

N.T.S.

CD-159-6

NEW JERSEY DEPARTMENT OF TRANSPORTATION

CONSTRUCTION DETAILS

CD-159-6.1

BDC08D-01-BACKING MATERIAL
BDC07D-01-ORIGINAL SHEET
pen table=
scale=
date=
ID=

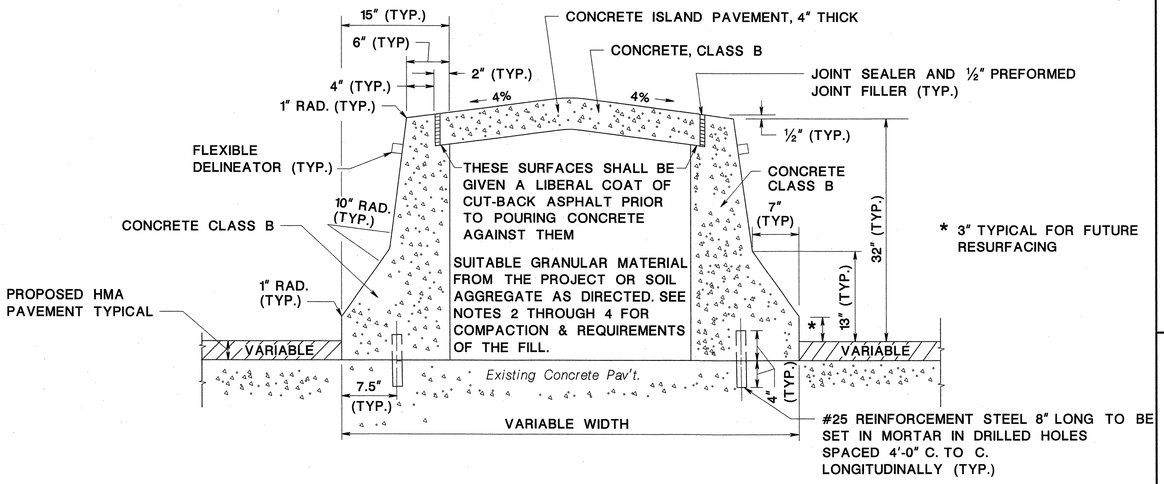

15" x VARIABLE HEIGHT CONCRETE BARRIER CURB, DOWELLED

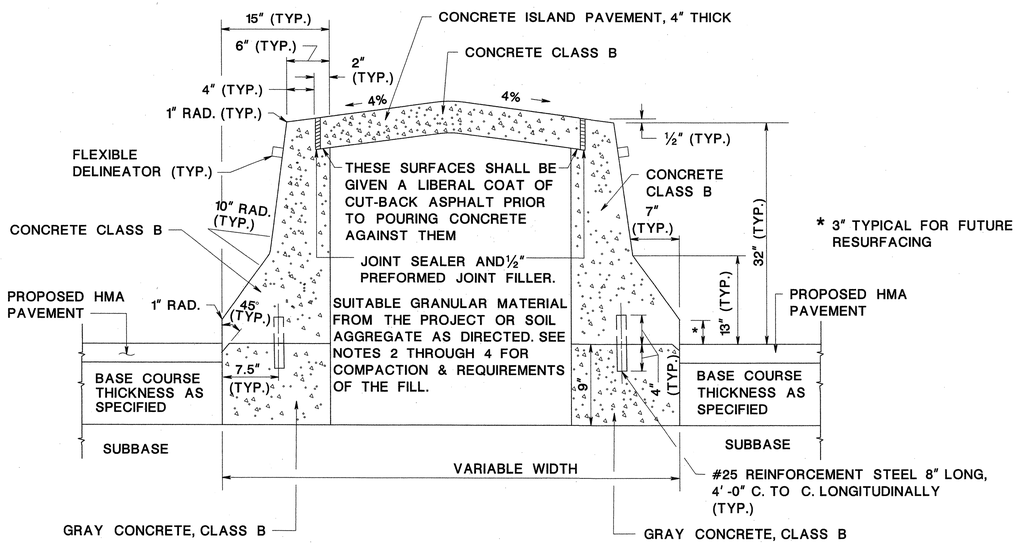

15" x 41" CONCRETE BARRIER CURB

NOTES:

1. SEE GENERAL NOTES APPLYING TO ALL BARRIER CURB CD-607-3.2.
2. COMPACTION SHALL BE IN ACCORDANCE WITH THE DIRECTED METHOD OF THE NJDOT STANDARD SPECIFICATIONS AND ITS SUPPLEMENTS.
3. THE FILL BETWEEN THE CURBS SHALL BE SHAPED AND COMPACTED TO A FIRM EVEN SURFACE. UNSTABLE MATERIAL SHALL BE REMOVED AND REPLACED WITH ACCEPTABLE MATERIAL WHICH SHALL BE COMPACTED.
4. SOIL LIFTS SHALL BE LIMITED TO 12 INCHES AND EACH LIFT SHALL BE COMPACTED.

CD-607-2.1

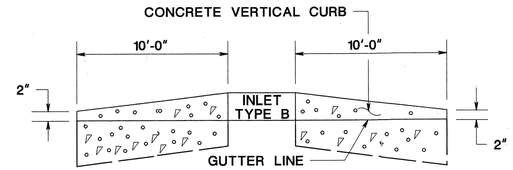

CURB TREATMENT AT BERM SECTION AND ALL CURB ENDS

CD-607-2.2

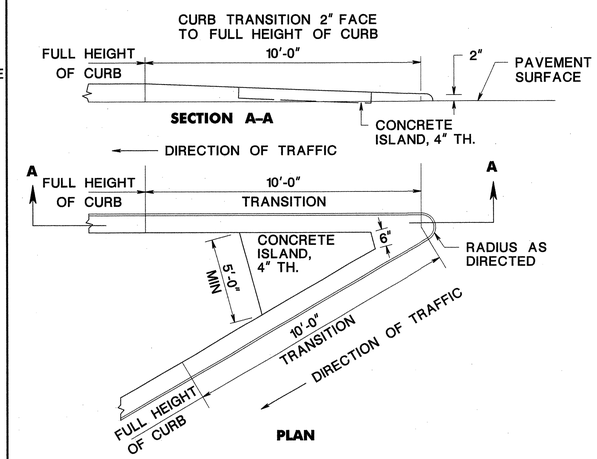

CD-607-2.3

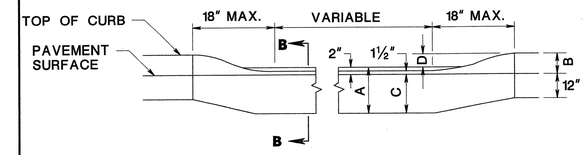

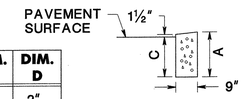

SECTION B–B

CURB SIZE	DIM. A	DIM. B	DIM. C	DIM. D
9" x 16"	16"	4"	14"	2"
9" x 18"	18"	6"	16"	4"

METHOD OF DEPRESSING CURB AT DRIVEWAYS

CD-607-2.4

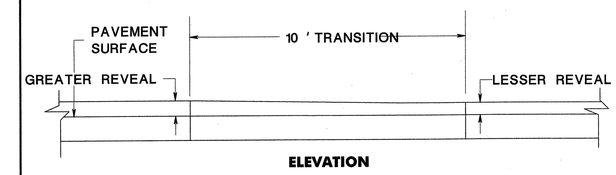

LINEAR CURB TRANSITION

CD-607-2.5

REINFORCEMENT STEEL IS IN METRIC UNITS

HMA = HOT MIX ASPHALT

BARRIER CURB AND VERTICAL CURB

N.T.S.

CD-607-2

NEW JERSEY DEPARTMENT OF TRANSPORTATION

CONSTRUCTION DETAILS

BDC08D-01-LINEAR CURB TRANSITION
BDC07D-01-ORIGINAL SHEET

pen table=
scale=
date=
ID=

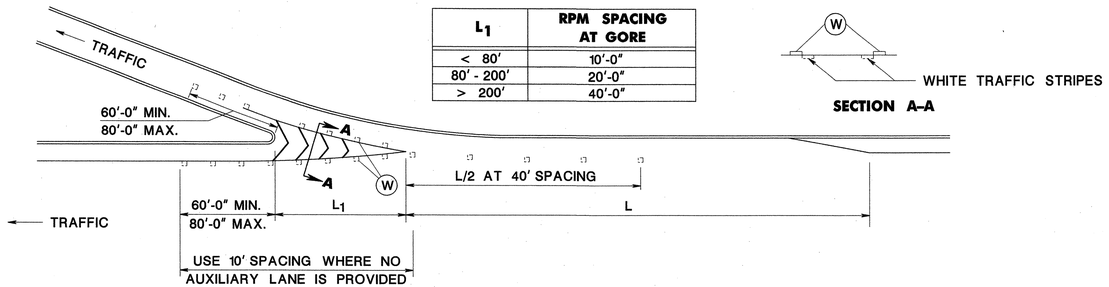

L_1	RPM SPACING AT GORE
< 80'	10'-0"
80' - 200'	20'-0"
> 200'	40'-0"

TYPICAL DECELERATION LANE TREATMENT

CD-610-1.1

LEGEND

(W) RPM, MONO-DIRECTIONAL WHITE LENS

(A) RPM, MONO-DIRECTIONAL AMBER LENS

CD-610-1.2

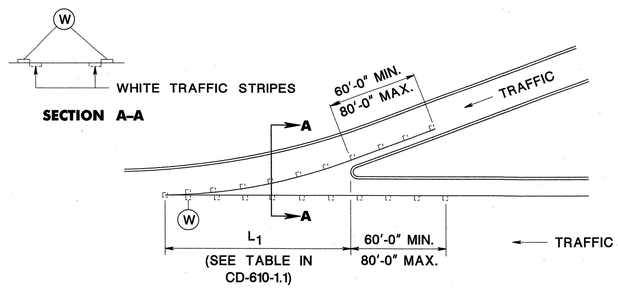

TYPICAL ACCELERATION LANE TREATMENT

CD-610-1.3

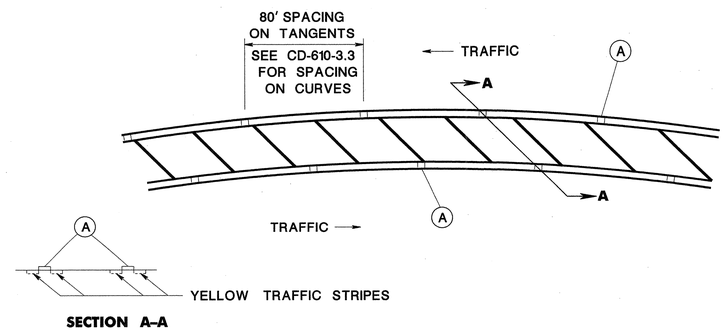

TYPICAL PAVED MEDIAN TREATMENT

CD-610-1.4

RAISED PAVEMENT MARKER, (RPM) LOCATION

N.T.S.

CD-610-1

NEW JERSEY DEPARTMENT OF TRANSPORTATION

CONSTRUCTION DETAILS

pen table=
scale=
date=
ID=
BDC08D-01-LEGEND
BDC07D-01-ORIGINAL SHEET

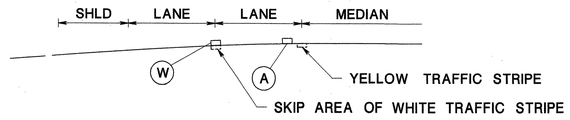

SECTION A–A (TYP.)

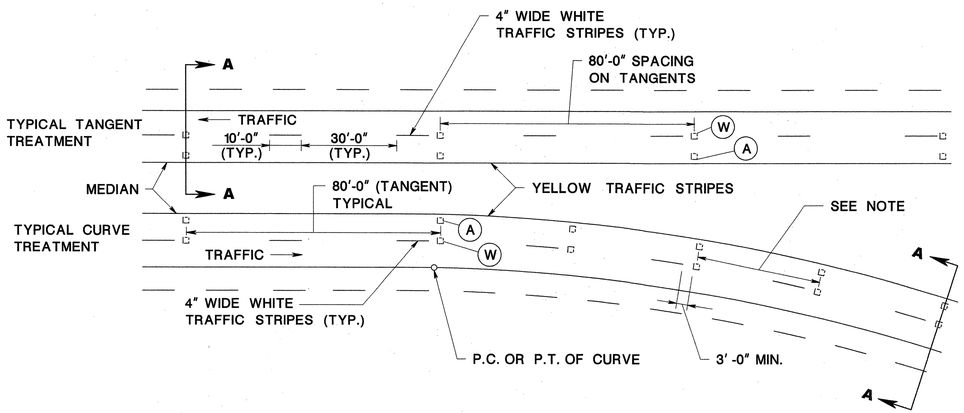

TYPICAL MULTI–LANE DIVIDED SECTION

NOTE:

FOR SPACING ON CURVES SEE CD-610-3.3

CD-610-3.1

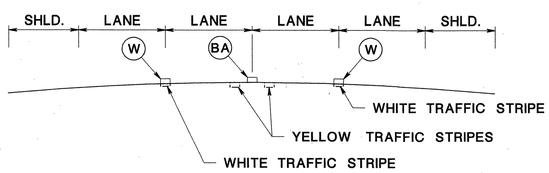

SECTION B–B

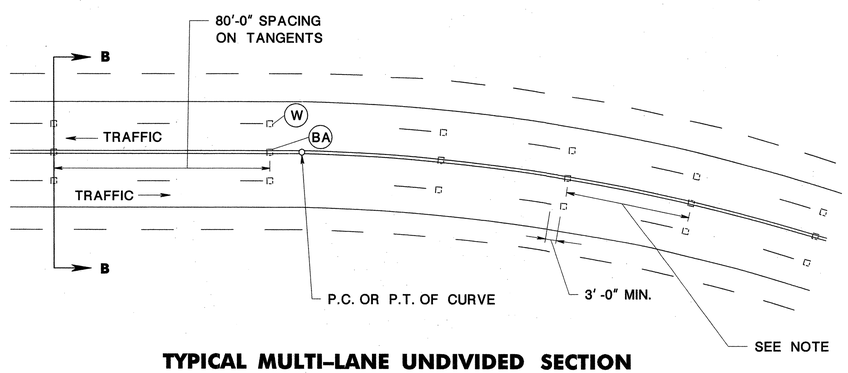

TYPICAL MULTI–LANE UNDIVIDED SECTION

NOTE:

FOR SPACING ON CURVES SEE CD-610-3.3

CD-610-3.2

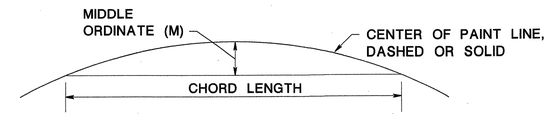

1. USE 200 FOOT TAPE.
2. ESTABLISH 200 FOOT CHORD.
3. MEASURE MIDDLE ORDINATE PERPENDICULAR TO CHORD 100 FOOT FROM EITHER END.
4. DETERMINE SPACING FROM TABLE 1.
5. WHEN DIFFICULT TO DETERMINE MIDDLE ORDINATE, 80 FOOT OR 40 FOOT SPACING WILL BE AS DIRECTED BY THE DEPARTMENT.

TABLE 1

CHORD LENGTH	MIDDLE ORDINATE	RADIUS	REFLECTOR SPACING
200'-0"	M ≥ 2'-7"	R ≤ 1910'	40'-0"
200'-0"	M < 2'-7"	R > 1910'	80'-0"

< LESS THAN
≤ EQUAL TO OR LESS THAN
> GREATER THAN
≥ EQUAL TO OR GREATER THAN

METHOD FOR DETERMINING RPM SPACING ON HORIZONTAL CURVES

CD-610-3.3

LEGEND

(W) RPM, MONO-DIRECTIONAL WHITE LENS

(A) RPM, MONO-DIRECTIONAL AMBER LENS

(BA) RPM, BI-DIRECTIONAL AMBER LENS

CD-610-3.4

RAISED PAVEMENT MARKER, (RPM) LOCATION

N.T.S.

CD-610-3

NEW JERSEY DEPARTMENT OF TRANSPORTATION

CONSTRUCTION DETAILS

BDC08D-01-LEGEND
BDC07D-01-ORIGINAL SHEET

STATE	FEDERAL PROJECT NO.	SHEET	TOTAL SHEETS
N.J.	BR-080-5(094)		

STRUCTURE NO. VARIOUS

STRUCTURE NAME VARIOUS

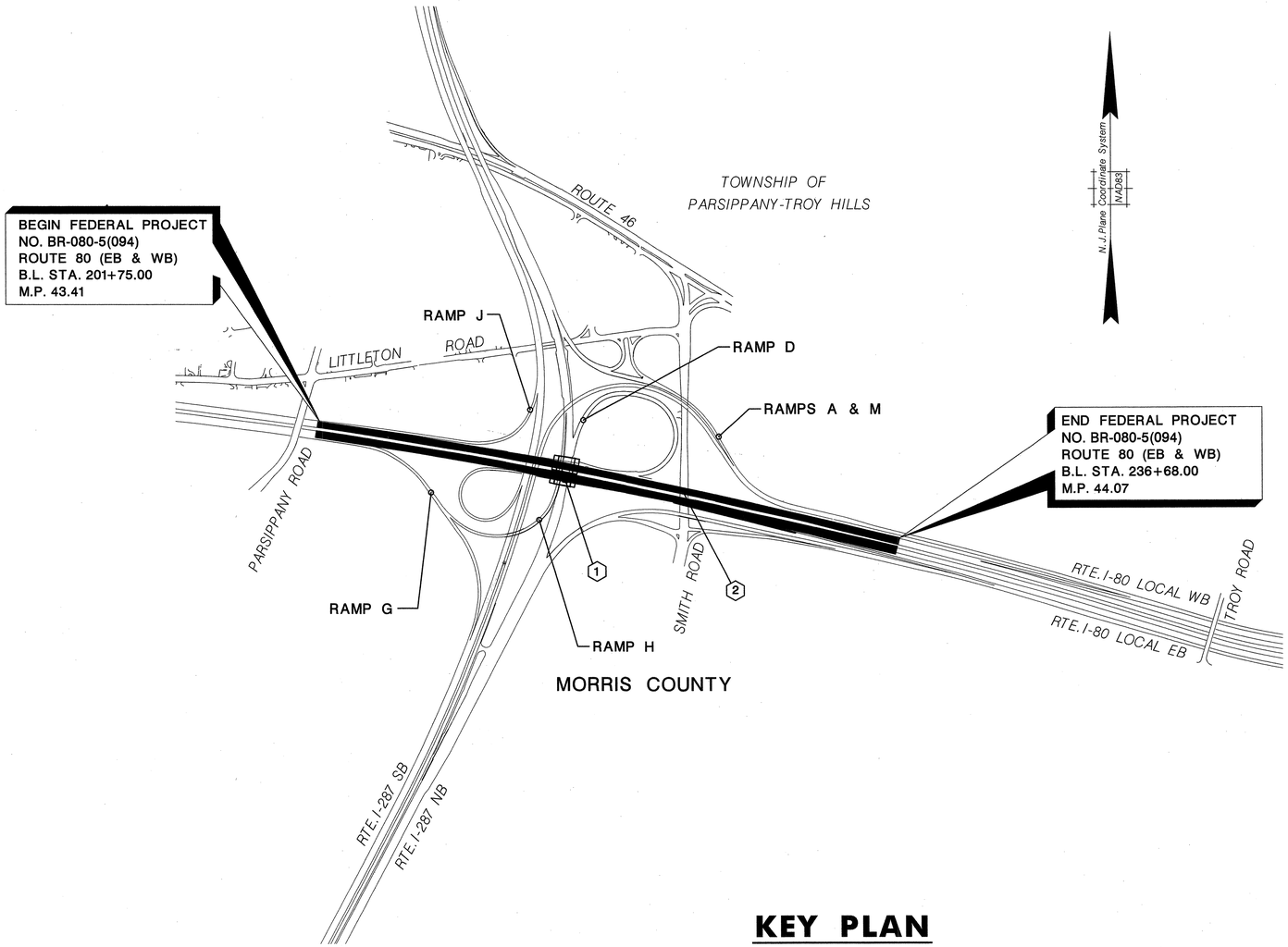

KEY PLAN

SCALE: 1"=600'
SCALE IN FEET

INDEX TO BRIDGE SHEETS		
NO.	TITLE	BRIDGE SHEET NO.
	KEY PLAN TO STRUCTURES	B-1
	ESTIMATE OF QUANTITIES	B-2
	BRIDGES	
1	ROUTE I-80 OVER ROUTE I-287 NORTHBOUND AND RAMPS D & H, STRUCTURE NO. 1414-168	B-3 TO B-28
2	ROUTE I-80 OVER SMITH ROAD, STRUCTURE NO. 1414-169	B-29 TO B-58

1"=600' 600 0 600 1200

REVISION	BY	C'K'D	DATE

NEW JERSEY DEPARTMENT OF TRANSPORTATION
BUREAU OF STRUCTURAL ENGINEERING

KEY PLAN TO STRUCTURES

ROUTE 80 BRIDGES OVER ROUTE 287 NORTHBOUND AND SMITH ROAD
CONTRACT NO. 043003714

DEWBERRY-GOODKIND, INC. COA# 24GA28047600

BRIAN D. JECKER, P.E. DATE 8-24-10

NEW JERSEY PROFESSIONAL ENGINEER LICENSE. NO. 24GE04088600

BRIDGE SHEET NO. B-1 OF B-58

72
129

CONTROL SECTION		JOB NO.	
DES. BY	J. SMITH	CHK. BY	B. JECKER
DWN. BY	A.BETANCOURT		
IN CHARGE OF J. SMITH			

Dewberry-Goodkind, Inc.
Bloomfield, N.J.

bjecker 8/19/2010 2:05:41 PM OceTDS700-BW.plt 30-Scale 3056-REDECKING-Route80-287-SB,3056\REDECKING\CAD\Struct\Bridge1\KEYPLAN-REDECKING.dgn

PROJECT: ROUTE 80 BRIDGES OVER ROUTE 287 NORTHBOUND AND SMITH ROAD, CONTRACT NO. 043003714

STATE	FEDERAL PROJECT NO.	SHEET	TOTAL SHEETS
N.J.	BR-080-5(094)		

SEQ. NO.	ITEM NO.	DESCRIPTION	UNIT	CONTRACT QUANTITY	PLAN SHEET TOTALS	IF AND WHERE DIRECTED	AS - BUILT QUANTITY
		ROUTE I-80 OVER ROUTE I-287 NORTHBOUND AND RAMPS D & H (STRUCTURE NO. 1414-168)					
95	201006P	CLEARING SITE, BRIDGE (STRUCTURE NO. 1414-168)	LUMP SUM	LUMP SUM			
96	201039P	TEMPORARY SHIELDING	LUMP SUM	LUMP SUM			
97	202009P	EXCAVATION, UNCLASSIFIED	C.Y.	240			
98	501003P	TEMPORARY SHEETING	S.F.	380			
99	504006P	REINFORCEMENT STEEL, EPOXY COATED	LBS.	137,026			
100	504024P	CONCRETE ABUTMENT WALL	C.Y.	80			
101	506012P	SHEAR CONNECTOR	UNIT	3250			
102	507006P	2½" X 2½" PREFORMED ELASTOMERIC JOINT ASSEMBLY	L.F.	325			
103	507024P	CONCRETE BRIDGE DECK, HPC	C.Y.	470			
104	507039P	CONCRETE BRIDGE PARAPET, HPC	L.F.	189			
105	507048M	24" BY 32" CONCRETE BARRIER CURB, BRIDGE	L.F.	96			
106	507051P	CONCRETE BRIDGE APPROACH	C.Y.	445			
107	512006M	BRIDGE MOUNTED SIGN SUPPORT, STRUCTURE NO. 1	UNIT	1			
108	552003M	PRESSURE INJECTION, CONCRETE CRACKS	L.F.	20			
109	554003P	POLLUTION CONTROL SYSTEM	LUMP SUM	LUMP SUM			
110	554009P	NEAR-WHITE BLAST CLEANING AND PAINTING	LUMP SUM	LUMP SUM			
111	559003M	SUBSTRUCTURE CONCRETE REPAIR	S.F.	20			
112	701021P	3" RIGID METALLIC CONDUIT	L.F.	209			

SEQ. NO.	ITEM NO.	DESCRIPTION	UNIT	CONTRACT QUANTITY	PLAN SHEET TOTALS	IF AND WHERE DIRECTED	AS - BUILT QUANTITY
		ROUTE I-80 OVER SMITH ROAD (STRUCTURE NO. 1414-169)					
113	201006P	CLEARING SITE, BRIDGE (STRUCTURE NO. 1414-169)	LUMP SUM	LUMP SUM			
114	201039P	TEMPORARY SHIELDING	LUMP SUM	LUMP SUM			
115	202009P	EXCAVATION, UNCLASSIFIED	C.Y.	330			
116	501003P	TEMPORARY SHEETING	S.F.	380			
117	504006P	REINFORCEMENT STEEL, EPOXY COATED	LBS	130,898			
118	504018P	CONCRETE WINGWALL	C.Y.	14			
119	504024P	CONCRETE ABUTMENT WALL	C.Y.	80			
120	507006P	2½" X 2½" PREFORMED ELASTOMERIC JOINT ASSEMBLY	L.F.	325			
121	507024P	CONCRETE BRIDGE DECK, HPC	C.Y.	435			
122	507039P	CONCRETE BRIDGE PARAPET, HPC	L.F.	302			
123	507048M	24" BY 32" CONCRETE BARRIER CURB, BRIDGE	L.F.	87			
124	507051P	CONCRETE BRIDGE APPROACH	C.Y.	575			
125	701021P	3" RIGID METALLIC CONDUIT	L.F.	322			

REVISION	BY	CKD.

ESTIMATE OF QUANTITIES

DEWBERRY-GOODKIND, INC.
CERTIFICATE OF AUTHORIZATION NO. A-6/A-280-A7500
BRIAN D. JECKER, P.E. DATE 8-4-10
NEW JERSEY PROFESSIONAL ENGINEER LICENSE NO. 24GE-038800

SHEET B-2 OF B-58

73
129

Dewberry-Goodkind, Inc.
Bloomfield, N.J.

In Charge of B. JECKER
Designed by W. LANG
Design Checked by R. GANDIA
Detailed by
Detail Checked by

bjecker 8/19/2010 3:31:29 PM OcsTDS700-BW.plt 30-Scale 3056-REDECKING-Route80-287-NB\3056\redecking\cad\struct\bridge1\EOQ-3056-REDECK.dgn

STATE	FEDERAL PROJECT NO.	SHEET	TOTAL SHEETS
N.J.	BR-080-5(094)		

STRUCTURE NO. **1414-168**

STRUCTURE NAME
ROUTE I-80 OVER ROUTE I-287
NORTHBOUND AND RAMPS D&H

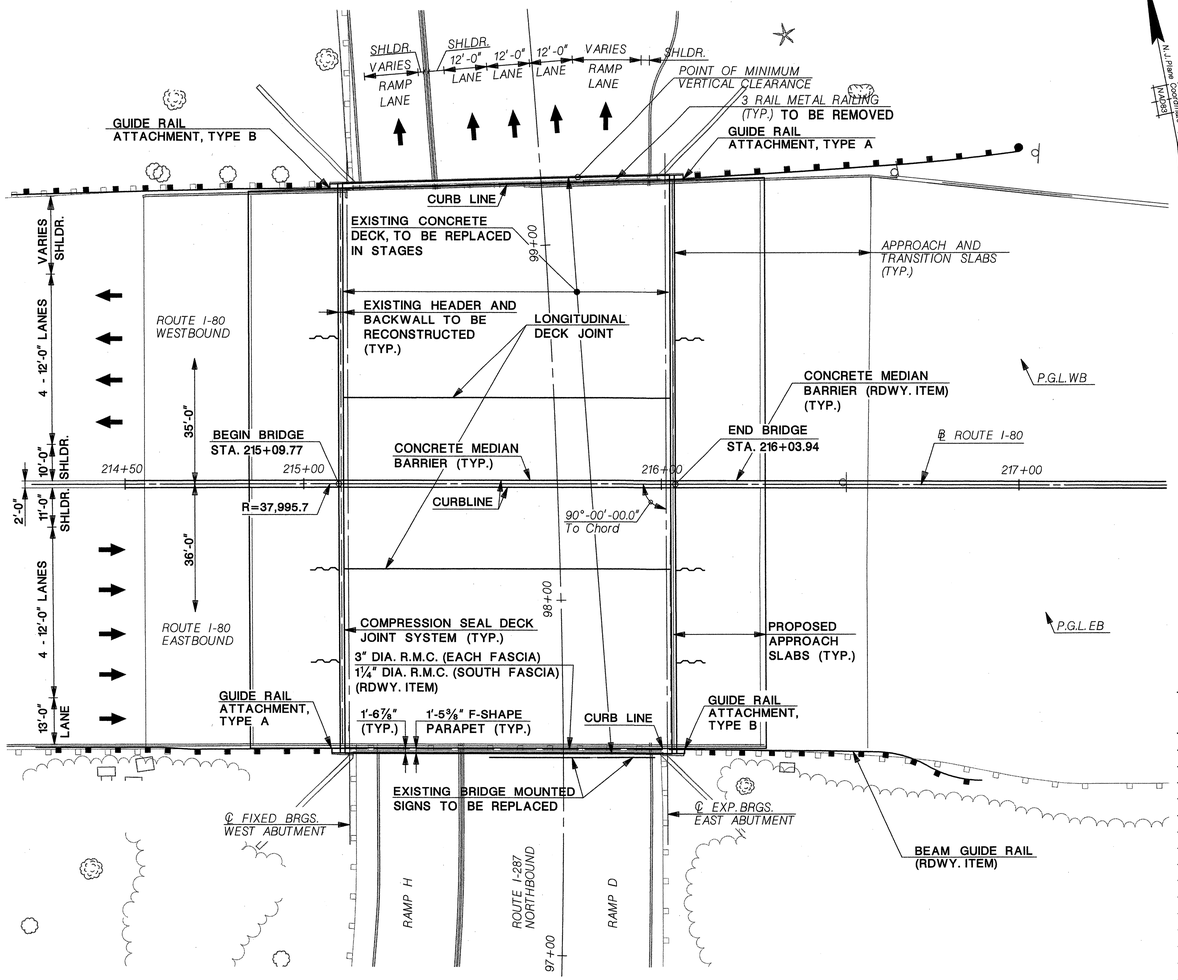

PLAN
SCALE: 1"=20'-0"

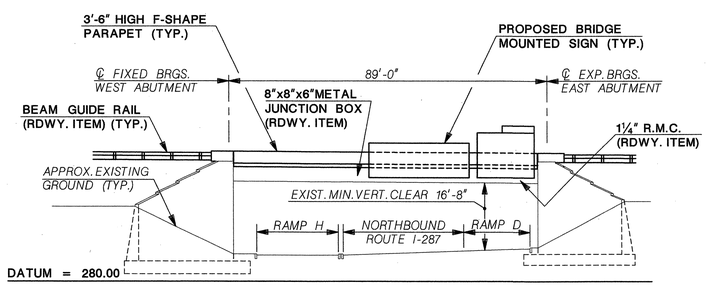

ELEVATION
SCALE: 1"=20'-0"

INDEX OF BRIDGE SHEETS

BRIDGE SHEET NO.	TITLE
B- 3	GENERAL PLAN AND ELEVATION
B- 4	TYPICAL SECTIONS
B- 5	PROFILES
B- 6	CONSTRUCTION STAGING
B- 7	WEST ABUTMENT PLAN AND ELEVATION I
B- 8	WEST ABUTMENT PLAN AND ELEVATION II
B- 9	EAST ABUTMENT PLAN AND ELEVATION I
B- 10	EAST ABUTMENT PLAN AND ELEVATION II
B- 11	ABUTMENT SECTIONS
B- 12	SUBSTRUCTURE PAY LIMITS AND DETAILS
B- 13	DECK PLAN I
B- 14	DECK PLAN II
B- 15	DECK PLAN III
B- 16	DECK SECTION
B- 17	PARAPET DETAILS
B- 18	DECK AND APPROACH SLAB GRADING PLAN
B- 19	DECK JOINT DETAILS I
B- 20	DECK JOINT DETAILS II
B- 21	BRIDGE MOUNTED SIGN SUPPORT DETAILS I
B- 22	BRIDGE MOUNTED SIGN SUPPORT DETAILS II
B- 23	SUPERSTRUCTURE DEMOLITION PLAN
B- 24	ABUTMENT DEMOLITION PLAN
B- 25	SUBSTRUCTURE REPAIR DETAILS
B- 26	BAR LIST I
B- 27	BAR LIST II
B- 28	BAR LIST III

SUMMARY OF QUANTITIES

ITEM NO.	DESCRIPTION	UNIT	CONTRACT QUANTITY
201006P	CLEARING SITE, BRIDGE (STRUCTURE NO. 1414-168)	LUMP SUM	LUMP SUM
201039P	TEMPORARY SHIELDING	LUMP SUM	LUMP SUM
202009P	EXCAVATION, UNCLASSIFIED	C.Y.	240
501003P	TEMPORARY SHEETING	S.F.	380
504006P	REINFORCEMENT STEEL, EPOXY COATED	LBS.	137,026
504024P	CONCRETE ABUTMENT WALL	C.Y.	80
506012P	SHEAR CONNECTOR	UNIT	3,250
507006P	2½" X 2½" PREFORMED ELASTOMERIC JOINT ASSEMBLY	L.F.	325
507024P	CONCRETE BRIDGE DECK, HPC	C.Y.	470
507039P	CONCRETE BRIDGE PARAPET, HPC	L.F.	189
507048M	24" BY 32" CONCRETE BARRIER CURB, BRIDGE	L.F.	96
507051P	CONCRETE BRIDGE APPROACH	C.Y.	445
512006M	BRIDGE MOUNTED SIGN SUPPORT, STRUCTURE NO. 1	UNIT	1
552003M	PRESSURE INJECTION, CONCRETE CRACKS	L.F.	20
554003P	POLLUTION CONTROL SYSTEM	LUMP SUM	LUMP SUM
554009P	NEAR-WHITE BLAST CLEANING AND PAINTING	LUMP SUM	LUMP SUM
559003M	SUBSTRUCTURE CONCRETE REPAIR	S.F.	20
701021P	3" RIGID METALLIC CONDUIT	L.F.	90

GENERAL NOTES:

1. DESIGN SPECIFICATIONS:
   AASHTO LRFD BRIDGE DESIGN SPECIFICATIONS, 4TH EDITION, 2007 WITH 2008 INTERIMS, AS MODIFIED BY SECTION 3 OF THE NJDOT DESIGN MANUAL FOR BRIDGES AND STRUCTURES, 4TH EDITION (2002).
2. CONSTRUCTION SPECIFICATIONS:
   NJDOT STANDARD SPECIFICATIONS FOR ROAD AND BRIDGE CONSTRUCTION, 2007, AS MODIFIED BY THE SPECIAL PROVISIONS.
3. LIVE LOAD:
   AASHTO LRFD HL-93 VEHICULAR LIVE LOADING OR NJDOT PERMIT VEHICLE, WHICHEVER GOVERNS.
4. CONCRETE COMPRESSIVE STRESSES:
   (a) DESIGN COMPRESSIVE STRENGTH - f'c
   C-I-P BRIDGE APPROACH:
   CLASS A ..... 4,000 PSI
   C-I-P ABUTMENTS, WINGWALLS:
   CLASS B ..... 3,000 PSI
   C-I-P DECK SLABS, PARAPETS:
   HPC-1 ..... 4,000 PSI
   (THE RETEST LIMIT FOR NON-PAY-ADJUSTMENT ITEMS SHALL BE AS SPECIFIED IN TABLE 903.03-06.4 OF THE NJDOT STANDARD SPECIFICATIONS AND AS MAY BE MODIFIED BY THE SPECIAL PROVISIONS).
   (b) CLASS MIX DESIGN STRENGTHS
   CLASS A ..... 4,600 PSI
   CLASS B ..... 3,700 PSI
   HPC-1 ..... IN ACCORDANCE WITH THE DESIGN AND VERIFICATION REQUIREMENTS SPECIFIED IN NJDOT STANDARD SPECIFICATIONS SECTION 903.05.
5. REINFORCEMENT STEEL:
   ASTM A615M (GRADE 60)
6. EXISTING PLANS
   PLANS OF THE EXISTING STRUCTURE ARE AVAILABLE FOR INSPECTION AT THE OFFICE OF QUALITY MANAGEMENT SERVICES, ENGINEERING DOCUMENTS UNIT, NEW JERSEY DEPARTMENT OF TRANSPORTATION.

   VERIFY ALL EXISTING INFORMATION IN THE FIELD BEFORE SUBMITTING A BID AND COMMENCING CONSTRUCTION.

REFERENCES:
1. FOR TYPICAL BRIDGE AND APPROACH ROADWAY SECTIONS, SEE SHEET NO. B-4.
2. FOR PROFILES, SEE SHEET NO. B-5.
3. FOR BRIDGE CONSTRUCTION STAGING SECTION, SEE SHEET NO. B-6.
4. FOR APPROACH SLAB DETAILS, SEE SHEET NO. B-55.

LEGEND:
➡ - DIRECTION OF TRAVEL
~~ - TEMPORARY SHEETING
R.M.C. - RIGID METALLIC CONDUIT

1"=20' 20 0 20 40

REVISION	BY	C'K'D	DATE

BRIDGE NO. 1

NEW JERSEY DEPARTMENT OF TRANSPORTATION
BUREAU OF STRUCTURAL ENGINEERING

GENERAL PLAN AND ELEVATION

ROUTE 80 BRIDGES OVER ROUTE 287
NORTHBOUND AND SMITH ROAD
CONTRACT NO. 043003714

DEWBERRY-GOODKIND, INC. COA# 24GA28047600
BRIAN D. JECKER, P.E. DATE 8-24-10
NEW JERSEY PROFESSIONAL ENGINEER LICENSE. NO. 24GE04088600

BRIDGE SHEET NO. B-3 OF B-58

74
129

CONTROL SECTION		JOB NO.	
DES. BY	J. SMITH	CHK. BY	B. JECKER
DWN. BY	J. CRESPO		

IN CHARGE OF J. SMITH

Dewberry-Goodkind, Inc.
Bloomfield, N.J.

bjecker 8/19/2010 2:06:55 PM OceTDS700-BW.plt 30-Scale 3056-REDECKING-Route80-287-09\3056\Redecking\CAD\Struct\Bridge1\BR1-SIGNGPE.dgn

STATE	FEDERAL PROJECT NO.	SHEET	TOTAL SHEETS
N.J.	BR-080-5(094)		

STRUCTURE NO. **1414-168**

STRUCTURE NAME
ROUTE I-80 OVER ROUTE I-287
NORTHBOUND AND RAMPS D&H

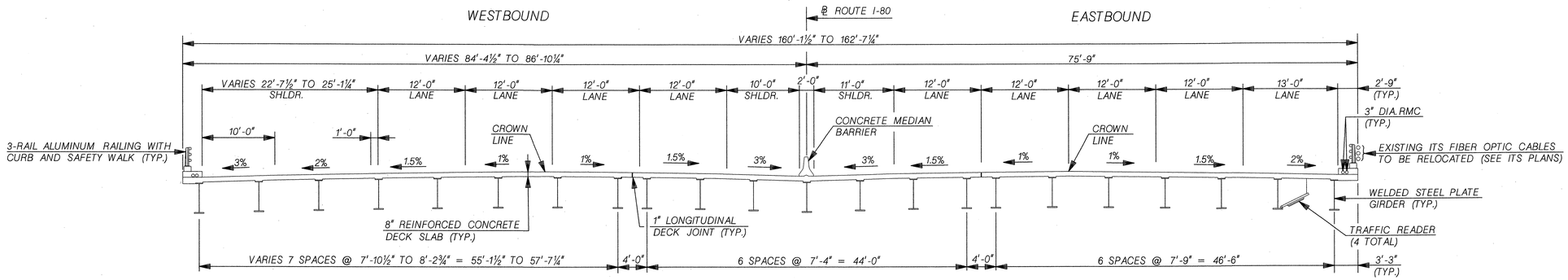

EXISTING BRIDGE SECTION

SCALE: ⅛" = 1'-0"

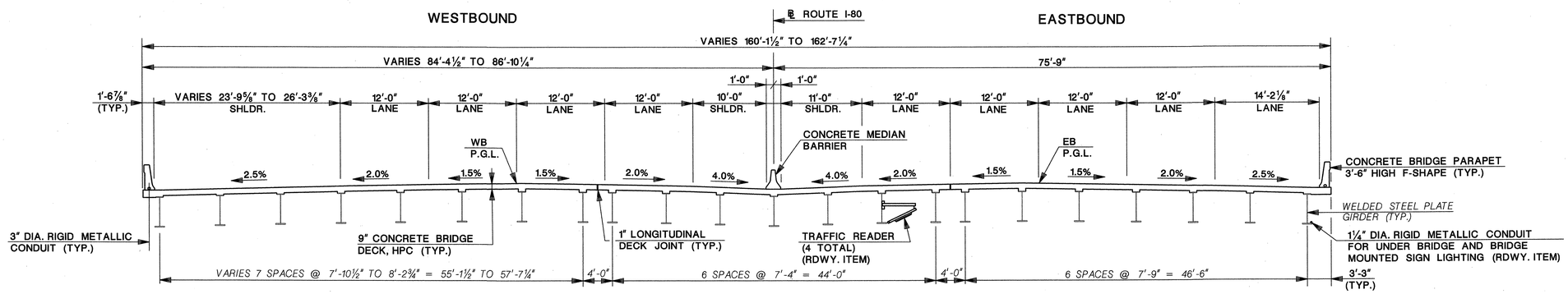

PROPOSED BRIDGE SECTION

SCALE: ⅛" = 1'-0"

NOTES:

1. PROPOSED AND EXISTING BRIDGE MOUNTED SIGN STRUCTURES NOT SHOWN FOR CLARITY.
2. ALL TYPICAL SECTIONS ARE LOOKING EAST (UPSTATION).

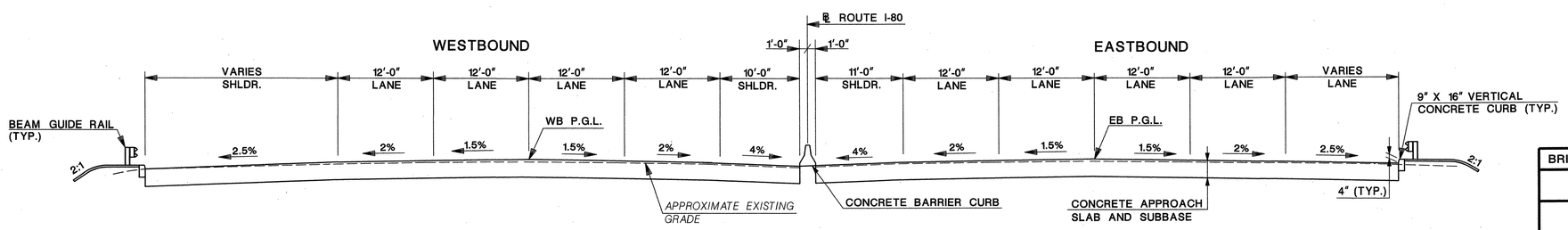

TYPICAL APPROACH ROADWAY SECTION

SCALE: ⅛" = 1'-0"

⅛"=1'-0" 8 0 8 16

REVISION	BY	C'K'D	DATE

BRIDGE NO. 1

NEW JERSEY DEPARTMENT OF TRANSPORTATION
BUREAU OF STRUCTURAL ENGINEERING

TYPICAL SECTIONS

ROUTE 80 BRIDGES OVER ROUTE 287
NORTHBOUND AND SMITH ROAD
CONTRACT NO. 043003714

DEWBERRY-GOODKIND, INC. COA# 24GA28047600

BRIAN D. JECKER, P.E. 8-24-10 DATE
NEW JERSEY PROFESSIONAL ENGINEER LICENSE. NO. 24GE04088600

BRIDGE SHEET NO. B-4 OF B-58

75
129

CONTROL SECTION		JOB NO.	
DES. BY	P. HULYALKAR	CHK. BY	J. SMITH
DWN. BY	A.BETANCOURT		

IN CHARGE OF J. SMITH

Dewberry-Goodkind, Inc.
Bloomfield, N.J.

bjecker 8/19/2010 2:05:50 PM OceTDS700-BW.plt 30-Scale 3056-REDECKING-Route80-287-Rt3,3056\Redecking\CAD\Struct\Bridge1\BR1-TYPSECT.dgn

STATE	FEDERAL PROJECT NO.	SHEET	TOTAL SHEETS
N.J.	BR-080-5(094)		

STRUCTURE NO. 1414-168

STRUCTURE NAME
ROUTE I-80 OVER ROUTE I-287
NORTHBOUND AND RAMPS D&H

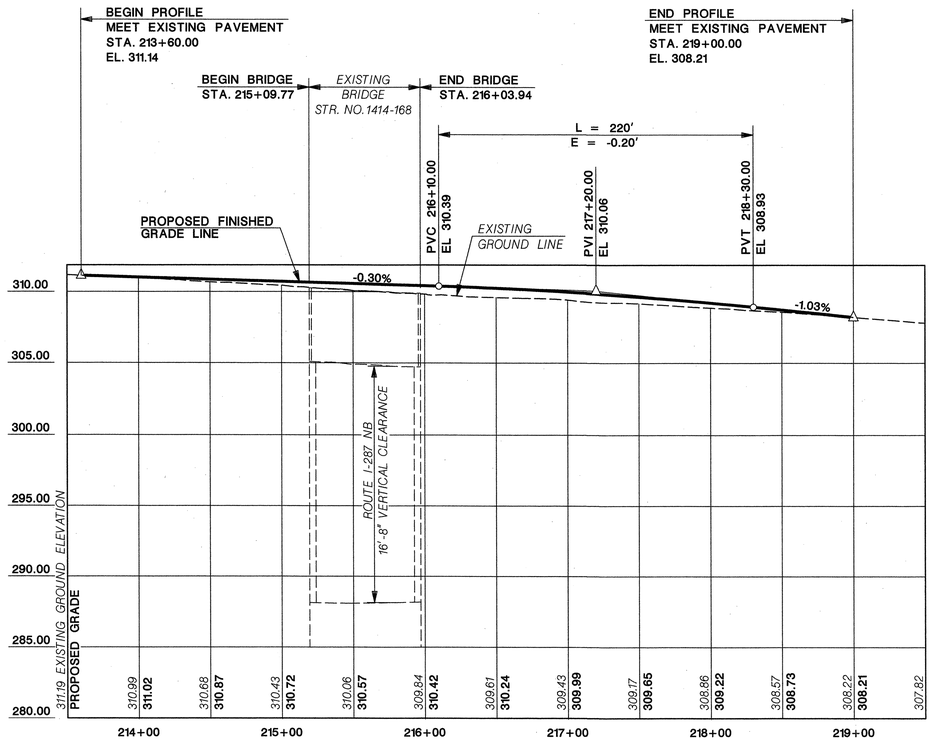

PROFILE - ROUTE I-80 EASTBOUND
SCALE: 1"=50' H
1"=5' V

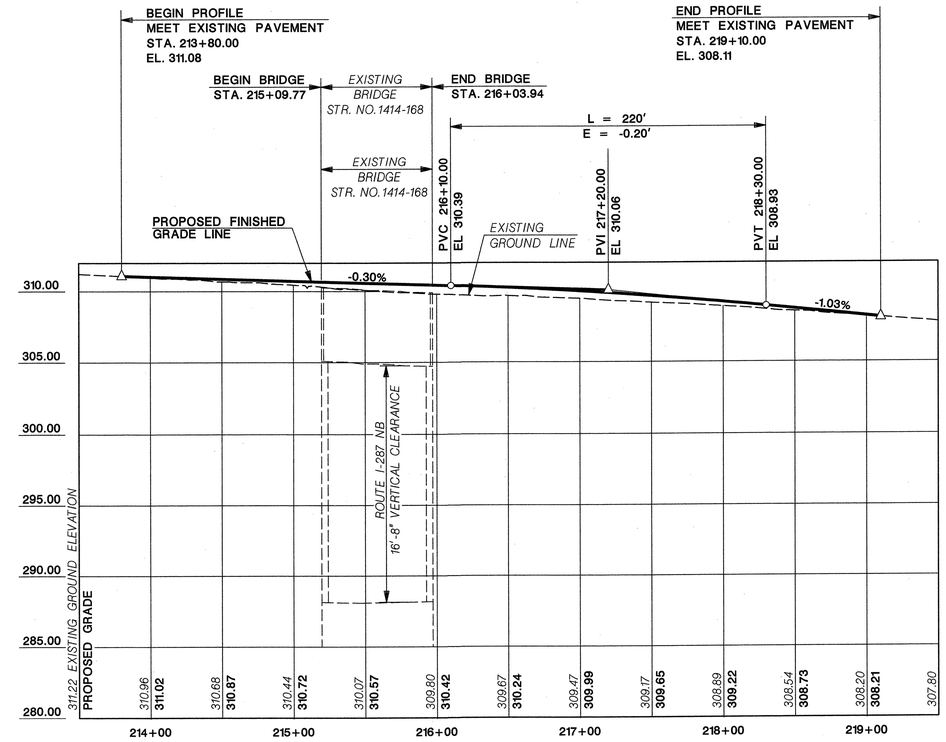

PROFILE - ROUTE I-80 WESTBOUND
SCALE: 1"=50' H
1"=5' V

1"=50' 50 0 50 100

1"=5' 5 0 5 10

REVISION	BY	C'K'D	DATE

BRIDGE NO. 1

NEW JERSEY DEPARTMENT OF TRANSPORTATION
BUREAU OF STRUCTURAL ENGINEERING

PROFILES

ROUTE 80 BRIDGES OVER ROUTE 287
NORTHBOUND AND SMITH ROAD
CONTRACT NO. 043003714

DEWBERRY-GOODKIND, INC. COA# 24GA28047600

BRIAN D. JECKER, P.E. DATE 8-24-10

NEW JERSEY PROFESSIONAL ENGINEER LICENSE. NO. 24GE04088600

BRIDGE SHEET NO. B-5 OF B-58

76
129

CONTROL SECTION		JOB NO.	
DES. BY	W. LANG	CHK. BY	J. SMITH
DWN. BY	A.BETANCOURT		

IN CHARGE OF J. SMITH

Dewberry-Goodkind, Inc.
Bloomfield, N.J.

bjecker 8/19/2010 2:05:53 PM OceTDS700-BW.plt 30-Scale 3056-REDECKING-Route80-287-9B\3056\Redecking\CAD\Struct\Bridge1\BR1-PROFILE.dgn

STATE	FEDERAL PROJECT NO.	SHEET	TOTAL SHEETS
N.J.	BR-080-5(094)		

STRUCTURE NO. 1414-168

STRUCTURE NAME
ROUTE I-80 OVER ROUTE I-287
NORTHBOUND AND RAMPS D&H

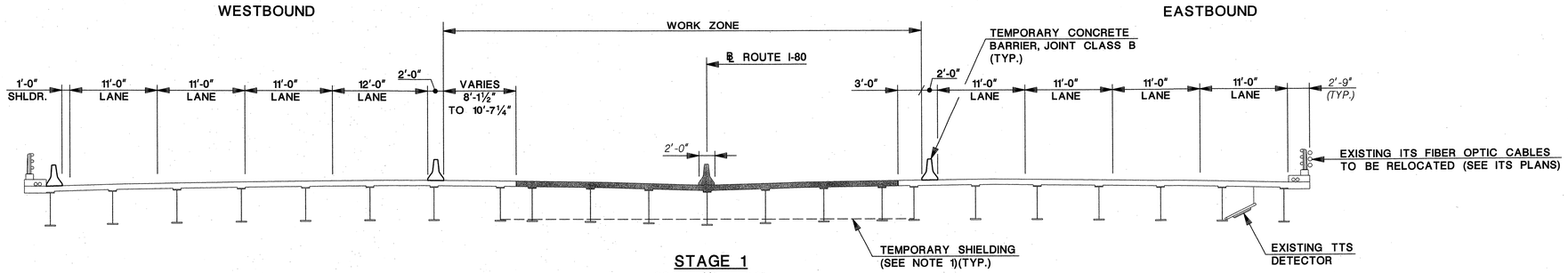

STAGE 1
SCALE: ⅛" = 1'-0"

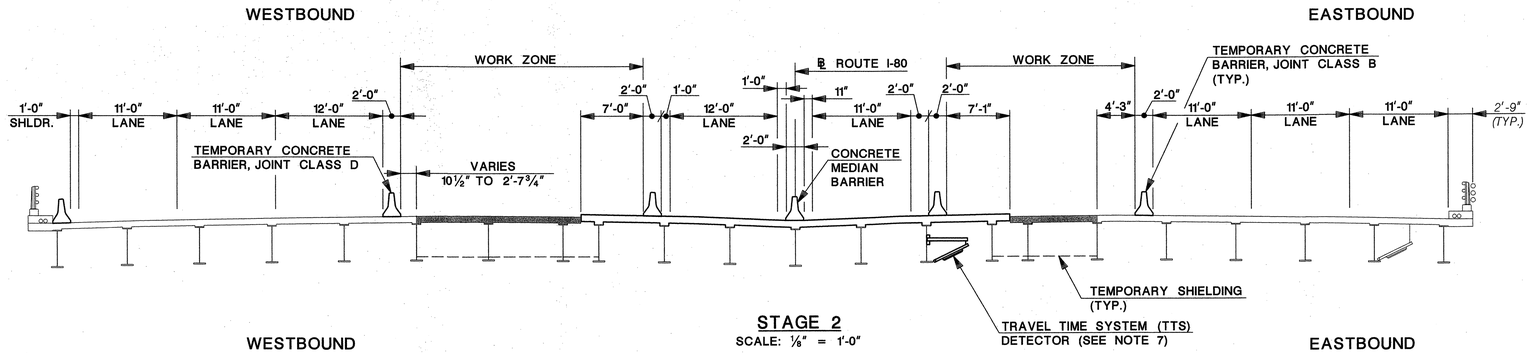

STAGE 2
SCALE: ⅛" = 1'-0"

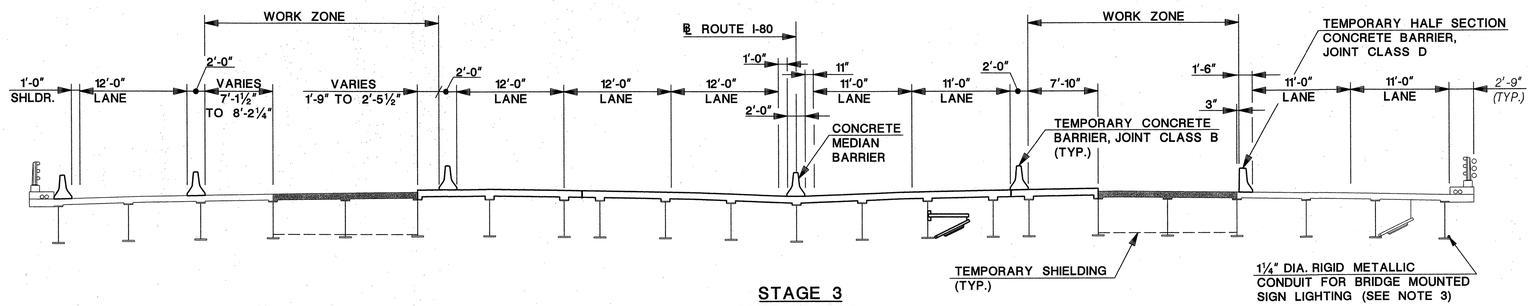

STAGE 3
SCALE: ⅛" = 1'-0"

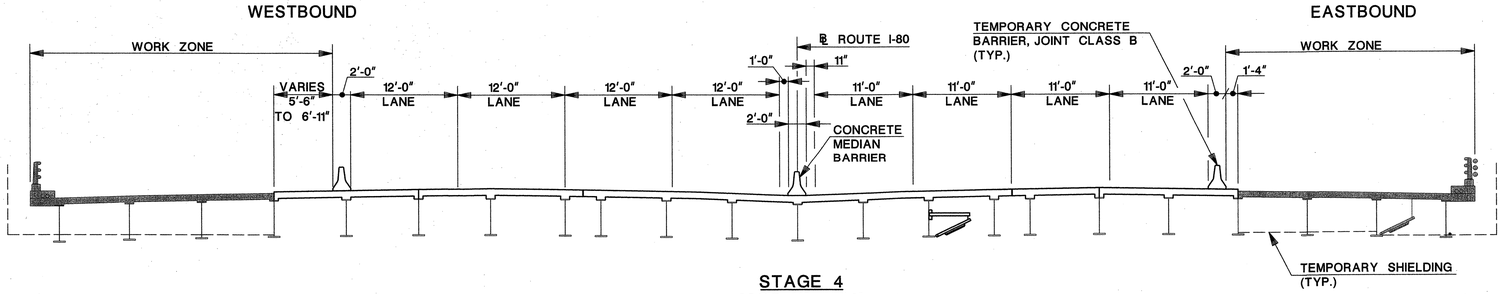

STAGE 4
SCALE: ⅛" = 1'-0"

NOTES:

1. INSTALL TEMPORARY SHIELDING BEFORE BEGINNING DEMOLITION.
2. IN STAGE 3, THE USE OF A WORK BRIDGE FOR FINISHING THE DECK CONCRETE MAY NOT BE FEASIBLE. SUBMIT ALTERNATIVE METHODS OF FINISHING TO THE RE FOR APPROVAL.
3. RELOCATE FIBER OPTIC CABLES BEFORE REMOVING THE SOUTH BRIDGE RAILING.
4. INSTALL 1¼" DIAMETER RIGID METALLIC CONDUIT AND LIGHTING CIRCUIT BEFORE REMOVING SOUTH SAFETY WALK.
5. TEMPORARILY RELOCATE EXISTING BRIDGE MOUNTED SIGN PANEL A OFF STRUCTURE DURING STAGE 1.
6. REMOVE EXISTING BRIDGE MOUNTED SIGN STRUCTURE SUPPORTS DURING STAGE 4. EXISTING BRIDGE MOUNTED SIGN SUPPORTS NOT SHOWN FOR CLARITY.
7. INSTALL NEW TRAVEL TIME SYSTEM (TTS) DETECTOR AFTER STAGE 1 AND PRIOR TO STAGE 4. REMOVE THE EXISTING DETECTOR ONLY AFTER THE NEW DETECTOR IS INSTALLED AND OPERATIONAL.

REFERENCE:

1. FOR TTS DETECTOR AND CONDUIT MOUNTING DETAILS, SEE STANDARD ITS DETAILS ITS 701-5, ITS 701-6 AND ITS 704-19.
2. FOR STAGING OF SIGN PANEL RELOCATION AND REMOVAL, SEE TRAFFIC CONTROL AND STAGING PLANS.

LEGEND:

EXISTING STRUCTURE TO BE REMOVED

CONTROL SECTION		JOB NO.	
DES. BY	J. GASS	CHK. BY	J. SMITH
DWN. BY	M. NAFIS		
IN CHARGE OF J. SMITH			

⅛"=1'-0" 8 0 8 16

REVISION	BY	C'K'D	DATE

BRIDGE NO. 1

NEW JERSEY DEPARTMENT OF TRANSPORTATION
BUREAU OF STRUCTURAL ENGINEERING

CONSTRUCTION STAGING

ROUTE 80 BRIDGES OVER ROUTE 287 NORTHBOUND AND SMITH ROAD CONTRACT NO. 043003714

DEWBERRY-GOODKIND, INC. COA# 24GA28047600

BRIAN D. JECKER, P.E. DATE 8-24-10
NEW JERSEY PROFESSIONAL ENGINEER LICENSE. NO. 24GE04088600

BRIDGE SHEET NO. B-6 OF B-58

77
129

Dewberry-Goodkind, Inc.
Bloomfield, N.J.

bjecker 8/23/2010 2:24:23 PM OceTDS700-BW.plt 30-Scale 3056-REDECKING-Route80-287-GB,3056\REDECKING\CAD\Struct\Bridget\BR1-STAGE.dgn

STATE	FEDERAL PROJECT NO.	SHEET	TOTAL SHEETS
N.J.	BR-080-5(094)		

STRUCTURE NO. 1414-168

STRUCTURE NAME
ROUTE I-80 OVER ROUTE I-287
NORTHBOUND AND RAMPS D&H

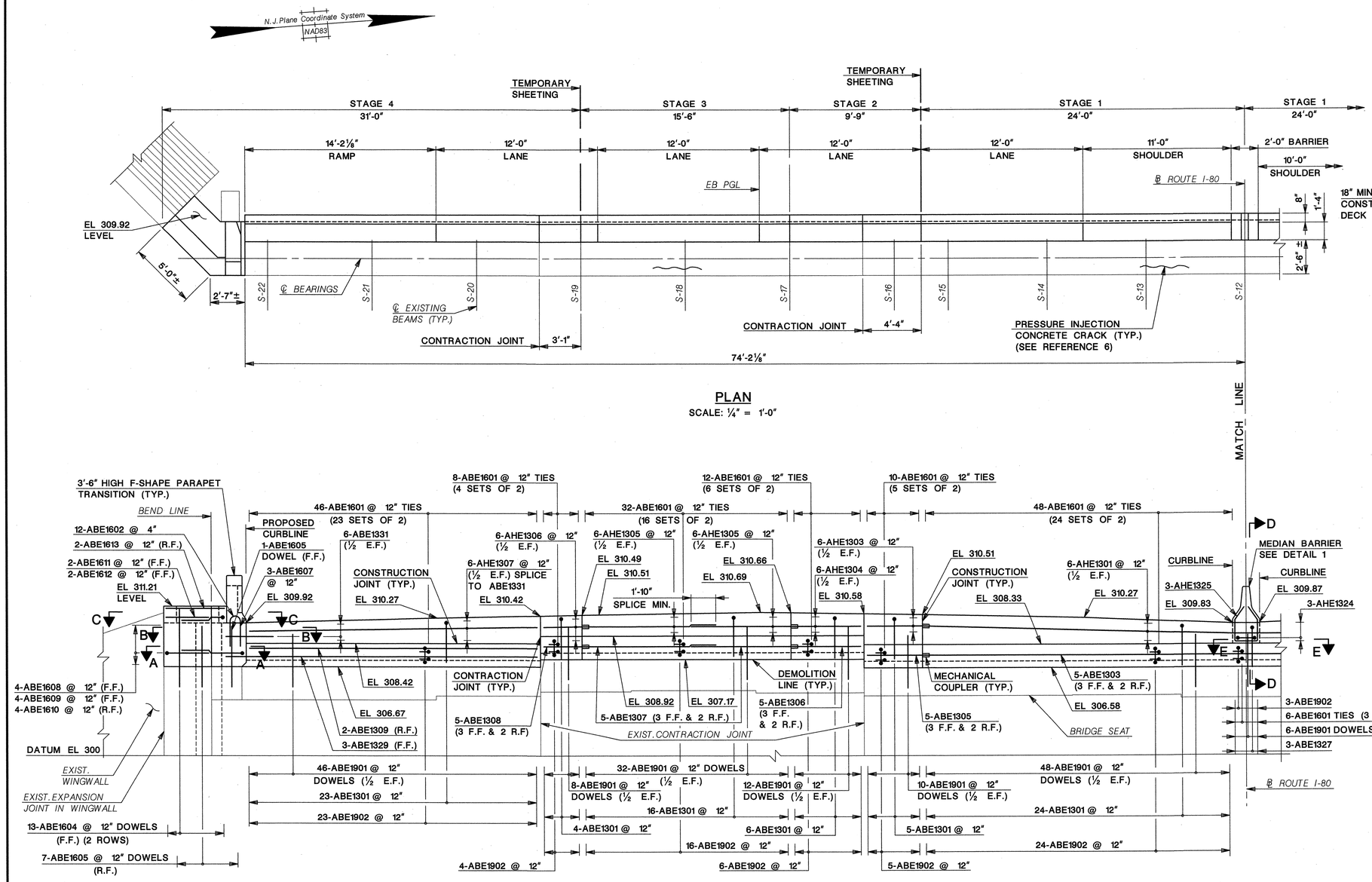

PLAN

SCALE: ¼" = 1'-0"

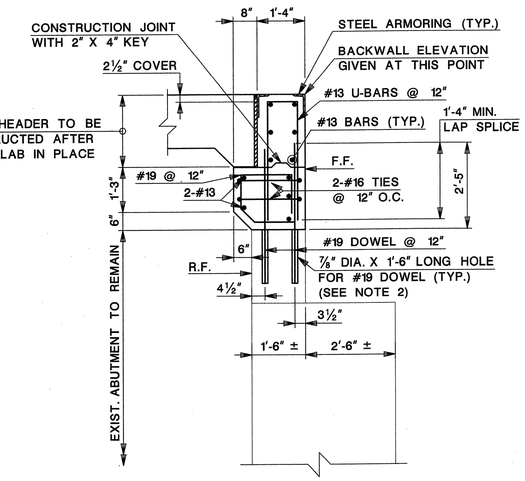

TYPICAL BACKWALL SECTION

SCALE: ½" = 1'-0"

NOTES:
1. FOR ARMORING ANGLES, SEE DECK JOINT DETAILS.
2. SPACE REINFORCEMENT IN HEADER TO CLEAR STUDS FOR ARMORING ANGLES.

ELEVATION

SCALE: ¼" = 1'-0"

NOTES:
1. FOR ARMORING ANGLES, SEE DECK JOINT DETAILS.
2. SPACE REINFORCEMENT IN HEADER TO CLEAR STUDS FOR ARMORING ANGLES.

REFERENCES:
1. FOR WEST ABUTMENT PLAN AND ELEVATION II, AND ADDITIONAL ABUTMENT NOTESSEE SHEET NO. B-8.
2. FOR SECTIONS A-A, B-B, C-C, D-D, E-E AND DETAIL 1, SEE SHEET NO. B-11.
3. FOR PAY LIMIT DETAILS, SEE SHEET NO. B-12.
4. FOR PARAPET TRANSITION DETAILS, SEE SHEET NO. B- 17.
5. FOR DECK JOINT DETAILS, SEE SHEET NO. B-19.
6. FOR ABUTMENT DEMOLITION PLAN, SEE SHEET NO. B-24.
7. FOR SUBSTRUCTURE REPAIR DETAILS, SEE SHEET NO. B-25.
8. FOR BAR LIST, SEE SHEET NO. B-26.

QUANTITIES

ITEM NO.	DESCRIPTION	UNIT	CONTRACT QUANTITY
202009P	EXCAVATION, UNCLASSIFIED	C.Y.	120
501003P	TEMPORARY SHEETING	S.F.	190
504006P	REINFORCEMENT STEEL EPOXY COATED	LBS.	7,164
504024P	CONCRETE ABUTMENT WALL	C.Y.	40
507039P	CONCRETE BRIDGE PARAPET, HPC	L.F.	8
507048M	24" X 32" CONCRETE BARRIER CURB, BRIDGE	L.F.	2
552003M	PRESSURE INJECTION, CONCRETE CRACK	L.F.	10
701021P	3" RIGID METALLIC CONDUIT	L.F.	18

LEGEND:
F.F. - FRONT FACE
R.F. - REAR FACE
E.F. - EACH FACE
~~~ - CRACK

½"=1'-0" 1 6" 0 2 4

¼"=1'-0" 4 0 4 8

REVISION	BY	C'K'D	DATE

BRIDGE NO. 1

NEW JERSEY DEPARTMENT OF TRANSPORTATION
BUREAU OF STRUCTURAL ENGINEERING

WEST ABUTMENT PLAN & ELEVATION I

ROUTE 80 BRIDGES OVER ROUTE 287
NORTHBOUND AND SMITH ROAD
CONTRACT NO. 043003714

DEWBERRY-GOODKIND, INC. COA# 24GA28047600
BRIAN D. JECKER, P.E. 8-24-10 DATE
NEW JERSEY PROFESSIONAL ENGINEER LICENSE. NO. 24GE04088600

BRIDGE SHEET NO. B-7 OF B-58

78
129

CONTROL SECTION		JOB NO.	
DES. BY	R. GANDIA	CHK. BY	B. JECKER
DWN. BY	M. NAFIS		

IN CHARGE OF J. SMITH

Dewberry-Goodkind, Inc.
Bloomfield, N.J.

bjecker 8/19/2010 2:06:01 PM OceTDS700-BW.plt 30-Scale 3056-REDECKING-Route80-287-v8\3056\redecking\cad\struct\bridge1\BR1-WABUTP&EL-1.dgn
~~~

STATE	FEDERAL PROJECT NO.	SHEET	TOTAL SHEETS
N.J.	BR-080-5(094)		

STRUCTURE NO. **1414-168**

STRUCTURE NAME
ROUTE I-80 OVER ROUTE I-287
NORTHBOUND AND RAMPS D&H

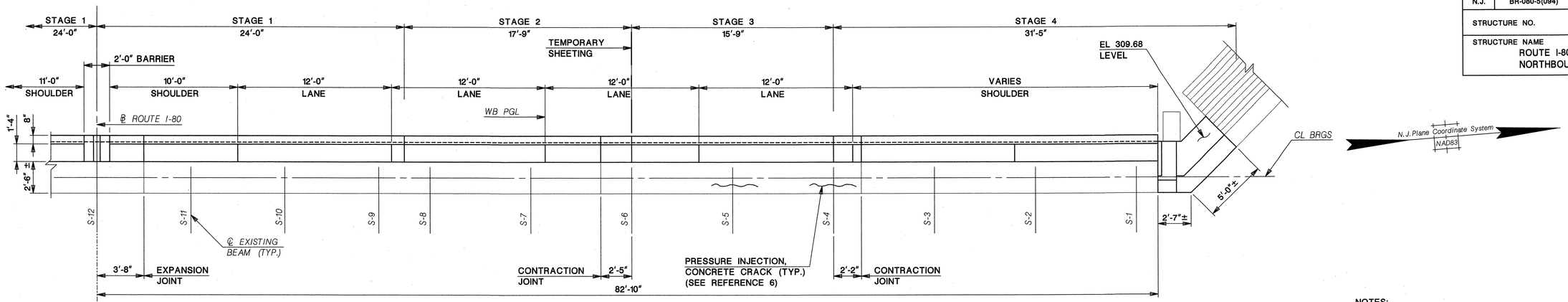

PLAN

SCALE: ¼" = 1'-0"

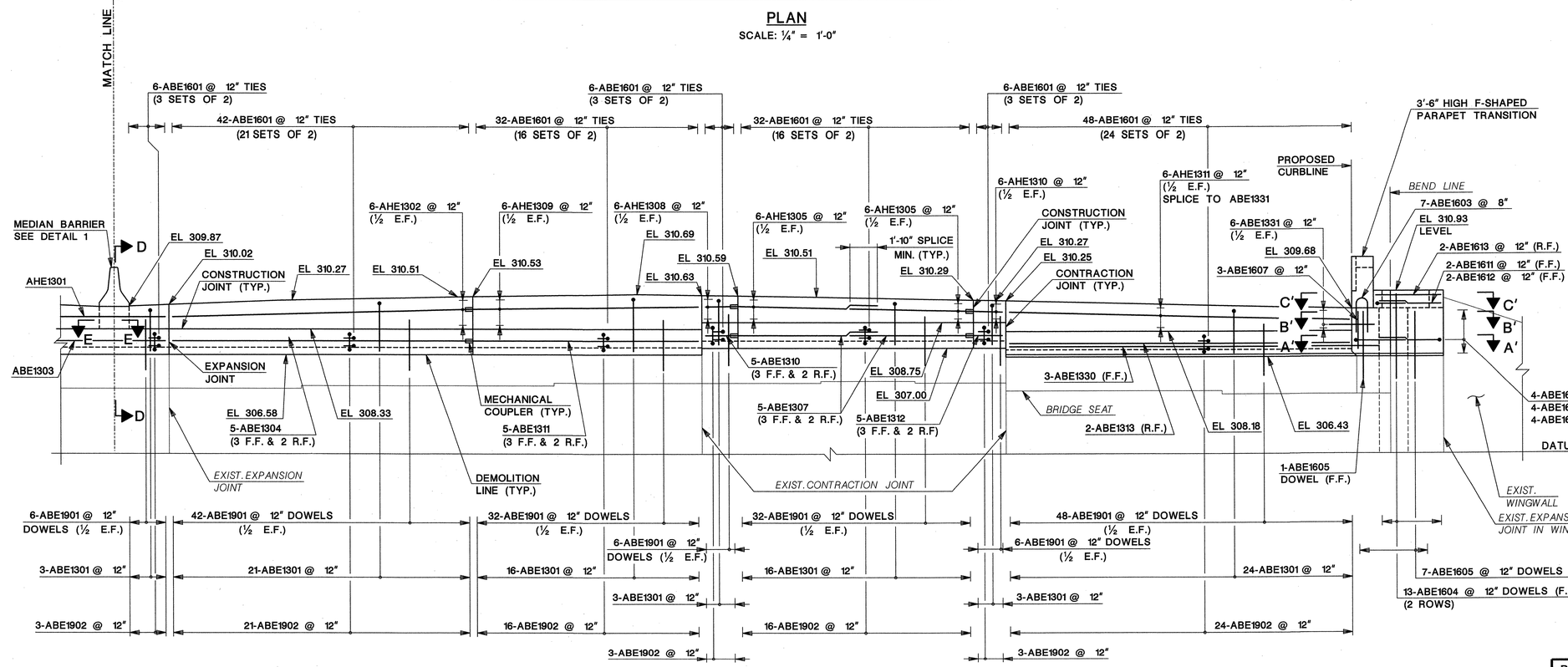

ELEVATION

SCALE: ¼" = 1'-0"

NOTES:

1. EPOXY COAT ALL REINFORCEMENT STEEL.
2. CORE HOLES FOR DOWELS INTO EXISTING CONCRETE AND FILL WITH EPOXY GROUT. INCLUDE THE COST OF DRILLING AND GROUTING INTO EXISTING CONCRETE UNDER THE PAY ITEM "CONCRETE ABUTMENT WALL".
3. CLEAN & ROUGHEN BY SAND BLASTING ALL SURFACES OF EXISTING CONCRETE TO BE IN CONTACT WITH NEW CONCRETE AND ALL EXPOSED REINFORCEMENT STEEL. CONCRETE SURFACE SHALL BE CLEAN AND FREE OF LAITANCE WITH THE SURFACE ROUGHENED TO A MINIMUM AMPLITUDE OF ¼" BEFORE PLACING CONCRETE. INCLUDE ALL COSTS UNDER THE PAY ITEM "CONCRETE ABUTMENT WALL".
4. USE MECHANICAL COUPLERS AT STAGE LINE CONSTRUCTION JOINTS AS SHOWN. COUPLERS SHALL CONFORM TO SUBSECTION 905.04. INCLUDE THE COST OF THE COUPLERS IN THE ITEM "REINFORCEMENT STEEL, EPOXY COATED".

REFERENCES:

1. FOR TYPICAL BACKWALL SECTION, SEE SHEET NO. B-7.
2. FOR SECTIONS A'-A', B'-B', C'-C', D-D, E-E AND DETAIL 1, SEE SHEET NO. B-11.
3. FOR PAY LIMIT DETAILS, SEE SHEET NO. B-12.
4. FOR PARAPET TRANSITION, SEE SHEET NO. B-17.
5. FOR ABUTMENT DEMOLITION PLAN, SEE SHEET NO. B-24.
6. FOR SUPERSTRUCTURE REPAIR DETAILS, SEE SHEET NO. B-25.
7. FOR BAR LIST, SEE SHEET NO. B-26.

LEGEND:
F.F. - FRONT FACE
R.F. - REAR FACE
E.F. - EACH FACE
~~~~ - CRACK

¼"=1'-0" 4 0 4 8

REVISION	BY	C'K'D	DATE

BRIDGE NO. 1

NEW JERSEY DEPARTMENT OF TRANSPORTATION
BUREAU OF STRUCTURAL ENGINEERING

WEST ABUTMENT PLAN & ELEVATION II

ROUTE 80 BRIDGES OVER ROUTE 287
NORTHBOUND AND SMITH ROAD
CONTRACT NO. 043003714

DEWBERRY-GOODKIND, INC. COA# 24GA28047600

BRIAN D. JECKER, P.E. 8-19-10 DATE
NEW JERSEY PROFESSIONAL ENGINEER LICENSE. NO. 24GE04088600

BRIDGE SHEET NO. B-8 OF B-58

79
129

CONTROL SECTION		JOB NO.	
DES. BY	R. GANDIA	CHK. BY	B. JECKER
DWN. BY	M. NAFIS		
IN CHARGE OF J. SMITH			

Dewberry-Goodkind, Inc.
Bloomfield, N.J.
~~~~

STATE	FEDERAL PROJECT NO.	SHEET	TOTAL SHEETS
N.J.	BR-080-5(094)		

STRUCTURE NO. **1414-168**

STRUCTURE NAME
ROUTE I-80 OVER ROUTE I-287
NORTHBOUND AND RAMPS D&H

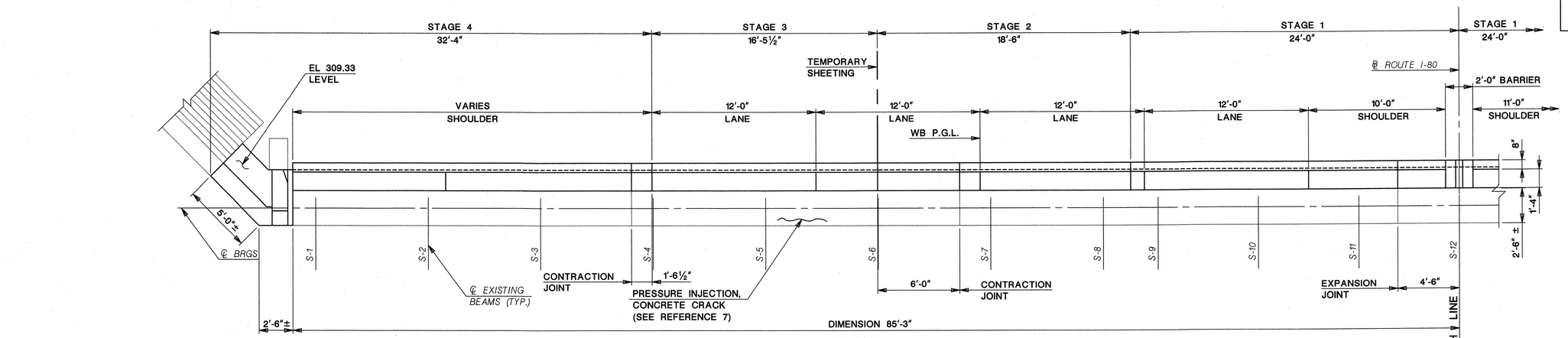

PLAN

SCALE: ¼" = 1'-0"

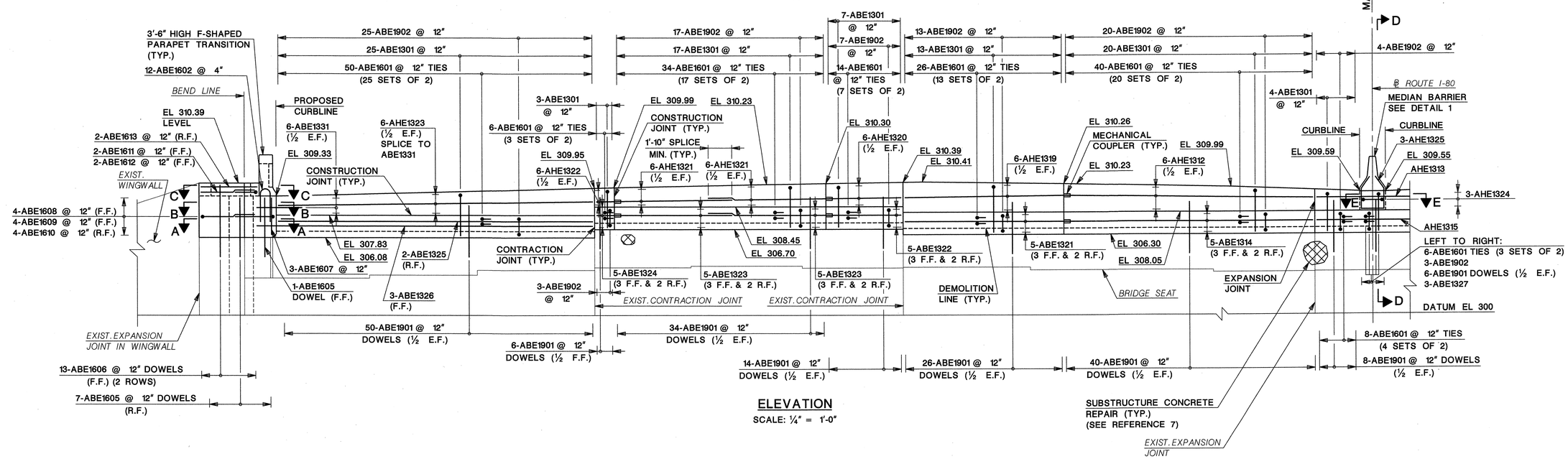

ELEVATION

SCALE: ¼" = 1'-0"

QUANTITIES

ITEM NO.	DESCRIPTION	UNIT	CONTRACT QUANTITY
202009P	EXCAVATION, UNCLASSIFIED	C.Y.	120
501003P	TEMPORARY SHEETING	S.F.	190
504006P	REINFORCEMENT STEEL EPOXY COATED	LBS.	7,218
504024P	CONCRETE ABUTMENT WALL	C.Y.	40
507039P	CONCRETE BRIDGE PARAPET, HPC	L.F.	8
507048M	24" X 32" CONCRETE BARRIER CURB, BRIDGE	L.F.	2
552003M	PRESSURE INJECTION, CONCRETE CRACK	L.F.	10
559003M	SUBSTRUCTURE CONCRETE REPAIR	S.F.	20
701021P	3" RIGID METALLIC CONDUIT	L.F.	18

LEGEND:
F.F. - FRONT FACE
R.F. - REAR FACE
E.F. - EACH FACE
- CRACK
- SPALLED AREA

NOTES:
1. FOR ABUTMENT NOTES, SEE SHEET NO. B-8.

REFERENCES:
1. FOR TYPICAL BACKWALL SECTION, SEE SHEET B-7.
2. FOR EAST ABUTMENT PLAN AND ELEVATION II, SEE SHEET NO. B-10.
3. FOR SECTIONS A-A, B-B, C-C, D-D, E-E AND DETAIL 1, SEE SHEET NO. B-11.
4. FOR PAY LIMIT DETAILS, SEE SHEET NO. B-12.
5. FOR PARAPET TRANSITION DETAILS, SEE SHEET NO. B-17.
6. FOR ABUTMENT DEMOLITION PLAN, SEE SHEET NO. B-24.
7. FOR SUBSTRUCTURE REPAIR DETAILS, SEE SHEET NO. B-25.
8. FOR BAR LIST, SEE SHEET NO. B-27.

¼"=1'-0" (4 0 4 8)

REVISION	BY	C'K'D	DATE

BRIDGE NO. 1

NEW JERSEY DEPARTMENT OF TRANSPORTATION
BUREAU OF STRUCTURAL ENGINEERING

EAST ABUTMENT PLAN & ELEVATION I

ROUTE 80 BRIDGES OVER ROUTE 287
NORTHBOUND AND SMITH ROAD
CONTRACT NO. 043003714

DEWBERRY-GOODKIND, INC. COA# 24GA28047600
BRIAN D. JECKER, P.E. 8-24-10 DATE
NEW JERSEY PROFESSIONAL ENGINEER LICENSE. NO. 24GE04088600

BRIDGE SHEET NO. B-9 OF B-58

80 / 129

CONTROL SECTION		JOB NO.	
DES. BY	R. GANDIA	CHK. BY	B. JECKER
DWN. BY	M. NAFIS		

IN CHARGE OF J. SMITH

Dewberry-Goodkind, Inc.
Bloomfield, N.J.

STATE	FEDERAL PROJECT NO.	SHEET	TOTAL SHEETS
N.J.	BR-080-5(094)		

STRUCTURE NO. 1414-168

STRUCTURE NAME
ROUTE I-80 OVER ROUTE I-287
NORTHBOUND AND RAMPS D&H

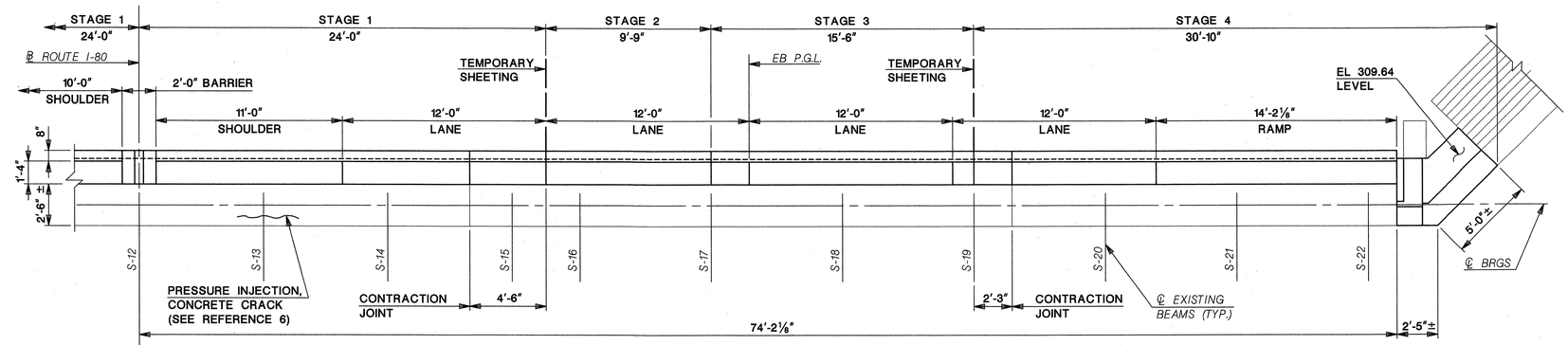

PLAN
SCALE: ¼" = 1'-0"

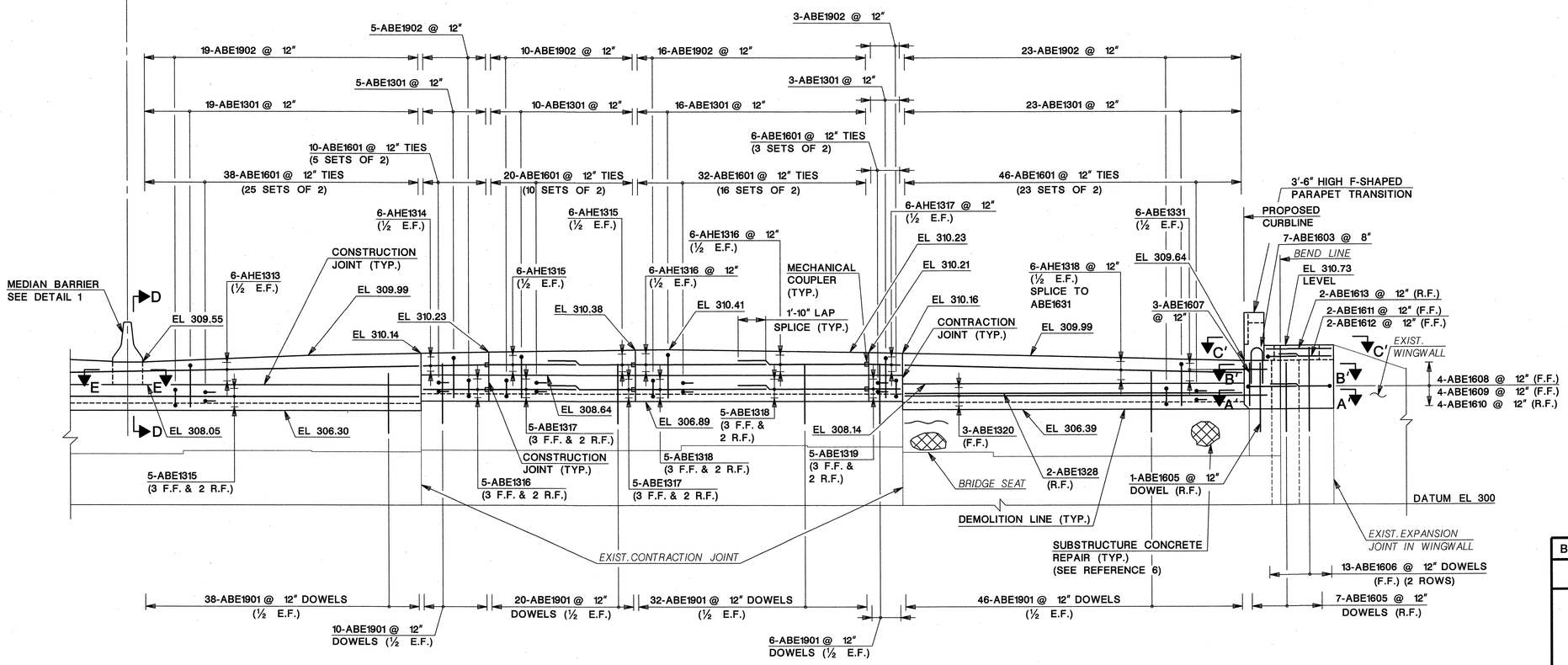

ELEVATION
SCALE: ¼" = 1'-0"

NOTES:
1. FOR ABUTMENT NOTES, SEE SHEET NO. B-8.

REFERENCES:
1. FOR TYPICAL BACKWALL SECTION, SEE SHEET NO. B-7.
2. FOR SECTIONS A'-A', B'-B', C'-C', D-D, E-E AND DETAIL 1, SEE SHEET NO. B-11.
3. FOR PAY LIMIT DETAILS, SEE SHEET NO. B-12.
4. FOR PARAPET TRANSITION DETAILS, SEE SHEET NO. B-17.
5. FOR ABUTMENT DEMOLITION PLAN, SEE SHEET NO. B-24.
6. FOR SUBSTRUCTURE REPAIR DETAILS, SEE SHEET NO. B-25.
7. FOR BAR LIST, SEE SHEET NO. B-27.

LEGEND:
F.F. - FRONT FACE
R.F. - REAR FACE
E.F. - EACH FACE
- CRACK
- SPALLED AREA

¼"=1'-0" 4 0 4 8

REVISION	BY	C'K'D	DATE

BRIDGE NO. 1

NEW JERSEY DEPARTMENT OF TRANSPORTATION
BUREAU OF STRUCTURAL ENGINEERING

EAST ABUTMENT PLAN & ELEVATION II

ROUTE 80 BRIDGES OVER ROUTE 287
NORTHBOUND AND SMITH ROAD
CONTRACT NO. 043003714

DEWBERRY-GOODKIND, INC. COA# 24GA28047600

BRIAN D. JECKER, P.E. DATE 8-24-10
NEW JERSEY PROFESSIONAL ENGINEER LICENSE. NO. 24GE04088600

BRIDGE SHEET NO. B-10 OF B-58

81 / 129

CONTROL SECTION		JOB NO.	
DES. BY	R. GANDIA	CHK. BY	B. JECKER
DWN. BY	M. NAFIS		

IN CHARGE OF J. SMITH

Dewberry-Goodkind, Inc.
Bloomfield, N.J.

bjecker 8/19/2010 2:06:11 PM OceTDS700-BW.plt 30-Scale 3056-REDECKING-Route80-287-NB\3056\redecking\cad\struct\bridge1\BR1-EABUTP&EL-2.dgn

STATE	FEDERAL PROJECT NO.	SHEET	TOTAL SHEETS
N.J.	BR-080-5(094)		

STRUCTURE NO. 1414-168

STRUCTURE NAME
ROUTE I-80 OVER ROUTE I-287
NORTHBOUND AND RAMPS D&H

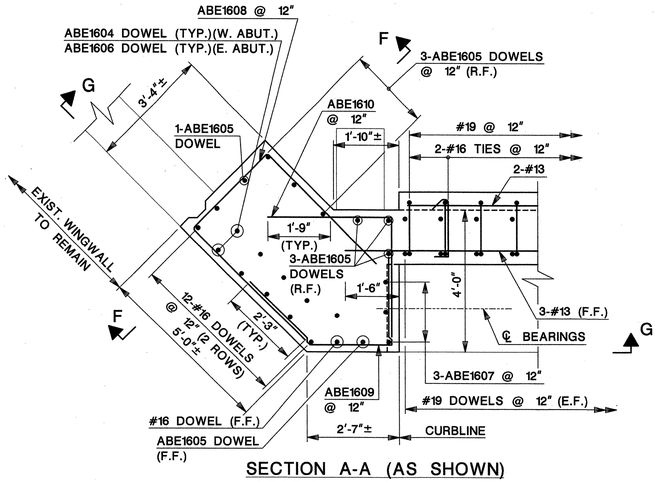

SECTION A-A (AS SHOWN)
SECTION A'-A' (OPPOSITE)
SCALE: ½" = 1'-0"

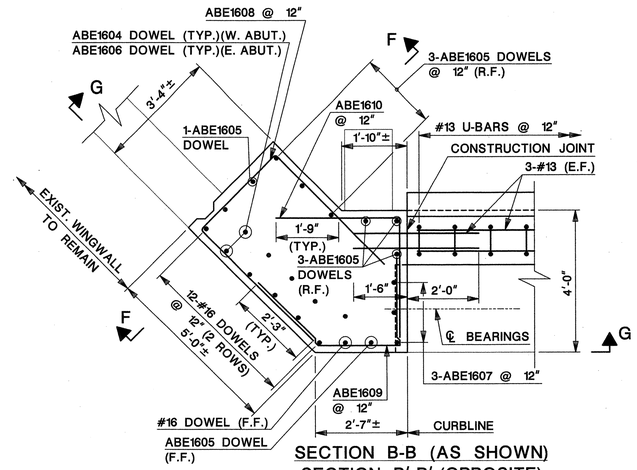

SECTION B-B (AS SHOWN)
SECTION B'-B' (OPPOSITE)
SCALE: ½" = 1'-0"

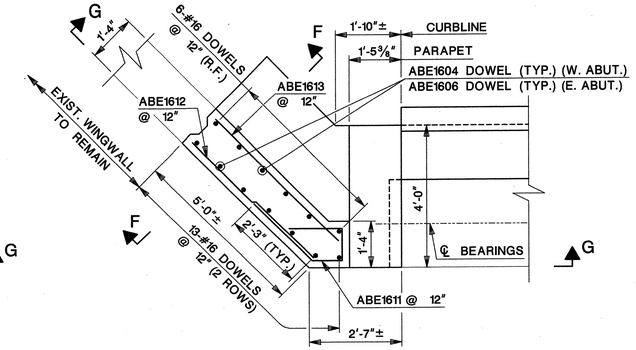

SECTION C-C (AS SHOWN)
SECTION C'-C' (OPPOSITE)
SCALE: ½" = 1'-0"

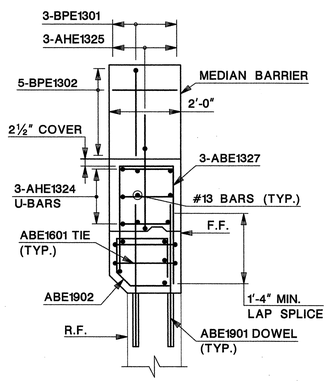

SECTION D-D
SCALE: ½"=1'-0"

NOTE: FOR INFORMATION NOT SHOWN, SEE TYPICAL BACKWALL SECTION

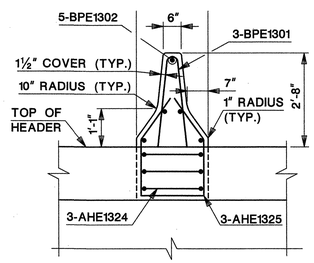

DETAIL 1

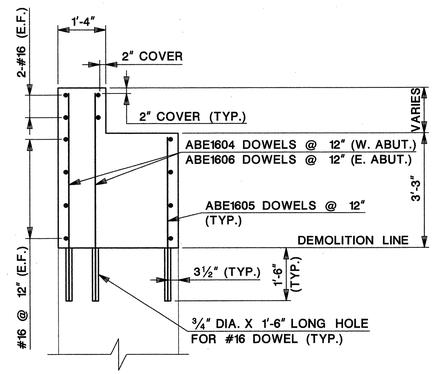

SECTION F-F
SCALE: ½" = 1'-0"

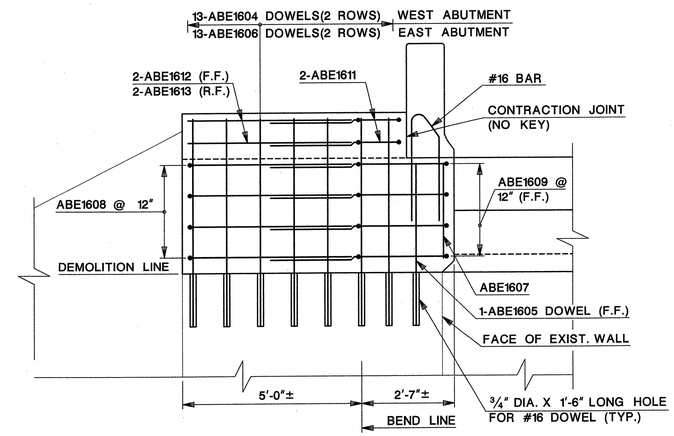

SECTION G-G
SCALE: ½" = 1'-0"

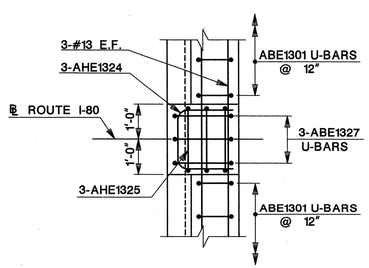

SECTION E-E
SCALE: ½"=1'-0"

NOTES:
1. FOR ABUTMENT NOTES, SEE SHEET NO. B-8.

REFERENCE:
1. FOR PARAPET REINFORCEMENT, SEE SHEET NO. B-17.

½"=1'-0" 1 6" 0 2 4

REVISION	BY	C'K'D	DATE

BRIDGE NO. 1

NEW JERSEY DEPARTMENT OF TRANSPORTATION
BUREAU OF STRUCTURAL ENGINEERING

ABUTMENT SECTIONS

ROUTE 80 BRIDGES OVER ROUTE 287
NORTHBOUND AND SMITH ROAD
CONTRACT NO. 043003714

DEWBERRY-GOODKIND, INC. COA# 24GA28047600
BRIAN D. JECKER, P.E. 8-24-10 DATE
NEW JERSEY PROFESSIONAL ENGINEER LICENSE. NO. 24GE04088600

BRIDGE SHEET NO. B-11 OF B-58

82 / 129

CONTROL SECTION		JOB NO.	
DES. BY	R. GANDIA	CHK. BY	B. JECKER
DWN. BY	M. NAFIS		

IN CHARGE OF J. SMITH

Dewberry-Goodkind, Inc.
Bloomfield, N.J.

STATE	FEDERAL PROJECT NO.	SHEET	TOTAL SHEETS
N.J.	BR-080-5(094)		

STRUCTURE NO. 1414-168

STRUCTURE NAME
ROUTE I-80 OVER ROUTE I-287
NORTHBOUND AND RAMPS D&H

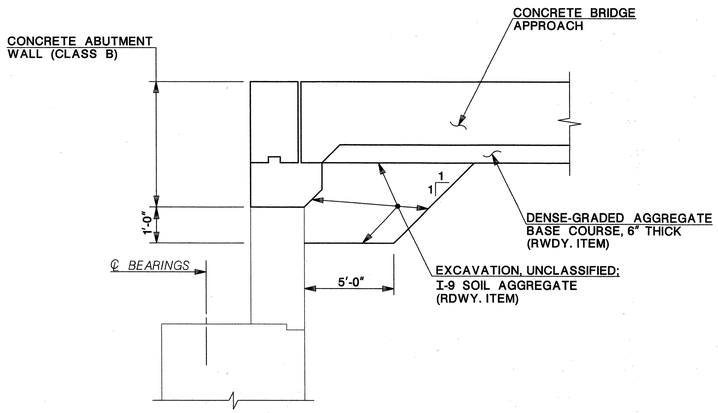

ABUTMENT PAY LIMITS
(EAST ABUTMENT SHOWN, WEST ABUTMENT SIMILAR)
NOT TO SCALE

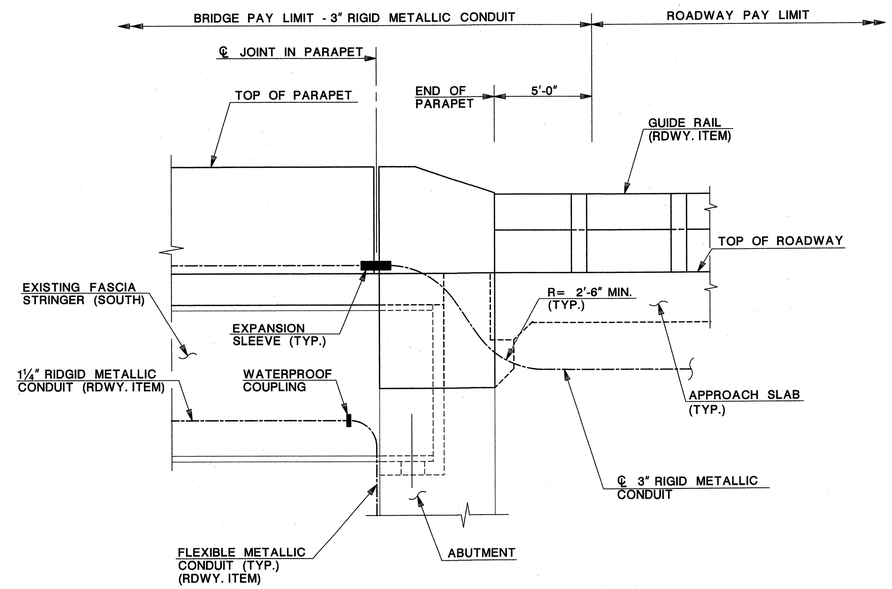

RIGID METALLIC CONDUIT PAY LIMIT DETAIL
NOT TO SCALE

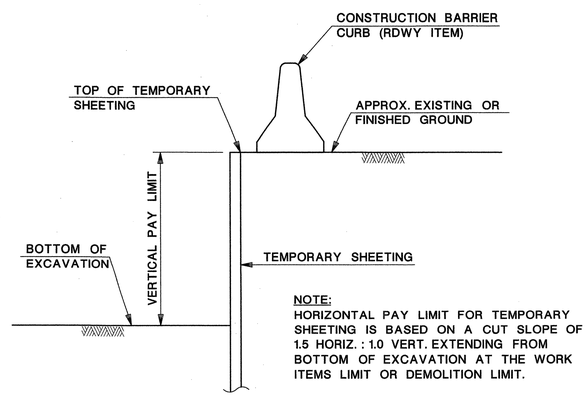

NOTE:
HORIZONTAL PAY LIMIT FOR TEMPORARY SHEETING IS BASED ON A CUT SLOPE OF 1.5 HORIZ. : 1.0 VERT. EXTENDING FROM BOTTOM OF EXCAVATION AT THE WORK ITEMS LIMIT OR DEMOLITION LIMIT.

TEMPORARY SHEETING PAY LIMIT
NOT TO SCALE

CONTROL SECTION		JOB NO.	
DES. BY	R. GANDIA	CHK. BY	B. JECKER
DWN. BY	A.BETANCOURT		

IN CHARGE OF J. SMITH

REVISION	BY	C'K'D	DATE

BRIDGE NO. 1

NEW JERSEY DEPARTMENT OF TRANSPORTATION
BUREAU OF STRUCTURAL ENGINEERING

SUBSTRUCTURE PAY LIMITS AND DETAILS

ROUTE 80 BRIDGES OVER ROUTE 287
NORTHBOUND AND SMITH ROAD
CONTRACT NO. 043003714

DEWBERRY-GOODKIND, INC. COA# 24GA28047600

BRIAN D. JECKER, P.E. DATE 8-24-10
NEW JERSEY PROFESSIONAL ENGINEER LICENSE. NO. 24GE04088600

BRIDGE SHEET NO. B-12 OF B-58

83
129

Dewberry-Goodkind, Inc.
Bloomfield, N.J.

STATE	FEDERAL PROJECT NO.	SHEET	TOTAL SHEETS
N.J.	BR-080-5(094)		

STRUCTURE NO. 1414-168

STRUCTURE NAME
ROUTE I-80 OVER ROUTE I-287
NORTHBOUND AND RAMPS D&H

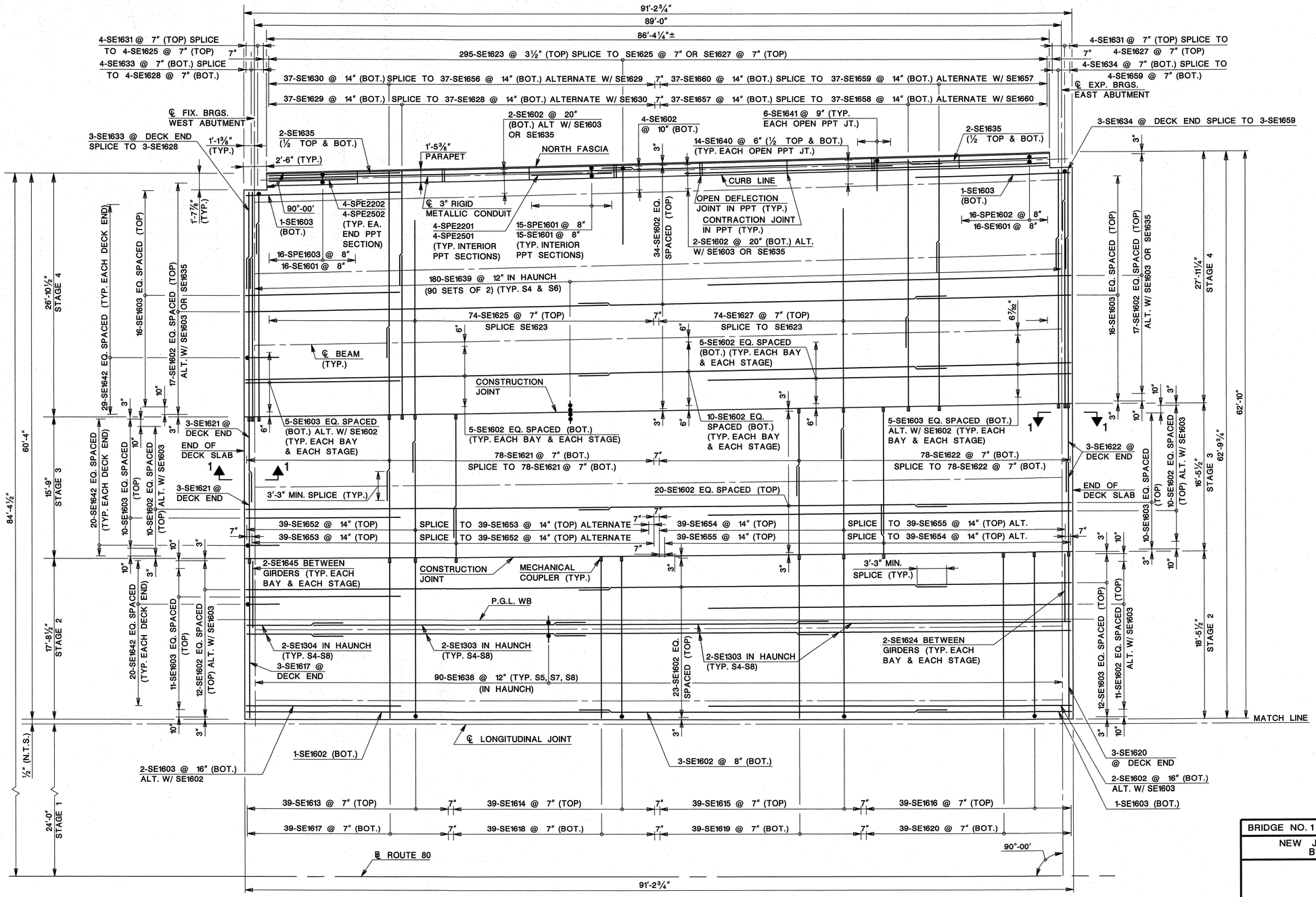

DECK PLAN
SCALE: 3/16"=1'-0"

3/16"=1'-0" 1 0 5 10

LEGEND:
PPT - PARAPET
JT - JOINT

NOTES:
1. EPOXY COAT ALL REINFORCEMENT STEEL.
2. THE USE OF MECHANICAL REINFORCEMENT COUPLERS ARE REQUIRED AT STAGE LINE CONSTRUCTION JOINTS AS SHOWN. COUPLERS SHALL CONFORM TO SUBSECTION 905.04. INCLUDE THE COST OF THE COUPLERS IN THE ITEM "REINFORCEMENT STEEL, EPOXY COATED".
3. SEAL SURFACE CRACKS IN THE DECK SLAB WHICH DO NOT EXCEED ⅜INCH IN DEPTH WITH A LOW VISCOSITY EPOXY SEALER OR A LOW VISCOSITY METHACRYLATE MONOMER PENETRATING SEALER THAT IS APPROVED BY THE RE. CRACKS EXCEEDING ⅜INCH IN DEPTH WILL BE REPAIRED BY METHODS THAT ARE APPROVED BY THE RE. ALL SUCH CORRECTIVE WORK SHALL BE AT THE CONTRACTORS EXPENSE.

REFERENCES:
1. FOR DECK PLAN II, TABLE OF QUANTITIES, AND SECTION 1-1, SEE SHEET NO. B-14.
2. FOR DECK PLAN III, SEE SHEET NO. B-15.
3. FOR DECK SECTION, SEE SHEET NO. B-16.
4. FOR PARAPET DETAILS, SEE SHEET NO. B-17.
5. FOR FINISHED SLAB ELEVATIONS AND PARAPET JOINT SPACING, SEE SHEET NO. B-18.
6. FOR BAR LIST, SEE SHEET NO. B-28.

BRIDGE NO. 1

NEW JERSEY DEPARTMENT OF TRANSPORTATION
BUREAU OF STRUCTURAL ENGINEERING

DECK PLAN I

ROUTE 80 BRIDGES OVER ROUTE 287
NORTHBOUND AND SMITH ROAD
CONTRACT NO. 043003714

DEWBERRY-GOODKIND, INC. COA# 24GA28047600

BRIAN D. JECKER, P.E. 8-24-10 DATE
NEW JERSEY PROFESSIONAL ENGINEER LICENSE NO. 24GE04088600

BRIDGE SHEET NO. B-13 OF B-58

84 / 129

REVISION	BY	C'K'D	DATE

CONTROL SECTION		JOB NO.	
DES. BY	J. SMITH	CHK. BY	W. LANG
DWN. BY	M. NAFIS		

IN CHARGE OF J. SMITH

Dewberry-Goodkind, Inc.
Bloomfield, N.J.

bjecker 8/23/2010 8:06:17 AM OceTDS700-BW.plt 30-Scale 3056-REDECKING-Route80-287-GB,3056\REDECKING\CAD\Struct\Bridge1\BR1-DECKPLAN-1.dgn

STATE	FEDERAL PROJECT NO.	SHEET	TOTAL SHEETS
N.J.	BR-080-5(094)		

STRUCTURE NO. 1414-168

STRUCTURE NAME
ROUTE I-80 OVER ROUTE I-287
NORTHBOUND AND RAMPS D&H

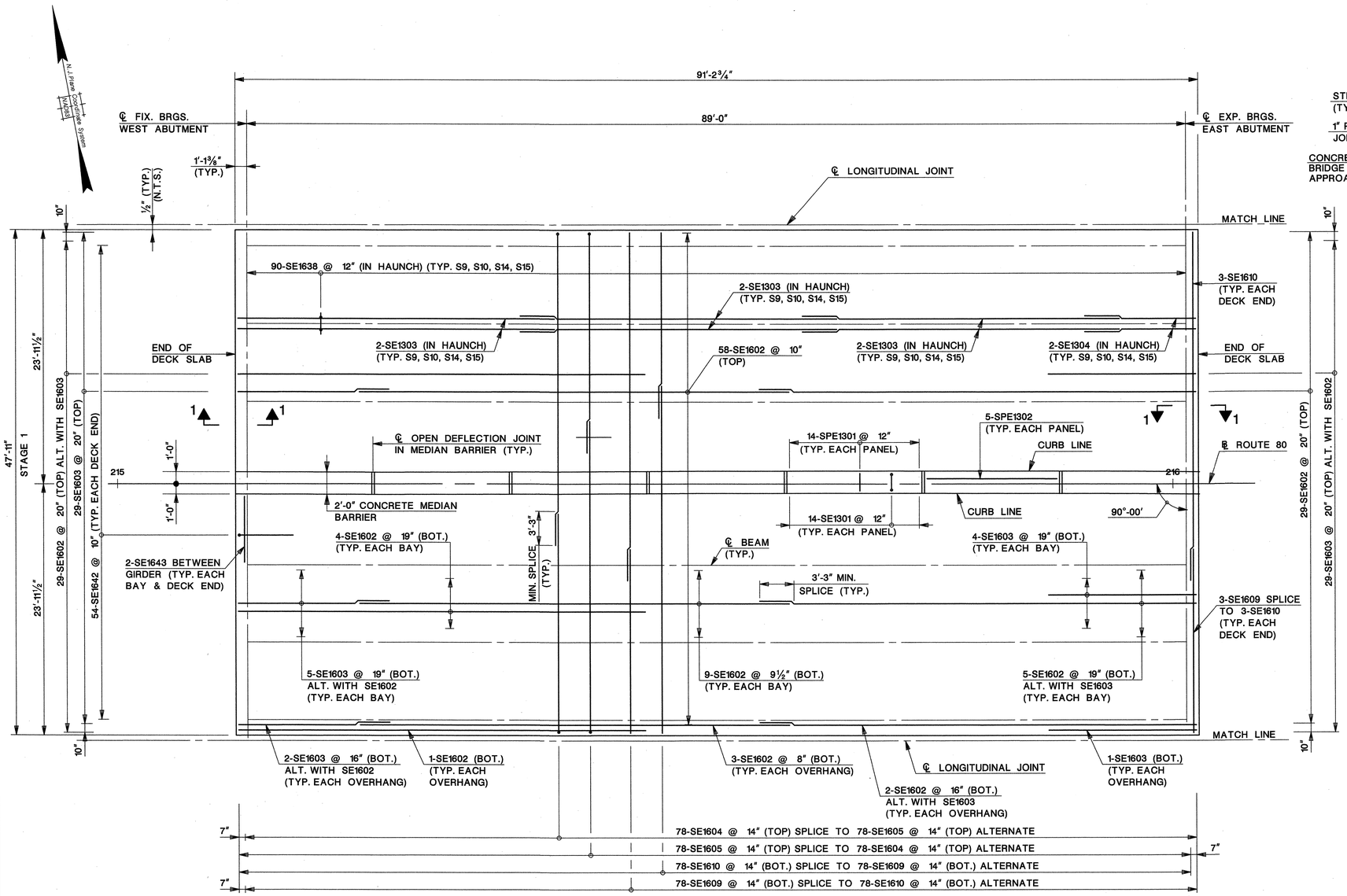

DECK PLAN
SCALE: 3/16"=1'-0"

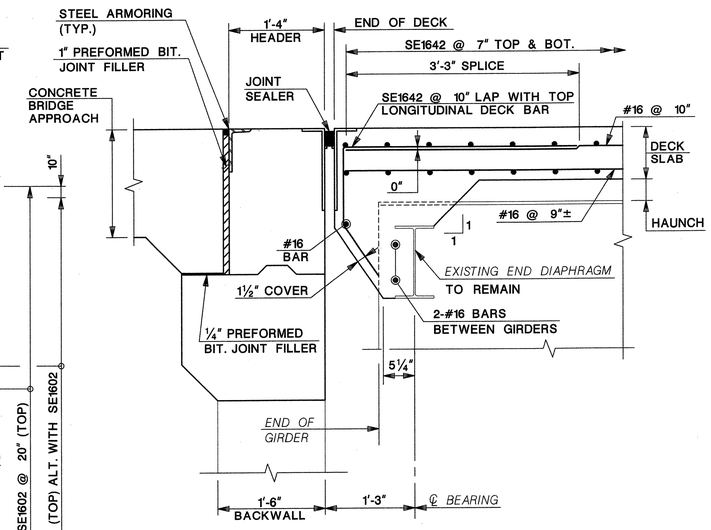

SECTION 1-1
SCALE: 1" = 1'-0"

NOTES:
1. SPACE REINFORCING TO CLEAR STUDS AND SUPPORTS FOR ARMORING ANGLES.
2. FOR DECK ADDITIONAL NOTES, SEE SHEET NO. B-13.

REFERENCES:
1. FOR JOINT DETAILS, SEE SHEET NOS. B-19 AND B-20.
2. FOR MEDIAN BARRIER JOINT SPACING, SEE SHEET NO. B-18.
3. FOR ADDITIONAL DECK REFERENCES, SEE SHEET NO. B-13.

QUANTITIES

ITEM NO.	DESCRIPTION	UNIT	CONTRACT QUANTITY
504006P	REINFORCEMENT STEEL, EPOXY COATED	LBS.	122,644
506012P	SHEAR CONNECTOR	UNIT	3,250
507006P	2½" X 2½" PREFORMED ELASTOMERIC JOINT ASSEMBLY	L.F.	325
507024P	CONCRETE BRIDGE DECK, HPC	C.Y.	470
507039P	CONCRETE BRIDGE PARAPET, HPC	L.F.	173
507048M	24" BY 32" CONCRETE BARRIER CURB, BRIDGE	L.F.	92
701021P	3" RIGID METALLIC CONDUIT	L.F.	173

CONTROL SECTION		JOB NO.	
DES. BY	J. SMITH	CHK. BY	W. LANG
DWN. BY	M. NAFIS		
IN CHARGE OF	J. SMITH		

1"=1'-0" 1 6" 0 1 2

3/16"=1'-0" 1 0 5 10

REVISION	BY	C'K'D	DATE

BRIDGE NO. 1

NEW JERSEY DEPARTMENT OF TRANSPORTATION
BUREAU OF STRUCTURAL ENGINEERING

DECK PLAN II

ROUTE 80 BRIDGES OVER ROUTE 287
NORTHBOUND AND SMITH ROAD
CONTRACT NO. 043003714

DEWBERRY-GOODKIND, INC. COA# 24GA28047600
BRIAN D. JECKER, P.E. DATE 8-24-10
NEW JERSEY PROFESSIONAL ENGINEER LICENSE. NO. 24GE04088600

BRIDGE SHEET NO. B-14 OF B-58

85
129

Dewberry-Goodkind, Inc.
Bloomfield, N.J.

bjecker 8/19/2010 2:06:25 PM OceTDS700-BW.plt 30-Scale 3056-REDECKING-Route80-287-9B,3056\Redecking\CAD\Struct\Bridge1\BR1-DECKPLAN-2.dgn

STATE	FEDERAL PROJECT NO.	SHEET	TOTAL SHEETS
N.J.	BR-080-5(094)		

STRUCTURE NO. 1414-168

STRUCTURE NAME
ROUTE I-80 OVER ROUTE I-287
NORTHBOUND AND RAMPS D&H

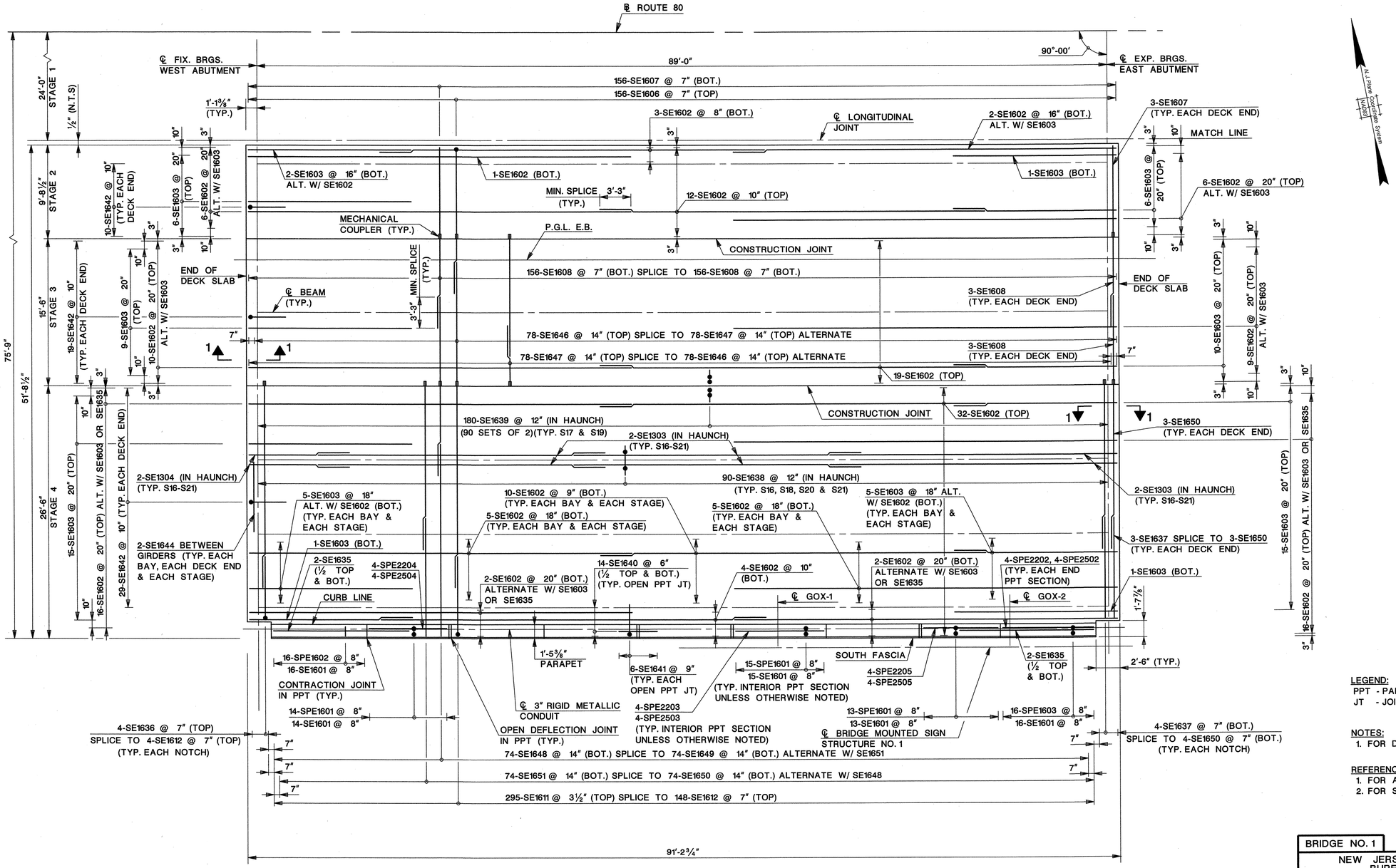

DECK PLAN

SCALE: 3/16"=1'-0"

LEGEND:
PPT - PARAPET
JT - JOINT

NOTES:
1. FOR DECK NOTES, SEE SHEET NO. B-13.

REFERENCES:
1. FOR ADDITIONAL DECK REFERENCES, SEE SHEET NO. B-13.
2. FOR SECTION 1-1, SEE SHEET NO. B-14.

CONTROL SECTION		JOB NO.	
DES. BY	J. SMITH	CHK. BY	W. LANG
DWN. BY	M. NAFIS		

IN CHARGE OF J. SMITH

3/16"=1'-0" 1 0 5 10

REVISION	BY	C'K'D	DATE

BRIDGE NO. 1

NEW JERSEY DEPARTMENT OF TRANSPORTATION
BUREAU OF STRUCTURAL ENGINEERING

DECK PLAN III

ROUTE 80 BRIDGES OVER ROUTE 287
NORTHBOUND AND SMITH ROAD
CONTRACT NO. 043003714

DEWBERRY-GOODKIND, INC. COA# 24GA28047600

BRIAN D. JECKER, P.E. 8-24-10 DATE
NEW JERSEY PROFESSIONAL ENGINEER LICENSE. NO. 24GE04088600

BRIDGE SHEET NO. B-15 OF B-58

86
129

Dewberry-Goodkind, Inc.
Bloomfield, N.J.

bjecker 8/19/2010 2:06:28 PM OceTDS700-BW.plt 30-Scale 3056-REDECKING-Route80-287-9(3056)\Redecking\CAD\Struct\Bridge1\BR1-DECKPLAN-3.dgn

STATE	FEDERAL PROJECT NO.	SHEET	TOTAL SHEETS
N.J.	BR-080-5(094)		

STRUCTURE NO. 1414-168

STRUCTURE NAME
ROUTE I-80 OVER ROUTE I-287
NORTHBOUND AND RAMPS D&H

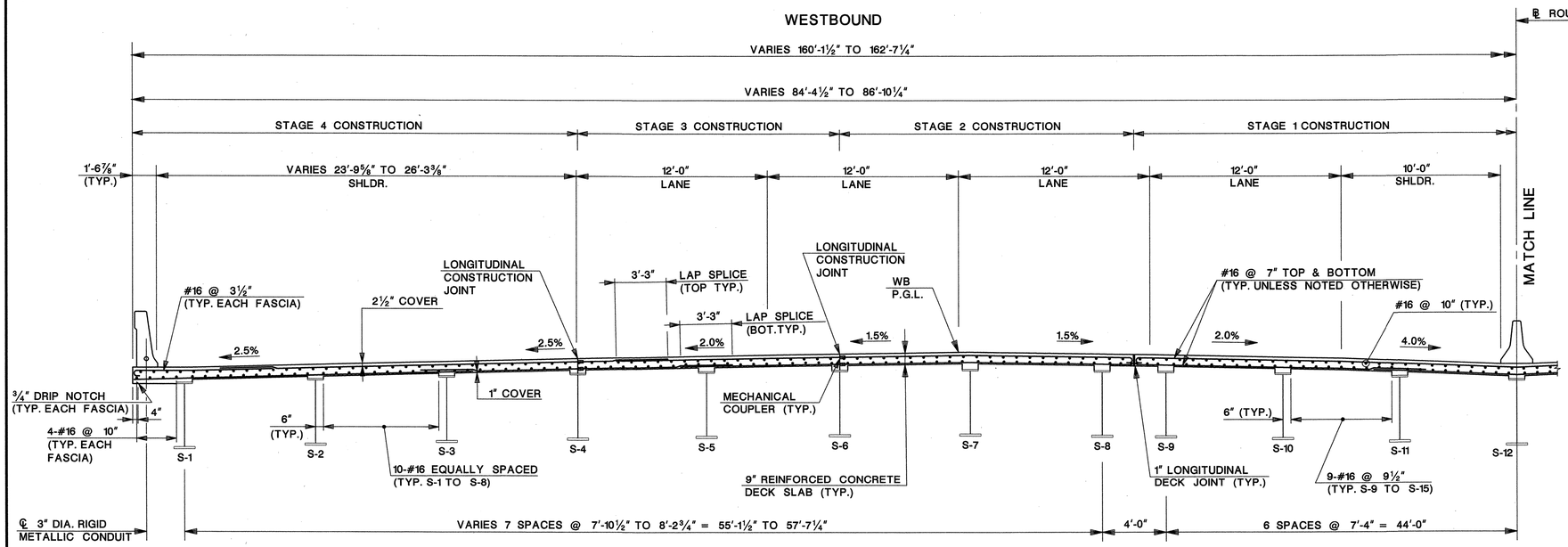

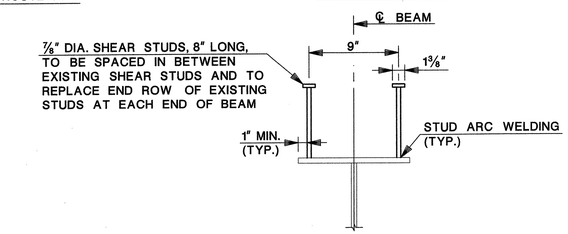

FOR BEAMS S-4 TO S-10, S-14, S-15, S-17 TO S-21

SHEAR STUD DETAIL

SCALE: N.T.S.

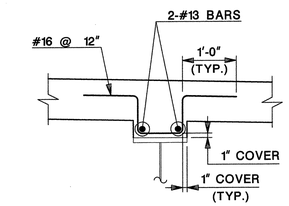

FOR BEAMS S-5, S-7 TO S-10, S-14, S-15, S-18, S-20 AND S-21

TYPICAL CONCRETE HAUNCH REINFORCEMENT

SCALE: N.T.S.

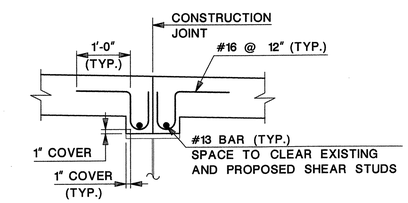

FOR BEAMS S-4, S-6, S-17 AND S-19

CONCRETE HAUNCH REINFORCEMENT AT CONSTRUCTION JOINT

SCALE: N.T.S.

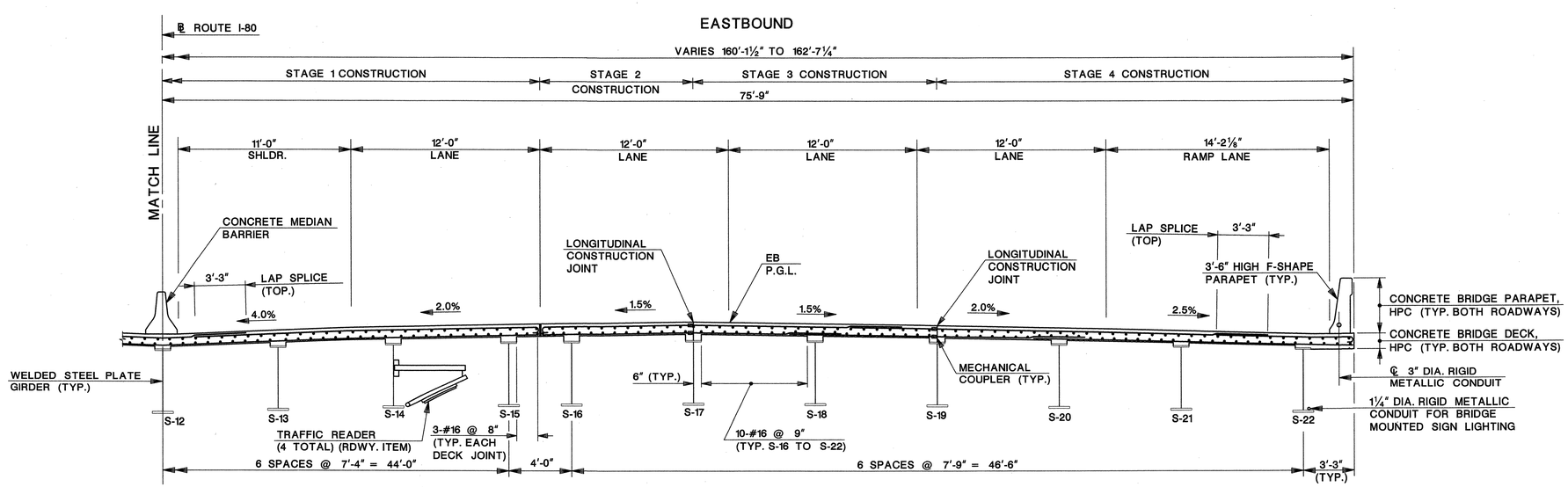

TYPICAL SECTION (LOOKING EAST)

SCALE: ¼" = 1'-0"

¼"=1'-0"

NOTES:

1. EPOXY COAT ALL REINFORCEMENT STEEL.
2. PROPOSED BRIDGE MOUNTED SIGN STRUCTURE NOT SHOWN.
3. USE MECHANICAL COUPLERS AT STAGE LINE CONSTRUCTION JOINTS AS SHOWN. COUPLERS SHALL CONFORM TO SUBSECTION 905.04. INCLUDE THE COST OF THE COUPLERS IN THE ITEM "REINFORCEMENT STEEL, EPOXY COATED".

REFERENCES:

1. FOR PARAPET REINFORCEMENT DETAILS, SEE SHEET NO. B-17.
2. FOR MEDIAN BARRIER REINFORCEMENT DETAILS, SEE STANDARD BRIDGE CONSTRUCTION DETAIL BCD-507-9.

BRIDGE NO. 1

NEW JERSEY DEPARTMENT OF TRANSPORTATION
BUREAU OF STRUCTURAL ENGINEERING

DECK SECTION

ROUTE 80 BRIDGES OVER ROUTE 287
NORTHBOUND AND SMITH ROAD
CONTRACT NO. 043003714

CONTROL SECTION		JOB NO.	
DES. BY	P. HULYALKAR	CHK. BY	W. LANG
DWN. BY	M. NAFIS		

IN CHARGE OF J. SMITH

REVISION	BY	C'K'D	DATE

DEWBERRY-GOODKIND, INC. COA# 24GA28047600

BRIAN D. JECKER, P.E. DATE 8-21-10
NEW JERSEY PROFESSIONAL ENGINEER LICENSE. NO. 24GE04088600

BRIDGE SHEET NO. B-16 OF B-58

87/129

Dewberry-Goodkind, Inc.
Bloomfield, N.J.

bjecker 8/19/2010 2:06:32 PM OceTDS700-BW.plt 30-Scale 3056-REDECKING-Route80-287-Rt3,3056\Redecking\CAD\Struct\Bridge1\BR1-DECKSECT.dgn

STATE	FEDERAL PROJECT NO.	SHEET	TOTAL SHEETS
N.J.	BR-080-5(094)		

STRUCTURE NO. 1414-168

STRUCTURE NAME
ROUTE I-80 OVER ROUTE I-287
NORTHBOUND AND RAMPS D&H

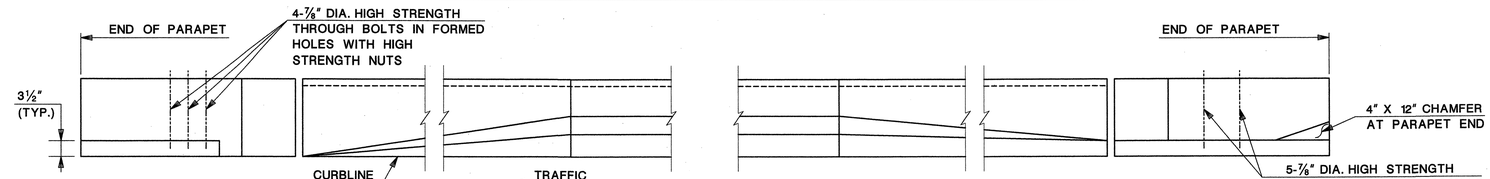

NORTH PARAPET PLAN
SCALE: ¾"=1'-0"

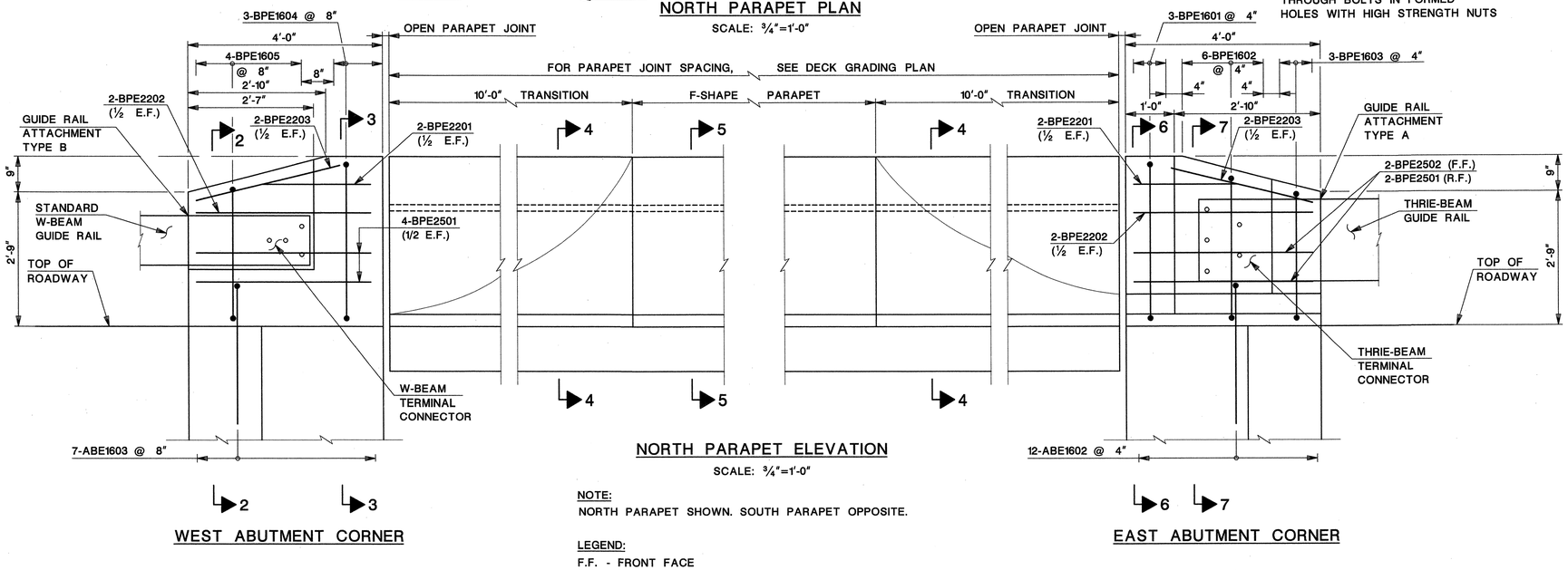

NORTH PARAPET ELEVATION
SCALE: ¾"=1'-0"

WEST ABUTMENT CORNER

EAST ABUTMENT CORNER

NOTE:
NORTH PARAPET SHOWN. SOUTH PARAPET OPPOSITE.

LEGEND:
F.F. - FRONT FACE
R.F. - REAR FACE
E.F. - EACH FACE

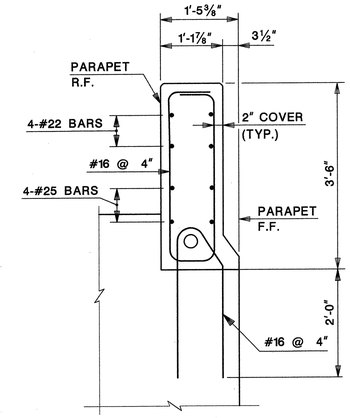

SECTION 6-6
SCALE: ¾"=1'-0"

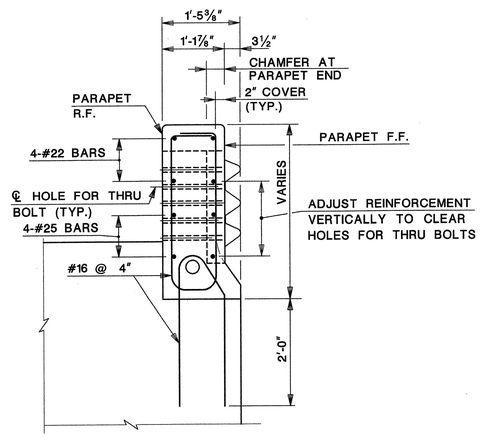

SECTION 7-7
SCALE: ¾"=1'-0"

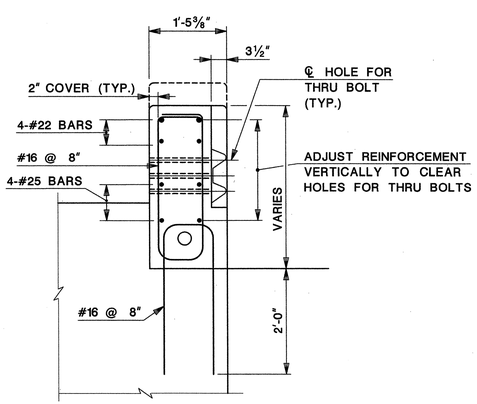

SECTION 2-2
SCALE: ¾"=1'-0"

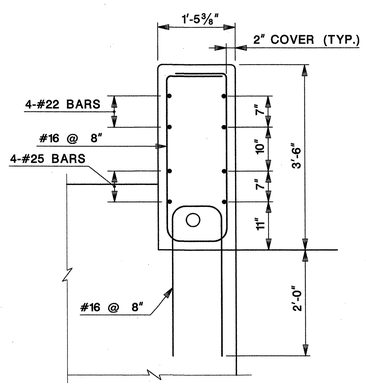

SECTION 3-3
SCALE: ¾"=1'-0"

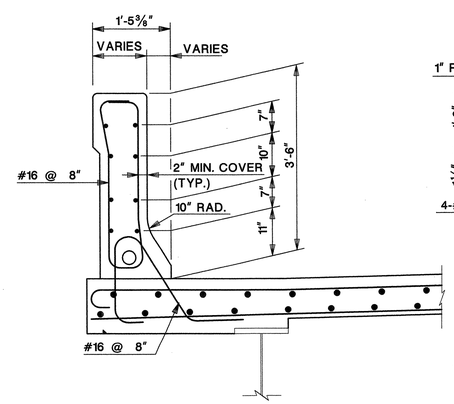

SECTION 4-4
SCALE: ¾"=1'-0"

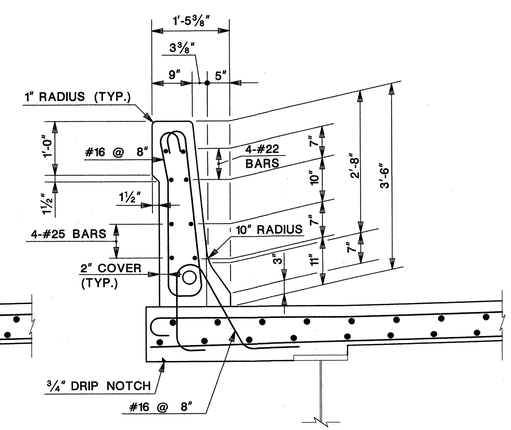

SECTION 5-5
SCALE: ¾"=1'-0"

REFERENCES:
1. FOR ADDITIONAL BEAM GUIDE RAIL DETAILS, SEE STANDARD ROADWAY CONSTRUCTION DETAILS CD609-12 AND CD609-13.
2. FOR ADDITIONAL PARAPET DETAILS, SEE STANDARD BRIDGE CONSTRUCTION DETAIL BCD-507-8.

BRIDGE NO. 1

NEW JERSEY DEPARTMENT OF TRANSPORTATION
BUREAU OF STRUCTURAL ENGINEERING

PARAPET DETAILS

ROUTE 80 BRIDGES OVER ROUTE 287
NORTHBOUND AND SMITH ROAD
CONTRACT NO. 043003714

DEWBERRY-GOODKIND, INC. COA# 24GA28047600
BRIAN D. JECKER, P.E. DATE 8-24-10
NEW JERSEY PROFESSIONAL ENGINEER LICENSE. NO. 24GE04088600

BRIDGE SHEET NO. B-17 OF B-58

88
129

REVISION	BY	C'K'D	DATE

¾"=1'-0" 1 6" 0 1 2 3

CONTROL SECTION		JOB NO.	
DES. BY	T. STRNAD	CHK. BY	B. JECKER
DWN. BY	M. NAFIS		

IN CHARGE OF J. SMITH

Dewberry-Goodkind, Inc.
Bloomfield, N.J.

bjecker 8/19/2010 2:06:35 PM OceTDS700-BW.plt 30-Scale 3056-REDECKING-Route80-287-Q8,3056\Redecking\CAD\Struct\Bridge1\BR1-PARAPETSECT.dgn

STATE	FEDERAL PROJECT NO.	SHEET	TOTAL SHEETS
N.J.	BR-080-5(094)		

STRUCTURE NO. 1414-168

STRUCTURE NAME
ROUTE I-80 OVER ROUTE I-287
NORTHBOUND AND RAMPS D&H

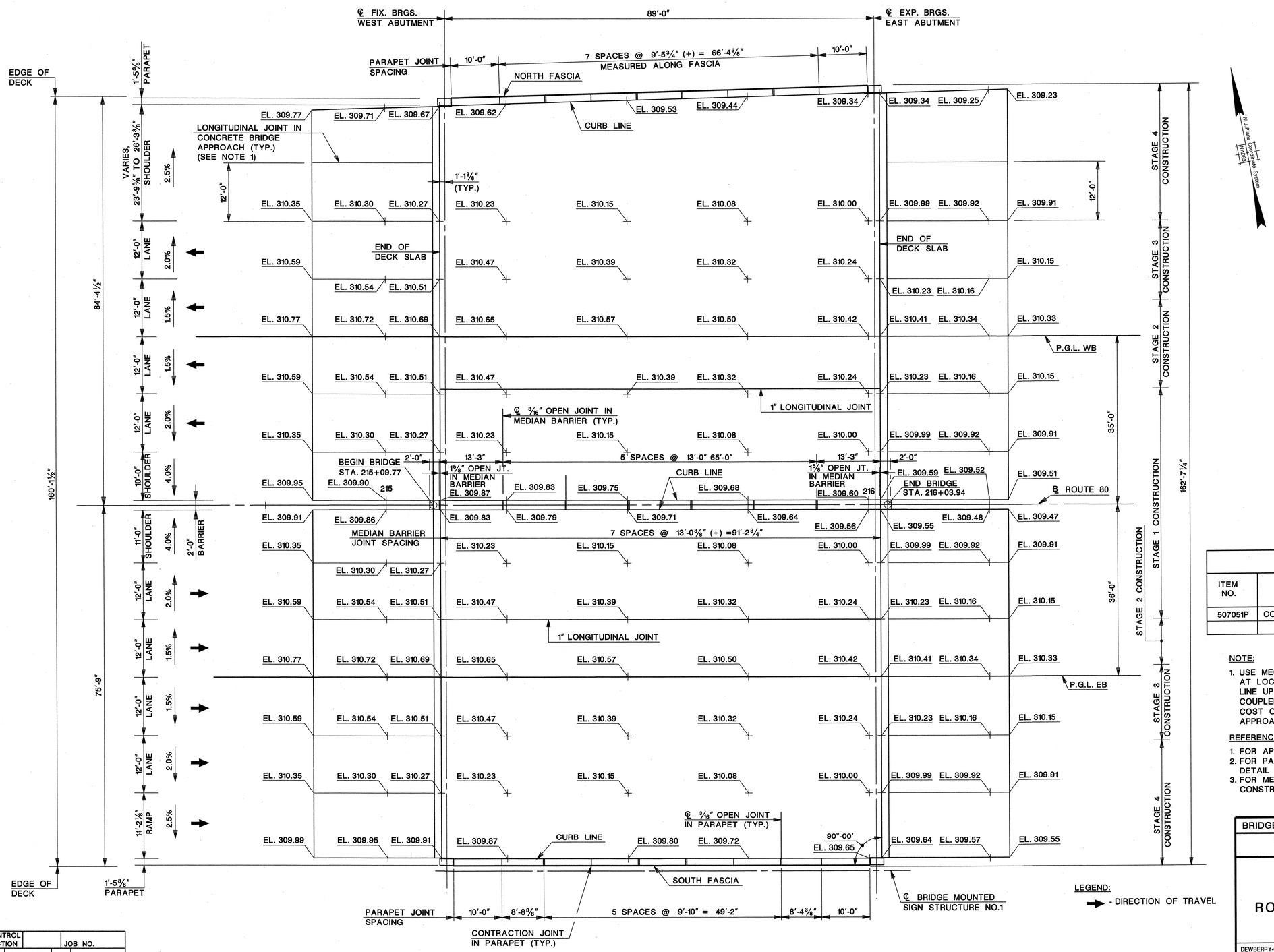

LEGEND:
→ - DIRECTION OF TRAVEL

QUANTITIES

ITEM NO.	DESCRIPTION	UNIT	CONTRACT QUANTITY
507051P	CONCRETE BRIDGE APPROACH	C.Y.	445

NOTE:

1. USE MECHANICAL COUPLERS IN THE CONCRETE BRIDGE APPROACH AT LOCATIONS WHERE THE LONGITUDINAL JOINT SHOWN DOES NOT LINE UP WITH THE CONSTRUCTION JOINT AT THE STAGE LINE. COUPLERS SHALL CONFORM TO SUBSECTION 905.04. INCLUDE THE COST OF THE MECHNICAL COUPLERS IN THE ITEM "CONCRETE BRIDGE APPROACH".

REFERENCES:

1. FOR APPROACH SLAB DETAILS, SEE SHEET NO. B-55.
2. FOR PARAPET JOINT DETAILS, SEE STANDARD BRIDGE CONSTRUCTION DETAIL BCD-507-8.
3. FOR MEDIAN BARRIER JOINT DETAILS, SEE STANDARD BRIDGE CONSTRUCTION DETAIL BCD-507-9.

DECK AND APPROACH SLAB GRADING PLAN
SCALE: 1"=10'-0"

1"=10' 10 0 10 20

BRIDGE NO. 1

NEW JERSEY DEPARTMENT OF TRANSPORTATION
BUREAU OF STRUCTURAL ENGINEERING

DECK AND APPROACH SLAB GRADING PLAN

ROUTE 80 BRIDGES OVER ROUTE 287
NORTHBOUND AND SMITH ROAD
CONTRACT NO. 043003714

CONTROL SECTION		JOB NO.	
DES. BY	W. LANG	CHK. BY	R. GANDIA
DWN. BY	A.BETANCOURT		

IN CHARGE OF J. SMITH

REVISION	BY	C'K'D	DATE

DEWBERRY-GOODKIND, INC. COA# 24GA28047600
BRIAN D. JECKER, P.E. DATE 8-24-10
NEW JERSEY PROFESSIONAL ENGINEER LICENSE. NO. 24GE04088600

BRIDGE SHEET NO. B-18 OF B-58

89
129

Dewberry-Goodkind, Inc.
Bloomfield, N.J.

bjecker 8/19/2010 2:06:38 PM OceTDS700-BW.plt 30-Scale 3056-REDECKING-Route80-287-Q8,3056\Redecking\CAD\Struct\Bridge1\BR1-DECKGRADE.dgn

STATE	FEDERAL PROJECT NO.	SHEET	TOTAL SHEETS
N.J.	BR-080-5(094)		

STRUCTURE NO. 1414-168

STRUCTURE NAME
ROUTE I-80 OVER ROUTE I-287
NORTHBOUND AND RAMPS D&H

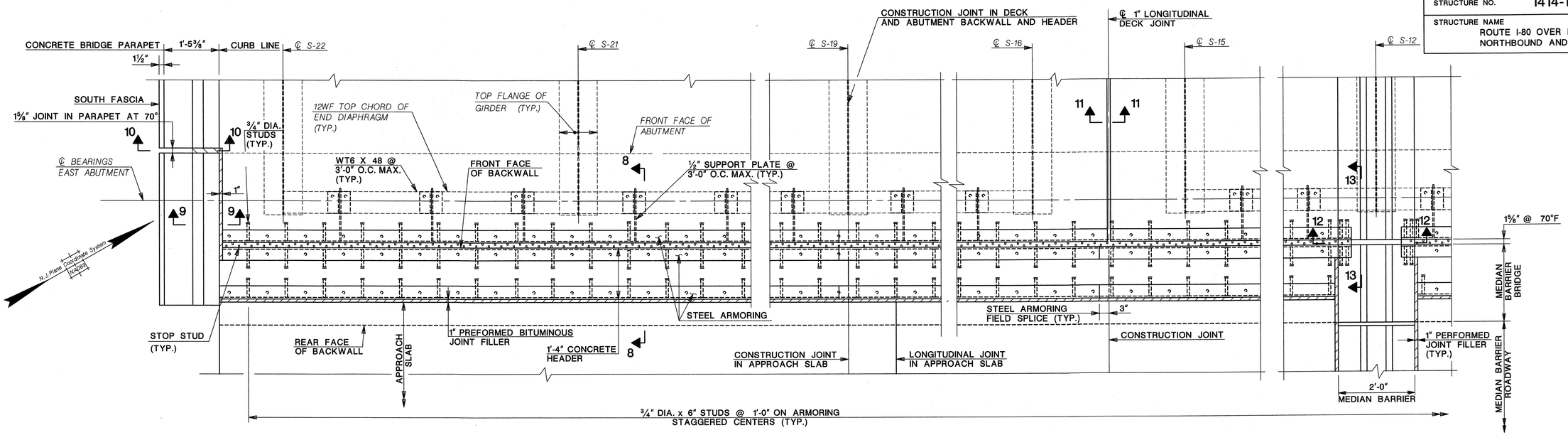

PREFORMED ELASTOMERIC JOINT ASSEMBLY PLAN AT EAST ABUTMENT

(SOUTH SIDE SHOWN, OTHERS SIMILAR)

SCALE: ¾" = 1'-0"

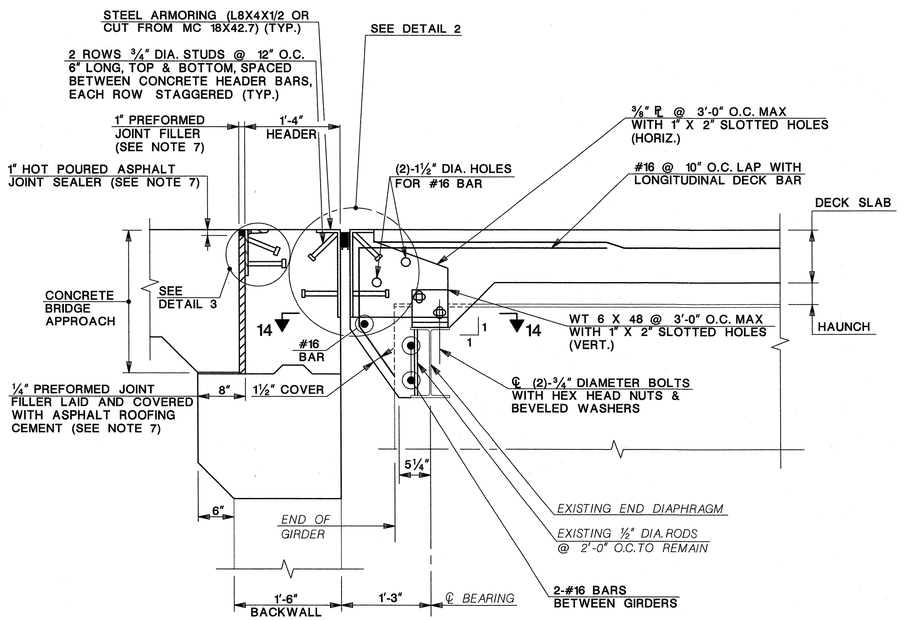

SECTION 8-8

SCALE: 1" = 1'-0"

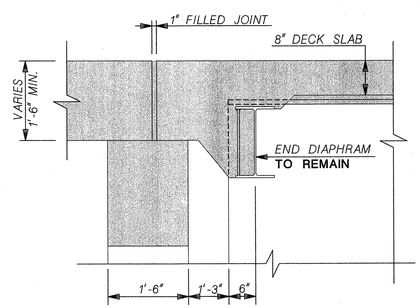

EXISTING FILLED JOINT AT WEST ABUTMENT

SCALE: ¾" = 1'-0"

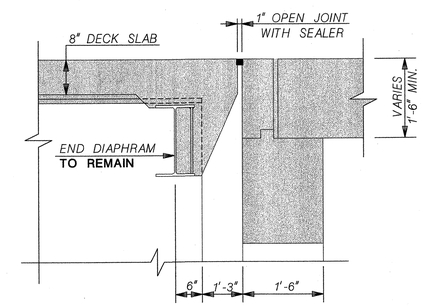

EXISTING OPEN JOINT AT EAST ABUTMENT

SCALE: ¾" = 1'-0"

LEGEND:

- LIMITS OF STRUCTURE REMOVAL

PREFORMED ELASTOMERIC JOINT NOTES:

1. STEEL FOR JOINT ASSEMBLY SHALL BE AASHTO M270 (ASTM A 709).
2. HOT DIP GALVANIZE ALL STRUCTURAL STEEL, INCLUDING ARMORING ON BACK SIDE OF HEADER, AFTER FABRICATION.
3. ALL BOLTS SHALL BE ASTM A325 GALVANIZED HIGH STRENGTH BOLTS.
4. INSTALL AUTOMATIC END WELDED STUDS BEFORE GALVANIZING ASSEMBLY. STEEL AREAS WHERE THE STUDS ARE TO BE WELDED SHALL BE CLEANED OF RUST AND SCALE BY GRINDING.
5. ALL REINFORCEMENT STEEL SHALL BE EPOXY COATED.
6. INCLUDE PAYMENT FOR ALL STEEL COMPONENTS SHOWN, INCLUDING ARMORING ON BACK SIDE OF HEADER, UNDER THE ITEM "2½" BY 2½" PREFORMED ELASTOMERIC JOINT ASSEMBLY".
7. INCLUDE PAYMENT FOR HOT-POURED JOINT FILLER AND PREFORMED JOINT FILLER BETWEEN THE ABUTMENT AND THE CONCRETE APPROACH, UNDER THE ITEM "CONCRETE BRIDGE APPROACH".

REFERENCES:

1. FOR SECTIONS 9-9 THRU 14-14 AND DETAILS 2 AND 3, SEE SHEET NO. B-20.
2. FOR PREFORMED ELASTOMERIC JOINT SEALER DETAIL, SEE STANDARD BRIDGE CONSTRUCTION DETAILS BCD-504-3.5.

CONTROL SECTION		JOB NO.	
DES. BY	R. GANDIA	CHK. BY	B. JECKER
DWN. BY	A.BETANCORT		
IN CHARGE OF	R. GANDIA		

REVISION	BY	C'K'D	DATE

BRIDGE NO. 1

NEW JERSEY DEPARTMENT OF TRANSPORTATION
BUREAU OF STRUCTURAL ENGINEERING

DECK JOINT DETAILS I

ROUTE 80 BRIDGES OVER ROUTE 287
NORTHBOUND AND SMITH ROAD
CONTRACT NO. 043003714

DEWBERRY-GOODKIND, INC. COA# 24GA28047600

BRIAN D. JECKER, P.E. DATE 8-24-10

NEW JERSEY PROFESSIONAL ENGINEER LICENSE. NO. 24GE04088600

BRIDGE SHEET NO. B-19 OF B-58

90 / 129

Dewberry-Goodkind, Inc.
Bloomfield, N.J.

1"=1'-0" 1 6" 0 1 2

¾"=1'-0" 1 6" 0 1 2 3

STATE	FEDERAL PROJECT NO.	SHEET	TOTAL SHEETS
N.J.	BR-080-5(094)		

STRUCTURE NO. 1414-168

STRUCTURE NAME
ROUTE I-80 OVER ROUTE I-287
NORTHBOUND AND RAMPS D&H

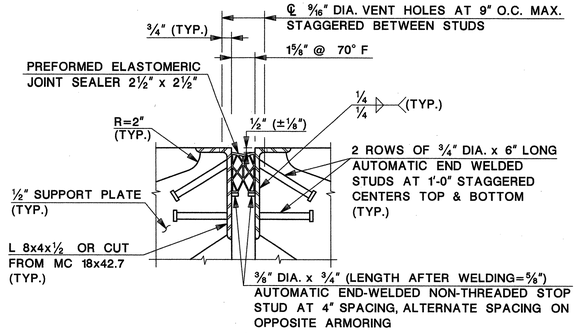

DETAIL 2
SCALE: 1 1/2" = 1'-0"

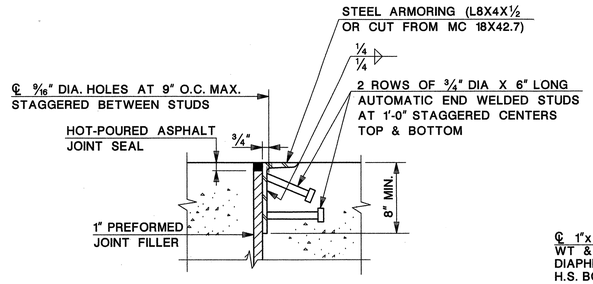

DETAIL 3
SCALE: 1 1/2" = 1'-0"

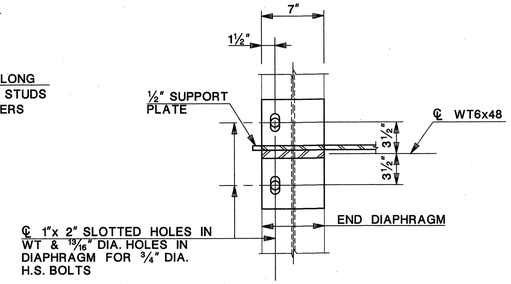

SECTION 14-14
SCALE: 1 1/2" = 1'-0"

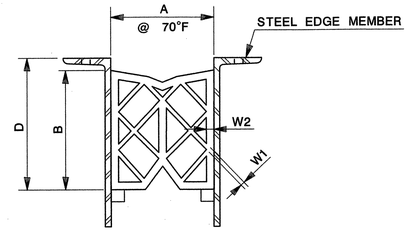

A = COMPRESSED WIDTH OF SEALER AT 70° F.
B = COMPRESSED HEIGHT OF SEALER AT 70° F.
W1 = INTERIOR MEMBRANE MINIMUM THICKNESS.
W2 = EXTERIOR MEMBRANE MINIMUM THICKNESS.

PREFORMED ELASTOMERIC COMPRESSION SEALER	A	B	W1 (MIN.)	W2 (MIN.)
NOMINAL SIZE (IN)	(IN)	(IN)	(IN)	(IN)
2 1/2" X 2 1/2" (NOTE 1)	1 5/8"	(NOTE 2)	3/16"	1/4"

DETAILS OF PREFORMED ELASTOMERIC JOINT SEALER
NOT TO SCALE

PREFORMED ELASTOMERIC JOINT SEALER NOTES:

1. THE NOMINAL HEIGHT OF COMPRESSION SEALS MAY VARY BASED ON MANUFACTURER'S SPECIFICATIONS. THE HEIGHT MAY EXCEED THE NOMINAL MANUFACTURER'S SEALER HEIGHT BY NOT MORE THAN 1/4". THE RATIO OF SEALER HEIGHT TO WIDTH SHALL NOT BE LESS THAN 0.9.
2. DIMENSION "B" VARIES DEPENDING ON THE JOINT MANUFACTURER. THE DEPTH "D" OF EMBEDMENT OF THE COMPRESSION SEAL IN THE JOINT SHALL BE SET BY THE FABRICATOR AND IS EQUAL TO THE COMPRESSED SEAL HEIGHT PLUS 1/2" (±1/8").
3. ALL PREFORMED ELASTOMERIC COMPRESSION SEALS SHALL CONFORM TO THE MATERIAL REQUIREMENTS OF SUBSECTION 908.03 OF THE 2007 NJDOT STANDARD SPECIFICATIONS FOR ROAD AND BRIDGE CONSTRUCTION AS MODIFIED BY THE SPECIAL PROVISIONS.
4. INCLUDE THE COST FOR THE LONGITUDINAL IN THE ITEM "CONCRETE BRIDGE DECK, HPC".
5. INCLUDE THE COST FOR THE COLD-POURED JOINT SEALER WITH BACKER ROD IN THE ITEM "CONCRETE BRIDGE PARAPET, HPC".

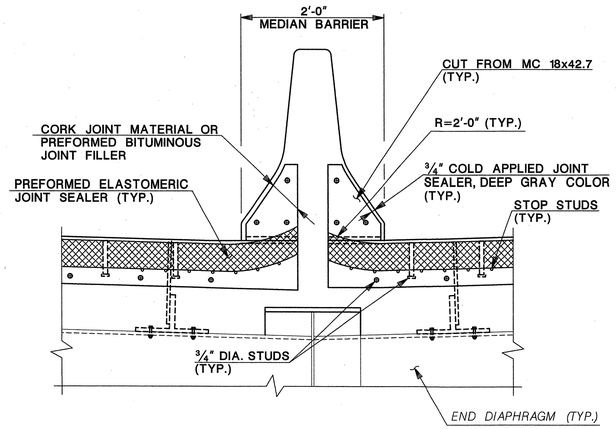

SECTION 12-12
SCALE: 1"=1'-0"

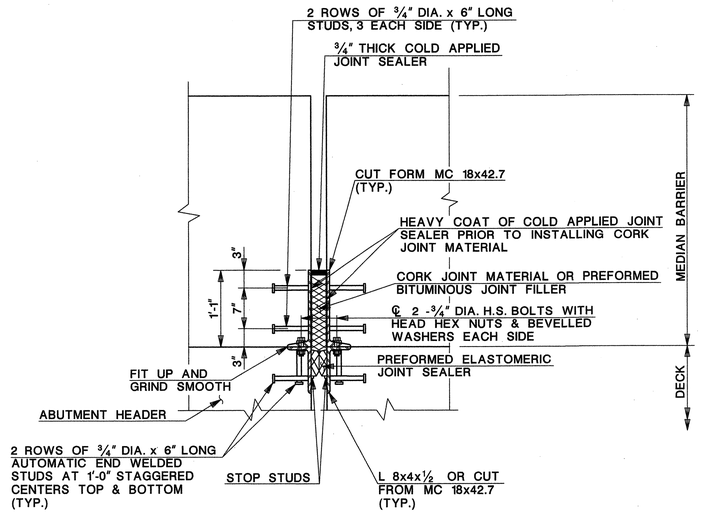

SECTION 13-13
SCALE: 1" = 1'-0"

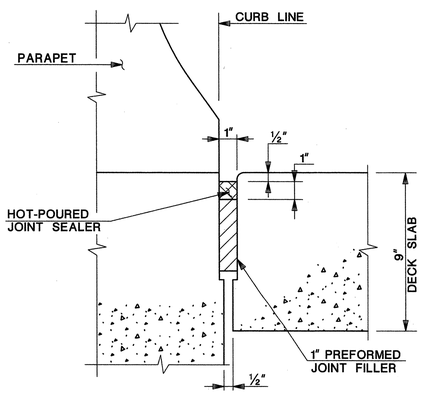

SECTION 9-9
SCALE: 3" = 1'-0"
(SEE NOTE 4)

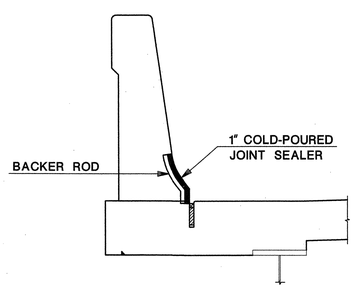

SECTION 10-10
SCALE: 3/4" = 1'-0"
(SEE NOTE 5)

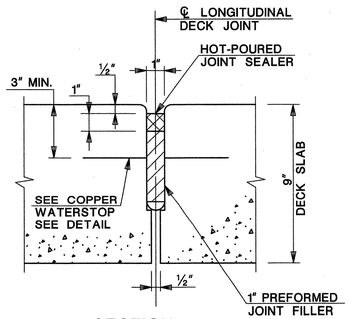

SECTION 11-11
SCALE: 3" = 1'-0"
(SEE NOTE 4)

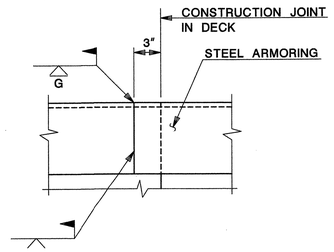

JOINT ARMOR FIELD SPLICE DETAIL
SCALE: 1 1/2" = 1'-0"

BRIDGE NO. 1

NEW JERSEY DEPARTMENT OF TRANSPORTATION
BUREAU OF STRUCTURAL ENGINEERING

DECK JOINT DETAILS II

ROUTE 80 BRIDGES OVER ROUTE 287
NORTHBOUND AND SMITH ROAD
CONTRACT NO. 043003714

DEWBERRY-GOODKIND, INC. COA# 24GA28047600

BRIAN D. JECKER, P.E. DATE 8-24-10
NEW JERSEY PROFESSIONAL ENGINEER LICENSE. NO. 24GE04088600

BRIDGE SHEET NO. B-20 OF B-58

91
129

CONTROL SECTION		JOB NO.	
DES. BY	R. GANDIA	CHK. BY	B. JECKER
DWN. BY	A.BETANCOURT		
IN CHARGE OF	R. GANDIA		

REVISION	BY	C'K'D	DATE

1"=1'-0" 1 6" 0 1 2 3/4"=1'-0" 1 6" 0 1 2 3 3"=1'-0" 0 3" 6" 9" 1 1/2"=1'-0" 1 9" 6" 3" 0 1

Dewberry-Goodkind, Inc.
Bloomfield, N.J.

bjecker 8/19/2010 2:06:49 PM OceTDS700-BW.plt 30-Scale 3056-REDECKING-Route80-287-Rt3,3056\Redecking\CAD\Struct\Bridge1\BR1-DECKJT2.dgn

STATE	FEDERAL PROJECT NO.	SHEET	TOTAL SHEETS
N.J.	BR-080-5(094)		

STRUCTURE NO. **1414-168**

STRUCTURE NAME
ROUTE I-80 OVER ROUTE I-287
NORTHBOUND AND RAMPS D&H

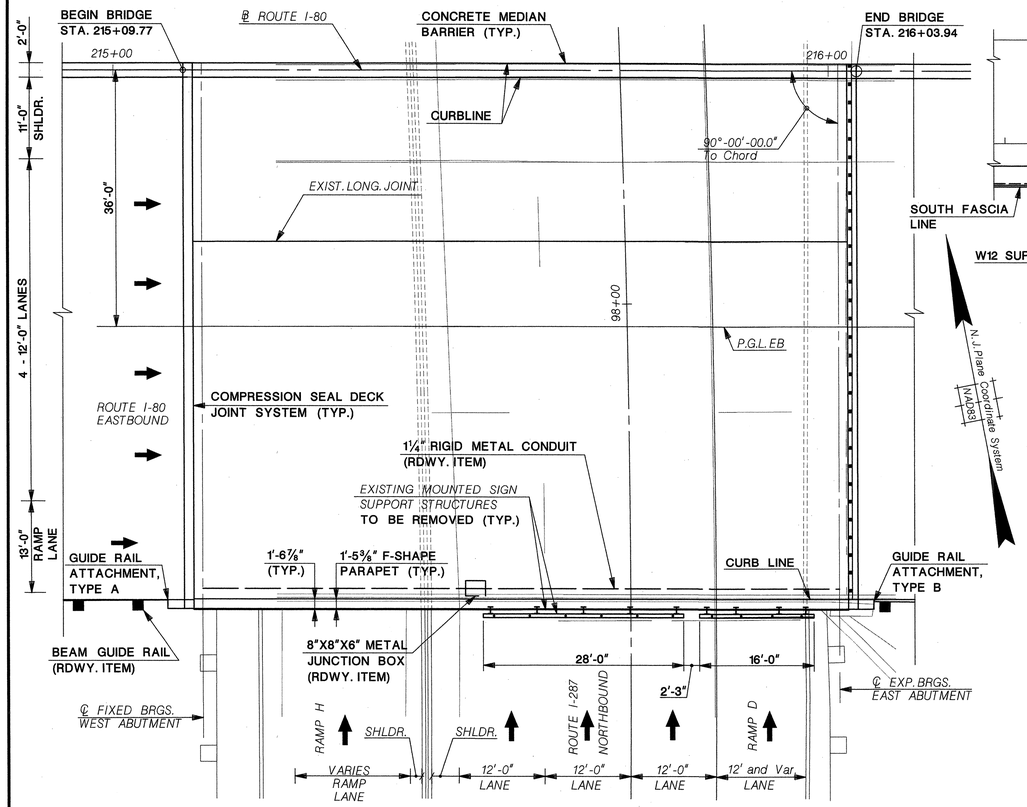

NOTE:
SIGN PANEL HANGERS AND SIGN LIGHTING SYSTEM NOT SHOWN.

PLAN
SCALE: 1"=10'

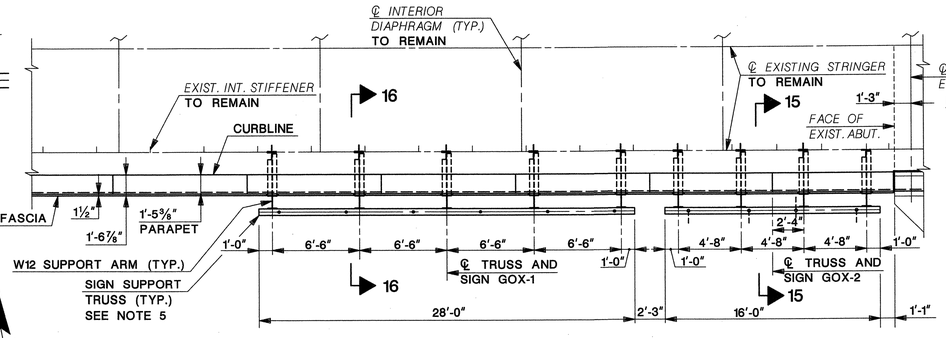

FRAMING PLAN
SCALE: 3/16"=1'-0"

NOTES:

1. ALL BRIDGE AND ROADWAY DIMENSIONS SHOWN ON THESE PLANS ARE BASED UPON ORIGINAL CONSTRUCTION PLANS. VISIT THE SITE AND VERIFY ALL DIMENSIONS PRIOR TO ANY CONSTRUCTION OR FABRICATION. SUBMIT ANY NECESSARY CHANGES TO THE ENGINEER FOR APPROVAL.
2. REMOVE EXISTING BRIDGE MOUNTED SIGN SUPPORT STRUCTURE INCLUDING ALL ATTACHMENTS. FILL EXISTING HOLES IN FASCIA STRINGER WITH GALVANIZED H.S. BOLTS WITH A DIAMETER 1/16" SMALLER THAN THE HOLE. INCLUDE ALL COSTS IN THE ITEM "BRIDGE MOUNTED SIGN SUPPORT, STRUCTURE NO. 1".
3. SIGN PANEL HANGERS AND LIGHTING SYSTEM SUPPORTS SHALL BE ALUMINUM I-BEAM AND SPACED NOT MORE THAN 5'-0" CENTER-TO-CENTER. FOR ADDITIONAL INFORMATION, SEE REFERENCE NO. 4.
4. INCLUDE ALL COSTS OF MOUNTED SIGN SUPPORT STRUCTURES FOR SIGNS GOX-1 AND GOX-2 IN THE PAY ITEM "BRIDGE MOUNTED SIGN SUPPORT, STRUCTURE NO. 1".
5. SIGN PANNEL, SIGN HANGERS AND SIGN LIGHTING SYSTEM NOT SHOWN FOR CLARITY.

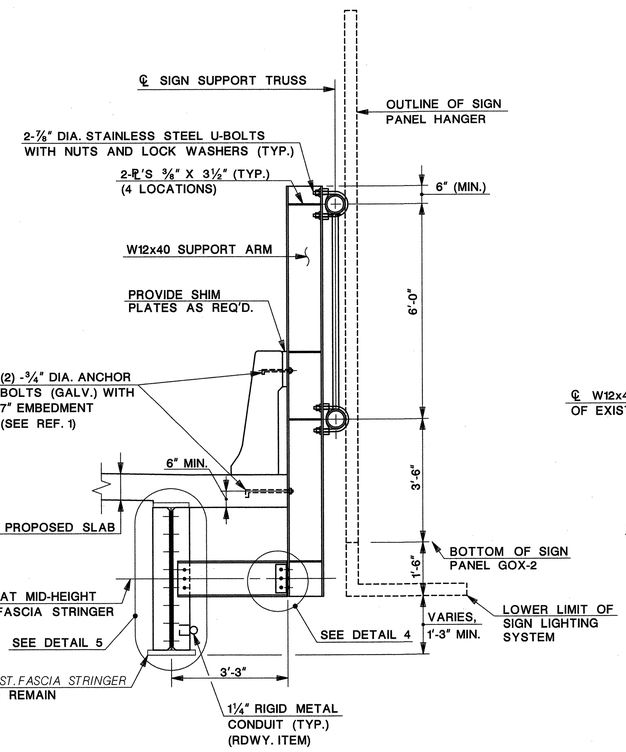

SECTION 15-15
SCALE: ½"=1'-0"

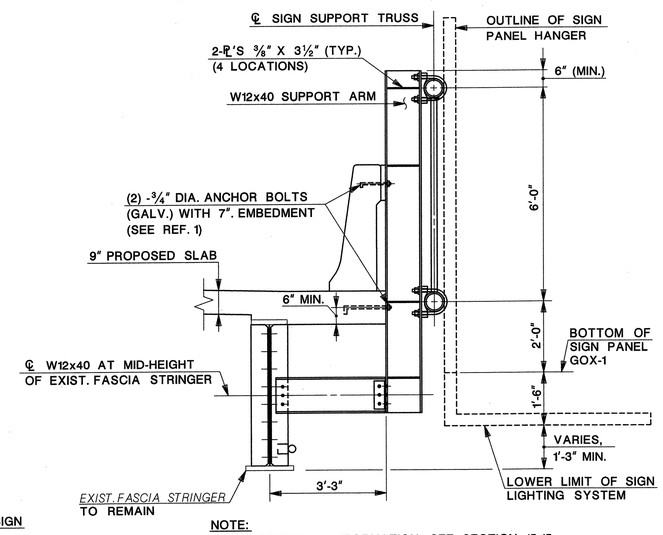

NOTE:
FOR ADDITIONAL INFORMATION, SEE SECTION 15-15.

SECTION 16-16
SCALE: ½"=1'-0"

REFERENCES:

1. FOR ADDITIONAL NOTES, ANCHOR BOLT DETAIL, SIGN SUPPORT TRUSS DETAILS 4 AND 5 AND SUPPORT ANGLE DETAIL, SEE SHEET NO. B-22.
2. FOR LIGHTING DETAILS, SEE HIGHWAY LIGHTING PLANS.
3. FOR 1¼" RIGID METALLIC CONDUIT MOUNTING DETAIL, SEE SHEET NO. B-22.
4. FOR SIGN PANEL HANGER, SIGN PANEL CONNECTION AND LIGHTING SYSTEM SUPPORT DETAILS, SEE SHEET B-58.

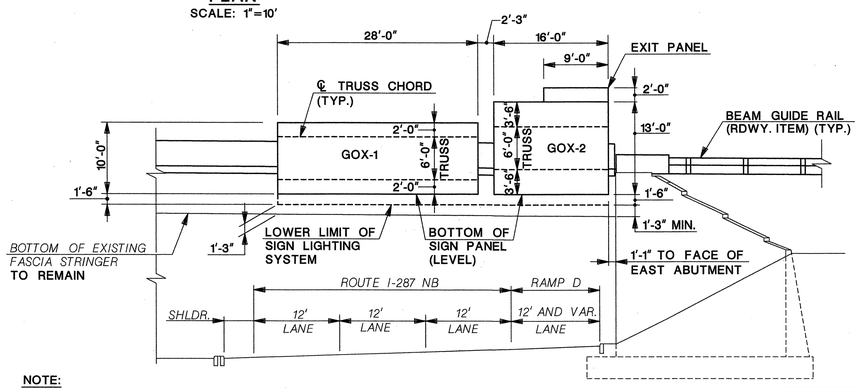

NOTE:
EXISTING SIGN STRUCTURES TO BE REMOVED NOT SHOWN.

ELEVATION
(LOOKING IN DIRECTION OF TRAVEL)
SCALE: 1"=10'

QUANTITIES

ITEM NO.	DESCRIPTION	UNIT	CONTRACT QUANTITY
512006M	BRIDGE MOUNTED SIGN SUPPORT, STRUCTURE NO.1	UNIT	1

½"=1'-0" 1 6" 0 2 4 | 3/16"=1'-0" 1 0 5 10 | 1"=10' 10 0 10 20

REVISION	BY	C'K'D	DATE

BRIDGE NO. 1

NEW JERSEY DEPARTMENT OF TRANSPORTATION
BUREAU OF STRUCTURAL ENGINEERING

BRIDGE MOUNTED SIGN SUPPORT DETAILS I

ROUTE 80 BRIDGES OVER ROUTE 287
NORTHBOUND AND SMITH ROAD
CONTRACT NO. 043003714

DEWBERRY-GOODKIND, INC. COA# 24GA28047600
BRIAN D. JECKER, P.E. DATE 8-24-10
NEW JERSEY PROFESSIONAL ENGINEER LICENSE NO. 24GE04088600

BRIDGE SHEET NO. B-21 OF B-58

92 / 129

CONTROL SECTION		JOB NO.	
DES. BY	R. GANDIA	CHK. BY	J. SMITH
DWN. BY	J. CRESPO		
IN CHARGE OF	R. GANDIA		

Dewberry-Goodkind, Inc.
Bloomfield, N.J.

bjecker 8/19/2010 2:06:54 PM OceTDS700-BW.plt 30-Scale 3056-REDECKING-Route80-287-SB\3056\Redecking\CAD\Struct\Bridge1\BR1-SIGNGPE.dgn

STATE	FEDERAL PROJECT NO.	SHEET	TOTAL SHEETS
N.J.	BR-080-5(094)		

STRUCTURE NO. 1414-168

STRUCTURE NAME
ROUTE I-80 OVER ROUTE I-287
NORTHBOUND AND RAMPS D&H

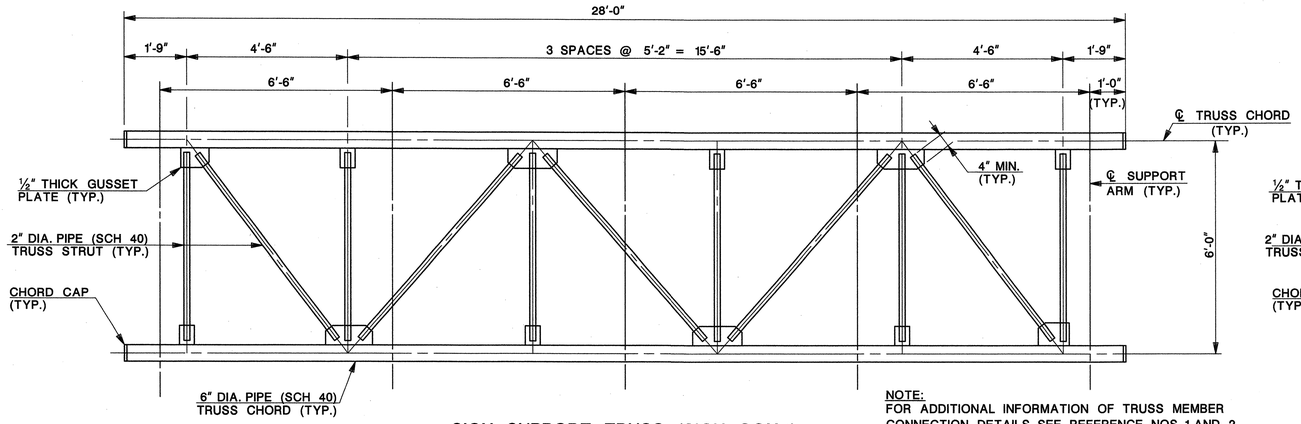

NOTE:
FOR ADDITIONAL INFORMATION OF TRUSS MEMBER CONNECTION DETAILS, SEE REFERENCE NOS. 1 AND 2.

SIGN SUPPORT TRUSS (SIGN GOX-1)
SCALE: ½"=1'-0"

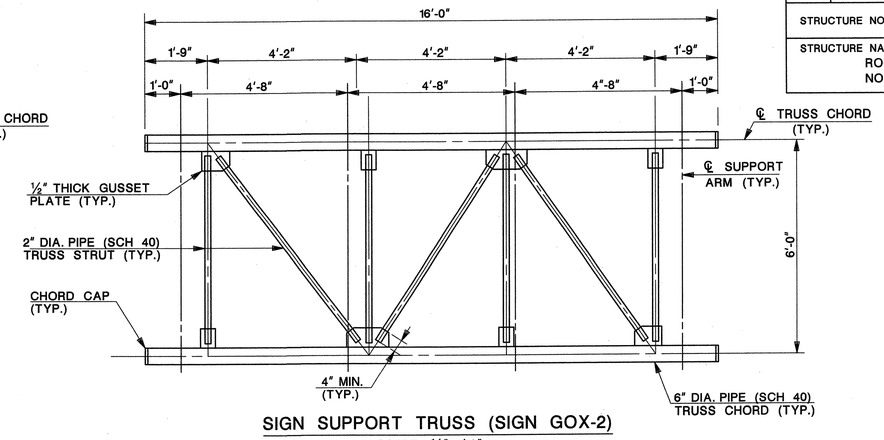

SIGN SUPPORT TRUSS (SIGN GOX-2)
SCALE: ½"=1'-0"

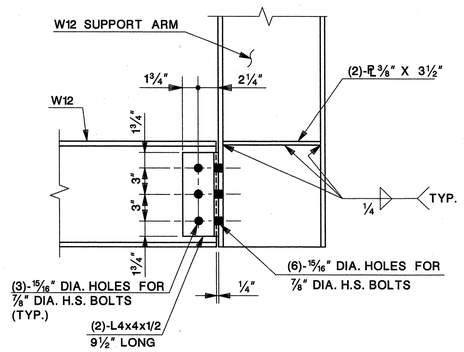

DETAIL 4
SCALE: 1½"=1'-0"

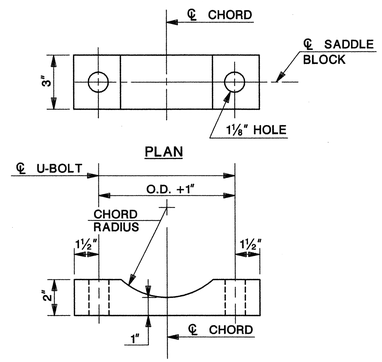

SADDLE BLOCK DETAIL
SCALE: 3"=1'-0"

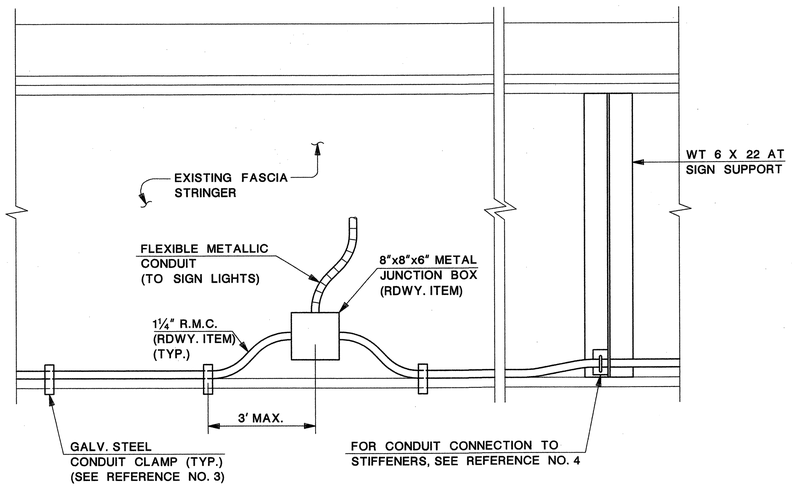

RIGID METALLIC CONDUIT MOUNTING DETAIL
NOT TO SCALE

NOTES:

1. ALL STRUCTURAL MEMBERS SHALL CONFORM TO AASHTO M270, GRADE 50 (ASTM A709, GRADE 50). PIPE SHALL BE SEAMLESS STEEL PIPE (SCH. 40) CONFORMING TO ASTM A53, TYPE S OR TYPE E, GRADE B.
2. HIGH STRENGTH STEEL BOLTS, WITH SUITABLE NUTS AND WASHERS, SHALL CONFORM TO ASTM A325 AND SHALL BE HOT DIP GALVANIZED CONFORMING TO ASTM A153.
3. STAINLESS STEEL U-BOLTS, NUTS AND WASHERS SHALL CONFORM TO ASTM A320, GRADE B8, CLASS 1.
4. CAPS FOR THE ENDS OF CHORDS SHALL BE STEEL CONFORMING TO AASHTO M270 GRADE 36 OR 50, AND SHALL BE HOT DIP GALVANIZED AS PER ASTM SPECIFICATION A153, CLASS C.
5. AFTER COMPLETION OF FABRICATION, EACH STEEL SECTION SHALL BE HOT-DIP GALVANIZED CONFORMING TO ASTM A123.
6. SHIM PLATES SHALL BE STAINLESS STEEL OR HOT DIPPED GALVANIZED STEEL.
7 PRIOR TO FIELD WELDING, REMOVE GALVANIZING AS REQUIRED THEN REPAIR AND REGALVANIZE THE AFFECTED AREA.

REFERENCES:

1. FOR TRUSS MEMBER CONNECTION DETAILS, SEE SHEET B-56.
2. FOR CHORD CAP DETAIL, SEE SHEET B-57.
3. FOR CONDUIT MOUNTING ON BEAM FLANGE, SEE STANDARD ELECTRICAL DETAILS L.1901.
4. FOR CONDUIT CONNECTION TO STIFFENER WT, SEE STANDARD ELECTRICAL DETAILS ITS 704-19, DETAIL G.

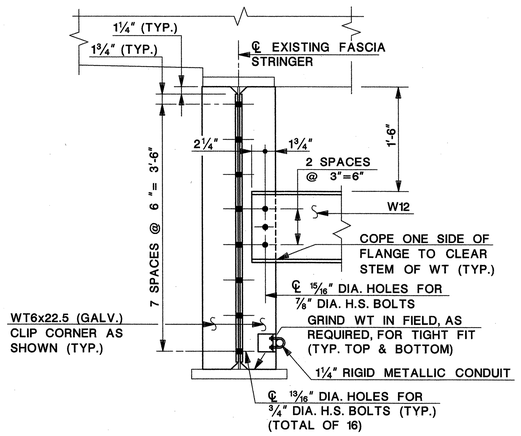

DETAIL 5
SCALE: 1"=1'-0"

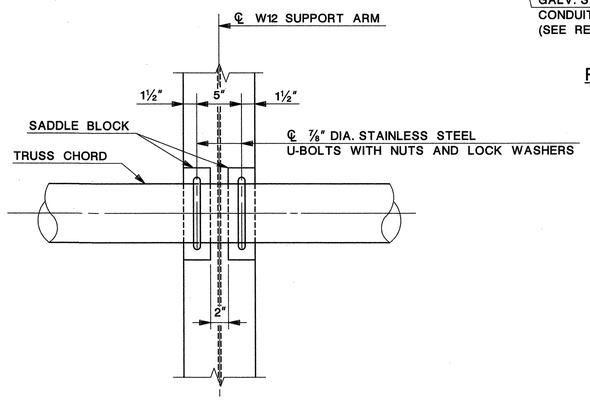

TRUSS CONNECTION DETAIL
SCALE: 1½"=1'-0"

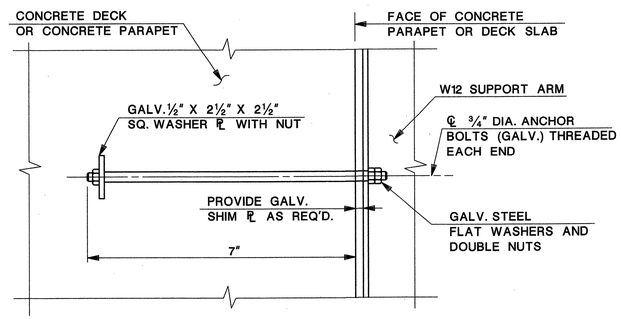

ANCHOR BOLT DETAIL
NOT TO SCALE

CONTROL SECTION		JOB NO.	
DES. BY	R. GANDIA	CHK. BY	J. SMITH
DWN. BY	J. CRESPO		
IN CHARGE OF	R. GANDIA		

REVISION	BY	C'K'D	DATE

BRIDGE NO. 1

NEW JERSEY DEPARTMENT OF TRANSPORTATION
BUREAU OF STRUCTURAL ENGINEERING

BRIDGE MOUNTED SIGN SUPPORT DETAILS II

ROUTE 80 BRIDGES OVER ROUTE 287 NORTHBOUND AND SMITH ROAD
CONTRACT NO. 043003714

DEWBERRY-GOODKIND, INC. COA# 24GA28047600

BRIAN D. JECKER, P.E. DATE 8-24-10
NEW JERSEY PROFESSIONAL ENGINEER LICENSE. NO. 24GE04088600

BRIDGE SHEET NO. B-22 OF B-58

93
129

Dewberry-Goodkind, Inc.
Bloomfield, N.J.

½"=1'-0" 1 6" 0 2 4
3"=1'-0" 0 3' 6' 9'
1"=1'-0" 1 6" 0 1 2
1½"=1'-0" 1 9" 6" 3" 0 1

STATE	FEDERAL PROJECT NO.	SHEET	TOTAL SHEETS
N.J.	BR-080-5(094)		

STRUCTURE NO. **1414-168**

STRUCTURE NAME
ROUTE I-80 OVER ROUTE I-287
NORTHBOUND AND RAMPS D&H

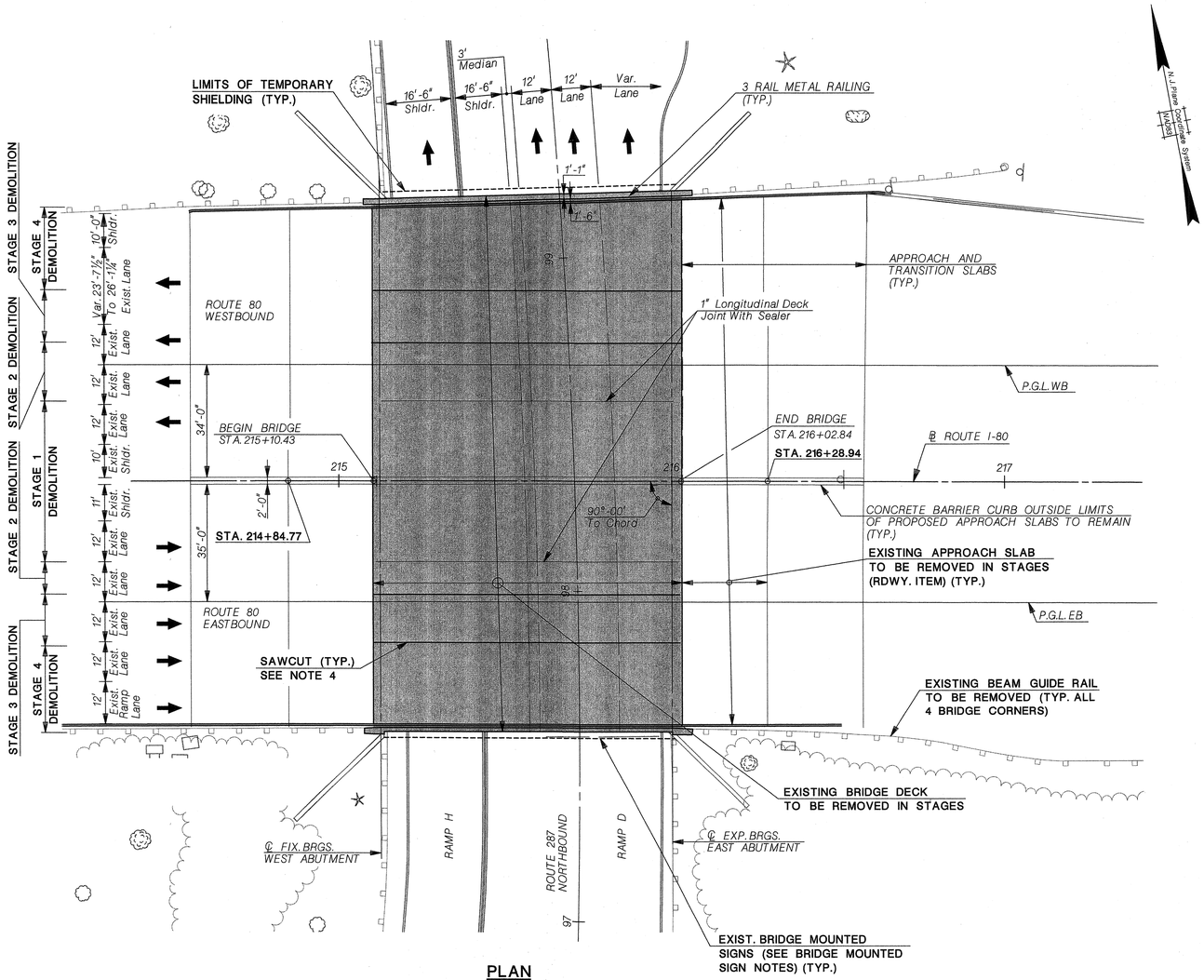

PLAN
SCALE: 1"=20'-0"

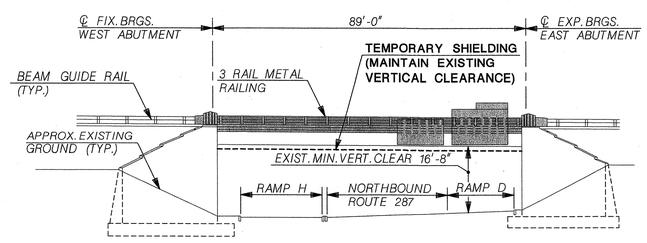

ELEVATION
SCALE: 1"=20'-0"

QUANTITIES

ITEM NO.	DESCRIPTION	UNIT	CONTRACT QUANTITY
201006P	CLEARING SITE, BRIDGE (STRUCTURE NO. 1414-168)	LUMP SUM	LUMP SUM
201039P	TEMPORARY SHIELDING	LUMP SUM	LUMP SUM
554003P	POLLUTION CONTROL SYSTEM	LUMP SUM	LUMP SUM
554009P	NEAR-WHITE BLAST CLEANING AND PAINTING	LUMP SUM	LUMP SUM

ESTIMATE OF QUANTITIES TO BE REMOVED

DESCRIPTION	UNIT	QUANTITY
CONCRETE ABUTMENT WALL	C.Y.	45
CONCRETE DECK	C.Y.	405
CONCRETE SIDEWALK	C.Y.	30
24" X 32" CONCRETE BARRIER CURB, BRIDGE	L.F.	95
METAL RAILING	L.F.	173
BRIDGE MOUNTED SIGN PANELS	UNIT	2

BRIDGE MOUNTED SIGN NOTES:

1. TEMPORARILY RELOCATE SIGN PANEL A OFF STRUCTURE DURING STAGE 1, SEE REFERENCES 2 AND 3.
2. REMOVE EXISTING SIGN SUPPORTS DURING STAGE 4, SEE REFERENCE 3.

NOTES:

1. THE INFORMATION SHOWN ON THIS PLAN WAS TAKEN FROM THE EXISTING PLANS AVAILABLE AT NJDOT ENGINEERING DOCUMENTS UNIT AND IS FOR INFORMATIONAL PURPOSES ONLY. THE DATA SHOWN IS NOT GUARANTEED TO BE CORRECT, AND IS NOT INTENDED TO BE COMPLETE OR ALL INCLUSIVE. VISIT THE SITE PRIOR TO SUBMITTING BIDS TO ASCERTAIN THE FULL EXTENT OF WORK.
2. ALL ESTIMATED QUANTITIES FOR REMOVAL ARE BASED ON THE EXISTING PLANS.
3. INCLUDE ANY WORK RELATED TO DEMOLITION ACTIVITIES AND DISPOSAL OF DEMOLITION MATERIALS UNDER THE PAY ITEM "CLEARING SITE, BRIDGE (STRUCTURE NO. 1414-168)".
4. SAW CUT THE EXISTING BRIDGE DECK AND ABUTMENTS AT THE STAGE CONSTRUCTION JOINTS. INCLUDE SAW CUTTING THE BRIDGE DECK UNDER THE PAY ITEM "CLEARING SITE, BRIDGE (STRUCTURE NO. 1414-169)".
5. SAW CUT THE EXISTING ABUTMENTS AND WINGWALLS TO A DEPTH OF 1" AT CONSTRUCTION JOINTS. INCLUDE SAW CUTTING THE ABUTMENTS AND WINGWALLS UNDER THE PAY ITEM "CLEARING SITE, BRIDGE (STRUCTURE NO. 1414-169)".
6. THE EXISTING PAINT ON THE TOP FLANGE & SHEAR CONNECTORS MAY CONTAIN LEAD. REFER TO SECTION 554 OF THE STANDARD SPECIFICATIONS FOR POLLUTION CONTROL REQUIREMENTS AND CLEANING AND PAINTING OF THE TOP FLANGE.
7. PERFORM A SURVEY OF THE EXISTING TOP OF STEEL BEAM ELEVATIONS PRIOR TO AND AFTER DECK DEMOLITION TO ESTABLISH PROPER SCREED ELEVATIONS. SET ALL SURVEY POINTS AT THE SAME LOCATION AND USE THE SAME DATUM. AT A MINIMUM, SET SURVEY POINTS AT THE BEAM'S QUARTER POINTS. INCLUDE ALL COSTS UNDER THE PAY ITEM "CLEARING SITE, BRIDGE (STRUCTURE NO. 1414-168)".

REFERENCES:

1. FOR ABUTMENT DEMOLITION PLANS AND ELEVATIONS, SEE SHEET NO. B-24.
2. FOR TRAFFIC CONTROL AND STAGING PLANS, SEE SHEET NO. TC-7.
3. FOR CONSTRUCTION STAGING, SEE SHEET NO. B-6.

LEGEND:

→ - DIRECTION OF TRAVEL

▒ - TO BE DEMOLISHED

1"=20' 20 0 20 40

REVISION	BY	C'K'D	DATE

BRIDGE NO. 1

NEW JERSEY DEPARTMENT OF TRANSPORTATION
BUREAU OF STRUCTURAL ENGINEERING

SUPERSTRUCTURE DEMOLITION PLAN

ROUTE 80 BRIDGES OVER ROUTE 287
NORTHBOUND AND SMITH ROAD
CONTRACT NO. 043003714

DEWBERRY-GOODKIND, INC. COA# 24GA28047600

BRIAN D. JECKER, P.E. DATE 8-24-10
NEW JERSEY PROFESSIONAL ENGINEER LICENSE NO. 24GE04088600

BRIDGE SHEET NO. B-23 OF B-58

94 / 129

CONTROL SECTION		JOB NO.	
DES. BY	W. LANG	CHK. BY	J. SMITH
DWN. BY	M. NAFIS		

IN CHARGE OF J. SMITH

Dewberry-Goodkind, Inc.
Bloomfield, N.J.

bjecker 8/19/2010 2:07:03 PM OceTDS700-BW.plt 30-Scale 3056-REDECKING-Route80-287-Smith\3056\Redecking\CAD\Struct\Bridge1\BR1-DEMO1.dgn

STATE	FEDERAL PROJECT NO.	SHEET	TOTAL SHEETS
N.J.	BR-080-5(094)		

STRUCTURE NO. 1414-168

STRUCTURE NAME
ROUTE I-80 OVER ROUTE I-287
NORTHBOUND AND RAMPS D&H

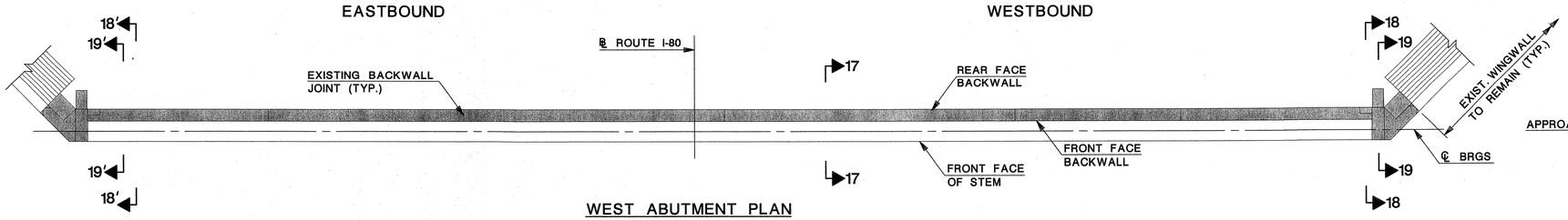

WEST ABUTMENT PLAN
SCALE: 1/8″ = 1′-0″

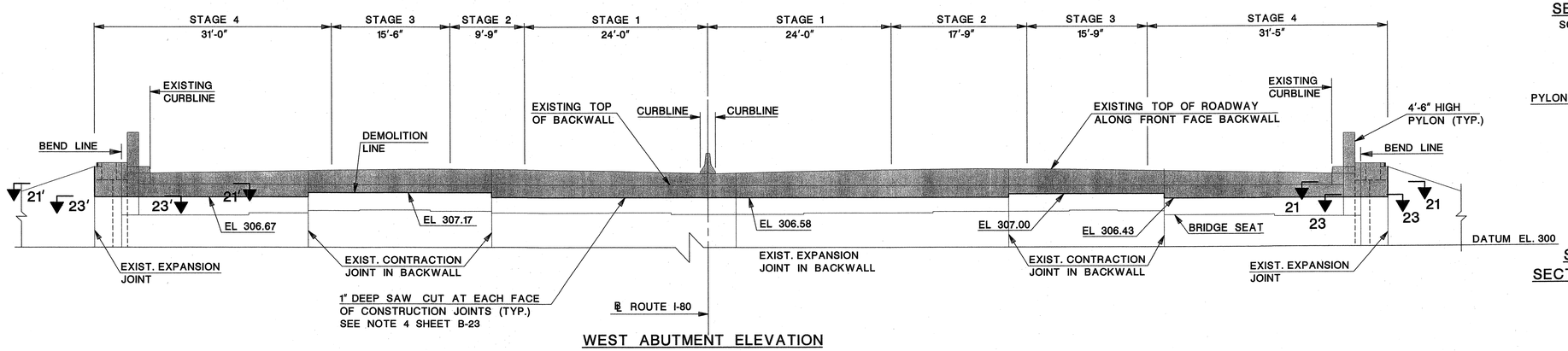

WEST ABUTMENT ELEVATION
SCALE: 1/8″ = 1′-0″

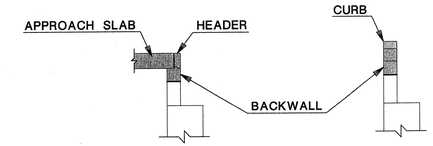

SECTION 17-17
SCALE: 1/8″ = 1′-0″

SECTION 18-18
SECTION 18′-18′ SIMILAR
SCALE: 1/8″ = 1′-0″

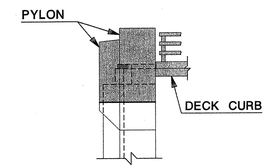

SECTION 19-19
SECTION 19′-19′ SIMILAR
SCALE: 1/8″ = 1′-0″

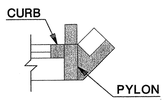

SECTION 20-20
SECTION 20′-20′ SIMILAR
SCALE: 1/8″ = 1′-0″

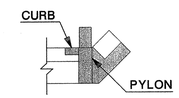

SECTION 21-21
SECTION 21′-21′ SIMILAR
SCALE: 1/8″ = 1′-0″

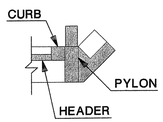

SECTION 22-22
SECTION 22′-22′ SIMILAR
SCALE: 1/8″ = 1′-0″

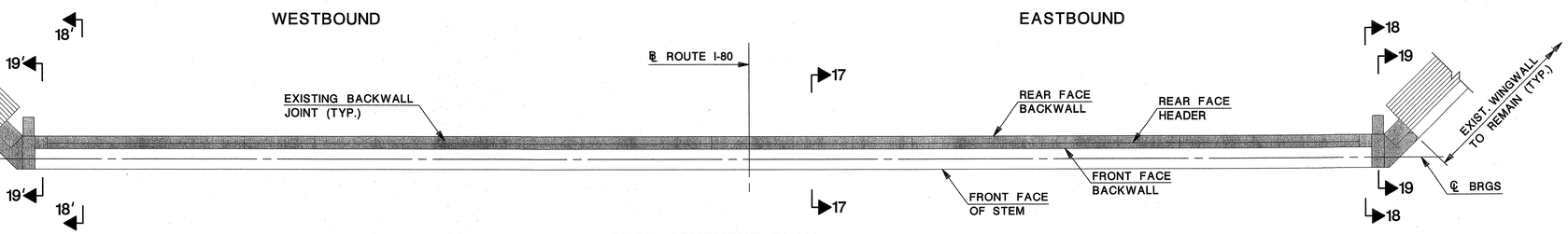

EAST ABUTMENT PLAN
SCALE: 1/8″ = 1′-0″

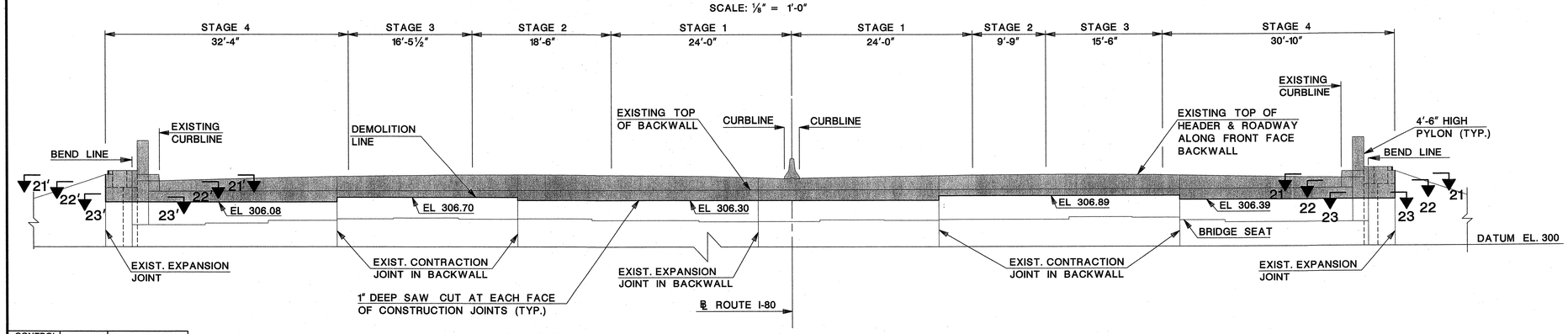

EAST ABUTMENT ELEVATION
SCALE: 1/8″ = 1′-0″

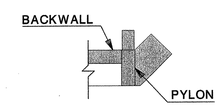

SECTION 23-23
SECTION 23′-23′ SIMILAR
SCALE: 1/8″ = 1′-0″

LEGEND:

- TO BE DEMOLISHED

CONTROL SECTION		JOB NO.	
DES. BY	W. LANG	CHK. BY	J. SMITH
DWN. BY	M. NAFIS		

IN CHARGE OF J. SMITH

1/8″=1′-0″ 8 0 8 16

REVISION	BY	C'K'D	DATE

BRIDGE NO. 1

NEW JERSEY DEPARTMENT OF TRANSPORTATION
BUREAU OF STRUCTURAL ENGINEERING

ABUTMENT DEMOLITION PLAN

ROUTE 80 BRIDGES OVER ROUTE 287
NORTHBOUND AND SMITH ROAD
CONTRACT NO. 043003714

DEWBERRY-GOODKIND, INC. COA# 24GA28047600

BRIAN D. JECKER, P.E. 8-24-10 DATE

NEW JERSEY PROFESSIONAL ENGINEER LICENSE NO. 24GE04088600

BRIDGE SHEET NO. B-24 OF B-58

95
129

Dewberry-Goodkind, Inc.
Bloomfield, N.J.

bjecker 8/19/2010 3:33:09 PM OceTDS700-BW.plt 30-Scale 3056-REDECKING-Route80-287-NB,3056\Redecking\CAD\Struct\Bridge1\BR1-DEMO2.dgn

STATE	FEDERAL PROJECT NO.	SHEET	TOTAL SHEETS
N.J.	BR-080-5(094)		

STRUCTURE NO. 1414-168

STRUCTURE NAME
ROUTE I-80 OVER ROUTE I-287
NORTHBOUND AND RAMPS D&H

CONCRETE REPAIR NOTES:

1. REMOVE ALL HOLLOW UNSOUND AND DETERIORATED CONCRETE AS PER SPECIAL PROVISIONS. SAWCUT THE EDGES OF AREA TO BE REPAIRED PERPENDICULAR TO THE FACE OF THE CONCRETE TO A MINIMUM DEPTH OF 2".
2. REMOVE DETERIORATED CONCRETE TO A SOUND CONCRETE SURFACE AND TO A DEPTH OF 1" BEHIND THE REINFORCEMENT OR TO 4" DEEP MINIMUM.
3. APPLY CONCRETE AS PER SPECIAL PROVISIONS AND FINISH TO MATCH EXISTING CONCRETE SURFACES AND ARCHITECTURAL DETAILS. PATCH MATERIAL SHALL BE FORMED.
4. PLACE ONE LAYER OF NON-GALVANIZED WELDED WIRE REINFORCEMENT FOR EVERY 3" OF PATCH DEPTH WHERE REINFORCING STEEL IS MISSING IN THE SPALL AREA. COST OF WIRE MESH TO BE INCLUDED IN THE BID PRICE OF REPAIRS.
5. WELDED WIRE REINFORCEMENT SHALL BE 2"X2"-W4XW4, EPOXY COATED WITH A MINIMUM COVER OF 2". REINFORCEMENT SHALL CONFORM TO ASTM A185/185M AND ASTM A884/A884M. THE COST SHALL BE INCLUDED IN THE BID PRICE OF REPAIRS.
6. MATCH AND CONTSTRUCT EXPANSION OR CONTRACTION JOINTS AT THE LOCATION OF EXISTING JOINTS.
7. CONCRETE REPAIRS ON INTERSECTION PLANES WILL BE MEASURED FOR PAYMENT ON ONE PLANE ONLY. MEASUREMENT WILL BE ON THE PLANE WITH THE LARGER REPAIR AREA.
8. CLEAN, REPAIR AND SUPPLEMENT EXISTING REINFORCEMENT STEEL AS SPECIFIED IN SUB SECTION 551.03.02 C "CLEANING AND SPLICING REINFORCEMENT STEEL.
9. REPAIR EPOXY WATERPROOFING IF THE SUBSTRUCTURE CONCRETE REPAIR EXTENDS INTO THE REGION OF EXISTING WATERPROOFING. INCLUDE THE COST OF REPAIR UNDER THE ITEM "SUBSTRUCTURE CONCRETE REPAIR."
10. INCLUDE COSTS FOR DRILLING AND EPOXY GROUTING THE HOOKED BARS UNDER THE ITEM "SUBSTRUCTURE CONCRETE REPAIR".

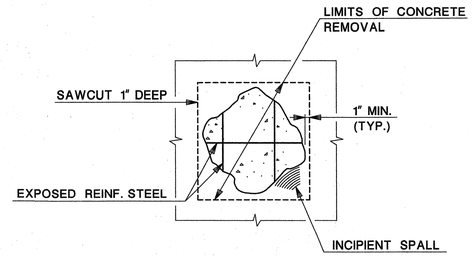

SUBSTRUCTURE CONCRETE REPAIR WITH EXPOSED REBAR
SCALE: N.T.S.

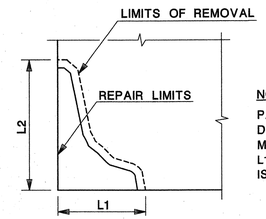

NOTE:
PAY LIMITS WILL BE DETERMINED BY THE MAXIMUM AREA OF L1 OR L2, WHICH EVER IS GREATER (SEE NOTE 7).

PLAN-CORNER REPAIR PAY LIMITS
SCALE: N.T.S.

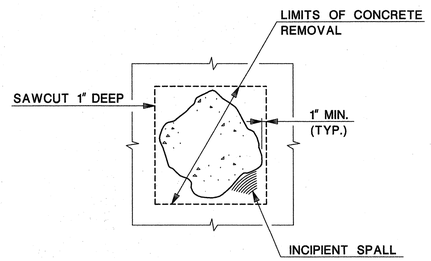

SUBSTRUCTURE CONCRETE REPAIR WITHOUT EXPOSED REBAR
SCALE: N.T.S.

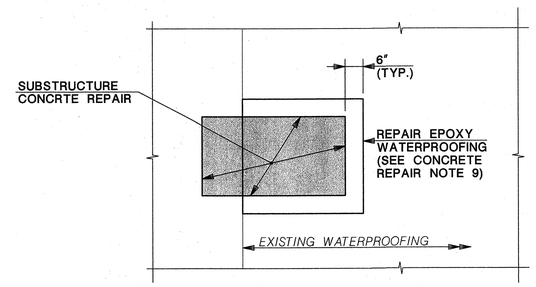

LIMITS OF EPOXY WATERPROOFING REPAIR
NOT TO SCALE

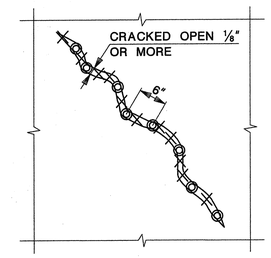

LEGEND:

~~	OPEN CRACK (1/8 INCHE OR MORE)
◎	PRESSURE INJECTION PORTS
XXXX	CRACK SURFACE SEALANT TO BE REMOVED AFTER SEALING IS COMPLETED

PRESSURE INJECTION, CONCRETE CRACKS
SCALE: N.T.S.

PRESSURE INJECTION, OF CRACKS:

1. PRESSURE INJECT WITH EPOXY CRACKS WITH WIDTHS 1/8" OR GREATER.
2. REMOVE LOOSE MATERIALS, CLEAN AND PREPARE SURFACES IN ACCORDANCE WITH SECTION 552 OF THE STANDARD SPECIFICATIONS AND THE SPECIAL PROVISION.
3. APPLY A SURFACE SEAL MATERIAL TO THE FACE OF THE CRA IN ACCORDANCE WITH SECTION 552 OF THE STANDARD SPECIFICATIONS PRIOR TO INJECTING EPOXY IN THE CRACK.
4. PRESSURE INJECT EPOXY MATERIAL IN ACCORDANCE WITH SECTION 552 OF THE STANDARD SPECIFICATION.

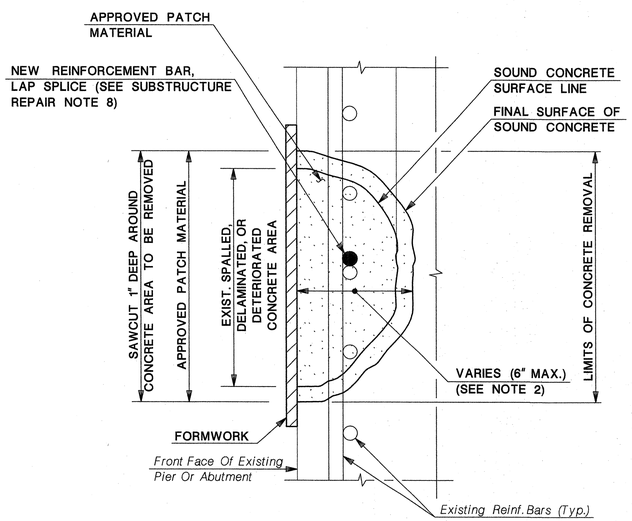

SUBSTRUCTURE CONCRETE REPAIR
(WITH EXISTING REINFORCEMENT PRESENT)
SCALE: N.T.S.

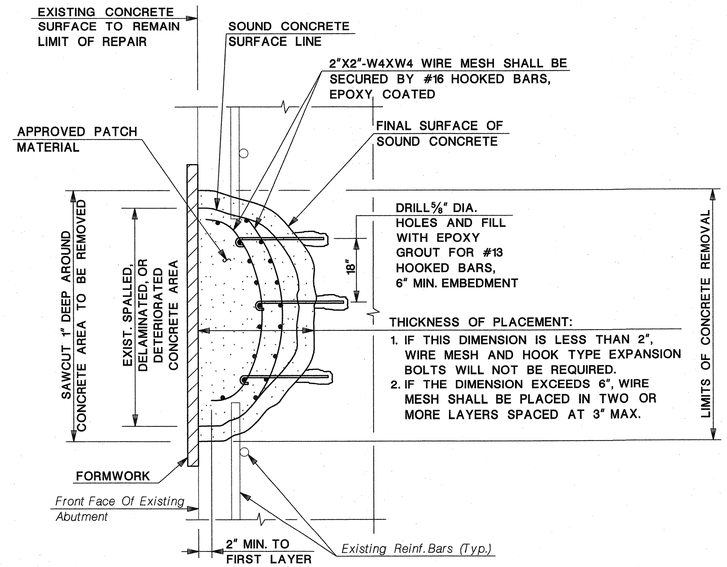

SUBSTRUCTURE CONCRETE REPAIR
(WITH EXISTING REINFORCEMENT MISSING)
SCALE: N.T.S.

NOTES:

1. REINFORCEMENT BAR DETAILS SHOWN ARE GENERAL, ACTUAL REINFORCEMENT BAR SPACINGS AND LOCATIONS WILL VARY FROM LOCATION TO LOCATION.

REVISION	BY	C'K'D	DATE

BRIDGE NO. 1

NEW JERSEY DEPARTMENT OF TRANSPORTATION
BUREAU OF STRUCTURAL ENGINEERING

SUBSTRUCTURE REPAIR DETAILS

ROUTE 80 BRIDGES OVER ROUTE 287
NORTHBOUND AND SMITH ROAD
CONTRACT NO. 043003714

DEWBERRY-GOODKIND, INC. COA# 24GA28047600

BRIAN D. JECKER, P.E. DATE 8-24-10
NEW JERSEY PROFESSIONAL ENGINEER LICENSE. NO. 24GE04088600

BRIDGE SHEET NO. B-25 OF B-58

96 / 129

CONTROL SECTION		JOB NO.	
DES. BY	R. GANDIA	CHK. BY	J. SMITH
DWN. BY	A.BETANCOURT		
IN CHARGE OF	R. GANDIA		

Dewberry-Goodkind, Inc.
Bloomfield, N.J.

bjecker 8/19/2010 3:32:52 PM OceTDS700-BW.plt 30-Scale 3056-REDECKING-Route80-287-4\3056\redecking\cad\struct\bridge1\BR1-SUBSTRUCT-DETAILS.dgn

STATE	FEDERAL PROJECT NO.	SHEET	TOTAL SHEETS
N.J.	BR-080-5(094)		

STRUCTURE NO. **1414-168**

STRUCTURE NAME
ROUTE I-80 OVER ROUTE I-287
NORTHBOUND AND RAMPS D&H

WEST ABUTMENT

MARK	SIZE	TYPE	LENGTH	QTY	A	B	C	D	E	F	G	H	REMARKS
STAGE 1													
BACKWALL - EPOXY COATED													
ABE1301	13	2	6-9	48	2-11	0-11	2-11						VERT U-BARS
ABE1303	13	STR	27-6	5									HORIZ EF (MC)
ABE1304	13	STR	20-2	5									HORIZ EF (MC)
ABE1327	13	2	6-11	3	2-6	1-6	2-11						VERT MEDIAN
ABE1601	16	12	2-7	102	0-6	1-7.2	0-5.5	0-3.7					TIE HOOKS
ABE1901	19	STR	3-11	102									DOWELS
ABE1902	19	35	5-3	51	1-1.7	0-6	0-11.7	1-6	1-2	0-4.2	0-4.2		VERT BRACKET
SUBTOTAL THIS SECTION					1668 LB								
HEADWALL - EPOXY COATED													
AHE1301	13	STR	27-6	6									HORIZ EF (MC)
AHE1302	13	STR	20-2	6									HORIZ EF (MC)
AHE1324	13	2	4-7	3	1-5.5	1-8	1-5.5						HORIZ MEDIAN
AHE1325	13	23	7-4	3	1-3.2	1-6.5	1-9	0-8.7	1-0.5				VERT MEDIAN
SUBTOTAL THIS SECTION					215 LB								
MEDIAN BARRIER - EPOXY COATED													
BPE1301	13	22	5-2	3	2-4.5	0-4.5	2-4.5	0-6	0-1.5				VERT MEDIAN
BPE1302	13	STR	1-8	5									HORIZ MEDIAN
SUBTOTAL THIS SECTION					16 LB								
EASTBOUND ROADWAY - STAGE 2													
BACKWALL - EPOXY COATED													
ABE1301	13	2	6-9	11	2-11	0-11	2-11						VERT U-BARS
ABE1305	13	STR	4-2	5									HORIZ EF (MC)
ABE1306	13	STR	5-3	5									HORIZ EF (MC)
ABE1601	16	12	2-7	22	0-6	1-7.2	0-5.5	0-3.7					TIE HOOKS
ABE1901	19	STR	3-11	22									DOWELS
ABE1902	19	35	5-3	11	1-1.7	0-6	0-11.7	1-6	1-2	0-4.2	0-4.2		VERT BRACKET
SUBTOTAL THIS SECTION					357 LB								
HEADWALL - EPOXY COATED													
AHE1303	13	STR	4-2	6									HORIZ EF (MC)
AHE1304	13	STR	5-3	6									HORIZ EF (MC)
SUBTOTAL THIS SECTION					38 LB								
EASTBOUND ROADWAY - STAGE 3													
BACKWALL - EPOXY COATED													
ABE1301	13	2	6-9	16	2-11	0-11	2-11						VERT U-BARS
ABE1307	13	STR	8-10	10									HORIZ EF (MC)
ABE1601	16	12	2-7	32	0-6	1-7.2	0-5.5	0-3.7					TIE HOOKS
ABE1901	19	STR	3-11	32									DOWELS
ABE1902	19	35	5-3	16	1-1.7	0-6	0-11.7	1-6	1-2	0-4.2	0-4.2		VERT BRACKET
SUBTOTAL THIS SECTION					533 LB								
HEADWALL - EPOXY COATED													
AHE1305	13	STR	8-10	12									HORIZ EF (MC)
SUBTOTAL THIS SECTION					71 LB								
EASTBOUND ROADWAY - STAGE 4													
BACKWALL - EPOXY COATED													
ABE1301	13	2	6-9	27	2-11	0-11	2-11						VERT U-BARS
ABE1308	13	STR	2-11	5									HORIZ EF (MC)
ABE1309	13	STR	21-6	2									HORIZ RF
ABE1329	13	STR	23-2	3									HORIZ FF
ABE1331	13	STR	3-6	6									HORIZ EF CORNER
ABE1601	16	12	2-7	54	0-6	1-7.2	0-5.5	0-3.7					TIE HOOKS
ABE1602	16	34	6-2	12	2-7.5	0-7.5	0-9.2	2-2	0-11				VERT PPT
ABE1604	16	STR	5-10	13									DOWELS FF
ABE1605	16	STR	4-7	8									DOWELS RF
ABE1607	16	STR	2-10	3									VERT CORNER
ABE1608	16	2	12-1	4	4-7	2-11	4-7						HORIZ U-BARS
ABE1609	16	14	7-3	4	---	2-6	2-2.5	2-6	1-9				HORIZ FF
ABE1610	16	2	7-5	4	3-10	3-7	---						HORIZ RF
ABE1611	16	14	5-5	2	1-3	0-11	0-9	2-6	1-9				HORIZ FF
ABE1612	16	STR	4-7	2									HORIZ FF
ABE1613	16	STR	4-10	2									HORIZ RF
ABE1901	19	STR	3-11	54									DOWELS
ABE1902	19	35	5-3	27	1-1.7	0-6	0-11.7	1-6	1-2	0-4.2	0-4.2		VERT BRACKET
SUBTOTAL THIS SECTION					1244 LB								
HEADWALL - EPOXY COATED													
AHE1306	13	STR	2-11	6									HORIZ EF (MC)
AHE1307	13	STR	21-6	6									HORIZ EF
SUBTOTAL THIS SECTION					98 LB								

WEST ABUTMENT

MARK	SIZE	TYPE	LENGTH	QTY	A	B	C	D	E	F	G	H	REMARKS
PARAPET - EPOXY COATED													
BPE1601	16	33	8-5	3	2-11	0-4	0-5	0-4	2-11	0-9			VERT PPT
BPE1602	16	33	7-7	6	2-6	0-4	0-5	0-4	2-6	0-9			1 SET OF 6
			TO		TO	TO	TO	TO	TO	TO			
			8-3		2-10	0-4	0-5	0-4	2-10	0-9			VERT PPT
BPE1603	16	33	5-10	3	2-3	0-4	---	0-4	2-3	0-4			1 SET OF 3
			TO		TO	TO	TO	TO	TO	TO			
			7-3		2-5	0-4	0-4.5	0-4	2-5	0-8			VERT PPT
BPE2201	22	STR	2-10	2									HORIZ PPT EF
BPE2202	22	STR	3-8	2									HORIZ PPT EF
BPE2203	22	STR	3-1	2									HORIZ PPT EF
BPE2501	25	STR	3-8	2									HORIZ PPT RF
BPE2502	25	7	3-8	2	---	0-10.7	2-9.7	0-10.2	0-3.5				HORIZ PPT FF
SUBTOTAL THIS SECTION					176 LB								
WESTBOUND ROADWAY - STAGE 2													
BACKWALL - EPOXY COATED													
ABE1301	13	2	6-9	19	2-11	0-11	2-11						VERT U-BARS
ABE1310	13	STR	2-3	5									HORIZ EF (MC)
ABE1311	13	STR	15-2	5									HORIZ EF (MC)
ABE1601	16	12	2-7	38	0-6	1-7.2	0-5.5	0-3.7					TIE HOOKS
ABE1901	19	STR	3-11	38									DOWELS
ABE1902	19	35	5-3	19	1-1.7	0-6	0-11.7	1-6	1-2	0-4.2	0-4.2		VERT BRACKET
SUBTOTAL THIS SECTION					621 LB								
HEADWALL - EPOXY COATED													
AHE1308	13	STR	2-3	6									HORIZ EF (MC)
AHE1309	13	STR	15-2	6									HORIZ EF (MC)
SUBTOTAL THIS SECTION					70 LB								
WESTBOUND ROADWAY - STAGE 3													
BACKWALL - EPOXY COATED													
ABE1301	13	2	6-9	16	2-11	0-11	2-11						VERT U-BARS
ABE1307	13	STR	8-10	10									HORIZ EF (MC)
ABE1601	16	12	2-7	32	0-6	1-7.2	0-5.5	0-3.7					TIE HOOKS
ABE1901	19	STR	3-11	32									DOWELS
ABE1902	19	35	5-3	16	1-1.7	0-6	0-11.7	1-6	1-2	0-4.2	0-4.2		VERT BRACKET
SUBTOTAL THIS SECTION					533 LB								
HEADWALL - EPOXY COATED													
AHE1305	13	STR	8-10	12									HORIZ EF (MC)
SUBTOTAL THIS SECTION					71 LB								
WESTBOUND ROADWAY - STAGE 4													
BACKWALL - EPOXY COATED													
ABE1301	13	2	6-9	27	2-11	0-11	2-11						VERT U-BARS
ABE1312	13	STR	2-0	5									HORIZ EF (MC)
ABE1313	13	STR	22-8	2									HORIZ RF
ABE1330	13	STR	24-4	3									HORIZ FF
ABE1331	13	STR	3-6	6									HORIZ EF CORNER
ABE1601	16	12	2-7	54	0-6	1-7.2	0-5.5	0-3.7					TIE HOOKS
ABE1603	16	2	6-7	7	2-10	0-11	2-10						VERT PPT
ABE1604	16	STR	5-10	13									DOWELS FF
ABE1605	16	STR	4-7	8									DOWELS RF
ABE1607	16	STR	2-10	3									VERT CORNER
ABE1608	16	2	12-1	4	4-7	2-11	4-7						HORIZ U-BARS
ABE1609	16	14	7-3	4	---	2-6	2-2.5	2-6	1-9				HORIZ FF
ABE1610	16	2	7-5	4	3-10	3-7	---						HORIZ RF
ABE1611	16	14	5-5	2	1-3	0-11	0-9	2-6	1-9				HORIZ FF
ABE1612	16	STR	4-7	2									HORIZ FF
ABE1613	16	STR	4-10	2									HORIZ RF
ABE1901	19	STR	3-11	54									DOWELS
ABE1902	19	35	5-3	27	1-1.7	0-6	0-11.7	1-6	1-2	0-4.2	0-4.2		VERT BRACKET
SUBTOTAL THIS SECTION					1215 LB								
HEADWALL - EPOXY COATED													
AHE1310	13	STR	2-0	6									HORIZ EF (MC)
AHE1311	13	STR	22-8	6									HORIZ EF
SUBTOTAL THIS SECTION					99 LB								
PARAPET - EPOXY COATED													
BPE1604	16	33	9-1	3	2-10	0-4	0-8.5	0-4	2-10	1-0			VERT PPT
BPE1605	16	33	7-1	4	2-3	0-4	0-5	0-4	2-3	0-9			1 SET OF 4
			TO		TO	TO	TO	TO	TO	TO			
			7-11		2-8	0-4	0-5	0-4	2-8	0-9			VERT PPT
BPE2201	22	STR	2-10	2									HORIZ PPT EF
BPE2202	22	STR	3-8	2									HORIZ PPT EF
BPE2203	22	STR	3-1	2									HORIZ PPT EF
BPE2501	25	STR	3-8	4									HORIZ PPT EF
SUBTOTAL THIS SECTION					139 LB								

BAR BENDING DIAGRAMS

ALL DIMENSIONS ARE OUT TO OUT OF BARS.

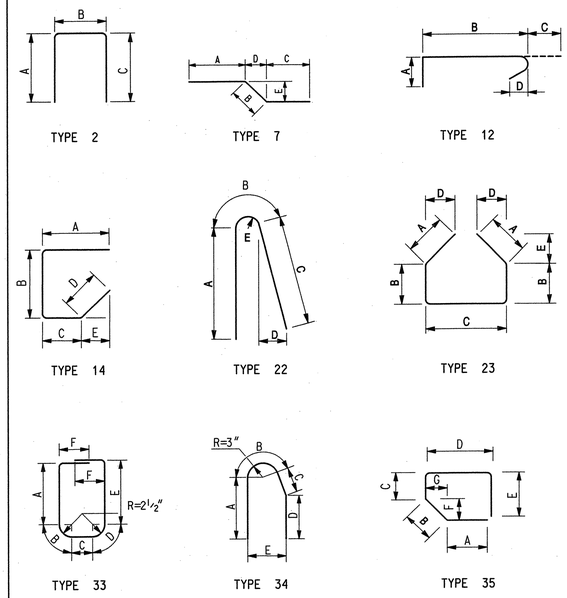

LEGEND:

F.F. - FRONT FACE
E.F. - EACH FACE
R.F. - REAR FACE
VERT - VERTICAL
HORIZ - HORIZONTAL
TRANS - TRANSVERSE
LONG - LONGITUDINAL
PPT - PARAPET

NOTE:

(MC) - MECHANICAL CONNECTOR REQUIRED AT STAGE LINE CONSTRUCTION JOINTS. ADJUST BAR DIMENSIONS TO SUIT CONNECTOR TYPE.

REVISION	BY	C'K'D	DATE

BRIDGE NO. 1

NEW JERSEY DEPARTMENT OF TRANSPORTATION
BUREAU OF STRUCTURAL ENGINEERING

BAR LIST I

ROUTE 80 BRIDGES OVER ROUTE 287
NORTHBOUND AND SMITH ROAD
CONTRACT NO. 043003714

DEWBERRY-GOODKIND, INC. COA# 24GA28047600

BRIAN D. JECKER, P.E. DATE 8-24-10
NEW JERSEY PROFESSIONAL ENGINEER LICENSE NO. 24GE04088600

BRIDGE SHEET NO. B-26 OF B-58

97/129

CONTROL SECTION		JOB NO.	
DES. BY	R. PAREJA	CHK. BY	T. STRNAD
DWN. BY	M. NAFIS		

IN CHARGE OF A. SESHADRI

Dewberry-Goodkind, Inc.
Bloomfield, N.J.

STATE	FEDERAL PROJECT NO.	SHEET	TOTAL SHEETS
N.J.	BR-080-5(094)		

STRUCTURE NO. **1414-168**

STRUCTURE NAME
ROUTE I-80 OVER ROUTE I-287
NORTHBOUND AND RAMPS D&H

EAST ABUTMENT

MARK	SIZE	TYPE	LENGTH	QTY	A	B	C	D	E	F	G	H	REMARKS
STAGE 1													
BACKWALL - EPOXY COATED													
ABE1301	13	2	6-9	48	2-11	0-11	2-11						VERT U-BARS
ABE1314	13	STR	19-4	5									HORIZ EF (MC)
ABE1315	13	STR	23-8	5									HORIZ EF
ABE1316	13	STR	4-4	5									HORIZ EF (MC)
ABE1327	13	2	6-11	3	2-6	1-6	2-11						VERT MEDIAN
ABE1601	16	12	2-7	102	0-6	1-7.2	0-5.5	0-3.7					TIE HOOKS
ABE1901	19	STR	3-11	102									DOWELS
ABE1902	19	35	5-3	51	1-1.7	0-6	0-11.7	1-6	1-2	0-4.2	0-4.2		VERT BRACKET
SUBTOTAL THIS SECTION					1666 LB								
HEADWALL - EPOXY COATED													
AHE1312	13	STR	19-4	6									HORIZ EF (MC)
AHE1313	13	STR	23-8	6									HORIZ EF
AHE1314	13	STR	4-4	6									HORIZ EF (MC)
AHE1324	13	2	4-7	3	1-5.5	1-8	1-5.5						HORIZ MEDIAN
AHE1325	13	23	7-4	3	1-3.2	1-6.5	1-9	0-8.7	1-0.5				VERT MEDIAN
SUBTOTAL THIS SECTION					214 LB								
MEDIAN BARRIER - EPOXY COATED													
BPE1301	13	22	5-2	3	2-4.5	0-4.5	2-4.5	0-6	0-1.5				VERT MEDIAN
BPE1302	13	STR	1-8	5									HORIZ MEDIAN
SUBTOTAL THIS SECTION					16 LB								
EASTBOUND ROADWAY - STAGE 2													
BACKWALL - EPOXY COATED													
ABE1301	13	2	6-9	10	2-11	0-11	2-11						VERT U-BARS
ABE1317	13	STR	5-10	10									HORIZ EF (MC)
ABE1601	16	12	2-7	20	0-6	1-7.2	0-5.5	0-3.7					TIE HOOKS
ABE1901	19	STR	3-11	20									DOWELS
ABE1902	19	35	5-3	10	1-1.7	0-6	0-11.7	1-6	1-2	0-4.2	0-4.2		VERT BRACKET
SUBTOTAL THIS SECTION					335 LB								
HEADWALL - EPOXY COATED													
AHE1315	13	STR	5-10	12									HORIZ EF (MC)
SUBTOTAL THIS SECTION					47 LB								
EASTBOUND ROADWAY - STAGE 3													
BACKWALL - EPOXY COATED													
ABE1301	13	2	6-9	16	2-11	0-11	2-11						VERT U-BARS
ABE1318	13	STR	8-8	10									HORIZ EF (MC)
ABE1601	16	12	2-7	32	0-6	1-7.2	0-5.5	0-3.7					TIE HOOKS
ABE1901	19	STR	3-11	32									DOWELS
ABE1902	19	35	5-3	16	1-1.7	0-6	0-11.7	1-6	1-2	0-4.2	0-4.2		VERT BRACKET
SUBTOTAL THIS SECTION					532 LB								
HEADWALL - EPOXY COATED													
AHE1316	13	STR	8-8	12									HORIZ EF (MC)
SUBTOTAL THIS SECTION					69 LB								
EASTBOUND ROADWAY - STAGE 4													
BACKWALL - EPOXY COATED													
ABE1301	13	2	6-9	26	2-11	0-11	2-11						VERT U-BARS
ABE1319	13	STR	2-1	5									HORIZ EF (MC)
ABE1320	13	STR	24-1	3									HORIZ FF
ABE1328	13	STR	22-5	2									HORIZ RF
ABE1331	13	STR	3-6	6									HORIZ EF CORNER
ABE1601	16	12	2-7	52	0-6	1-7.2	0-5.5	0-3.7					TIE HOOKS
ABE1603	16	2	6-7	7	2-10	0-11	2-10						VERT PPT
ABE1605	16	STR	4-7	8									DOWELS RF
ABE1606	16	STR	5-8	13									DOWELS FF
ABE1607	16	STR	2-10	3									VERT CORNER
ABE1608	16	2	12-1	4	4-7	2-11	4-7						HORIZ U-BARS
ABE1609	16	14	7-3	4	---	2-6	2-2.5	2-6	1-9				HORIZ FF
ABE1610	16	2	7-5	4	3-10	3-7	---						HORIZ RF
ABE1611	16	14	5-5	2	1-3	0-11	0-9	2-6	1-9				HORIZ FF
ABE1612	16	STR	4-7	2									HORIZ FF
ABE1613	16	STR	4-10	2									HORIZ RF
ABE1901	19	STR	3-11	52									DOWELS
ABE1902	19	35	5-3	26	1-1.7	0-6	0-11.7	1-6	1-2	0-4.2	0-4.2		VERT BRACKET
SUBTOTAL THIS SECTION					1183 LB								
HEADWALL - EPOXY COATED													
AHE1317	13	STR	2-1	6									HORIZ EF (MC)
AHE1318	13	STR	22-5	6									HORIZ EF
SUBTOTAL THIS SECTION					98 LB								

EAST ABUTMENT

MARK	SIZE	TYPE	LENGTH	QTY	A	B	C	D	E	F	G	H	REMARKS
PARPET - EPOXY COATED													
BPE1604	16	33	9-1	3	2-10	0-4	0-8.5	0-4	2-10	1-0			VERT PPT
BPE1605	16	33	7-1	4	2-3	0-4	0-5	0-4	2-3	0-9			1 SET OF 4
			TO		TO	TO	TO	TO	TO	TO			
			7-11		2-8	0-4	0-5	0-4	2-8	0-9			VERT PPT
BPE2201	22	STR	2-10	2									HORIZ PPT EF
BPE2202	22	STR	3-8	2									HORIZ PPT EF
BPE2203	22	STR	3-1	2									HORIZ PPT EF
BPE2501	25	STR	3-8	4									HORIZ PPT EF
SUBTOTAL THIS SECTION					139 LB								
WESTBOUND ROADWAY - STAGE 2													
BACKWALL - EPOXY COATED													
ABE1301	13	2	6-9	20	2-11	0-11	2-11						VERT U-BARS
ABE1321	13	STR	12-4	5									HORIZ EF (MC)
ABE1322	13	STR	5-10	5									HORIZ EF (MC)
ABE1601	16	12	2-7	40	0-6	1-7.2	0-5.5	0-3.7					TIE HOOKS
ABE1901	19	STR	3-11	40									DOWELS
ABE1902	19	35	5-3	20	1-1.7	0-6	0-11.7	1-6	1-2	0-4.2	0-4.2		VERT BRACKET
SUBTOTAL THIS SECTION					653 LB								
HEADWALL - EPOXY COATED													
AHE1319	13	STR	12-4	6									HORIZ EF (MC)
AHE1320	13	STR	5-10	6									HORIZ EF (MC)
SUBTOTAL THIS SECTION					73 LB								
WESTBOUND ROADWAY - STAGE 3													
BACKWALL - EPOXY COATED													
ABE1301	13	2	6-9	17	2-11	0-11	2-11						VERT U-BARS
ABE1323	13	STR	9-2	10									HORIZ EF (MC)
ABE1601	16	12	2-7	34	0-6	1-7.2	0-5.5	0-3.7					TIE HOOKS
ABE1901	19	STR	3-11	34									DOWELS
ABE1902	19	35	5-3	17	1-1.7	0-6	0-11.7	1-6	1-2	0-4.2	0-4.2		VERT BRACKET
SUBTOTAL THIS SECTION					565 LB								
HEADWALL - EPOXY COATED													
AHE1321	13	STR	9-2	12									HORIZ EF (MC)
SUBTOTAL THIS SECTION					73 LB								
WESTBOUND ROADWAY - STAGE 4													
BACKWALL - EPOXY COATED													
ABE1301	13	2	6-9	28	2-11	0-11	2-11						VERT U-BARS
ABE1324	13	STR	1-4	5									HORIZ EF (MC)
ABE1325	13	STR	24-5	2									HORIZ RF
ABE1326	13	STR	26-2	3									HORIZ FF
ABE1331	13	STR	3-6	6									HORIZ EF CORNER
ABE1601	16	12	2-7	56	0-6	1-7.2	0-5.5	0-3.7					TIE HOOKS
ABE1602	16	34	6-2	12	2-7.5	0-7.5	0-9.2	2-2	0-11				VERT PPT
ABE1605	16	STR	4-7	8									DOWELS RF
ABE1606	16	STR	5-8	13									DOWELS FF
ABE1607	16	STR	2-10	3									VERT CORNER
ABE1608	16	2	12-1	4	4-7	2-11	4-7						HORIZ U-BARS
ABE1609	16	14	7-3	4	---	2-6	2-2.5	2-6	1-9				HORIZ FF
ABE1610	16	2	7-5	4	3-10	3-7	---						HORIZ RF
ABE1611	16	14	5-5	2	1-3	0-11	0-9	2-6	1-9				HORIZ FF
ABE1612	16	STR	4-7	2									HORIZ FF
ABE1613	16	STR	4-10	2									HORIZ RF
ABE1901	19	STR	3-11	56									DOWELS
ABE1902	19	35	5-3	28	1-1.7	0-6	0-11.7	1-6	1-2	0-4.2	0-4.2		VERT BRACKET
SUBTOTAL THIS SECTION					1276 LB								
HEADWALL - EPOXY COATED													
AHE1322	13	STR	1-4	6									HORIZ EF (MC)
AHE1323	13	STR	24-5	6									HORIZ EF
SUBTOTAL THIS SECTION					103 LB								
PARAPET - EPOXY COATED													
BPE1601	16	33	8-5	3	2-11	0-4	0-5	0-4	2-11	0-9			VERT PPT
BPE1602	16	33	7-7	6	2-6	0-4	0-5	0-4	2-6	0-9			1 SET OF 6
			TO		TO	TO	TO	TO	TO	TO			
			8-3		2-10	0-4	0-5	0-4	2-10	0-9			VERT PPT
BPE1603	16	33	5-10	3	2-3	0-4	---	0-4	2-3	0-4			1 SET OF 3
			TO		TO	TO	TO	TO	TO	TO			
			7-3		2-5	0-4	0-4.5	0-4	2-5	0-8			VERT PPT
BPE2201	22	STR	2-10	2									HORIZ PPT EF
BPE2202	22	STR	3-8	2									HORIZ PPT EF
BPE2203	22	STR	3-1	2									HORIZ PPT EF
BPE2501	25	STR	3-8	2									HORIZ PPT RF
BPE2502	25	7	3-8	2	---	0-10.7	2-9.7	0-10.2	0-3.5				HORIZ PPT FF
SUBTOTAL THIS SECTION					176 LB								

BAR BENDING DIAGRAMS

ALL DIMENSIONS ARE OUT TO OUT OF BARS.

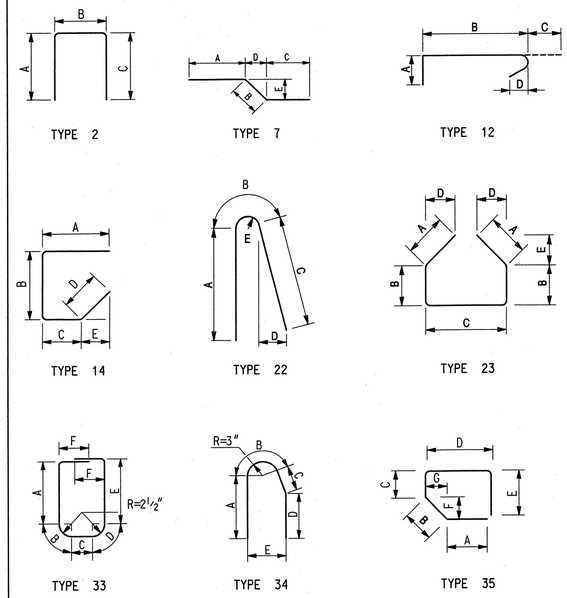

LEGEND:

F.F. - FRONT FACE
E.F. - EACH FACE
R.F. - REAR FACE
VERT - VERTICAL
HORIZ - HORIZONTAL
TRANS - TRANSVERSE
LONG - LONGITUDINAL
PPT - PARAPET

NOTE:

(MC) - MECHANICAL CONNECTOR REQUIRED AT STAGE LINE CONSTRUCTION JOINTS. ADJUST BAR DIMENSIONS TO SUIT CONNECTOR TYPE.

REVISION	BY	C'K'D	DATE

BRIDGE NO. 1

NEW JERSEY DEPARTMENT OF TRANSPORTATION
BUREAU OF STRUCTURAL ENGINEERING

BAR LIST II

ROUTE 80 BRIDGES OVER ROUTE 287
NORTHBOUND AND SMITH ROAD
CONTRACT NO. 043003714

DEWBERRY-GOODKIND, INC. COA# 24GA28047600

BRIAN D. JECKER, P.E. DATE 8-24-10
NEW JERSEY PROFESSIONAL ENGINEER LICENSE NO. 24GE04088600

BRIDGE SHEET NO. B-27 OF B-58

98/129

CONTROL SECTION		JOB NO.	
DES. BY	R. PAREJA	CHK. BY	T. STRNAD
DWN. BY	M. NAFIS		

IN CHARGE OF A. SESHADRI

Dewberry-Goodkind, Inc.
Bloomfield, N.J.

STATE	FEDERAL PROJECT NO.	SHEET	TOTAL SHEETS
N.J.	BR-080-5(094)		

STRUCTURE NO. **1414-168**

STRUCTURE NAME
ROUTE I-80 OVER ROUTE I-287
NORTHBOUND AND RAMPS D&H

DECK

MARK	SIZE	TYPE	LENGTH	QTY	A	B	C	D	E	F	G	H	REMARKS
STAGE 1													
DECK SLAB - EPOXY COATED													
SE1301	13	23	6-0	98	1-3.2	0-10.2	1-9	0-8.7	1-0.5				VERT MEDIAN
SE1303	13	STR	30-0	24									LONG HAUNCH
SE1304	13	STR	10-8	8									LONG HAUNCH
SE1602	16	STR	40-0	236									LONG TOP & BOT
SE1603	16	STR	17-5	118									LONG TOP & BOT
SE1604	16	1	22-7	156	22-0	0-7	0-5	0-5					TRANS TOP
SE1605	16	1	29-11	156	29-4	0-7	0-5	0-5					TRANS BOT
SE1609	16	STR	18-4	162									TRANS BOT
SE1610	16	STR	33-0	162									TRANS BOT
SE1638	16	13	4-3	360	0-8.5	0-10	1-0						TRANS HAUNCH
SE1642	16	15	5-3	108	0-11.7	0-11.5	3-4	---	0-6.2				LONG DECK END
SE1643	16	STR	6-10	24									TRANS DECK END
SUBTOTAL THIS SECTION				32495 LB									
MEDIAN BARRIER - EPOXY COATED													
SPE1301	13	22	5-1	98	2-4.2	0-4.5	2-4.2	0-6	0-1.5				VERT MEDIAN
SPE1302	13	STR	12-8	35									HORIZ MEDIAN
SUBTOTAL THIS SECTION				629 LB									
EASTBOUND ROADWAY - STAGE 2													
DECK SLAB - EPOXY COATED													
SE1303	13	STR	30-0	9									LONG HAUNCH
SE1304	13	STR	10-8	3									LONG HAUNCH
SE1602	16	STR	40-0	50									LONG TOP & BOT
SE1603	16	STR	17-5	25									LONG TOP & BOT
SE1606	16	1	10-2	156	9-7	0-7	0-5	0-5					TRANS TOP (MC)
SE1607	16	STR	9-7	162									TRANS BOT (MC)
SE1638	16	13	4-3	90	0-8.5	0-10	1-0						TRANS HAUNCH
SE1639	16	39	2-7	90	0-6.5	0-6.5	0-6.2	1-0	0-2				TRANS HAUNCH
SE1642	16	15	5-3	20	0-11.7	0-11.5	3-4	---	0-6.2				LONG DECK END
SE1644	16	STR	7-3	4									TRANS DECK END
SUBTOTAL THIS SECTION				6797 LB									
DECK SLAB - EPOXY COATED													
SE1303	13	STR	30-0	12									LONG HAUNCH
SE1304	13	STR	10-8	4									LONG HAUNCH
SE1602	16	STR	40-0	78									LONG TOP & BOT
SE1603	16	STR	17-5	39									LONG TOP & BOT
SE1608	16	STR	9-5	324									TRANS BOT (MC)
SE1638	16	13	4-3	90	0-8.5	0-10	1-0						TRANS HAUNCH
SE1639	16	39	2-7	180	0-6.5	0-6.5	0-6.2	1-0	0-2				TRANS HAUNCH
SE1642	16	15	5-3	38	0-11.7	0-11.5	3-4	---	0-6.2				LONG DECK END
SE1644	16	STR	7-3	8									TRANS DECK END
SE1646	16	STR	13-3	156									TRANS TOP (MC)
SE1647	16	STR	5-6	156									TRANS TOP (MC)
SUBTOTAL THIS SECTION				11618 LB									
EASTBOUND ROADWAY - STAGE 4													
DECK SLAB - EPOXY COATED													
SE1303	13	STR	30-0	15									LONG HAUNCH
SE1304	13	STR	10-8	5									LONG HAUNCH
SE1601	16	32	4-10	134	0-3	0-4.7	0-11.2	0-8	1-3.7	0-3.2	1-0	1-0.6	VERT PPT
SE1602	16	STR	40-0	132									LONG TOP & BOT
SE1603	16	STR	17-5	62									LONG TOP & BOT
SE1611	16	1	9-2	295	8-7	0-7	0-5	0-5					TRANS TOP
SE1612	16	STR	21-0	156									TRANS TOP (MC)
SE1635	16	STR	14-11	4									LONG T&B NOTCH
SE1636	16	1	7-6	8	6-11	0-7	0-5	0-5					TRANS TOP NOTCH
SE1637	16	STR	11-0	14									TRANS BOT NOTCH
SE1638	16	13	4-3	180	0-8.5	0-10	1-0						TRANS HAUNCH
SE1639	16	39	2-7	90	0-6.5	0-6.5	0-6.2	1-0	0-2				TRANS HAUNCH
SE1640	16	STR	4-0	56									LONG PPT JT
SE1641	16	2	7-3	24	3-4	0-6.5	3-4						TRANS PPT JT
SE1642	16	15	5-3	58	0-11.7	0-11.5	3-4	---	0-6.2				LONG DECK END
SE1644	16	STR	7-3	12									TRANS DECK END
SE1648	16	STR	20-3	74									TRANS BOT
SE1649	16	STR	9-5	74									TRANS BOT (MC)
SE1650	16	STR	17-2	88									TRANS BOT (MC)
SE1651	16	STR	12-8	74									TRANS BOT
SUBTOTAL THIS SECTION				20875 LB									
PARAPET - EPOXY COATED													
SPE1601	16	31	7-11	102	2-11	0-4	0-2.5	0-4.2	2-11	0-7	0-5	0-3.5	VERT PPT
SPE1602	16	33	7-11	16	2-11	0-4	0-2.5	0-4	2-11	0-7			VERT PPT
SPE1603	16	33	7-11	16	2-11	0-4	0-2.5	0-4	2-11	0-7			1 SET OF 16
			TO		TO	TO	TO	TO	TO	TO			
			8-11		2-11	0-4	0-6.5	0-4	2-11	0-11			VERT PPT
SPE2202	22	STR	9-8	8									HORIZ PPT
SPE2203	22	STR	9-6	20									HORIZ PPT
SPE2204	22	STR	8-4	4									HORIZ PPT
SPE2205	22	STR	8-0	4									HORIZ PPT
SPE2502	25	STR	9-8	8									HORIZ PPT
SPE2503	25	STR	9-6	20									HORIZ PPT
SPE2504	25	STR	8-4	4									HORIZ PPT
SPE2505	25	STR	8-0	4									HORIZ PPT
SUBTOTAL THIS SECTION				2684 LB									

DECK

MARK	SIZE	TYPE	LENGTH	QTY	A	B	C	D	E	F	G	H	REMARKS
WESTBOUND ROADWAY - STAGE 2													
DECK SLAB - EPOXY COATED													
SE1303	13	STR	30-0	15									LONG HAUNCH
SE1304	13	STR	10-8	5									LONG HAUNCH
SE1602	16	STR	40-0	92									LONG TOP & BOT
SE1603	16	STR	17-5	46									LONG TOP & BOT
SE1613	16	1	18-2	39	17-7	0-7	0-5	0-5					TRANS TOP (MC)
SE1614	16	1	18-4	39	17-9	0-7	0-5	0-5					TRANS TOP (MC)
SE1615	16	1	18-6	39	17-11	0-7	0-5	0-5					TRANS TOP (MC)
SE1616	16	1	18-8	39	18-1	0-7	0-5	0-5					TRANS TOP (MC)
SE1617	16	STR	17-7	42									TRANS BOT (MC)
SE1618	16	STR	17-9	39									TRANS BOT (MC)
SE1619	16	STR	17-11	39									TRANS BOT (MC)
SE1620	16	STR	18-1	42									TRANS BOT (MC)
SE1624	16	STR	7-9	4									TRANS DECK END
SE1638	16	13	4-3	180	0-8.5	0-10	1-0						TRANS HAUNCH
SE1639	16	39	2-7	90	0-6.5	0-6.5	0-6.2	1-0	0-2				TRANS HAUNCH
SE1642	16	15	5-3	40	0-11.7	0-11.5	3-4	---	0-6.2				LONG DECK END
SE1645	16	STR	7-5	4									TRANS DECK END
SUBTOTAL THIS SECTION				12343 LB									
WESTBOUND ROADWAY - STAGE 3													
DECK SLAB - EPOXY COATED													
SE1303	13	STR	30-0	12									LONG HAUNCH
SE1304	13	STR	10-8	4									LONG HAUNCH
SE1602	16	STR	40-0	80									LONG TOP & BOT
SE1603	16	STR	17-5	40									LONG TOP & BOT
SE1621	16	STR	9-8	162									TRANS BOT (MC)
SE1622	16	STR	9-10	162									TRANS BOT (MC)
SE1624	16	STR	7-9	4									TRANS DECK END
SE1638	16	13	4-3	90	0-8.5	0-10	1-0						TRANS HAUNCH
SE1639	16	39	2-7	180	0-6.5	0-6.5	0-6.2	1-0	0-2				TRANS HAUNCH
SE1642	16	15	5-3	40	0-11.7	0-11.5	3-4	---	0-6.2				LONG DECK END
SE1645	16	STR	7-5	4									TRANS DECK END
SE1652	16	STR	13-8	78									TRANS TOP (MC)
SE1653	16	STR	5-8	78									TRANS TOP (MC)
SE1654	16	STR	14-0	78									TRANS TOP (MC)
SE1655	16	STR	5-9	78									TRANS TOP (MC)
SUBTOTAL THIS SECTION				11974 LB									
WESTBOUND ROADWAY - STAGE 4													
DECK SLAB - EPOXY COATED													
SE1303	13	STR	30-0	3									LONG HAUNCH
SE1304	13	STR	10-8	1									LONG HAUNCH
SE1601	16	32	4-10	137	0-3	0-4.7	0-11.2	0-8	1-3.7	0-3.2	1-0	1-0.6	VERT PPT
SE1602	16	STR	40-0	136									LONG TOP & BOT
SE1603	16	STR	17-5	64									LONG TOP & BOT
SE1623	16	1	9-7	295	9-0	0-7	0-5	0-5					TRANS TOP
SE1624	16	STR	7-9	6									TRANS DECK END
SE1625	16	STR	21-9	78									TRANS TOP (MC)
SE1627	16	STR	22-2	78									TRANS TOP (MC)
SE1628	16	STR	17-9	44									TRANS BOT (MC)
SE1629	16	STR	12-11	37									TRANS BOT
SE1630	16	STR	21-0	37									TRANS BOT
SE1631	16	1	7-11	8	7-4	0-7	0-5	0-5					TRANS TOP NOTCH
SE1633	16	STR	11-3	7									TRANS BOT NOTCH
SE1634	16	STR	11-5	7									TRANS BOT NOTCH
SE1635	16	STR	14-11	4									LONG T&B NOTCH
SE1639	16	39	2-7	90	0-6.5	0-6.5	0-6.2	1-0	0-2				TRANS HAUNCH
SE1640	16	STR	4-0	56									LONG PPT JT
SE1641	16	2	7-3	24	3-4	0-6.5	3-4						TRANS PPT JT
SE1642	16	15	5-3	58	0-11.7	0-11.5	3-4	---	0-6.2				LONG DECK END
SE1645	16	STR	7-5	6									TRANS DECK END
SE1656	16	STR	9-8	37									TRANS BOT (MC)
SE1657	16	STR	21-4	37									TRANS BOT
SE1658	16	STR	9-10	37									TRANS BOT (MC)
SE1659	16	STR	18-1	44									TRANS BOT (MC)
SE1660	16	STR	13-1	37									TRANS BOT
SUBTOTAL THIS SECTION				20514 LB									
PARAPET - EPOXY COATED													
SPE1601	16	31	7-11	105	2-11	0-4	0-2.5	0-4.2	2-11	0-7	0-5	0-3.5	VERT PPT
SPE1602	16	33	7-11	16	2-11	0-4	0-2.5	0-4	2-11	0-7			VERT PPT
SPE1603	16	33	7-11	16	2-11	0-4	0-2.5	0-4	2-11	0-7			1 SET OF 16
			TO		TO	TO	TO	TO	TO	TO			
			8-11		2-11	0-4	0-6.5	0-4	2-11	0-11			VERT PPT
SPE2201	22	STR	9-2	28									HORIZ PPT
SPE2202	22	STR	9-8	8									HORIZ PPT
SPE2501	25	STR	9-2	28									HORIZ PPT
SPE2502	25	STR	9-8	8									HORIZ PPT
SUBTOTAL THIS SECTION				2715 LB									

BAR BENDING DIAGRAMS

ALL DIMENSIONS ARE OUT TO OUT OF BARS.

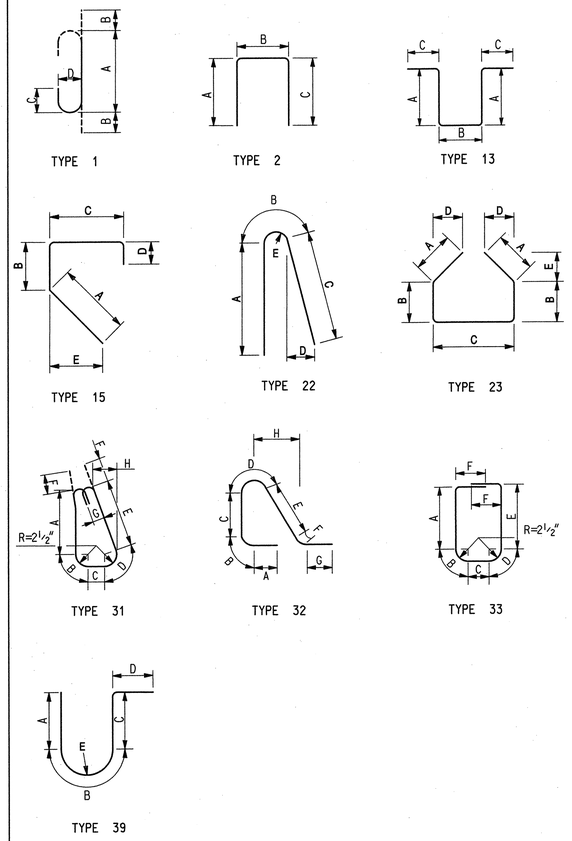

LEGEND:

F.F. - FRONT FACE
E.F. - EACH FACE
R.F. - REAR FACE
VERT - VERTICAL
HORIZ - HORIZONTAL
TRANS - TRANSVERSE
LONG - LONGITUDINAL
PPT - PARAPET

NOTE:

(MC) - MECHANICAL CONNECTOR REQUIRED AT STAGE LINE CONSTRUCTION JOINTS. ADJUST BAR DIMENSIONS TO SUIT CONNECTOR TYPE.

REVISION	BY	C'K'D	DATE

BRIDGE NO. 1

NEW JERSEY DEPARTMENT OF TRANSPORTATION
BUREAU OF STRUCTURAL ENGINEERING

BAR LIST III

ROUTE 80 BRIDGES OVER ROUTE 287
NORTHBOUND AND SMITH ROAD
CONTRACT NO. 043003714

DEWBERRY-GOODKIND, INC. COA# 24GA28047600

BRIAN D. JECKER, P.E. DATE 8-24-10
NEW JERSEY PROFESSIONAL ENGINEER LICENSE NO. 24GE04088600

BRIDGE SHEET NO. B-28 OF B-58

99
129

CONTROL SECTION		JOB NO.	
DES. BY	R. PAREJA	CHK. BY	T. STRNAD
DWN. BY	M. NAFIS		

IN CHARGE OF A. SESHADRI

Dewberry-Goodkind, Inc.
Bloomfield, N.J.

STATE	FEDERAL PROJECT NO.	SHEET	TOTAL SHEETS
N.J.	BR-080-5(094)		

STRUCTURE NO. 1414-169

STRUCTURE NAME
ROUTE I-80 OVER SMITH ROAD

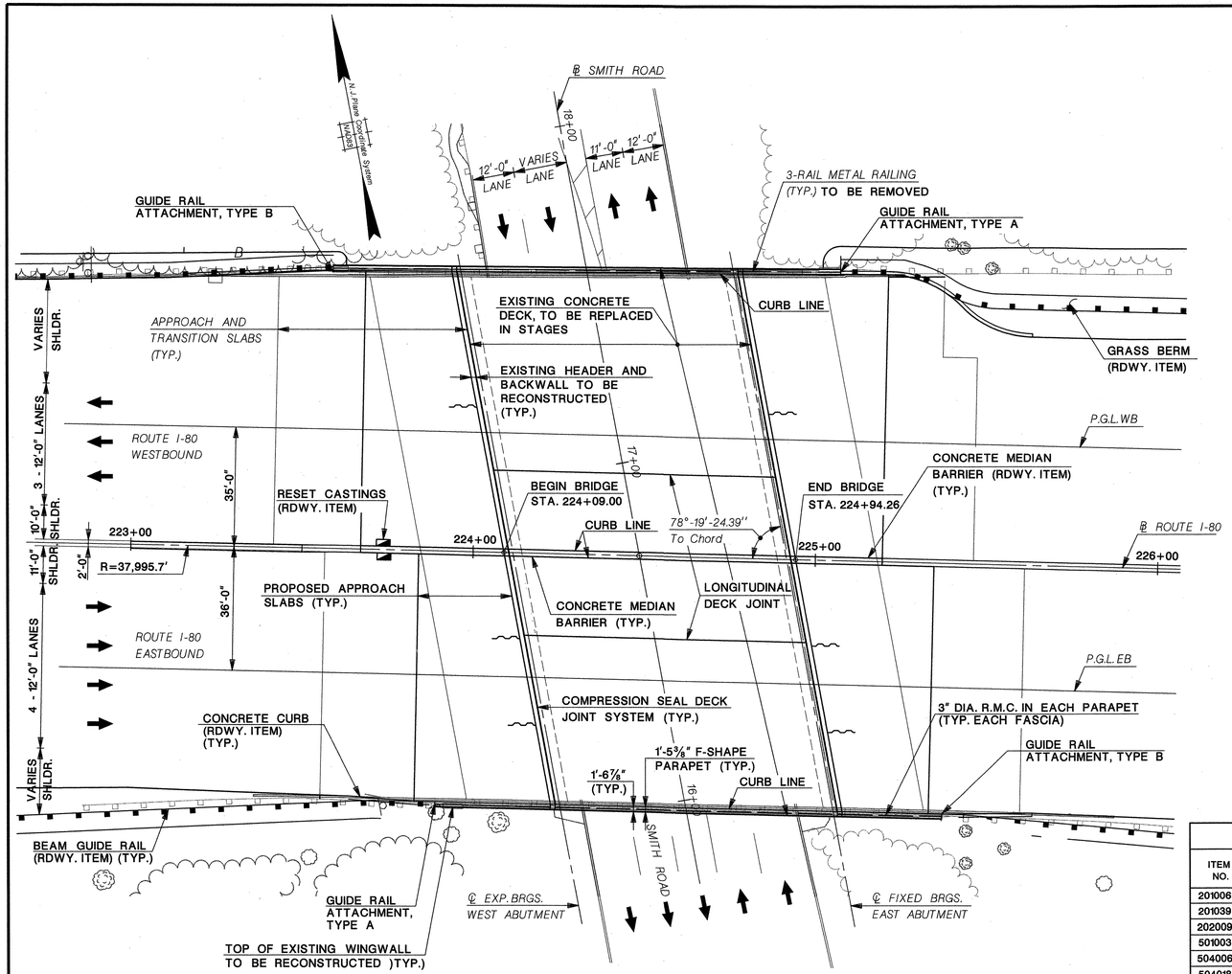

PLAN
SCALE: 1"=20'-0"

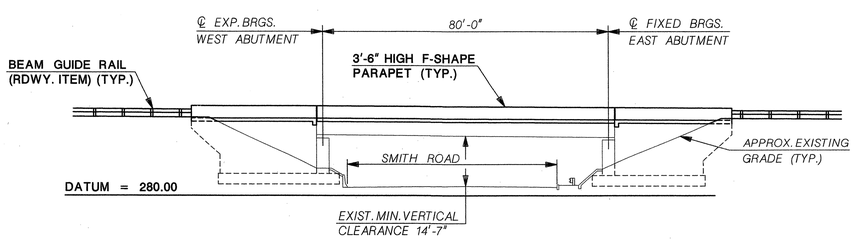

ELEVATION
SCALE: 1"=20'-0"

INDEX OF BRIDGE SHEETS

BRIDGE SHEET NO.	TITLE
B-29	GENERAL PLAN AND ELEVATION
B-30	TYPICAL SECTIONS
B-31	PROFILES
B-32	CONSTRUCTION STAGING
B-33	WEST ABUTMENT PLAN AND ELEVATION I
B-34	WEST ABUTMENT PLAN AND ELEVATION II
B-35	EAST ABUTMENT PLAN AND ELEVATION I
B-36	EAST ABUTMENT PLAN AND ELEVATION II
B-37	WINGWALL ELEVATIONS
B-38	ABUTMENT SECTIONS
B-39	SUBSTRUCTURE PAY LIMITS AND DETAILS
B-40	DECK PLAN I
B-41	DECK PLAN II
B-42	DECK PLAN III
B-43	DECK SECTION
B-44	PARAPET DETAILS
B-45	DECK AND APPROACH SLAB GRADING PLAN
B-46	DECK JOINT DETAILS I
B-47	DECK JOINT DETAILS II
B-48	SUPERSTRUCTURE DEMOLITION PLAN
B-49	ABUTMENT DEMOLITION PLAN
B-50	WINGWALL DEMOLITION PLAN
B-51	BAR LIST I
B-52	BAR LIST II
B-53	BAR LIST III
B-54	BAR LIST IV
B-55	BRIDGE APPROACH SLAB
B-56	STEEL TRUSS DETAILS
B-57	TOWER SHAFT BASE AND TRUSS SEAT DETAILS
B-58	SIGN AND LIGHTING SYSTEM SUPPORT DETAILS

GENERAL NOTES:

1. DESIGN SPECIFICATIONS:
   AASHTO LRFD BRIDGE DESIGN SPECIFICATIONS, 4TH EDITION, 2007 WITH 2008 INTERIMS, AS MODIFIED BY SECTION 3 OF THE NJDOT DESIGN MANUAL FOR BRIDGES AND STRUCTURES, 4TH EDITION (2002).
2. CONSTRUCTION SPECIFICATIONS:
   NJDOT STANDARD SPECIFICATIONS FOR ROAD AND BRIDGE CONSTRUCTION, 2007, AS MODIFIED BY THE SPECIAL PROVISIONS.
3. LIVE LOAD:
   AASHTO LRFD HL-93 VEHICULAR LIVE LOADING OR NJDOT PERMIT VEHICLE, WHICHEVER GOVERNS.
4. CONCRETE COMPRESSIVE STRESSES:
   (a) DESIGN COMPRESSIVE STRENGTH - f'c
   C-I-P APPROACH:
   CLASS A ..... 4,000 PSI
   C-I-P ABUTMENTS, WINGWALLS:
   CLASS B ..... 3,000 PSI
   C-I-P DECK SLABS, PARAPETS:
   HPC-1 ..... 4,000 PSI
   (THE RETEST LIMIT FOR NON-PAY-ADJUSTMENT ITEMS SHALL BE AS SPECIFIED IN TABLE 903.03-06.4 OF THE NJDOT STANDARD SPECIFICATIONS AND AS MAY BE MODIFIED BY THE SPECIAL PROVISIONS).
   (b) CLASS MIX DESIGN STRENGTHS
   CLASS A ..... 4,600 PSI
   CLASS B ..... 3,700 PSI
   HPC-1 ..... IN ACCORDANCE WITH THE DESIGN AND VERIFICATION REQUIREMENTS SPECIFIED IN NJDOT STANDARD SPECIFICATIONS SECTION 903.05.
5. REINFORCEMENT STEEL:
   ASTM A615M (GRADE 60)
6. EXISTING PLANS
   PLANS OF THE EXISTING STRUCTURE ARE AVAILABLE FOR INSPECTION AT THE OFFICE OF QUALITY MANAGEMENT SERVICES, ENGINEERING DOCUMENTS UNIT, NEW JERSEY DEPARTMENT OF TRANSPORTATION.

   VERIFY ALL EXISTING INFORMATION IN THE FIELD BEFORE SUBMITTING A BID AND COMMENCING CONSTRUCTION.

SUMMARY OF QUANTITIES

ITEM NO.	DESCRIPTION	UNIT	CONTRACT QUANTITY
201006P	CLEARING SITE, BRIDGE (STRUCTURE NO. 1414-169)	LUMP SUM	LUMP SUM
201039P	TEMPORARY SHIELDING	LUMP SUM	LUMP SUM
202009P	EXCAVATION, UNCLASSIFIED	C.Y.	330
501003P	TEMPORARY SHEETING	S.F.	380
504006P	REINFORCEMENT STEEL, EPOXY COATED	LBS.	130,898
504018P	CONCRETE WINGWALL	C.Y.	14
504024P	CONCRETE ABUTMENT WALL	C.Y.	80
507006P	2½" X 2½" PREFORMED ELASTOMERIC JOINT ASSEMBLY	L.F.	325
507024P	CONCRETE BRIDGE DECK, HPC	C.Y.	435
507039P	CONCRETE BRIDGE PARAPET, HPC	L.F.	302
507048M	24" BY 32" CONCRETE BARRIER CURB, BRIDGE	L.F.	87
507051P	CONCRETE BRIDGE APPROACH	C.Y.	575
701021P	3" RIGID METALLIC CONDUIT	L.F.	322

REFERENCES:
1. FOR TYPICAL BRIDGE AND APPROACH ROADWAY SECTIONS, SEE SHEET NO. B-30.
2. FOR PROFILES, SEE SHEET NO. B-31.
3. FOR BRIDGE CONSTRUCTION STAGING SECTION, SEE SHEET NO. B-32.
4. FOR APPROACH SLAB DETAILS, SEE SHEET NO. B-55.

LEGEND:
➡ - DIRECTION OF TRAVEL
~~ - TEMPORARY SHEETING
R.M.C. - RIGID METALLIC CONDUIT

1"=20' 20 0 20 40

REVISION	BY	C'K'D	DATE

BRIDGE NO. 2

NEW JERSEY DEPARTMENT OF TRANSPORTATION
BUREAU OF STRUCTURAL ENGINEERING

GENERAL PLAN AND ELEVATION

ROUTE 80 BRIDGES OVER ROUTE 287 NORTHBOUND AND SMITH ROAD
CONTRACT NO. 043003714

DEWBERRY-GOODKIND, INC. COA# 24GA28047600
BRIAN D. JECKER, P.E. DATE 8-24-10
NEW JERSEY PROFESSIONAL ENGINEER LICENSE. NO. 24GE04088600

BRIDGE SHEET NO. B-29 OF B-58

CONTROL SECTION		JOB NO.	
DES. BY	J. SMITH	CHK. BY	B. JECKER
DWN. BY	A. BETANCOURT		

IN CHARGE OF J. SMITH

Dewberry-Goodkind, Inc.
Bloomfield, N.J.

STATE	FEDERAL PROJECT NO.	SHEET	TOTAL SHEETS
N.J.	BR-080-5(094)		

STRUCTURE NO. **1414-169**

STRUCTURE NAME
ROUTE I-80 OVER SMITH ROAD

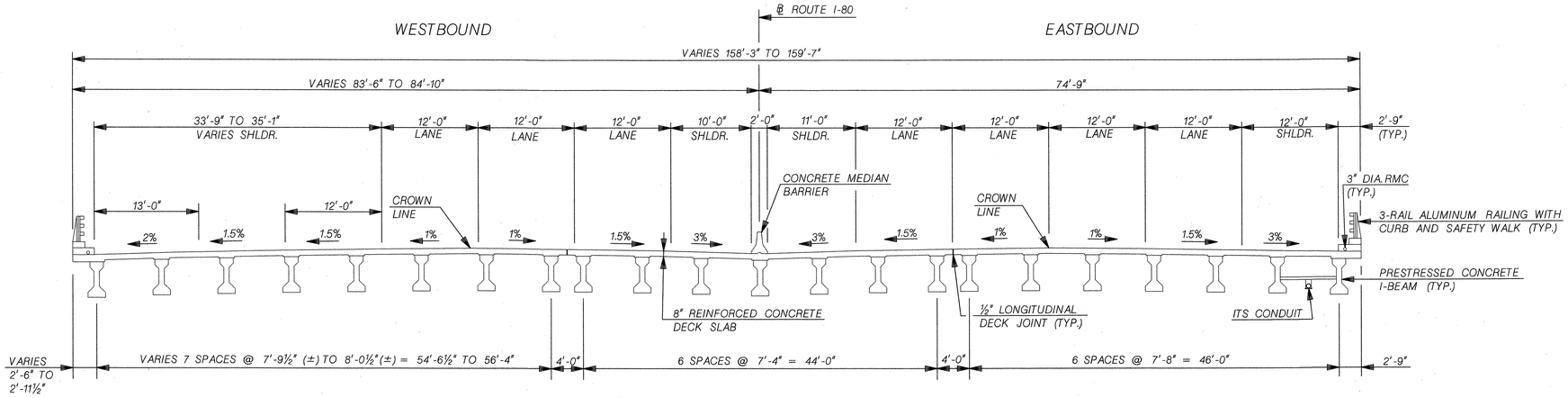

EXISTING BRIDGE SECTION

SCALE: ⅛"=1'-0"

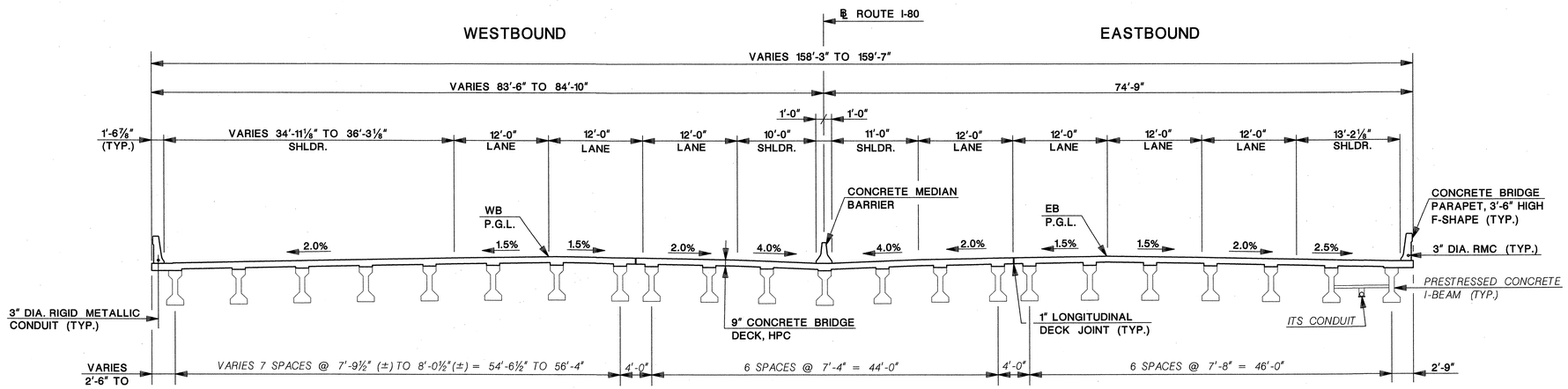

PROPOSED BRIDGE SECTION

SCALE: ⅛"=1'-0"

NOTE:

1. ALL TYPICAL SECTIONS ARE LOOKING EAST (UPSTATION).

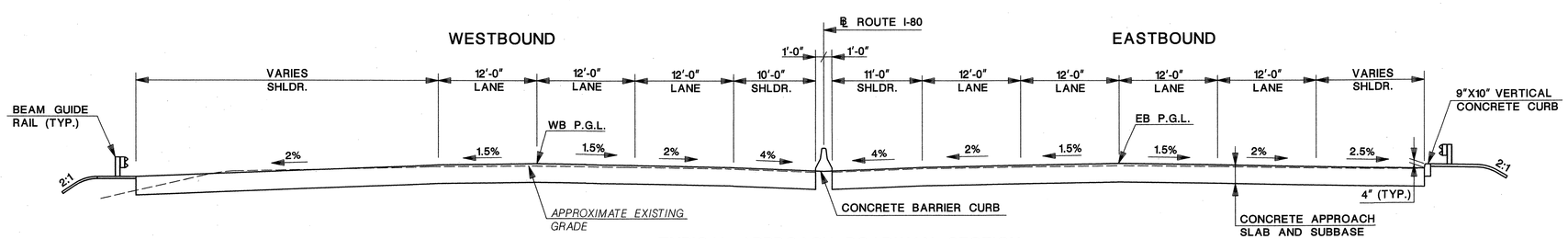

TYPICAL APPROACH ROADWAY SECTION

SCALE: ⅛"=1'-0"

⅛"=1'-0" 8 0 8 16

REVISION	BY	C'K'D	DATE

CONTROL SECTION		JOB NO.
DES. BY	P. HULYALKAR	CHK. BY J. SMITH
DWN. BY	A.BETANCOURT	

IN CHARGE OF J. SMITH

BRIDGE NO. 2

NEW JERSEY DEPARTMENT OF TRANSPORTATION
BUREAU OF STRUCTURAL ENGINEERING

TYPICAL SECTIONS

ROUTE 80 BRIDGES OVER ROUTE 287
NORTHBOUND AND SMITH ROAD
CONTRACT NO. 043003714

DEWBERRY-GOODKIND, INC. COA# 24GA28047600

BRIAN D. JECKER, P.E. DATE 8-24-10
NEW JERSEY PROFESSIONAL ENGINEER LICENSE. NO. 24GE04088600

BRIDGE SHEET NO. B-30 OF B-58

101
129

Dewberry-Goodkind, Inc.
Bloomfield, N.J.

tfelcone 8/20/2010 10:17:40 AM OceTDS700-BW.plt 30-Scale 3056-REDECKING-Route80-287-Q18,3056\Redecking\CAD\Struct\Bridge2\BR2-TYPSECT.dgn

STATE	FEDERAL PROJECT NO.	SHEET	TOTAL SHEETS
N.J.	BR-080-5(094)		

STRUCTURE NO. 1414-169

STRUCTURE NAME
ROUTE I-80 OVER SMITH ROAD

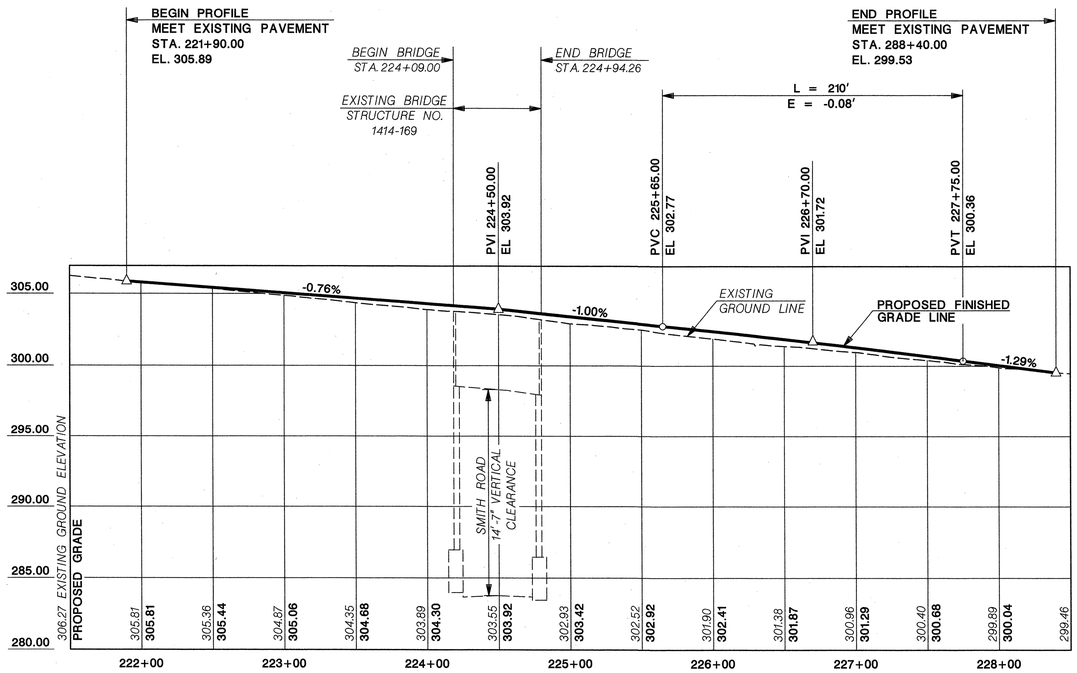

PROFILE - ROUTE I-80 EASTBOUND
SCALE: 1"=50' H
1"=5' V

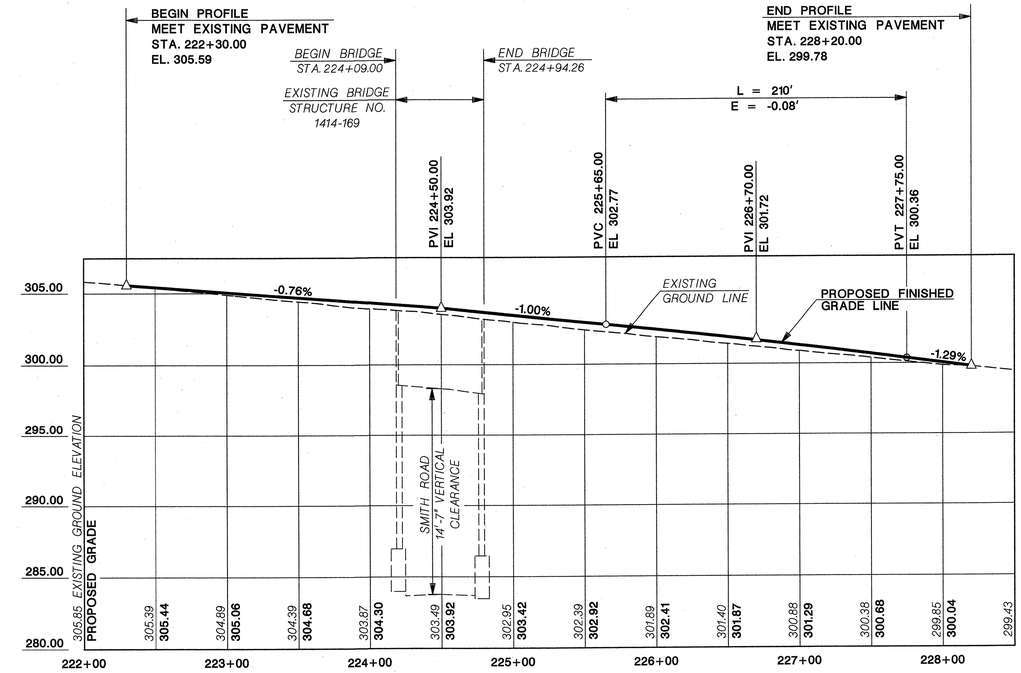

PROFILE - ROUTE I-80 WESTBOUND
SCALE: 1"=50' H
1"=5' V

1"=50' 50 0 50 100

1"=5' 5 0 5 10

REVISION	BY	C'K'D	DATE

CONTROL SECTION		JOB NO.	
DES. BY	W. LANG	CHK. BY	J. SMITH
DWN. BY	A.BETANCOURT		

IN CHARGE OF J. SMITH

BRIDGE NO. 2

NEW JERSEY DEPARTMENT OF TRANSPORTATION
BUREAU OF STRUCTURAL ENGINEERING

PROFILES

ROUTE 80 BRIDGES OVER ROUTE 287
NORTHBOUND AND SMITH ROAD
CONTRACT NO. 043003714

DEWBERRY-GOODKIND, INC. COA# 24GA28047600

BRIAN D. JECKER, P.E. DATE 8-24-10
NEW JERSEY PROFESSIONAL ENGINEER LICENSE. NO. 24GE04088600

BRIDGE SHEET NO. B-31 OF B-58

102
129

Dewberry-Goodkind, Inc.
Bloomfield, N.J.

tfelcone 8/20/2010 10:17:43 AM OceTDS700-BW.plt 30-Scale 3056-REDECKING-Route80-287-Q18,3056\Redecking\CAD\Struct\Bridge2\BR2-PROFILE.dgn

STATE	FEDERAL PROJECT NO.	SHEET	TOTAL SHEETS
N.J.	BR-080-5(094)		

STRUCTURE NO. 1414-169

STRUCTURE NAME ROUTE I-80 OVER SMITH ROAD

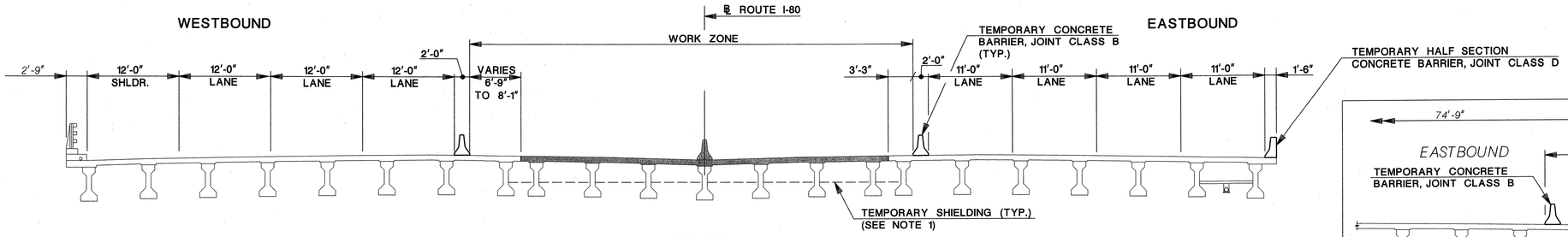

STAGE 1
SCALE: 1/8" = 1'-0"

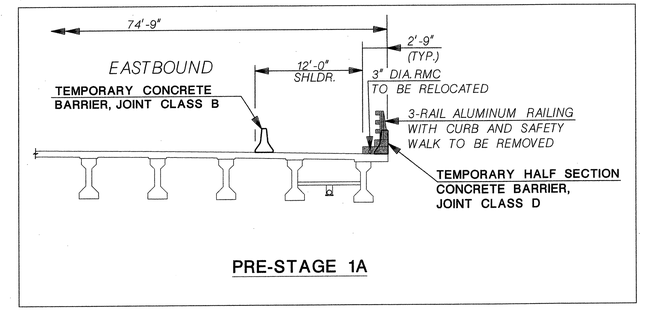

PRE-STAGE 1A

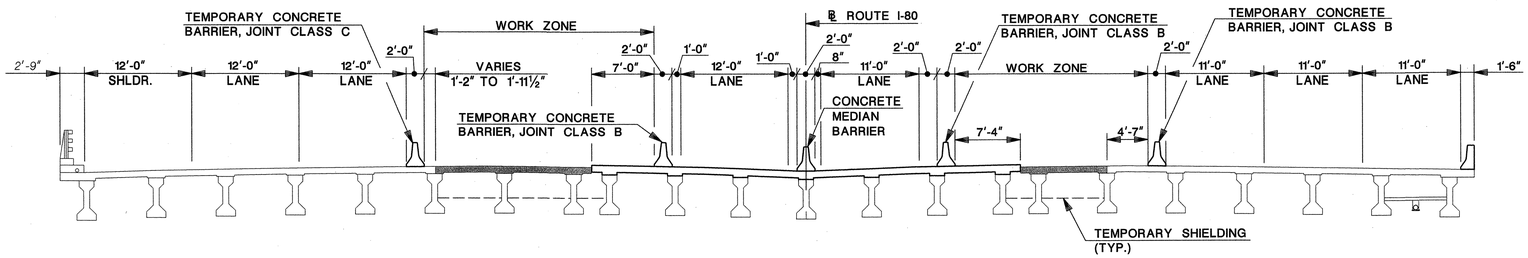

STAGE 2
SCALE: 1/8" = 1'-0"

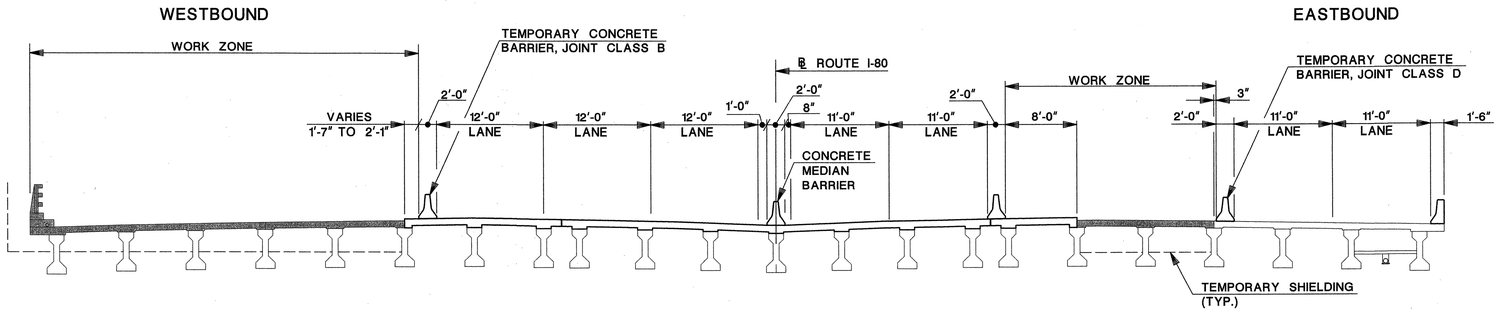

STAGE 3
SCALE: 1/8" = 1'-0"

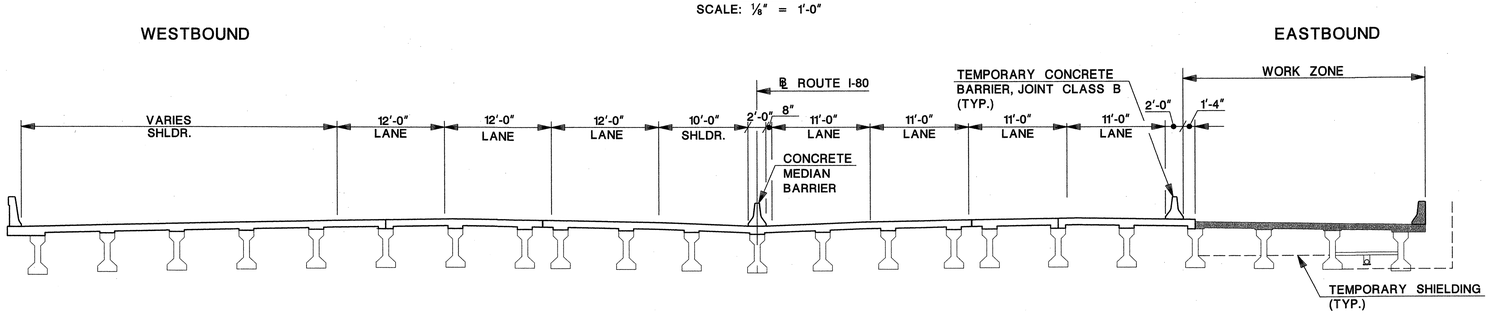

STAGE 4
SCALE: 1/8" = 1'-0"

NOTE:

1. INSTALL TEMPORARY SHIELDING BEFORE BEGINNING DEMOLITION.
2. SAW CUT BRIDGE DECK AT STAGE LINE CONSTRUCTION JOINTS. THE COST FOR SAW CUTTING SHALL BE INCLUDED IN THE ITEM, "CLEARING SITE BRIDGE".
3. IN STAGE 3, THE USE OF A WORK BRIDGE FOR FINISHING THE DECK CONCRETE MAY NOT BE FEASIBLE. SUBMIT ALTERNATIVE METHODS OF FINISHING TO THE RE FOR APPROVAL.
4. PROTECT EXISTING ITS CONDUIT AND SUPPORTS DURING STAGING.

LEGEND:

EXISTING STRUCTURE TO BE REMOVED

BRIDGE NO. 2

NEW JERSEY DEPARTMENT OF TRANSPORTATION
BUREAU OF STRUCTURAL ENGINEERING

CONSTRUCTION STAGING

ROUTE 80 BRIDGES OVER ROUTE 287 NORTHBOUND AND SMITH ROAD
CONTRACT NO. 043003714

DEWBERRY-GOODKIND, INC. COA# 24GA28047600

BRIAN D. JECKER, P.E. 8-24-10 DATE

NEW JERSEY PROFESSIONAL ENGINEER LICENSE. NO. 24GE04088600

BRIDGE SHEET NO. B-32 OF B-58

103/129

CONTROL SECTION		JOB NO.	
DES. BY	J. GASS	CHK. BY	J. SMITH
DWN. BY	M. NAFIS		
IN CHARGE OF J. SMITH			

1/8"=1'-0" 8 0 8 16

REVISION	BY	C'K'D	DATE

Dewberry-Goodkind, Inc.
Bloomfield, N.J.

tfelcone 8/20/2010 10:17:45 AM OceTDS700-BW.plt 30-Scale 3056-REDECKING-Route80-287-GB,3056\Redecking\CAD\Struct\Bridge2\BR2-STAGE.dgn

STATE	FEDERAL PROJECT NO.	SHEET	TOTAL SHEETS
N.J.	BR-080-5(094)		

STRUCTURE NO. 1414-169

STRUCTURE NAME
ROUTE I-80 OVER SMITH ROAD

N.J. Plane Coordinate System NAD83

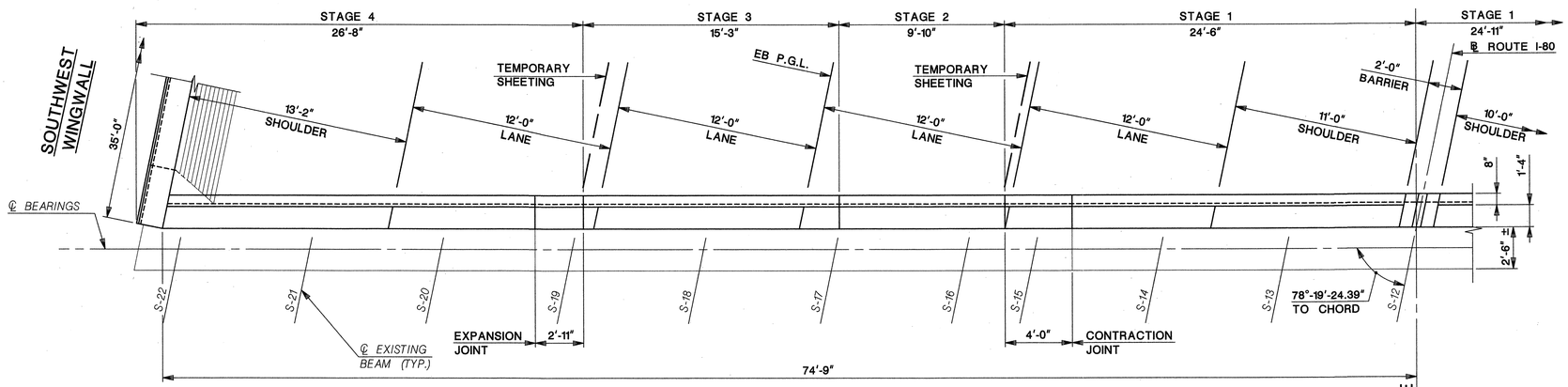

PLAN

SCALE ¼" = 1'-0"

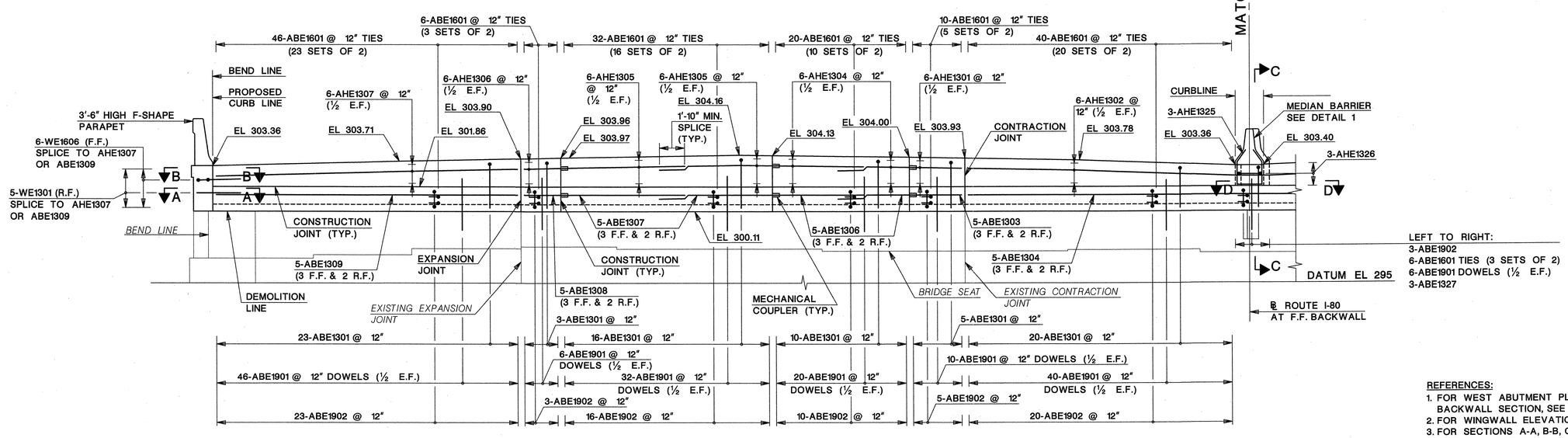

ELEVATION

SCALE ¼" = 1'-0"

REFERENCES:
1. FOR WEST ABUTMENT PLAN AND ELEVATION II AND TYPICAL BACKWALL SECTION, SEE SHEET NO. B-34.
2. FOR WINGWALL ELEVATIONS, SEE SHEET NO. B-37.
3. FOR SECTIONS A-A, B-B, C-C, D-D AND DETAIL 1, SEE SHEET NO. B-38.
4. FOR PAY LIMIT DETAILS, SEE SHEET NO. B-39.
5. FOR PARAPET DETAILS, SEE SHEET NO. B-44.
6. FOR ABUTMENT DEMOLITION PLAN, SEE SHEET NO. B-49.
7. FOR BAR LIST, SEE SHEET NO. B-51.

NOTES:
1. EPOXY COAT ALL REINFORCEMENT STEEL.
2. CORE HOLES FOR DOWELS INTO EXISTING CONCRETE AND FILL WITH WITHEPOXY GROUT. INCLUDE THE COST OF DRILLING & GROUTING INTO EXISTING CONCRETE UNDER THE PAY ITEM "CONCRETE ABUTMENT WALL".
3. CLEAN & ROUGHEN BY SAND BLASTING ALL SURFACES OF EXISTING CONCRETE TO BE IN CONTACT WITH NEW CONCRETE AND ALL EXPOSED REINFORCEMENT STEEL. CONCRETE SURFACE SHALL BE CLEAN AND FREE OF LAITANCE WITH THE SURFACE ROUGHENED TO A MINIMUM AMPLITUDE OF ¼" MINIMUM BEFORE PLACING CONCRETE. INCLUDE ALL COSTS UNDER THE PAY ITEM "CONCRETE ABUTMENT WALL".
4. USE MECHANICAL COUPLERS AT STAGE LINE CONSTRUCTION JOINTS AS SHOWN. COUPLERS SHALL CONFORM TO SUBSECTION 905.04. INCLUDE THE COST OF THE COUPLERS IN THE ITEM "REINFORCEMENT STEEL, EPOXY COATED".

LEGEND:
F.F. - FRONT FACE
R.F. - REAR FACE
E.F. - EACH FACE

QUANTITIES

ITEM NO.	DESCRIPTION	UNIT	CONTRACT QUANTITY
202009P	EXCAVATION, UNCLASSIFIED	C.Y.	130
501003P	TEMPORARY SHEETING	S.F.	190
504008P	REINFORCEMENT STEEL EPOXY COATED	LBS.	6,156
504024P	CONCRETE ABUTMENT WALL	C.Y.	40
507039P	CONCRETE BRIDGE PARAPET, HPC	L.F.	8
507048M	24" BY 32" CONCRETE BARRIER CURB, BRIDGE	L.F.	2
701021P	3" RIGID METALLIC CONDUIT	L.F.	8

REVISION	BY	C'K'D	DATE

½"=1'-0" 1 6" 0 2 4

¼"=1'-0" 4 0 4 8

BRIDGE NO. 2

NEW JERSEY DEPARTMENT OF TRANSPORTATION
BUREAU OF STRUCTURAL ENGINEERING

WEST ABUTMENT PLAN & ELEVATION I

ROUTE 80 BRIDGES OVER ROUTE 287
NORTHBOUND AND SMITH ROAD
CONTRACT NO. 043003714

DEWBERRY-GOODKIND, INC. COA# 24GA28047600

BRIAN D. JECKER, P.E. DATE 8-24-10
NEW JERSEY PROFESSIONAL ENGINEER LICENSE NO. 24GE04088600

BRIDGE SHEET NO. B-33 OF B-58

104
129

CONTROL SECTION		JOB NO.	
DES. BY	R. GANDIA	CHK. BY	B. JECKER
DWN. BY	M. NAFIS		

IN CHARGE OF J. SMITH

Dewberry-Goodkind, Inc.
Bloomfield, N.J.

STATE	FEDERAL PROJECT NO.	SHEET	TOTAL SHEETS
N.J.	BR-080-5(094)		

STRUCTURE NO. 1414-169

STRUCTURE NAME
ROUTE I-80 OVER SMITH ROAD

N.J. Plane Coordinate System NAD83

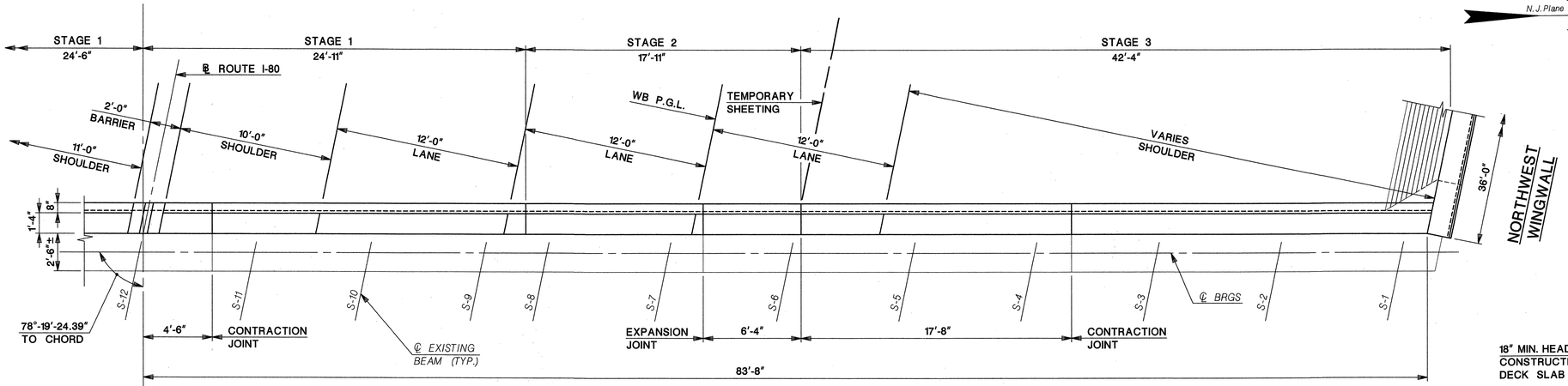

PLAN
SCALE 1/4" = 1'-0"

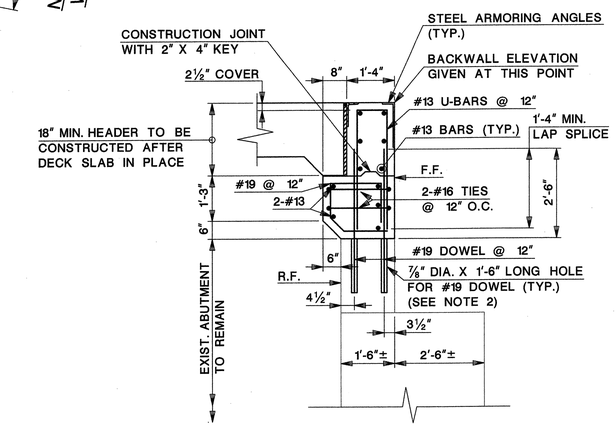

TYPICAL BACKWALL SECTION
SCALE: 1/2" = 1'-0"

MATCH LINE

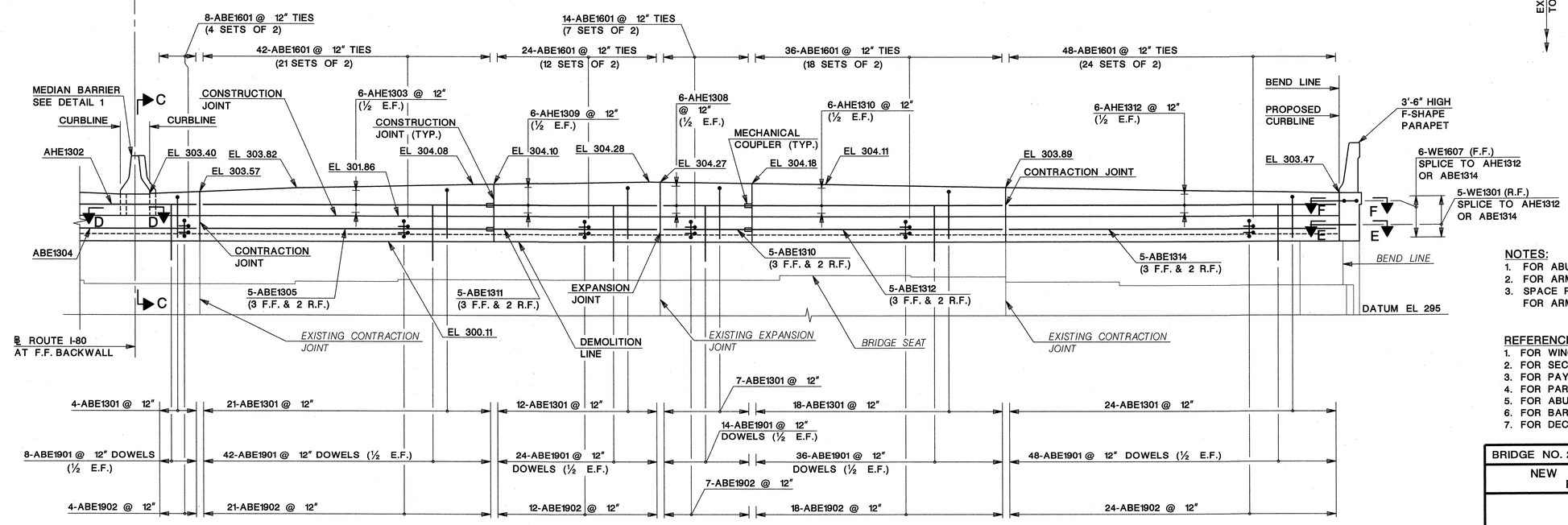

ELEVATION
SCALE 1/4" = 1'-0"

NOTES:
1. FOR ABUTMENT NOTES, SEE SHEET NO. B-33.
2. FOR ARMORING ANGLES, SEE DECK JOINT DETAILS
3. SPACE REINFORCEMENT IN HEADER TO CLEAR STUDS FOR ARMORING ANGLES.

REFERENCES:
1. FOR WINGWALL ELEVATIONS, SEE SHEET NO. B-37.
2. FOR SECTIONS C-C, D-D, E-E, F-F AND DETAIL 1, SEE SHEET NO. B-38.
3. FOR PAY LIMIT DETAILS, SEE SHEET NO. B-39.
4. FOR PARAPET DETAILS, SEE SHEET NO. B-44.
5. FOR ABUTMENT DEMOLITION PLAN, SEE SHEET NO. B-49.
6. FOR BAR LIST, SEE SHEET NO. B-51.
7. FOR DECK JOINT DETAILS, SEE SHEET NO. B-46.

LEGEND:
F.F. - FRONT FACE
R.F. - REAR FACE
E.F. - EACH FACE

CONTROL SECTION		JOB NO.	
DES. BY	R. GANDIA	CHK. BY	B. JECKER
DWN. BY	M. NAFIS		
IN CHARGE OF J. SMITH			

REVISION	BY	C'K'D	DATE

BRIDGE NO. 2

NEW JERSEY DEPARTMENT OF TRANSPORTATION
BUREAU OF STRUCTURAL ENGINEERING

WEST ABUTMENT PLAN & ELEVATION II

ROUTE 80 BRIDGES OVER ROUTE 287 NORTHBOUND AND SMITH ROAD
CONTRACT NO. 043003714

DEWBERRY-GOODKIND, INC. COA# 24GA28047600

BRIAN D. JECKER, P.E. DATE 8-24-10
NEW JERSEY PROFESSIONAL ENGINEER LICENSE NO. 24GE04088600

BRIDGE SHEET NO. B-34 OF B-58

105
129

Dewberry-Goodkind, Inc.
Bloomfield, N.J.

1/2"=1'-0" 1 6" 0 2 4
1/4"=1'-0" 4 0 4 8

tfelcone 8/20/2010 10:17:51 AM OceTDS700-BW.plt 30-Scale 3056-REDECKING-Route80-287-Smith\3056\redecking\cad\struct\Bridge2\BR2-NWABUTP&EL.dgn

STATE	FEDERAL PROJECT NO.	SHEET	TOTAL SHEETS
N.J.	BR-080-5(094)		

STRUCTURE NO. 1414-169

STRUCTURE NAME
ROUTE I-80 OVER SMITH ROAD

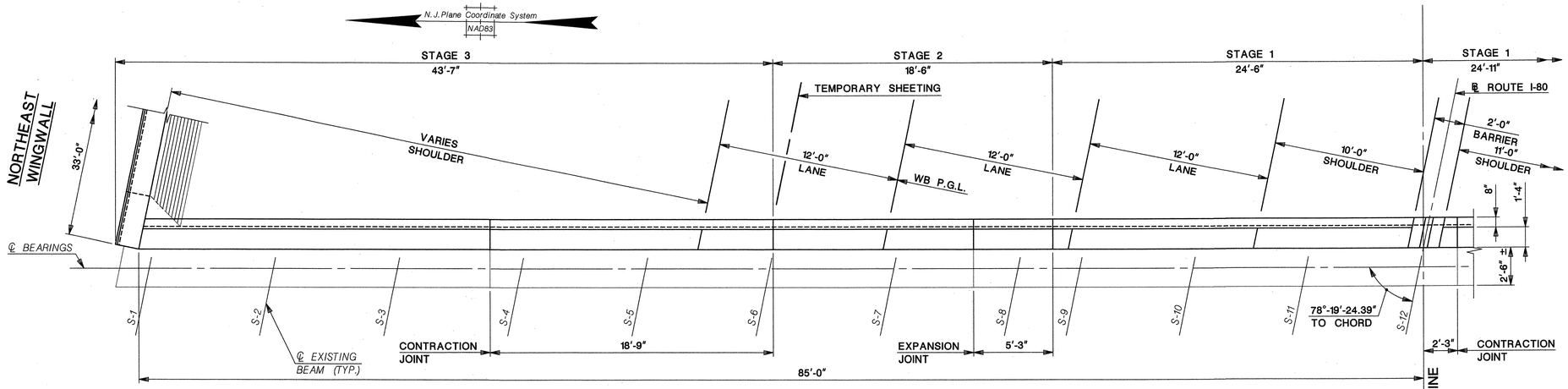

PLAN

SCALE ¼" = 1'-0"

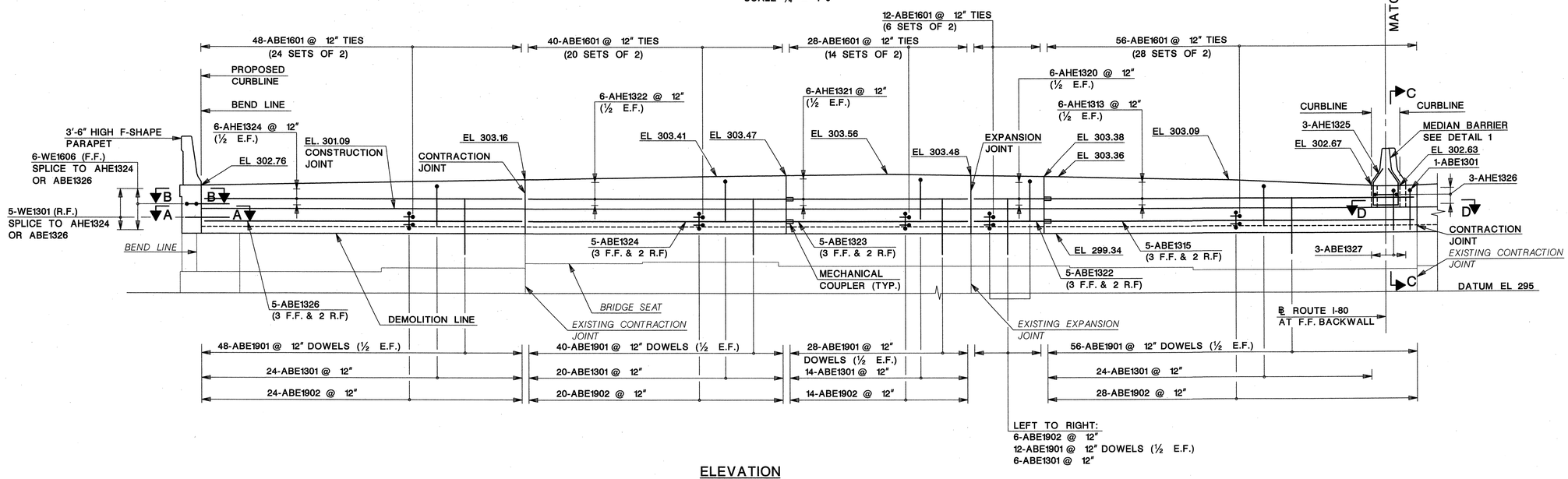

ELEVATION

SCALE ¼" = 1'-0"

NOTES:
1. FOR ABUTMENT NOTES, SEE SHEET NO. B-33.

QUANTITIES

ITEM NO.	DESCRIPTION	UNIT	CONTRACT QUANTITY
202009P	EXCAVATION, UNCLASSIFIED	C.Y.	130
501003P	TEMPORARY SHEETING	S.F.	190
504008P	REINFORCEMENT STEEL EPOXY COATED	LBS.	6,228
504024P	CONCRETE ABUTMENT WALL	C.Y.	40
507039P	CONCRETE BRIDGE PARAPET, HPC	L.F.	8
507048M	24" BY 32" CONCRETE BARRIER CURB, BRIDGE	L.F.	2
701021P	3" RIGID METALLIC CONDUIT	L.F.	8

LEGEND:
F.F. - FRONT FACE
R.F. - REAR FACE
E.F. - EACH FACE

REFERENCES:
1. FOR TYPICAL BACWALL SECTION, SEE SHEET NO. B-34.
2. FOR EAST ABUTMENT PLAN AND ELEVATION II, SEE SHEET NO. B-36.
3. FOR WINGWALL ELEVATIONS, SEE SHEET NO. B-37.
4. FOR SECTIONS A-A, B-B, C-C, D-D AND DETAIL 1 SEE SHEET NO. B-38.
5. FOR PAY LIMIT DETAILS, SEE SHEET NO. B-39.
6. FOR PARAPET DETAILS, SEE SHEET NO. B-44.
7. FOR ABUTMENT DEMOLITION PLAN, SEE SHEET NO. B-49.
8. FOR BAR LIST, SEE SHEET NO. B-52.

½"=1'-0" 1 6" 0 2 4

¼"=1'-0" 4 0 4 8

REVISION	BY	C'K'D	DATE

CONTROL SECTION		JOB NO.	
DES. BY	R. GANDIA	CHK. BY	B. JECKER
DWN. BY	M. NAFIS		

IN CHARGE OF J. SMITH

BRIDGE NO. 2

NEW JERSEY DEPARTMENT OF TRANSPORTATION
BUREAU OF STRUCTURAL ENGINEERING

EAST ABUTMENT PLAN & ELEVATION I

ROUTE 80 BRIDGES OVER ROUTE 287 NORTHBOUND AND SMITH ROAD
CONTRACT NO. 043003714

DEWBERRY-GOODKIND, INC. COA# 24GA28047600
BRIAN D. JECKER, P.E. DATE 8-20-10
NEW JERSEY PROFESSIONAL ENGINEER LICENSE NO. 24GE04088600

BRIDGE SHEET NO. B-35 OF B-58

106
129

Dewberry-Goodkind, Inc.
Bloomfield, N.J.

tfelcone 8/20/2010 10:17:53 AM OceTDS700-BW.plt 30-Scale 3056-REDECKING-Route80-287-of\3056\redecking\cad\struct\Bridge2\BR2-NEABUTP&EL.dgn

STATE	FEDERAL PROJECT NO.	SHEET	TOTAL SHEETS
N.J.	BR-080-5(094)		

STRUCTURE NO. 1414-169

STRUCTURE NAME
ROUTE I-80 OVER SMITH ROAD

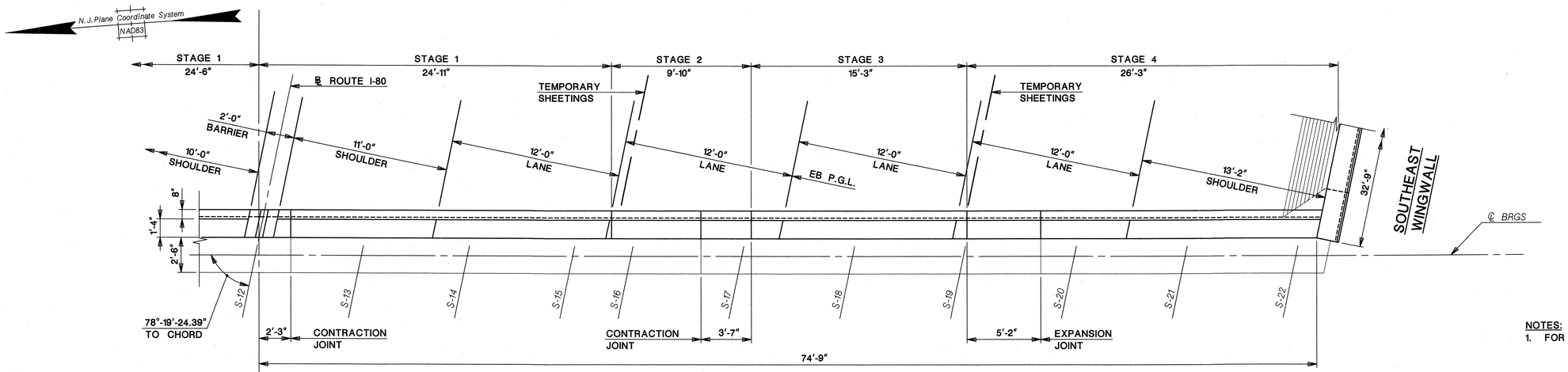

PLAN

SCALE 1/4" = 1'-0"

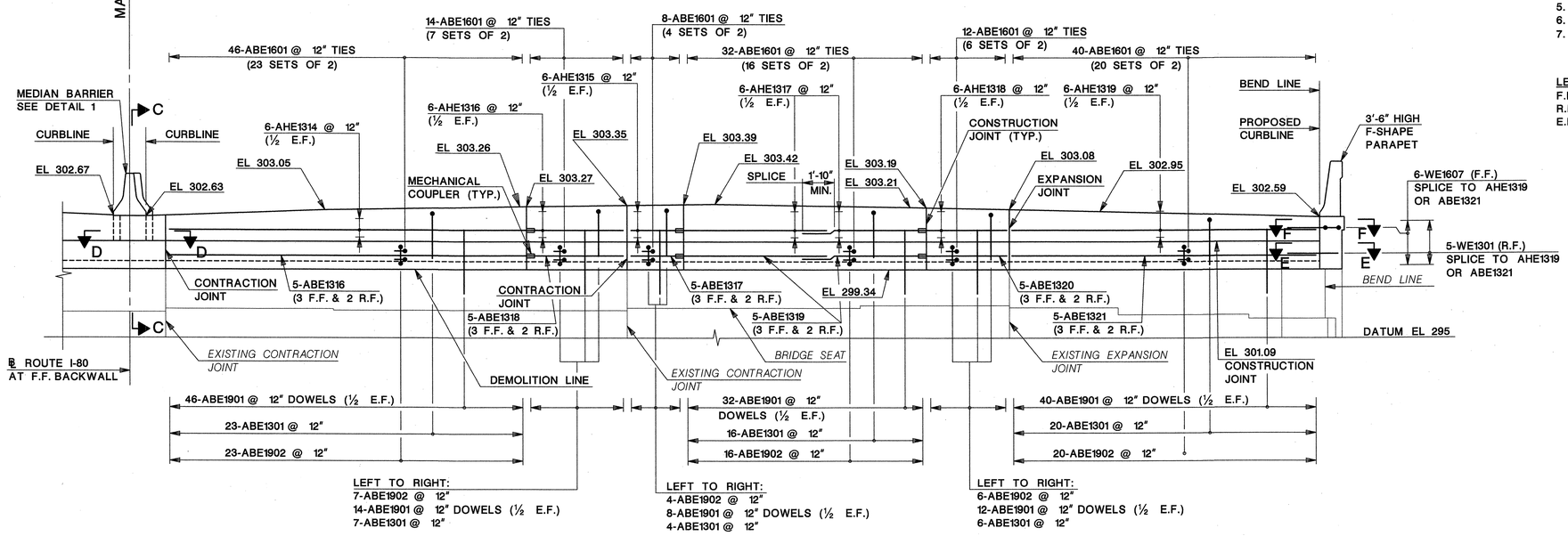

ELEVATION

SCALE 1/4" = 1'-0"

NOTES:
1. FOR ABUTMENT NOTES, SEE SHEET NO. B-33.

REFERENCES:
1. FOR TYPICAL BACKWALL SECTION, SEE SHEET NO. B-34.
2. FOR WINGWALL ELEVATIONS, SEE SHEET NO. B-37.
3. FOR SECTIONS C-C, D-D, E-E, F-F AND DETAIL 1, SEE SHEET NO. B-38.
4. FOR PAY LIMIT DETAILS, SEE SHEET NO. B-39.
5. FOR PARAPET DETAILS, SEE SHEET NO. B-44.
6. FOR ABUTMENT DEMOLITION PLAN, SEE SHEET NO. B-49.
7. FOR BAR LIST, SEE SHEET NO. B-52.

LEGEND:
F.F. - FRONT FACE
R.F. - REAR FACE
E.F. - EACH FACE

BRIDGE NO. 2

NEW JERSEY DEPARTMENT OF TRANSPORTATION
BUREAU OF STRUCTURAL ENGINEERING

EAST ABUTMENT PLAN & ELEVATION II

ROUTE 80 BRIDGES OVER ROUTE 287
NORTHBOUND AND SMITH ROAD
CONTRACT NO. 043003714

DEWBERRY-GOODKIND, INC. COA# 24GA28047600

BRIAN D. JECKER, P.E. 8-24-10 DATE
NEW JERSEY PROFESSIONAL ENGINEER LICENSE NO. 24GE04088600

BRIDGE SHEET NO. B-36 OF B-58

107
129

CONTROL SECTION		JOB NO.	
DES. BY	R. GANDIA	CHK. BY	B. JECKER
DWN. BY	M. NAFIS		

IN CHARGE OF J. SMITH

1/2"=1'-0" 1 6" 0 2 4

1/4"=1'-0" 4 0 4 8

REVISION	BY	C'K'D	DATE

Dewberry-Goodkind, Inc.
Bloomfield, N.J.

tfelcone 8/20/2010 10:17:56 AM OceTDS700-BW.plt 30-Scale 3056-REDECKING-Route80-287-y\3056\redecking\cad\struct\Bridge2\BR2-SEABUTP&EL.dgn

STATE	FEDERAL PROJECT NO.	SHEET	TOTAL SHEETS
N.J.	BR-080-5(094)		

STRUCTURE NO. 1414-169

STRUCTURE NAME
ROUTE I-80 OVER SMITH ROAD

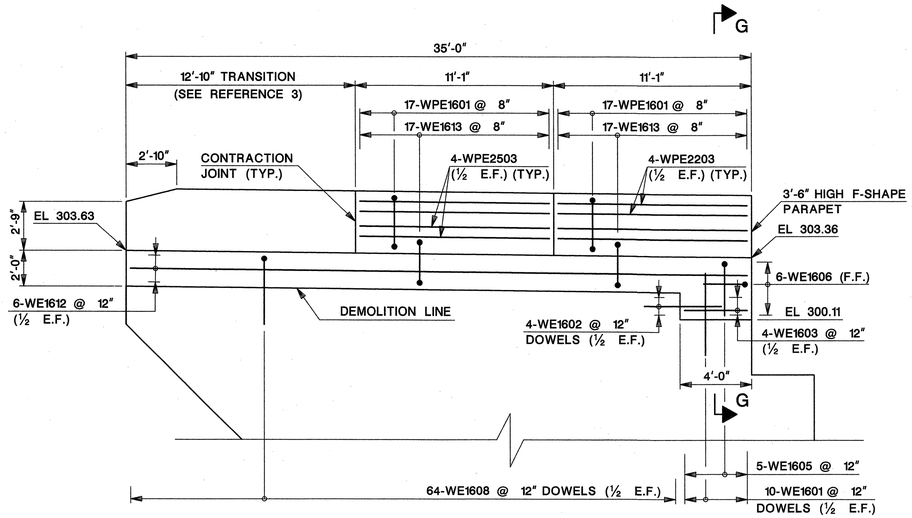

SOUTHWEST WINGWALL ELEVATION
SCALE: ¼" = 1'-0"

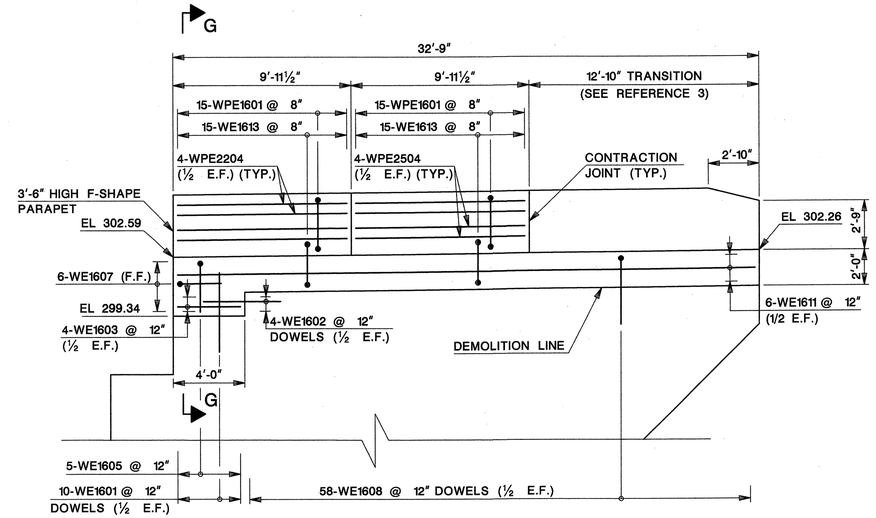

SOUTHEAST WINGWALL ELEVATION
SCALE: ¼" = 1'-0"

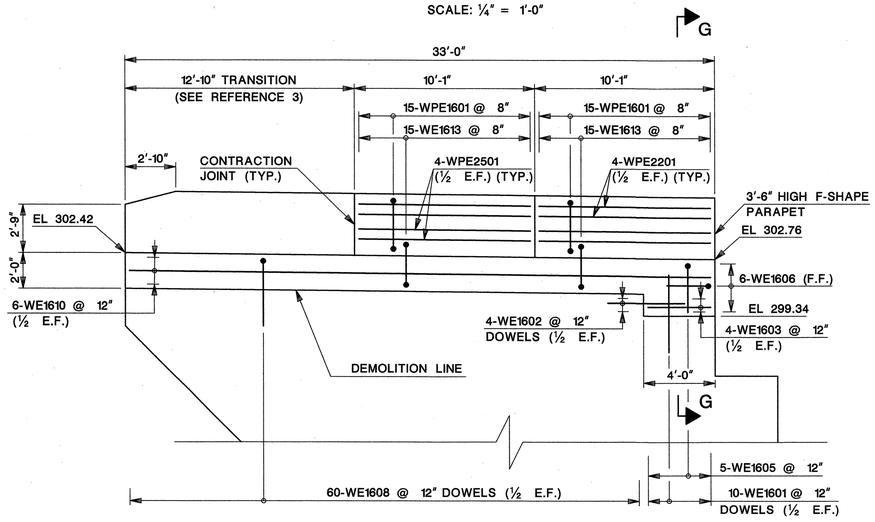

NORTHEAST WINGWALL ELEVATION
SCALE: ¼" = 1'-0"

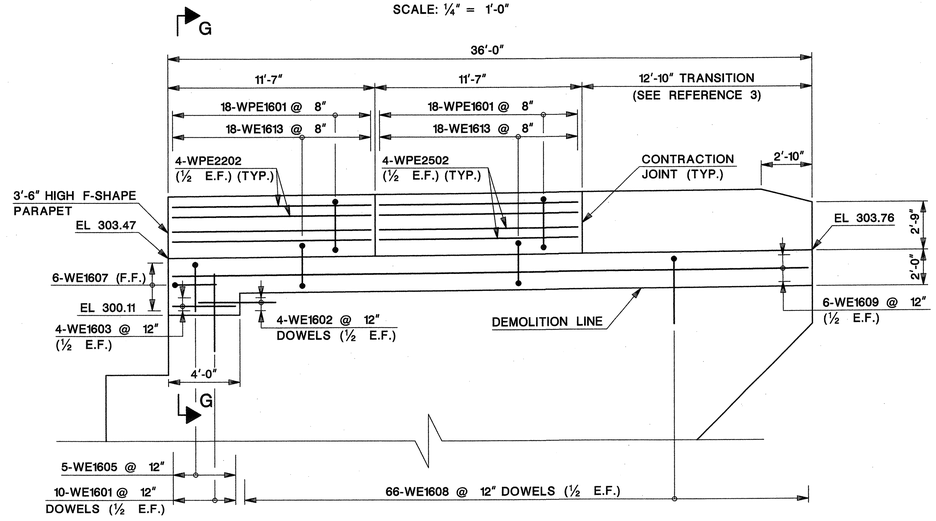

NORTHWEST WINGWALL ELEVATION
SCALE: ¼" = 1'-0"

NOTES:
1. FOR ABUTMENT NOTES, SEE SHEET NO. B-33.

REFERENCES:
1. FOR TYPICAL WINGWALL SECTION AND SECTION G-G, SEE SHEET NO. B-38.
2. FOR PAY LIMIT DETAILS, SEE SHEET NO. B-39
3. FOR REINFORCEMENT IN PARAPET TRANSITION, AND ADDITIONAL PARAPET DETAILS, SEE SHEET NO. B-44.
4. FOR WINGWALL DEMOLITION PLAN, SEE SHEET NO. B-50.
5. FOR BAR LIST, SEE SHEET NO. B-53.

QUANTITIES

ITEM NO.	DESCRIPTION	UNIT	CONTRACT QUANTITY
202009P	EXCAVATION, UNCLASSIFIED	C.Y.	70
504006P	REINFORCEMENT STEEL EPOXY COATED	LBS.	8,824
504018P	CONCRETE WINGWALL	C.Y.	14
507039P	CONCRETE BRIDGE PARAPET, HPC	L.F.	121
70102P	3" RIGID METALLIC CONDUIT	L.F.	141

LEGEND:
F.F. - FRONT FACE
R.F. - REAR FACE
E.F. - EACH FACE

¼"=1'-0" 3 2 1 0 3 6 9

REVISION	BY	C'K'D	DATE

BRIDGE NO. 2

NEW JERSEY DEPARTMENT OF TRANSPORTATION
BUREAU OF STRUCTURAL ENGINEERING

WINGWALL ELEVATIONS

ROUTE 80 BRIDGES OVER ROUTE 287
NORTHBOUND AND SMITH ROAD
CONTRACT NO. 043003714

DEWBERRY-GOODKIND, INC. COA# 24GA28047600
BRIAN D. JECKER, P.E. 8-24-10 DATE
NEW JERSEY PROFESSIONAL ENGINEER LICENSE. NO. 24GE04088600

BRIDGE SHEET NO. B-37 OF B-58

108
129

CONTROL SECTION		JOB NO.	
DES. BY	R. GANDIA	CHK. BY	B. JECKER
DWN. BY	M. NAFIS		

IN CHARGE OF J. SMITH

Dewberry-Goodkind, Inc.
Bloomfield, N.J.

tfelcone 8/20/2010 10:17:59 AM OceTDS700-BW.plt 30-Scale 3056-REDECKING-Route80-287-SB,3056\Redecking\CAD\Struct\Bridge2\BR2-WINGWALLEL.dgn

STATE	FEDERAL PROJECT NO.	SHEET	TOTAL SHEETS
N.J.	BR-080-5(094)		

STRUCTURE NO. 1414-169

STRUCTURE NAME ROUTE I-80 OVER SMITH ROAD

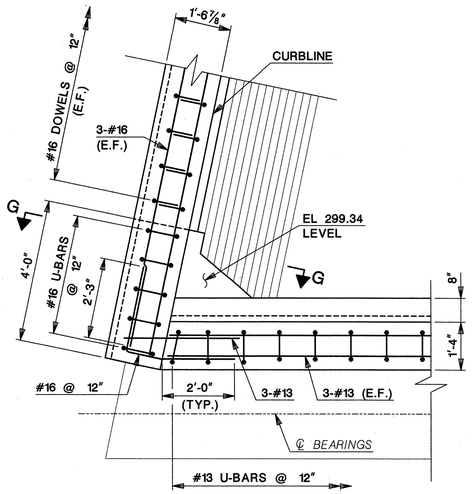

SECTION B-B
SCALE: ½" = 1'-0"

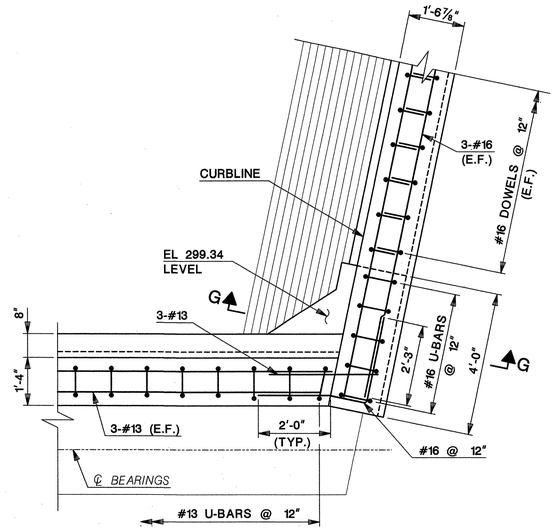

SECTION F-F
SCALE: ½" = 1'-0"

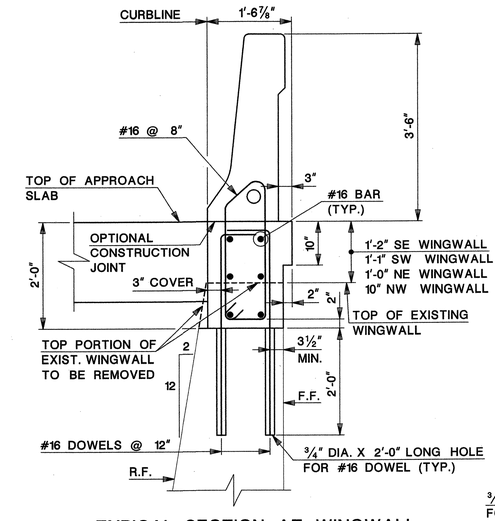

TYPICAL SECTION AT WINGWALL
SCALE: ¾" = 1'-0"

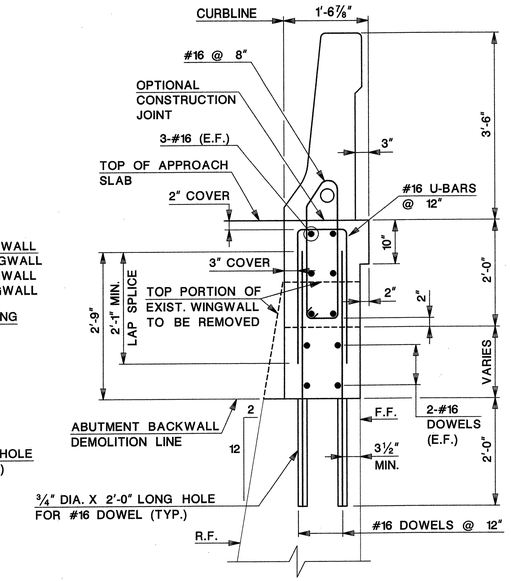

SECTION G-G
SCALE: ¾" = 1'-0"

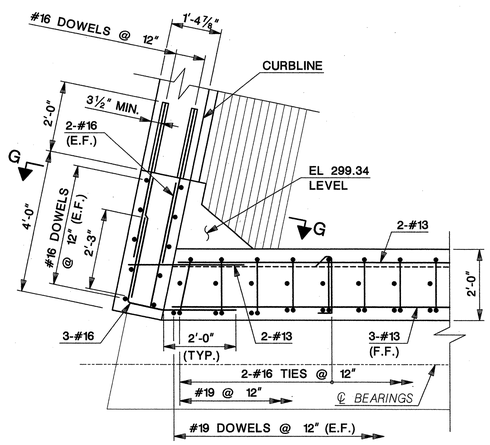

SECTION A-A
SCALE: ½" = 1'-0"

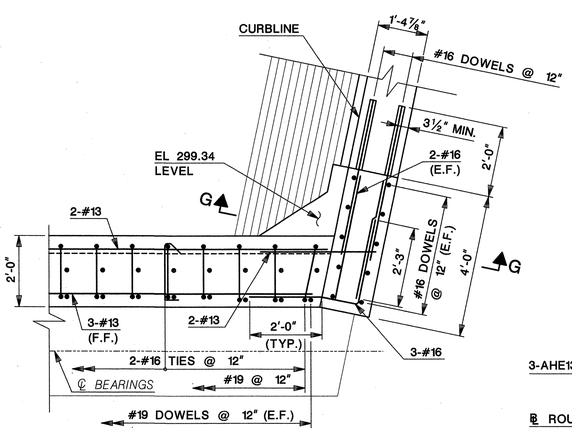

SECTION E-E
SCALE: ½" = 1'-0"

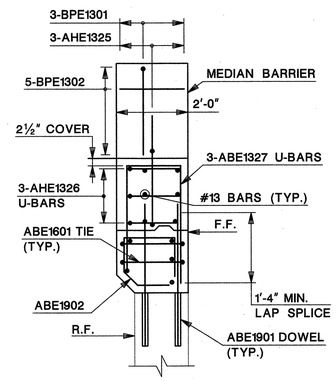

SECTION C-C
SCALE: ½"=1'-0"

NOTE: FOR INFORMATION NOT SHOWN, SEE TYPICAL BACKWALL SECTION

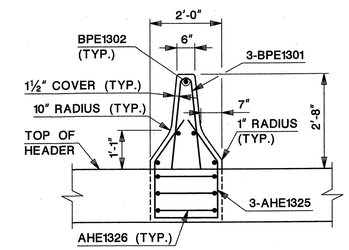

DETAIL 1
SCALE: ½"=1'-0"

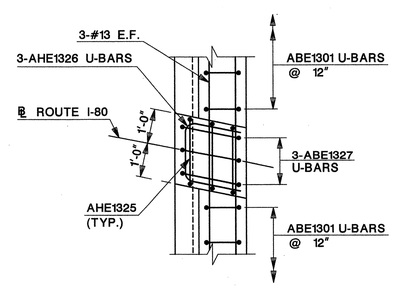

SECTION D-D
SCALE: ½"=1'-0"

½"=1'-0" 1 6" 0 2 4

¾"=1'-0" 1 6" 0 1 2 3

REFERENCES:
1. FOR ABUTMENT NOTES, SEE SHEET NO. B-33.
2. FOR PARAPET REINFORCEMENT AND ADDITIONAL DETAILS, SEE SHEET NO. B-44.

LEGEND:
F.F. - FRONT FACE
R.F. - REAR FACE
E.F. - EACH FACE

REVISION	BY	C'K'D	DATE

CONTROL SECTION		JOB NO.	
DES. BY	R. GANDIA	CHK. BY	J. SMITH
DWN. BY	M. NAFIS		

IN CHARGE OF J. SMITH

BRIDGE NO. 2

NEW JERSEY DEPARTMENT OF TRANSPORTATION
BUREAU OF STRUCTURAL ENGINEERING

ABUTMENT SECTIONS

ROUTE 80 BRIDGES OVER ROUTE 287
NORTHBOUND AND SMITH ROAD
CONTRACT NO. 043003714

DEWBERRY-GOODKIND, INC. COA# 24GA28047600

BRIAN D. JECKER, P.E. 8-24-10 DATE

NEW JERSEY PROFESSIONAL ENGINEER LICENSE. NO. 24GE04089600

BRIDGE SHEET NO. B-38 OF B-58

109
129

Dewberry-Goodkind, Inc.
Bloomfield, N.J.

tfelcone 8/20/2010 10:18:02 AM OceTDS700-BW.plt 30-Scale 3056-REDECKING-Route80-287-Q9\3056\Redecking\CAD\Struct\Bridge2\BR2-ABUTDET.dgn

STATE	FEDERAL PROJECT NO.	SHEET	TOTAL SHEETS
N.J.	BR-080-5(094)		

STRUCTURE NO. 1414-169

STRUCTURE NAME
ROUTE I-80 OVER SMITH ROAD

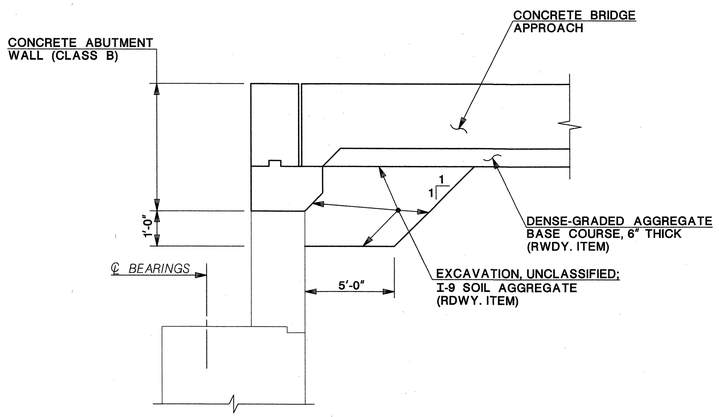

ABUTMENT PAY LIMITS
(EAST ABUTMENT SHOWN, WEST ABUTMENT SIMILAR)
NOT TO SCALE

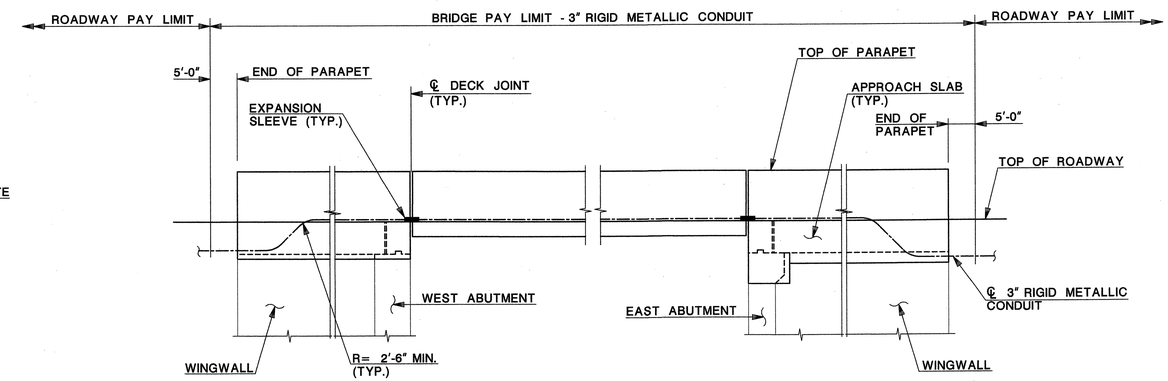

RIGID METALLIC CONDUIT PAY LIMIT DETAIL
NOT TO SCALE

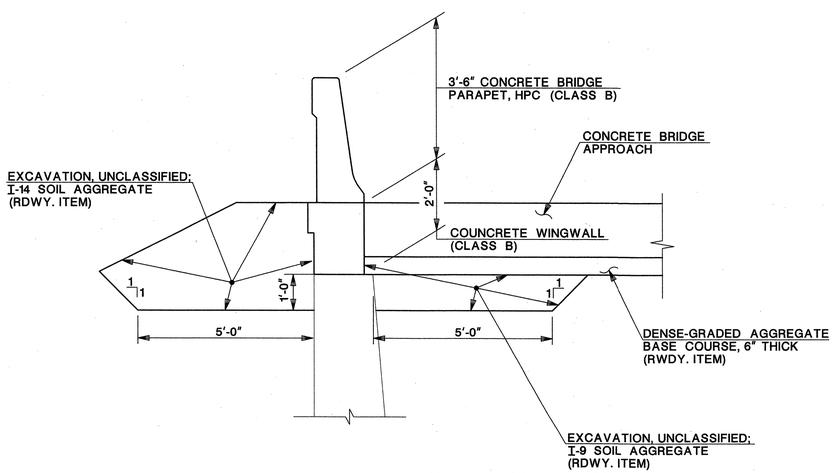

WINGWALL PAY LIMITS
(NE WINGWALL SHOWN, ALL OTHERS SIMILAR)
NOT TO SCALE

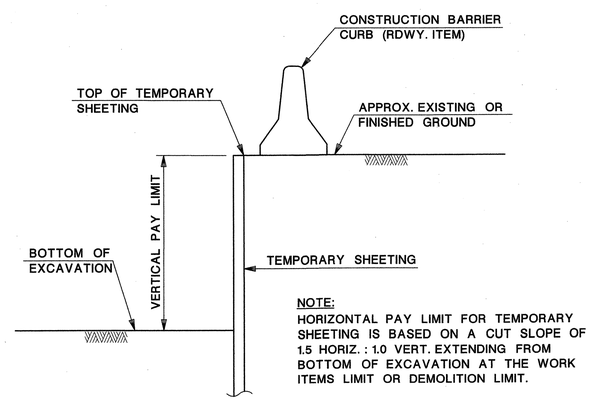

NOTE:
HORIZONTAL PAY LIMIT FOR TEMPORARY SHEETING IS BASED ON A CUT SLOPE OF 1.5 HORIZ. : 1.0 VERT. EXTENDING FROM BOTTOM OF EXCAVATION AT THE WORK ITEMS LIMIT OR DEMOLITION LIMIT.

TEMPORARY SHEETING PAY LIMIT
NOT TO SCALE

CONTROL SECTION		JOB NO.	
DES. BY	R. GANDIA	CHK. BY	B. JECKER
DWN. BY	A.BETANCOURT		

IN CHARGE OF J. SMITH

REVISION	BY	C'K'D	DATE

BRIDGE NO. 2

NEW JERSEY DEPARTMENT OF TRANSPORTATION
BUREAU OF STRUCTURAL ENGINEERING

SUBSTRUCTURE PAY LIMITS AND DETAILS

ROUTE 80 BRIDGES OVER ROUTE 287
NORTHBOUND AND SMITH ROAD
CONTRACT NO. 043003714

DEWBERRY-GOODKIND, INC. COA# 24GA28047600

BRIAN D. JECKER, P.E. 8-20-10 DATE
NEW JERSEY PROFESSIONAL ENGINEER LICENSE. NO. 24GE04088600

BRIDGE SHEET NO. B-39 OF B-58

110
129

Dewberry-Goodkind, Inc.
Bloomfield, N.J.

tfelcone 8/20/2010 10:18:05 AM OceTDS700-BW.plt 30-Scale 3056-REDECKING-Route80-287-Q9,3056\Redecking\CAD\Struct\Bridge2\BR2-PAY-LIMTS.dgn

STATE	FEDERAL PROJECT NO.	SHEET	TOTAL SHEETS
N.J.	BR-080-5(094)		

STRUCTURE NO. 1414-169

STRUCTURE NAME
ROUTE I-80 OVER SMITH ROAD

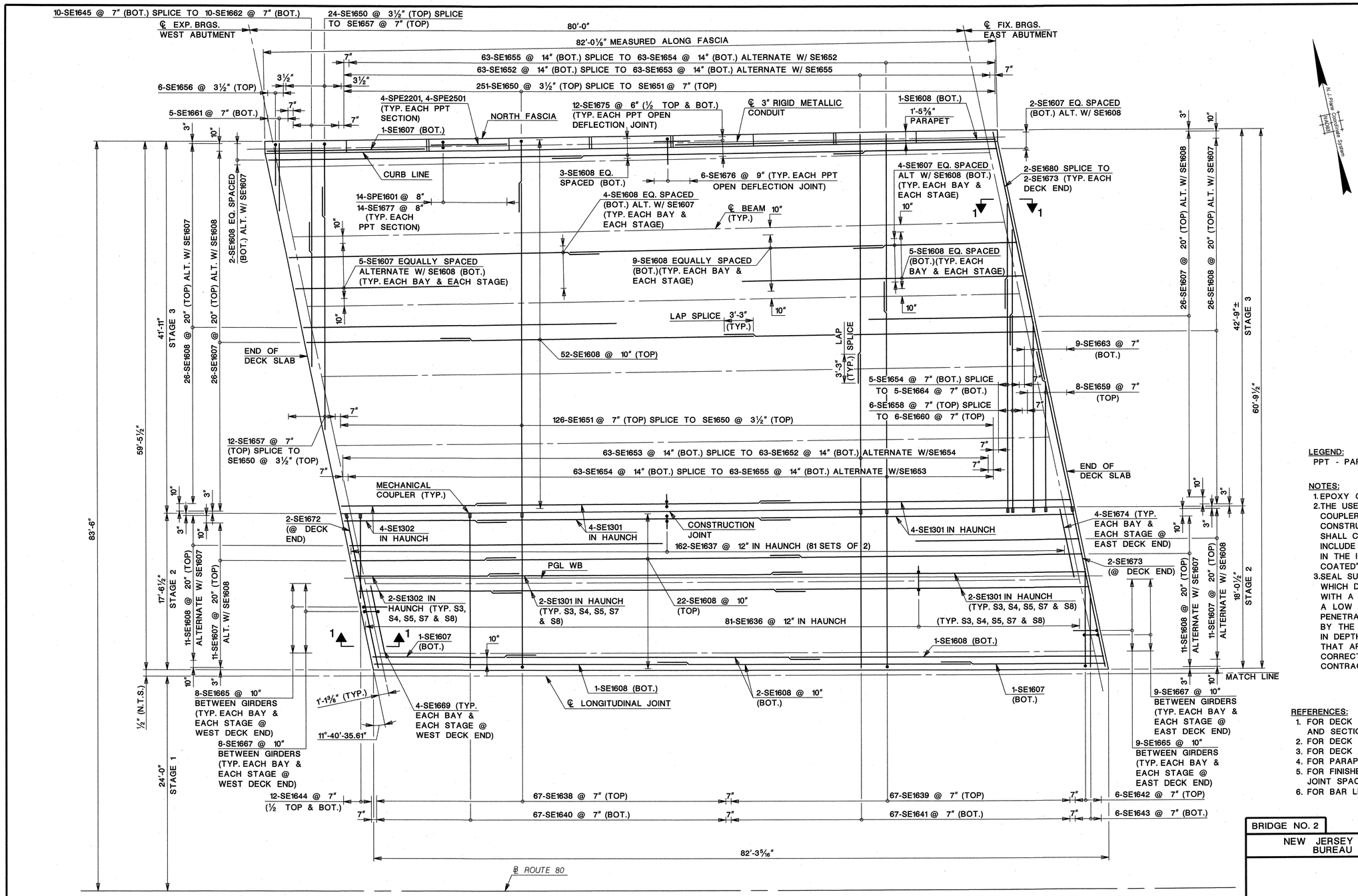

DECK PLAN
SCALE: 3/16"=1'-0"

LEGEND:
PPT - PARAPET

NOTES:
1. EPOXY COAT ALL REINFORCEMENT STEEL.
2. THE USE OF MECHANICAL REINFORCEMENT COUPLERS ARE REQUIRED AT STAGE LINE CONSTRUCTION JOINTS AS SHOWN. COUPLERS SHALL CONFORM TO SUBSECTION 905.04. INCLUDE THE COST OF THE COUPLERS IN THE ITEM "REINFORCEMENT STEEL, EPOXY COATED".
3. SEAL SURFACE CRACKS IN THE DECK SLAB WHICH DO NOT EXCEED ⅜INCH IN DEPTH WITH A LOW VISCOSITY EPOXY SEALER OR A LOW VISCOSITY METHACRYLATE MONOMER PENETRATING SEALER THAT IS APPROVED BY THE RE. CRACKS EXCEEDING ⅜INCH IN DEPTH WILL BE REPAIRED BY METHODS THAT ARE APPROVED BY THE RE. ALL SUCH CORRECTIVE WORK SHALL BE AT THE CONTRACTORS EXPENSE.

REFERENCES:
1. FOR DECK PLAN II, TABLE OF QUANTITIES, AND SECTION 1-1, SEE SHEET NO. B-41.
2. FOR DECK PLAN III, SEE SHEET NO. B-42.
3. FOR DECK SECTION, SEE SHEET NO. B-43.
4. FOR PARAPET DETAILS, SEE SHEET NO. B-44.
5. FOR FINISHED SLAB ELEVATIONS AND PARAPET JOINT SPACING, SEE SHEET NO. B-45.
6. FOR BAR LIST, SEE SHEET NO. B-53 AND B-54.

BRIDGE NO. 2

NEW JERSEY DEPARTMENT OF TRANSPORTATION
BUREAU OF STRUCTURAL ENGINEERING

DECK PLAN I

ROUTE 80 BRIDGES OVER ROUTE 287 NORTHBOUND AND SMITH ROAD
CONTRACT NO. 043003714

DEWBERRY-GOODKIND, INC. COA# 24GA28047600
BRIAN D. JECKER, P.E. DATE 9-28-10
NEW JERSEY PROFESSIONAL ENGINEER LICENSE NO. 24GE04086600

BRIDGE SHEET NO. B-40 OF B-58

111
129

REVISION	BY	C'K'D	DATE

CONTROL SECTION		JOB NO.	
DES. BY	P. HULYALKAR	CHK. BY	W. LANG
DWN. BY	M. NAFIS		

IN CHARGE OF J. SMITH

3/16"=1'-0" 1 0 5 10

Dewberry-Goodkind, Inc.
Bloomfield, N.J.

bjecker 8/23/2010 8:07:45 AM OceTDS700-BW.plt 30-Scale 3056-REDECKING-Route80-287-Q3\3056\REDECKING\CAD\Struct\Bridge2\BR2-DECKPLAN-1.dgn

STATE	FEDERAL PROJECT NO.	SHEET	TOTAL SHEETS
N.J.	BR-080-5(094)		

STRUCTURE NO. 1414-169

STRUCTURE NAME
ROUTE I-80 OVER SMITH ROAD

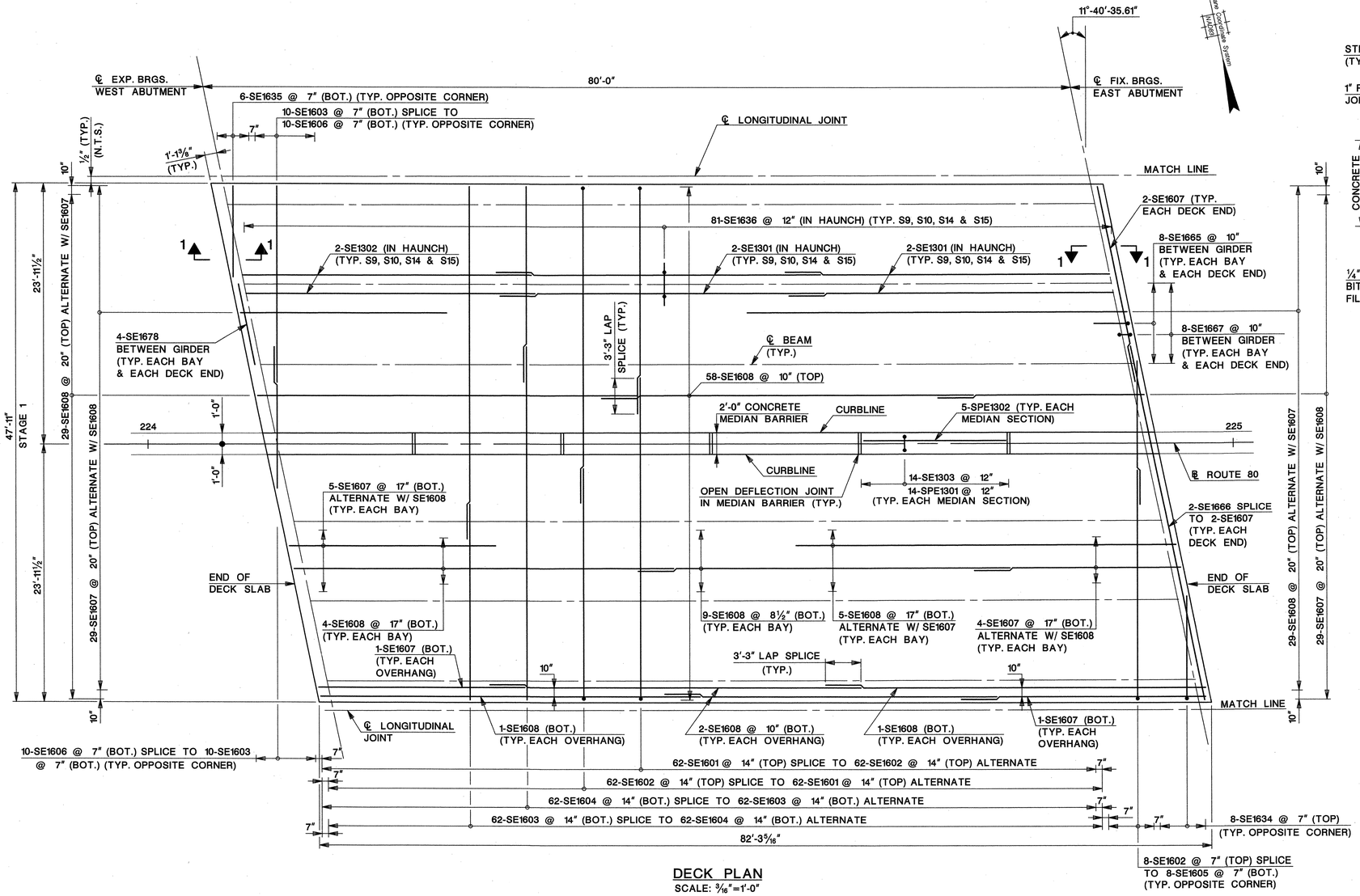

DECK PLAN
SCALE: 3/16"=1'-0"

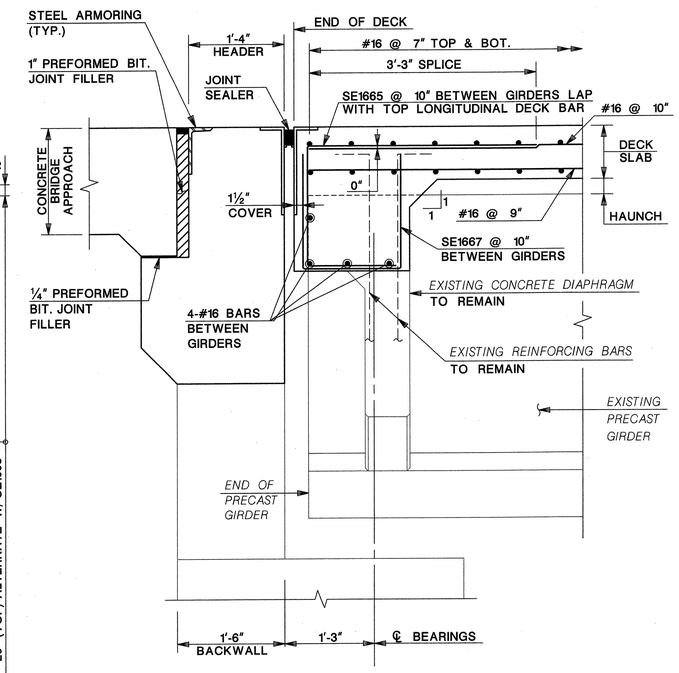

SECTION 1-1
SCALE: 1" = 1'-0"

NOTES:
1. FOR ARMORING ANGLE DETAILS, SEE DECK JOINT DETAILS.
2. SPACE REINFORCEMENT TO CLEAR STUDS FOR ARMORING ANGLES.
3. FOR ADDITIONAL DECK NOTES, SEE SHEET B-40.

REFERENCES:
1. FOR DECK REFERENCES, SEE SHEET NO. B-40.
2. FOR DECK JOINT DETAILS, SEE SHEET NO. 45.

QUANTITIES

ITEM NO.	DESCRIPTION	UNIT	CONTRACT QUANTITY
504006P	REINFORCEMENT STEEL, EPOXY COATED	LBS.	109,690
507006P	2½" X 2½" PREFORMED ELASTOMERIC JOINT ASSEMBLY	L.F.	325
507024P	CONCRETE BRIDGE DECK, HPC	C.Y.	435
507039P	CONCRETE BRIDGE PARAPET, HPC	L.F.	165
507048M	24" X 32" CONCRETE BARRIER CURB, BRIDGE	L.F.	83
701021P	3" RIGID METALLIC CONDUIT	L.F.	165

CONTROL SECTION		JOB NO.	
DES. BY	W. LANG	CHK. BY	J. SMITH
DWN. BY	M. NAFIS		

IN CHARGE OF J. SMITH

1"=1'-0" 1 6" 0 1 2

3/16"=1'-0" 1 0 5 10

REVISION	BY	C'K'D	DATE

BRIDGE NO. 2

NEW JERSEY DEPARTMENT OF TRANSPORTATION
BUREAU OF STRUCTURAL ENGINEERING

DECK PLAN II

ROUTE 80 BRIDGES OVER ROUTE 287
NORTHBOUND AND SMITH ROAD
CONTRACT NO. 043003714

DEWBERRY-GOODKIND, INC. COA# 24GA28047600

BRIAN D. JECKER, P.E. DATE 8-20-10
NEW JERSEY PROFESSIONAL ENGINEER LICENSE. NO. 24GE04088600

BRIDGE SHEET NO. B-41 OF B-58

112
129

Dewberry-Goodkind, Inc.
Bloomfield, N.J.

STATE	FEDERAL PROJECT NO.	SHEET	TOTAL SHEETS
N.J.	BR-080-5(094)		

STRUCTURE NO. 1414-169

STRUCTURE NAME
ROUTE I-80 OVER SMITH ROAD

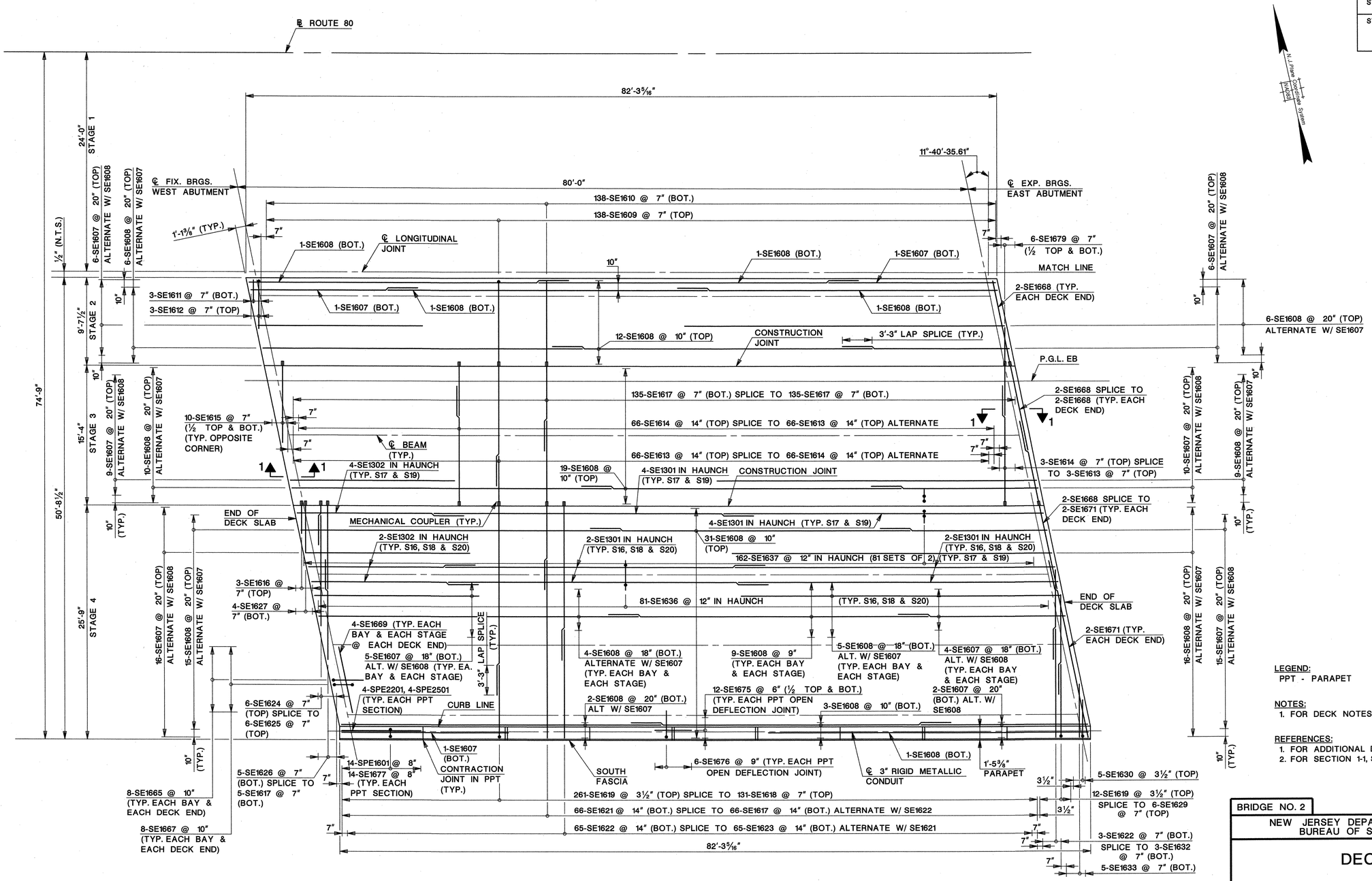

DECK PLAN
SCALE: 3/16" = 1'-0"

LEGEND:
PPT - PARAPET

NOTES:
1. FOR DECK NOTES, SEE SHEET NO. B-40.

REFERENCES:
1. FOR ADDITIONAL DECK REFERENCES, SEE SHEET NO. B-40.
2. FOR SECTION 1-1, SEE SHEET NO. B-41.

CONTROL SECTION		JOB NO.	
DES. BY	P. HULYALKAR	CHK. BY	W. LANG
DWN. BY	M. NAFIS		

IN CHARGE OF J. SMITH

3/16"=1'-0" 1 0 5 10

REVISION	BY	C'K'D	DATE

BRIDGE NO. 2

NEW JERSEY DEPARTMENT OF TRANSPORTATION
BUREAU OF STRUCTURAL ENGINEERING

DECK PLAN III

ROUTE 80 BRIDGES OVER ROUTE 287 NORTHBOUND AND SMITH ROAD
CONTRACT NO. 043003714

DEWBERRY-GOODKIND, INC. COA# 24GA28047600

BRIAN D. JECKER, P.E. 9-24-10 DATE
NEW JERSEY PROFESSIONAL ENGINEER LICENSE NO. 24GE04088600

BRIDGE SHEET NO. B-42 OF B-58

113
129

Dewberry-Goodkind, Inc.
Bloomfield, N.J.

tfelcone 8/20/2010 10:18:13 AM OceTDS700-BW.plt 30-Scale 3056-REDECKING-Route80-287-9B\3056\Redecking\CAD\Struct\Bridge2\BR2-DECKPLAN-3.dgn

STATE	FEDERAL PROJECT NO.	SHEET	TOTAL SHEETS
N.J.	BR-080-5(094)		

STRUCTURE NO. 1414-169

STRUCTURE NAME
ROUTE I-80 OVER SMITH ROAD

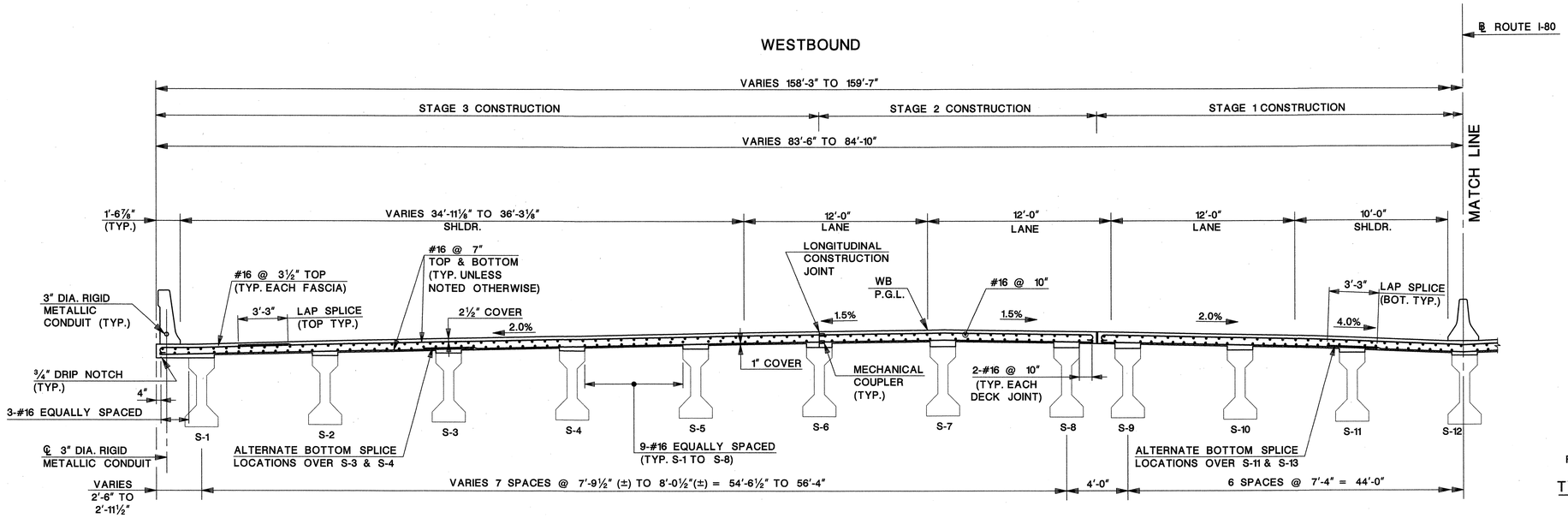

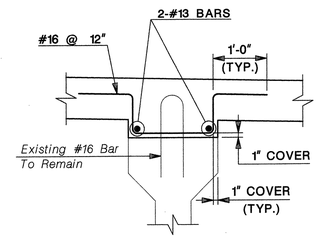

FOR BEAMS S-3, S-4, S-5, S-7 TO S-10, S-14 TO S-16, S-18 AND S-20

TYPICAL CONCRETE HAUNCH REINFORCEMENT

SCALE: N.T.S.

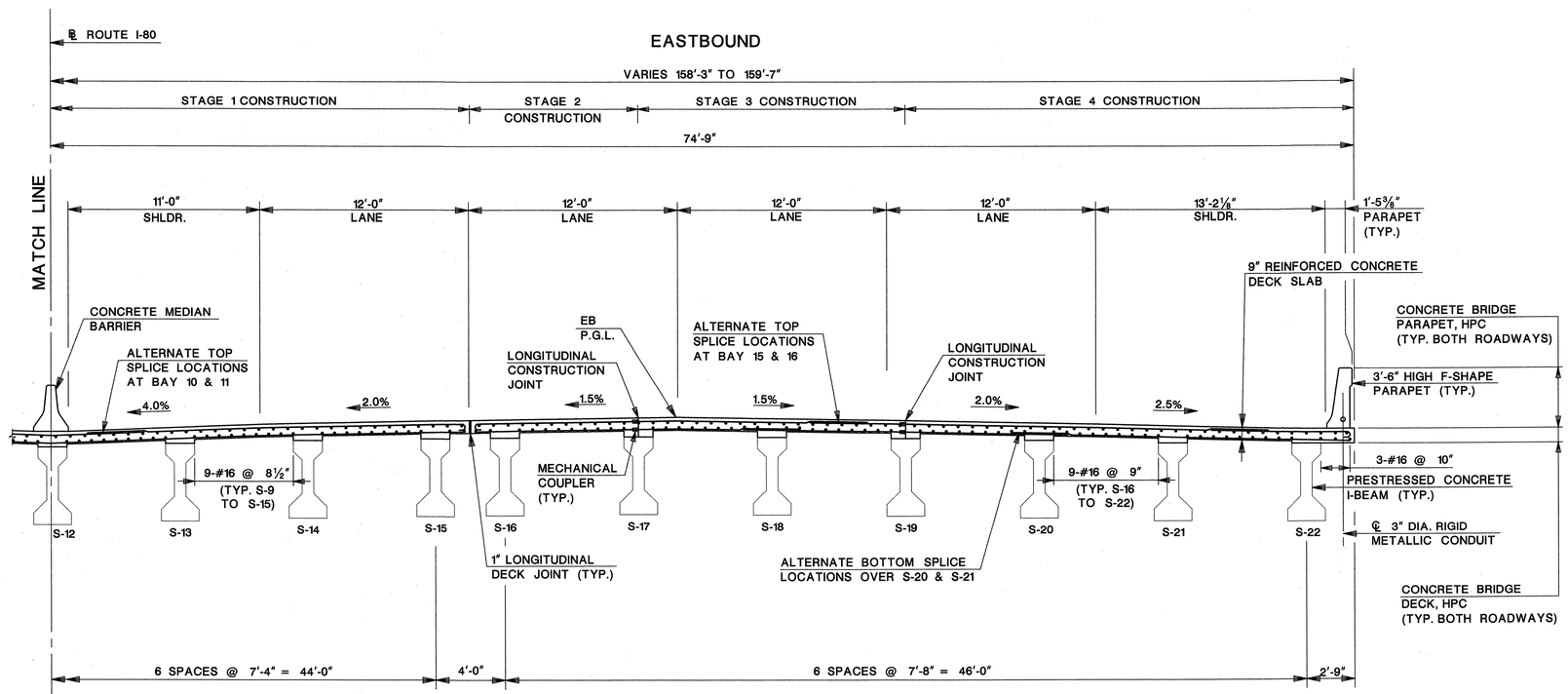

TYPICAL SECTION (LOOKING EAST)

SCALE: ¼" = 1'-0"

¼"=1'-0" 4 0 4 8

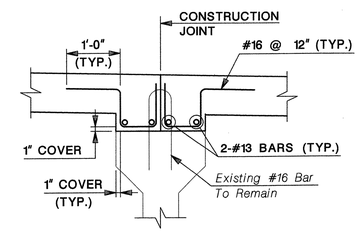

FOR BEAMS S-6, S-17 AND S-19

CONCRETE HAUNCH REINFORCEMENT AT CONSTRUCTION JOINT

SCALE: N.T.S.

NOTES:

1. EPOXY COAT ALL REINFORCEMENT STEEL.
2. THE USE OF MECHANICAL REINFORCEMENT COUPLERS ARE REQUIRED AT STAGE LINE CONSTRUCTION JOINTS AS SHOWN. COUPLERS SHALL CONFORM TO SUBSECTION 905.04. THE COST OF COUPLERS SHALL BE INCLUDED IN THE ITEM "REINFORCEMENT STEEL, EPOXY COATED".

REFERENCES:

1. FOR PARAPET REINFORCEMENT DETAILS, SEE SHEET NO. B-44.
2. FOR MEDIAN BARRIER REINFORCEMENT DETAILS, SEE STANDARD BRIDGE CONSTRUCTION DETAIL BCD-507-9.

BRIDGE NO. 2

NEW JERSEY DEPARTMENT OF TRANSPORTATION
BUREAU OF STRUCTURAL ENGINEERING

DECK SECTION

ROUTE 80 BRIDGES OVER ROUTE 287 NORTHBOUND AND SMITH ROAD
CONTRACT NO. 043003714

DEWBERRY-GOODKIND, INC. COA# 24GA28047600

BRIAN D. JECKER, P.E. DATE 8-24-10
NEW JERSEY PROFESSIONAL ENGINEER LICENSE NO. 24GE04088600

BRIDGE SHEET NO. B-43 OF B-58

114
129

REVISION	BY	C'K'D	DATE

CONTROL SECTION		JOB NO.	
DES. BY	P. HULYALKAR	CHK. BY	W. LANG
DWN. BY	M. NAFIS		

IN CHARGE OF J. SMITH

Dewberry-Goodkind, Inc.
Bloomfield, N.J.

tfelcone 8/20/2010 10:18:16 AM OceTDS700-BW.plt 30-Scale 3056-REDECKING-Route80-287-Q/A,3056\Redecking\CAD\Struct\Bridge2\BR2-DECKSECT.dgn

STATE	FEDERAL PROJECT NO.	SHEET	TOTAL SHEETS
N.J.	BR-080-5(094)		

STRUCTURE NO. 1414-169

STRUCTURE NAME
ROUTE I-80 OVER SMITH ROAD

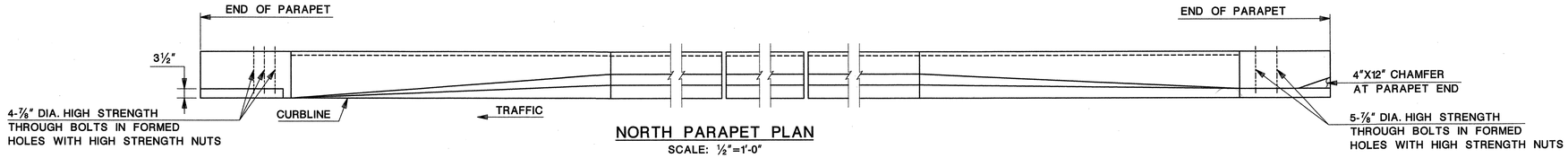

NORTH PARAPET PLAN
SCALE: ½"=1'-0"

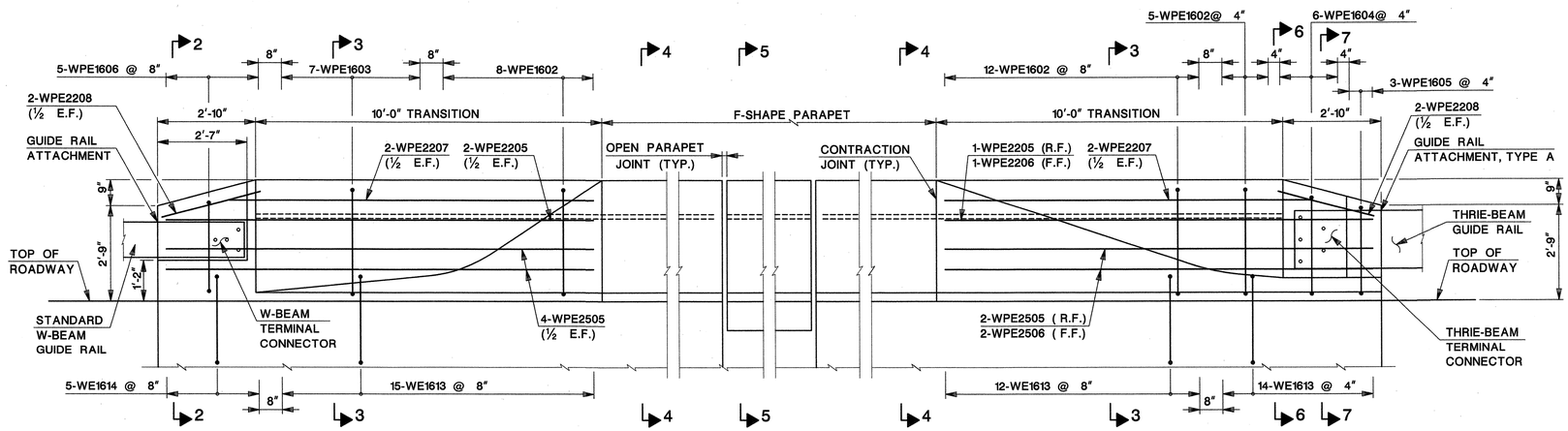

WEST WINGWALL

NORTH PARAPET ELEVATION
SCALE: ½"= 1'-0"

EAST WINGWALL

NOTE:
NORTH PARAPET SHOWN. SOUTH PARAPET OPPOSITE.

LEGEND:
F.F. - FRONT FACE
R.F. - REAR FACE
E.F. - EACH FACE

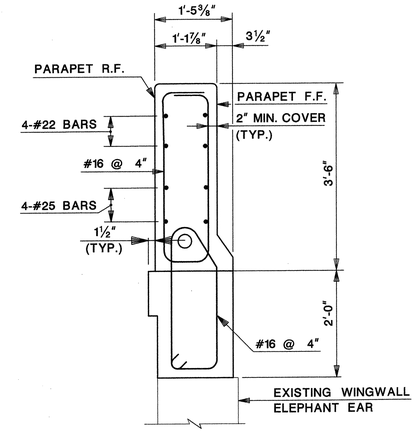

SECTION 6-6
SCALE: ¾"=1'-0"

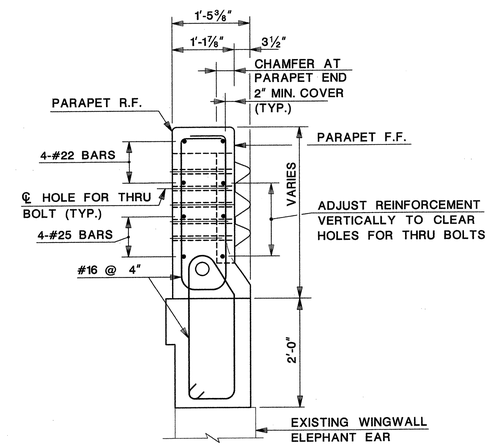

SECTION 7-7
SCALE: ¾"=1'-0"

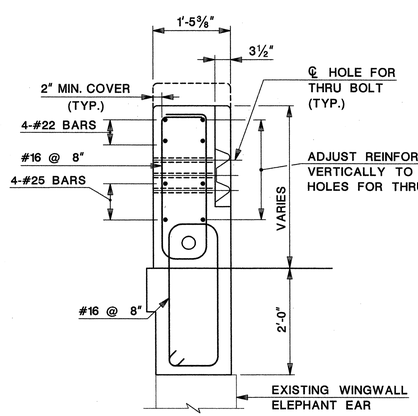

SECTION 2-2
SCALE: ¾"=1'-0"

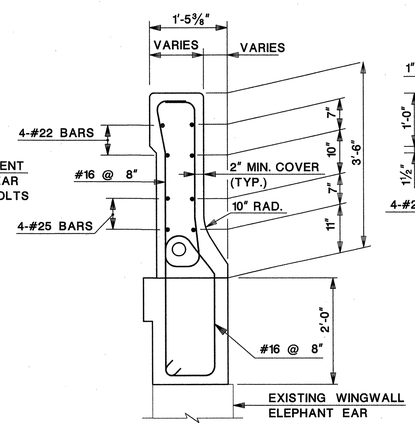

SECTION 3-3
SCALE: ¾"=1'-0"

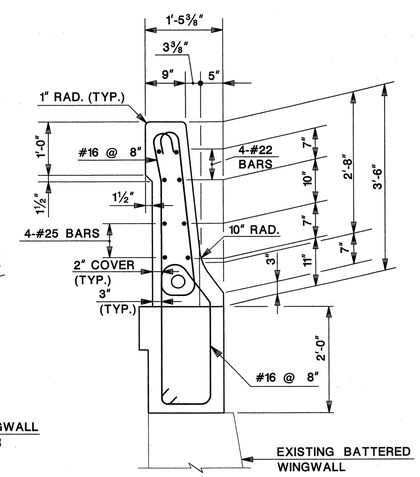

SECTION 4-4
SCALE: ¾"=1'-0"

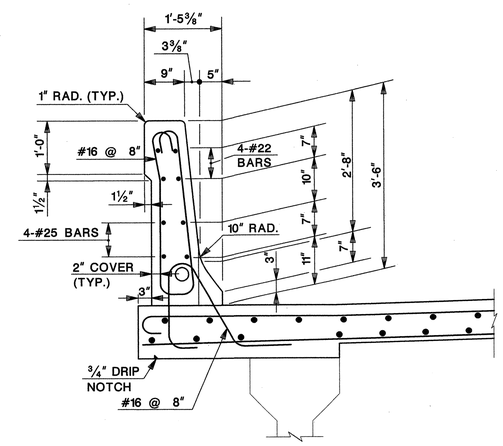

SECTION 5-5
SCALE: ¾"=1'-0"

REFERENCES:
1. FOR ADDITIONAL BEAM GUIDE RAIL DETAILS, SEE STANDARD ROADWAY CONSTRUCTION DETAILS CD609-12 AND CD609-13.
2. FOR ADDITIONAL PARAPET DETAILS, SEE STANDARD BRIDGE CONSTRUCTION DETAIL BCD-507-8.

BRIDGE NO. 2

NEW JERSEY DEPARTMENT OF TRANSPORTATION
BUREAU OF STRUCTURAL ENGINEERING

PARAPET DETAILS

ROUTE 80 BRIDGES OVER ROUTE 287
NORTHBOUND AND SMITH ROAD
CONTRACT NO. 043003714

DEWBERRY-GOODKIND, INC. COA# 24GA28047600
BRIAN D. JECKER, P.E. DATE 8-24-10
NEW JERSEY PROFESSIONAL ENGINEER LICENSE NO. 24GE04088600

BRIDGE SHEET NO. B-44 OF B-58

115
129

CONTROL SECTION		JOB NO.	
DES. BY	T. STRNAD	CHK. BY	B. JECKER
DWN. BY	M. NAFIS		

IN CHARGE OF J. SMITH

REVISION	BY	C'K'D	DATE

½"=1'-0" 1 6" 0 2 4
¾"=1'-0" 1 6" 0 1 2 3

Dewberry-Goodkind, Inc.
Bloomfield, N.J.

tfelcone 8/20/2010 10:18:19 AM OceTDS700-BW.plt 30-Scale 3056-REDECKING-Route80-287-Q9\3056\Redecking\CAD\Struct\Bridge2\BR2-PARAPETSECT.dgn

STATE	FEDERAL PROJECT NO.	SHEET	TOTAL SHEETS
N.J.	BR-080-5(094)		

STRUCTURE NO. 1414-169

STRUCTURE NAME
ROUTE I-80 OVER SMITH ROAD

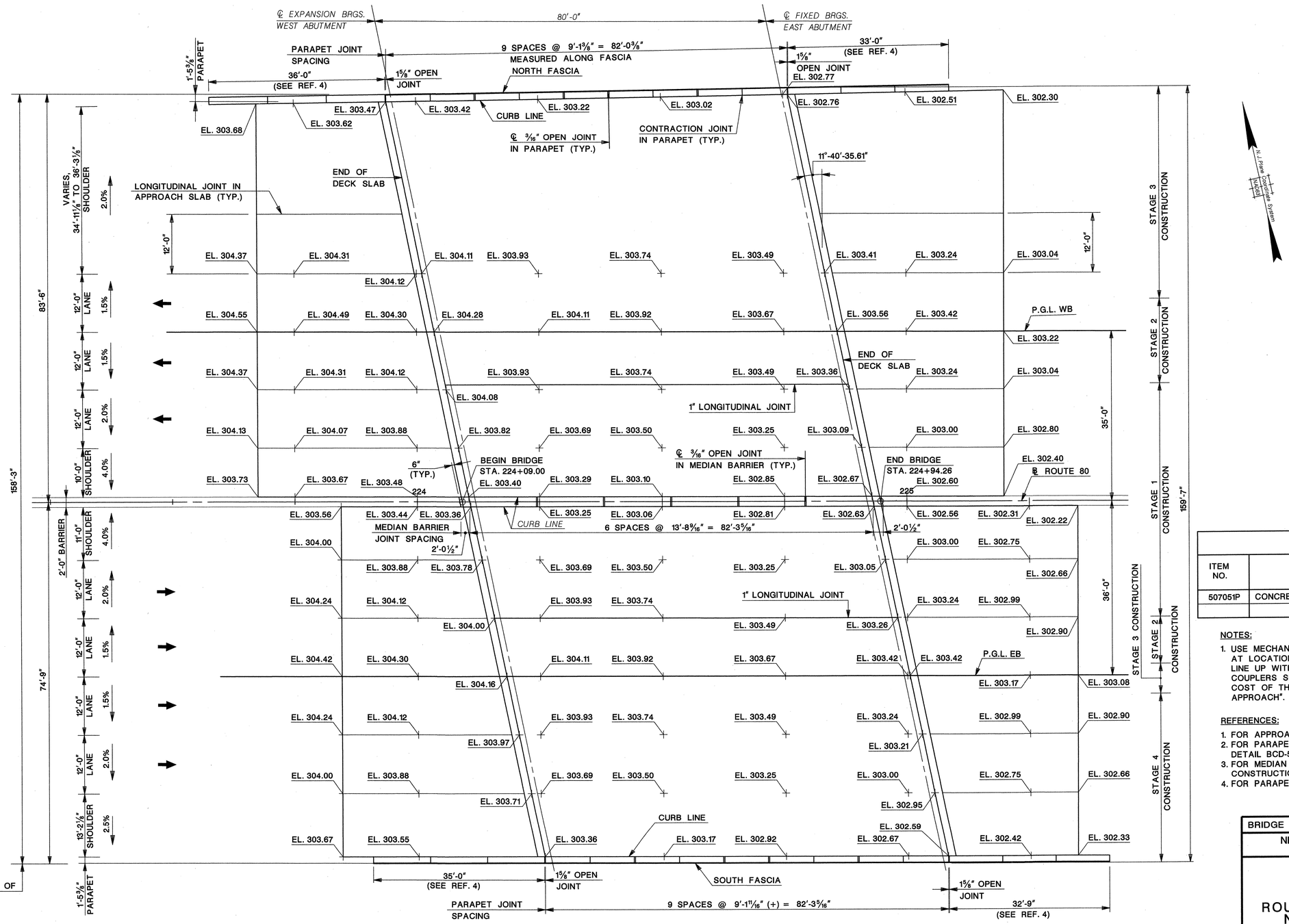

DECK AND APPROACH SLAB GRADING PLAN

SCALE: 1"=10'-0"

1"=10' 10 0 10 20

LEGEND:

→ - DIRECTION OF TRAVEL

REVISION	BY	C'K'D	DATE

QUANTITIES

ITEM NO.	DESCRIPTION	UNIT	CONTRACT QUANTITY
507051P	CONCRETE BRIDGE APPROACH	C.Y.	575

NOTES:

1. USE MECHANICAL COUPLERS IN THE CONCRETE BRIDGE APPROACH AT LOCATIONS WHERE THE LONGITUDINAL JOINT SHOWN DOES NOT LINE UP WITH THE CONSTRUCTION JOINT AT THE STAGE LINE. COUPLERS SHALL CONFORM TO SUBSECTION 905.04. INCLUDE THE COST OF THE COUPLERS IN THE ITEM "CONCRETE BRIDGE APPROACH".

REFERENCES:

1. FOR APPROACH SLAB DETAILS, SEE SHEET NO. B-55.
2. FOR PARAPET JOINT DETAILS, SEE STANDARD BRIDGE CONSTRUCTION DETAIL BCD-507-8.
3. FOR MEDIAN BARRIER JOINT DETAILS, SEE STANDARD BRIDGE CONSTRUCTION DETAIL BCD-507-9.
4. FOR PARAPET ON WINGWALL DETAILS, SEE SHEET NO. B-37.

BRIDGE NO. 2

NEW JERSEY DEPARTMENT OF TRANSPORTATION
BUREAU OF STRUCTURAL ENGINEERING

DECK AND APPROACH SLAB GRADING PLAN

ROUTE 80 BRIDGES OVER ROUTE 287 NORTHBOUND AND SMITH ROAD
CONTRACT NO. 043003714

DEWBERRY-GOODKIND, INC. COA# 24GA28047600

BRIAN D. JECKER, P.E. DATE 8-24-10

NEW JERSEY PROFESSIONAL ENGINEER LICENSE NO. 24GE04088600

BRIDGE SHEET NO. B-45 OF B-58

116
129

CONTROL SECTION		JOB NO.	
DES. BY	W. LANG	CHK. BY	R. GANDIA
DWN. BY	M. NAFIS		

IN CHARGE OF J. SMITH

Dewberry-Goodkind, Inc.
Bloomfield, N.J.

tfelcone 8/20/2010 10:18:21 AM OceTDS700-BW.plt 30-Scale 3056-REDECKING-Route80-287-Smith\3056\Redecking\CAD\Struct\Bridge2\BR2-DECKGRADE.dgn

STATE	FEDERAL PROJECT NO.	SHEET	TOTAL SHEETS
N.J.	BR-080-5(094)		

STRUCTURE NO. 1414-169

STRUCTURE NAME ROUTE I-80 OVER SMITH ROAD

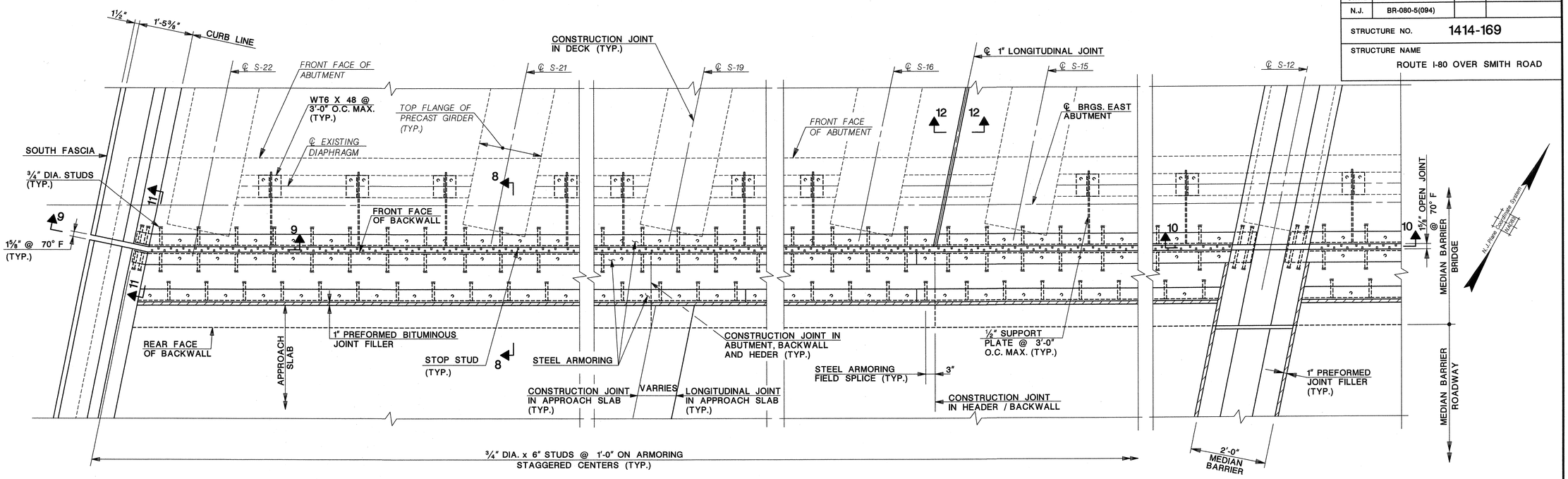

PREFORMED ELASTOMERIC JOINT ASSEMBLY PLAN AT EAST ABUTMENT

(SOUTH SIDE SHOWN, OTHERS SIMILAR)

SCALE: ¾" = 1'-0"

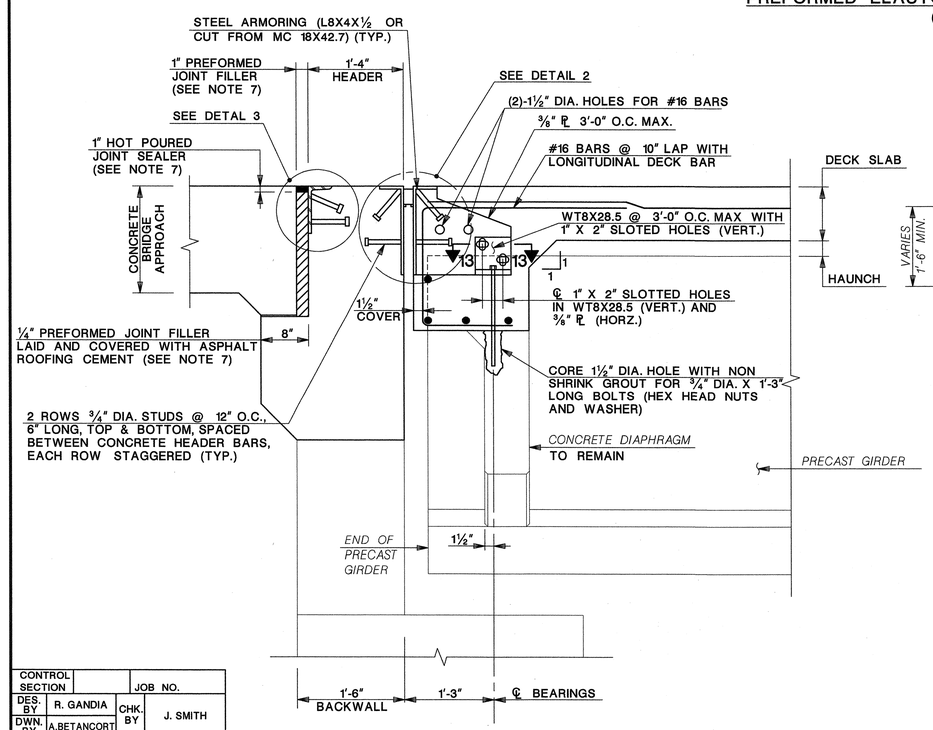

SECTION 8-8

SCALE: 1" = 1'-0"

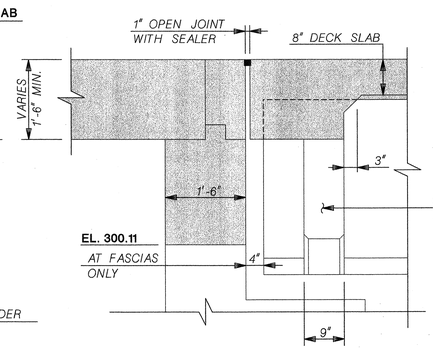

EXISTING OPEN JOINT AT WEST ABUTMENT

SCALE: ¾" = 1'-0"

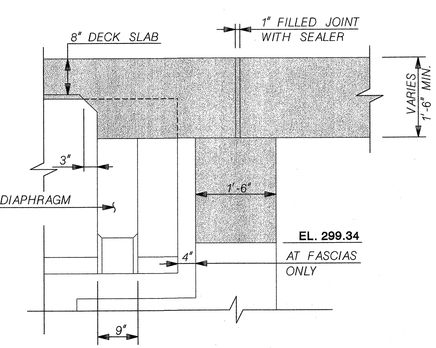

EXISTING FILLED JOINT AT EAST ABUTMENT

SCALE: ¾" = 1'-0"

LEGEND:

- LIMITS OF STRUCTURE REMOVAL

PREFORMED ELASTOMERIC JOINT NOTES:

1. STEEL FOR JOINT ASSEMBLY SHALL BE AASHTO M270 (ASTM A 709).
2. HOT DIP GALVANIZE ALL STRUCTURAL STEEL, INCLUDING ARMORING ON BACK SIDE OF HEADER, AFTER FABRICATION.
3. ALL BOLTS SHALL BE ASTM A325 GALVANIZED HIGH STRENGTH BOLTS.
4. INSTALL AUTOMATIC END WELDED STUDS BEFORE GALVANIZING ASSEMBLY. STEEL AREAS WHERE THE STUDS ARE TO BE WELDED SHALL BE CLEANED OF RUST AND SCALE BY GRINDING.
5. ALL REINFORCEMENT STEEL SHALL BE EPOXY COATED.
6. INCLUDE PAYMENT FOR ALL STEEL COMPONENTS SHOWN, INCLUDING ARMORING ON BACK SIDE OF HEADER, UNDER THE ITEM "2½" BY 2½" PREFORMED ELASTOMERIC JOINT ASSEMBLY".
7. INCLUDE PAYMENT FOR HOT-POURED JOINT SEALER AND PREFORMED JOINT FILLER BETWEEN THE ABUTMENT AND THE CONCRETE APPROACH, UNDER THE ITEM "CONCRETE BRIDGE APPROACH".

REFERENCES:

1. FOR SECTIONS 9-9 THRU 13-13 AND DETAILS 2 AND 3, SEE SHEET NO. B-47.
2. FOR PREFORMED ELASTOMERIC JOINT SEALER DETAIL, SEE STANDARD BRIDGE CONSTRUCTION DETAILS BCD-504-3.5.

BRIDGE NO. 2

NEW JERSEY DEPARTMENT OF TRANSPORTATION
BUREAU OF STRUCTURAL ENGINEERING

DECK JOINT DETAILS I

ROUTE 80 BRIDGES OVER ROUTE 287 NORTHBOUND AND SMITH ROAD
CONTRACT NO. 043003714

CONTROL SECTION		JOB NO.	
DES. BY	R. GANDIA	CHK. BY	J. SMITH
DWN. BY	A.BETANCORT		
IN CHARGE OF	R. GANDIA		

REVISION	BY	C'K'D	DATE

DEWBERRY-GOODKIND, INC. COA# 24GA28047600

BRIAN D. JECKER, P.E. DATE 8-24-10

NEW JERSEY PROFESSIONAL ENGINEER LICENSE NO. 24GE04088600

BRIDGE SHEET NO. B-46 OF B-58

117 / 129

1"=1'-0" 1 6" 0 1 2

¾"=1'-0" 1 6" 0 1 2 3

Dewberry-Goodkind, Inc.
Bloomfield, N.J.

tfelcone 8/20/2010 10:18:25 AM OceTDS700-BW.plt 30-Scale 3056-REDECKING-Route80-287-GS\3056\Redecking\CAD\Struct\Bridge2\BR2-DECKJT1.dgn

STATE	FEDERAL PROJECT NO.	SHEET	TOTAL SHEETS
N.J.	BR-080-5(094)		

STRUCTURE NO. 1414-169

STRUCTURE NAME ROUTE I-80 OVER SMITH ROAD

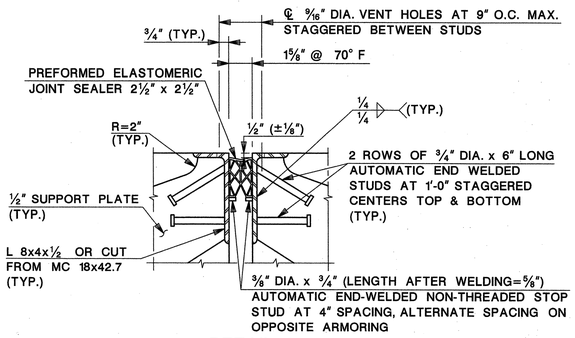

DETAIL 2

SCALE: 1 1/2" = 1'-0"

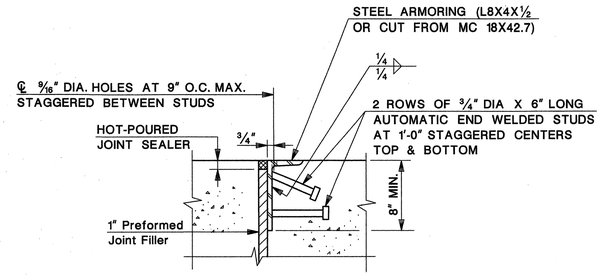

DETAIL 3

SCALE: 1 1/2" = 1'-0"

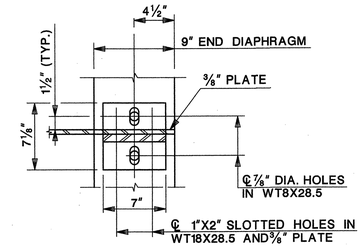

SECTION 13-13

SCALE: 1 1/2" = 1'-0"

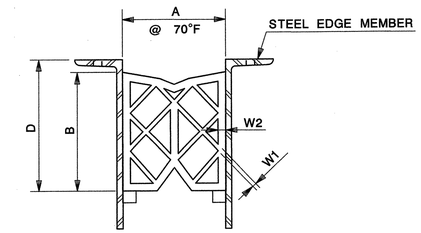

A = COMPRESSED WIDTH OF SEALER AT 70° F.
B = COMPRESSED HEIGHT OF SEALER AT 70° F.
W1 = INTERIOR MEMBRANE MINIMUM THICKNESS.
W2 = EXTERIOR MEMBRANE MINIMUM THICKNESS.

PREFORMED ELASTOMERIC COMPRESSION SEALER	A	B	W1 (MIN.)	W2 (MIN.)
NOMINAL SIZE (IN)	(IN)	(IN)	(IN)	(IN)
2 1/2" X 2 1/2" (NOTE 1)	1 5/8"	(NOTE 2)	3/16"	1/4"

DETAILS OF PREFORMED ELASTOMERIC JOINT SEALER

SCALE: N.T.S.

PREFORMED ELASTOMERIC JOINT SEALER NOTES:

1. THE NOMINAL HEIGHT OF COMPRESSION SEALS MAY VARY BASED ON MANUFACTURER'S SPECIFICATIONS. THE HEIGHT MAY EXCEED THE NOMINAL MANUFACTURER'S SEALER HEIGHT BY NOT MORE THAN 1/4". THE RATIO OF SEALER HEIGHT TO WIDTH SHALL NOT BE LESS THAN 0.9.
2. DIMENSION "B" VARIES DEPENDING ON THE JOINT MANUFACTURER. THE DEPTH "D" OF EMBEDMENT OF THE COMPRESSION SEAL IN THE JOINT SHALL BE SET BY THE FABRICATOR AND IS EQUAL TO THE COMPRESSED SEAL HEIGHT PLUS 1/2" (±1/8").
3. ALL PREFORMED ELASTOMERIC COMPRESSION SEALS SHALL CONFORM TO THE MATERIAL REQUIREMENTS OF SUBSECTION 908.03 OF THE 2007 NJDOT STANDARD SPECIFICATIONS FOR ROAD AND BRIDGE CONSTRUCTION AS MODIFIED BY THE SPECIAL PROVISIONS.
4. THE COST FOR THE LONGITUDINAL JOINTS SHALL BE INCLUDED IN THE ITEM, "CONCRETE BRIDGE APPROACH".
5. THE COST FOR INTALLING COLD-POURED JOINT SEALER WITH BACKER ROD SHALL BE INCLUDED IN THE ITEM "CONCRETE BRIDG PARAPET, HPC".

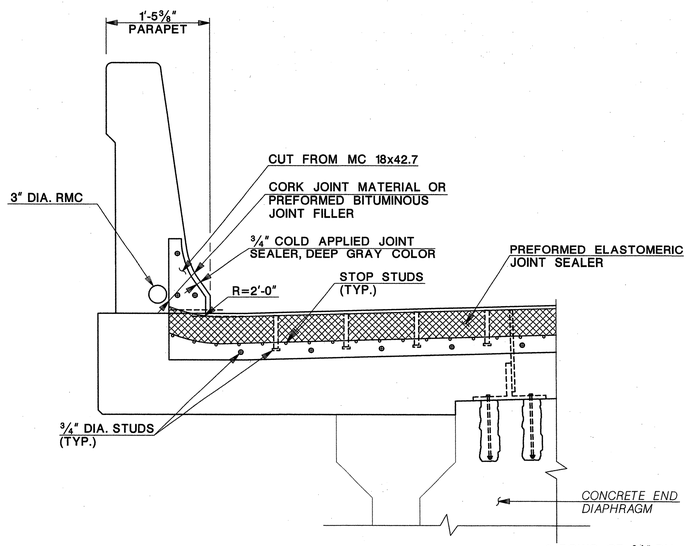

SECTION 9-9

SCALE: 1" = 1'-0"

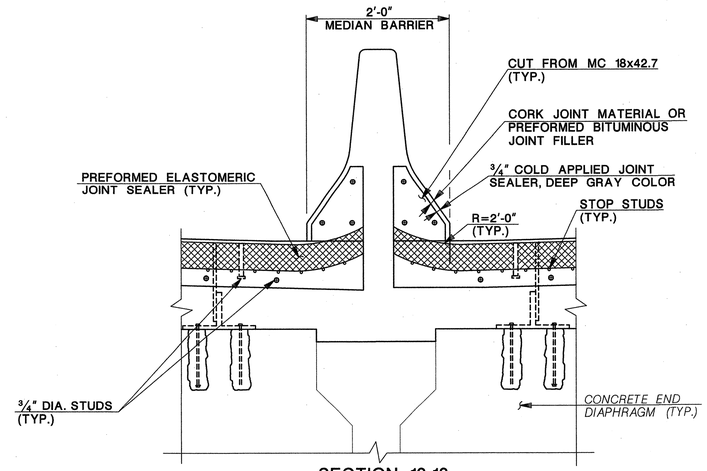

SECTION 10-10

SCALE: 1" = 1'-0"

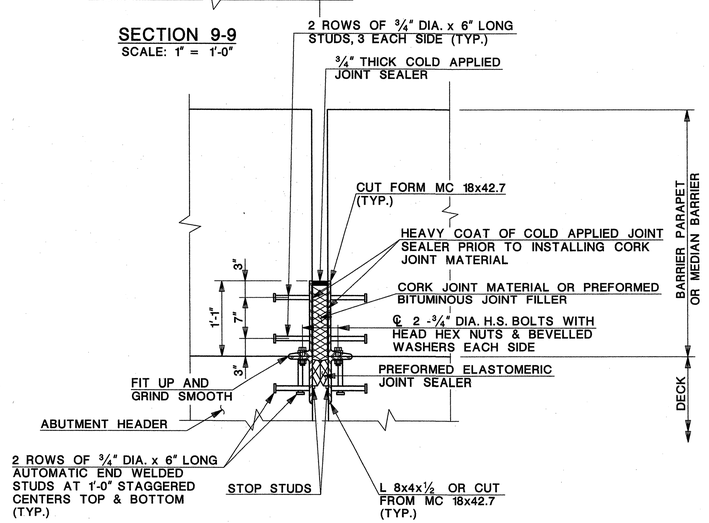

SECTION 11-11

SCALE: 1" = 1'-0"

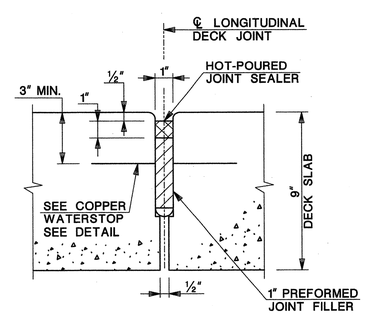

SECTION 12-12

SCALE: 3" = 1'-0"

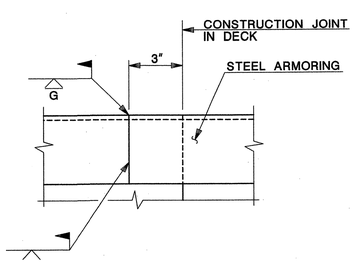

JOINT ARMOR FIELD SPLICE DETAIL

SCALE: 1 1/2" = 1'-0"

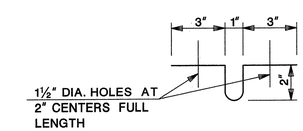

COPPER WATERSTOP DETAIL

SCALE: N.T.S.

CONTROL SECTION		JOB NO.	
DES. BY	R. GANDIA	CHK. BY	J. SMITH
DWN. BY	A.BETANCOURT		
IN CHARGE OF	R. GANDIA		

3"=1'-0" 0 3" 6" 9"
1 1/2"=1'-0" 1 9" 6" 3" 0 1
1"=1'-0" 1 6" 0 1 2

REVISION	BY	C'K'D	DATE

BRIDGE NO. 2

NEW JERSEY DEPARTMENT OF TRANSPORTATION
BUREAU OF STRUCTURAL ENGINEERING

DECK JOINT DETAILS II

ROUTE 80 BRIDGES OVER ROUTE 287
NORTHBOUND AND SMITH ROAD
CONTRACT NO. 043003714

DEWBERRY-GOODKIND, INC. COA# 24GA28047600

BRIAN D. JECKER, P.E. DATE 8-24-10

NEW JERSEY PROFESSIONAL ENGINEER LICENSE. NO. 24GE04088600

BRIDGE SHEET NO. B-47 OF B-58

118 / 129

Dewberry-Goodkind, Inc.
Bloomfield, N.J.

STATE	FEDERAL PROJECT NO.	SHEET	TOTAL SHEETS
N.J.	BR-080-5(094)		

STRUCTURE NO. 1414-169

STRUCTURE NAME
ROUTE I-80 OVER SMITH ROAD

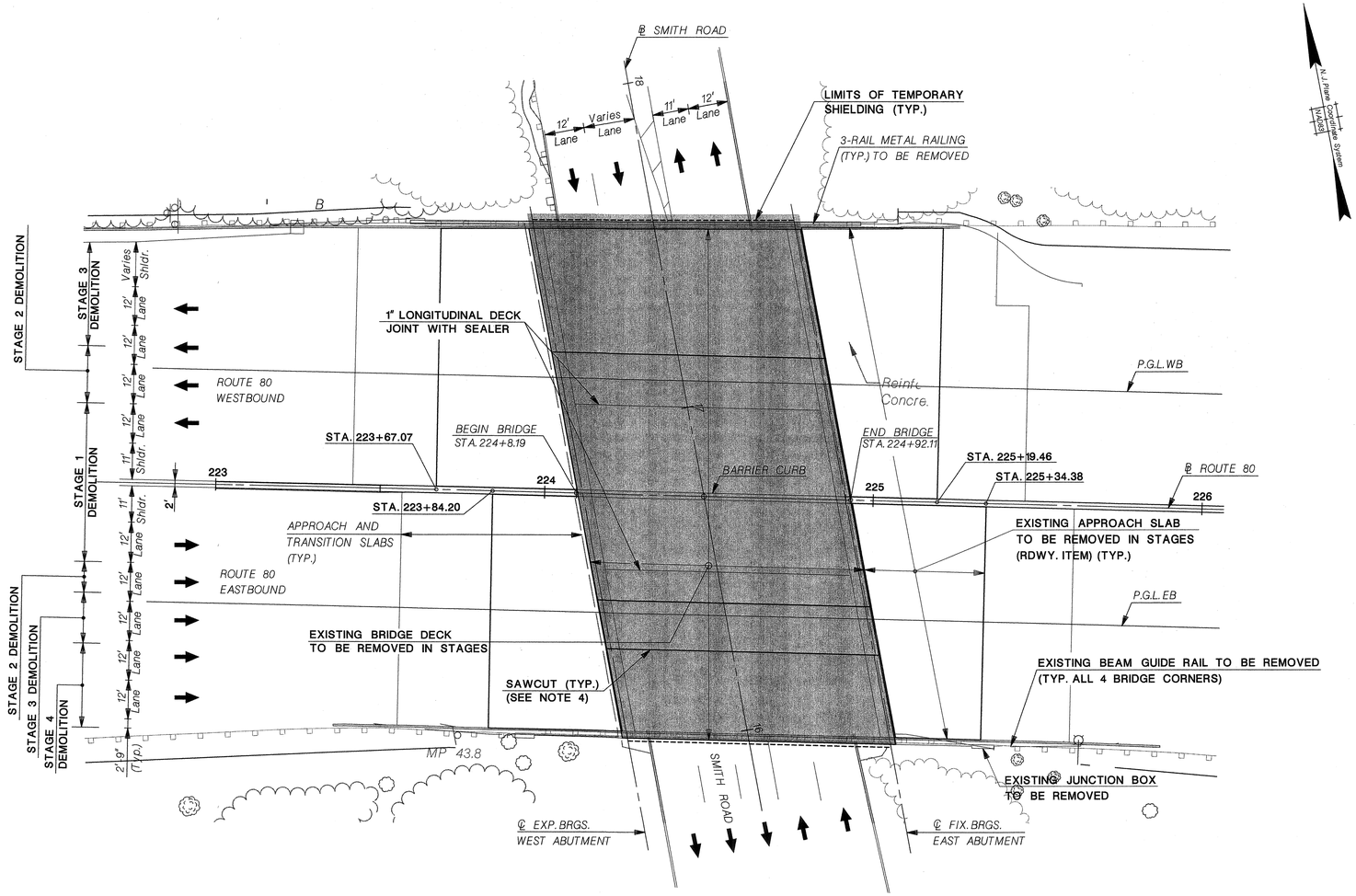

PLAN
SCALE: 1"=20'-0"

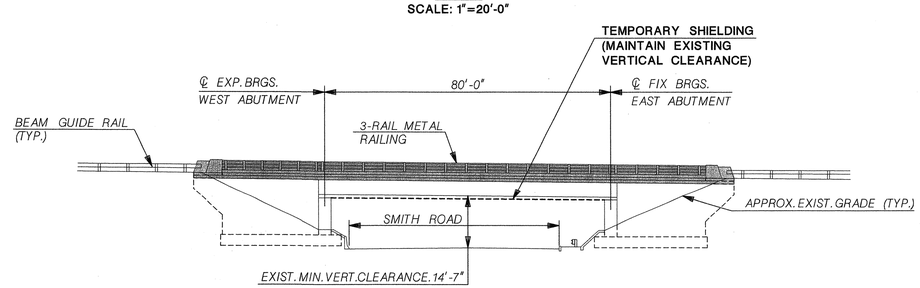

ELEVATION
SCALE: 1"=20'-0"

QUANTITIES

ITEM NO.	DESCRIPTION	UNIT	CONTRACT QUANTITY
201006P	CLEARING SITE, BRIDGE (STRUCTURE NO. 1414-169)	LUMP SUM	LUMP SUM
201039P	TEMPORARY SHIELDING	LUMP SUM	LUMP SUM

ESTIMATE OF QUANTITIES TO BE REMOVED

DESCRIPTION	UNIT	QUANTITY
CONCRETE ABUTMENT WALL	C.Y.	40
CONCRETE WINGWALL	C.Y.	13
CONCRETE DECK	C.Y.	385
CONCRETE SIDEWALK	C.Y.	50
24" X 32" CONCRETE BARRIER CURB, BRIDGE	L.F.	87
METAL RAILING	L.F.	271
JUNCTION BOX	UNIT	1

NOTES:

1. THE INFORMATION SHOWN ON THIS PLAN WAS TAKEN FROM THE EXISTING PLANS AVAILABLE AT NJDOT ENGINEERING DOCUMENTS UNIT AND IS FOR INFORMATIONAL PURPOSES ONLY. THE DATA SHOWN IS NOT GUARANTEED TO BE CORRECT, AND IS NOT INTENDED TO BE COMPLETE OR ALL INCLUSIVE. VISIT THE SITE PRIOR TO SUBMITTING BIDS TO ASCERTAIN THE FULL EXTENT OF WORK.
2. ALL ESTIMATED QUANTITIES FOR REMOVAL ARE BASED ON THE EXISTING PLANS.
3. SAW CUT THE EXISTING BRIDGE DECK AT THE CONSTRUCTION STAGE CONSTRUCTION JOINTS. INCLUDE SAW CUTTING THE BRIDGE DECK UNDER THE PAY ITEM "CLEARING SITE, BRIDGE (STRUCTURE NO. 1414-169)".
4. SAW CUT THE EXISTING ABUTMENTS AND WINGWALLS TO A DEPTH OF 1" AT CONSTRUCTION JOINTS. INCLUDE SAW CUTTING THE ABUTMENTS AND WINGWALLS UNDER THE PAY ITEM "CLEARING SITE, BRIDGE (STRUCTURE NO. 1414-169)".
5. INCLUDE ANY WORK RELATED TO DEMOLITION ACTIVITIES AND DISPOSAL OF DEMOLITION MATERIALS UNDER THE PAY ITEM "CLEARING SITE, BRIDGE (STRUCTURE NO. 1414-169)".
6. PERFORM A SURVEY OF THE EXISTING TOP OF PRESTRESSED CONCRETE BEAM ELEVATIONS PRIOR TO AND AFTER DECK DEMOLITION TO ESTABLISH PROPER SCREED ELEVATIONS. SET ALL SURVEY POINTS AT THE SAME LOCATION AND USE THE SAME DATUM. AT A MINIMUM, SET SURVEY POINTS AT THE BEAM'S QUARTER POINTS. INCLUDE ALL COSTS UNDER THE PAY ITEM "CLEARING SITE, BRIDGE (STRUCTURE NO. 1414-169)".

REFERENCES

1. FOR ABUTMENT DEMOLITION PLAN, SEE SHEET NO. B-49.
2. FOR WINGWALL DEMOLITION PLAN, SEE SHEET NO. B-50.
3. FOR CONSTRUCTION STAGING, SEE SHEET NO. B-32.

LEGEND:

- DIRECTION OF TRAVEL
- TO BE DEMOLISHED

1"=20' 20 0 20 40

REVISION	BY	C'K'D	DATE

BRIDGE NO. 2

NEW JERSEY DEPARTMENT OF TRANSPORTATION
BUREAU OF STRUCTURAL ENGINEERING

SUPERSTRUCTURE DEMOLITION PLAN

ROUTE 80 BRIDGES OVER ROUTE 287 NORTHBOUND AND SMITH ROAD
CONTRACT NO. 043003714

DEWBERRY-GOODKIND, INC. COA# 24GA28047600

BRIAN D. JECKER, P.E. DATE 8-24-10
NEW JERSEY PROFESSIONAL ENGINEER LICENSE NO. 24GE04088600

BRIDGE SHEET NO. B-48 OF B-58

119
129

CONTROL SECTION		JOB NO.	
DES. BY	W. LANG	CHK. BY	J. SMITH
DWN. BY	M. NAFIS		

IN CHARGE OF J. SMITH

Dewberry-Goodkind, Inc.
Bloomfield, N.J.

tfelcone 8/20/2010 10:18:36 AM OceTDS700-BW.plt 30-Scale 3056-REDECKING-Route80-287-GSA,3056\Redecking\CAD\Struct\Bridge2\BR2-DEMO1.DGN

STATE	FEDERAL PROJECT NO.	SHEET	TOTAL SHEETS
N.J.	BR-080-5(094)		

STRUCTURE NO. 1414-169

STRUCTURE NAME
ROUTE I-80 OVER SMITH ROAD

EASTBOUND WESTBOUND

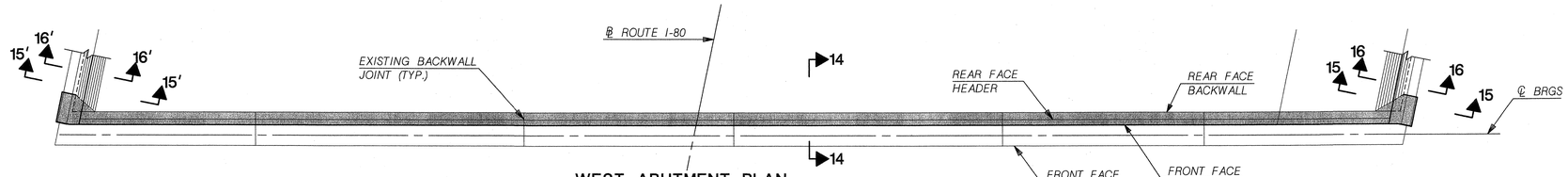

WEST ABUTMENT PLAN
SCALE: 1/8" = 1'-0"

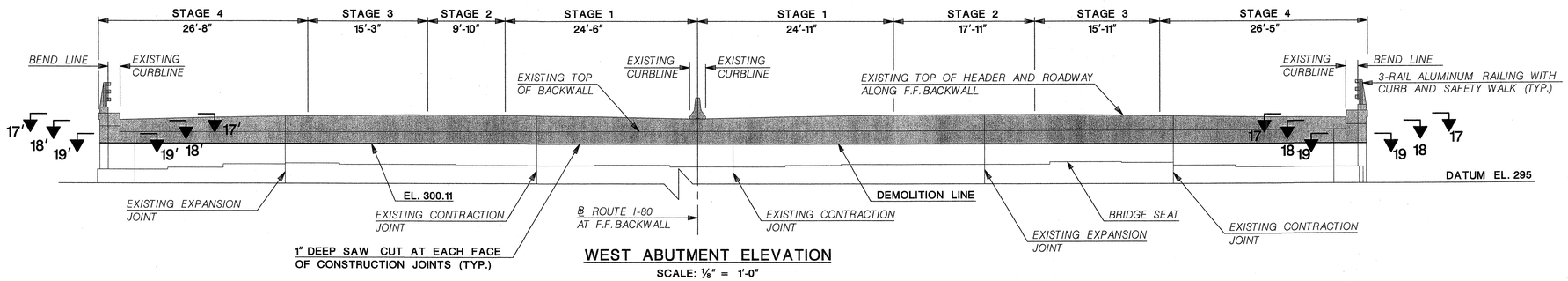

WEST ABUTMENT ELEVATION
SCALE: 1/8" = 1'-0"

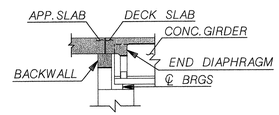

SECTION 14-14
SCALE: 1/8" = 1'-0"

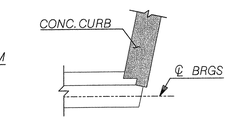

SECTION 17-17
SECTION 17′-17′ SIMILAR
SCALE: 1/8" = 1'-0"

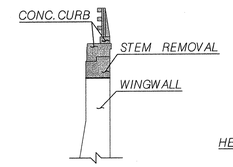

SECTION 15-15
SECTION 15′-15′ SIMILAR
SCALE: 1/8" = 1'-0"

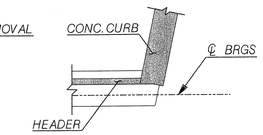

SECTION 18-18
SECTION 18′-18′ SIMILAR
SCALE: 1/8" = 1'-0"

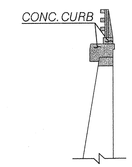

SECTION 16-16
SECTION 16′-16′ SIMILAR
SCALE: 1/8" = 1'-0"

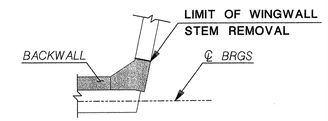

SECTION 19-19
SECTION 19′-19′ SIMILAR
SCALE: 1/8" = 1'-0"

WESTBOUND EASTBOUND

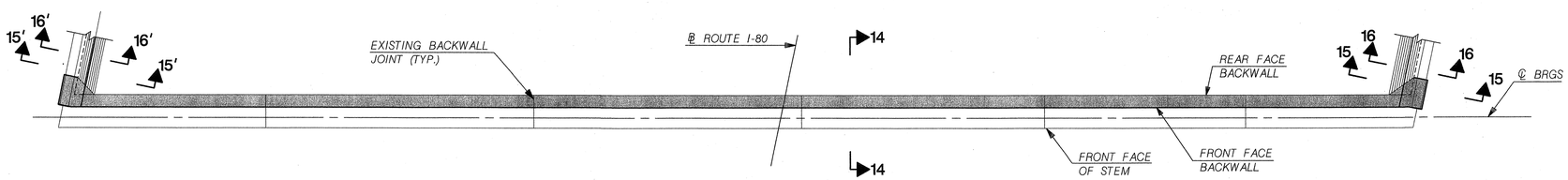

EAST ABUTMENT PLAN
SCALE: 1/8" = 1'-0"

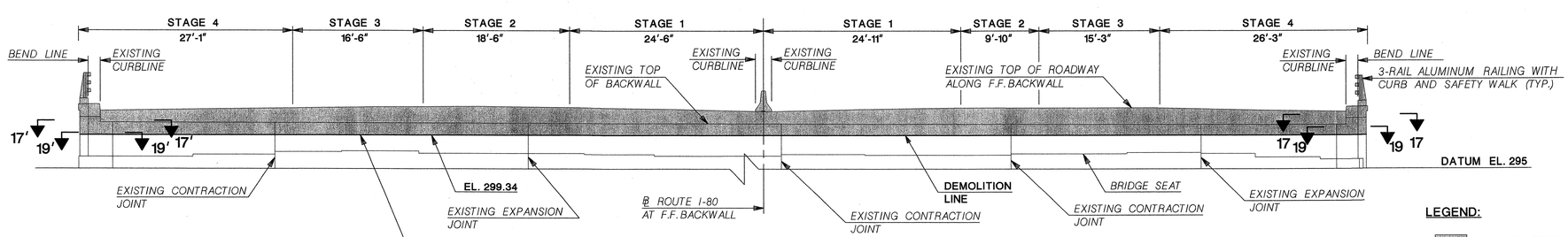

EAST ABUTMENT ELEVATION
SCALE: 1/8" = 1'-0"

REFERENCES:
1. FOR WINGWALL DEMOLITION PLAN, SEE SHEET NO. B-50.

LEGEND:
- TO BE DEMOLISHED
F.F. - FRONT FACE

1/8"=1'-0" 8 0 8 16

REVISION	BY	C'K'D	DATE

BRIDGE NO. 2

NEW JERSEY DEPARTMENT OF TRANSPORTATION
BUREAU OF STRUCTURAL ENGINEERING

ABUTMENT DEMOLITION PLAN

ROUTE 80 BRIDGES OVER ROUTE 287
NORTHBOUND AND SMITH ROAD
CONTRACT NO. 043003714

DEWBERRY-GOODKIND, INC. COA# 24GA28047600
BRIAN D. JECKER, P.E. DATE 8-24-10
NEW JERSEY PROFESSIONAL ENGINEER LICENSE. NO. 24GE04088600

BRIDGE SHEET NO. B-49 OF B-58

120
129

CONTROL SECTION		JOB NO.	
DES. BY	W. LANG	CHK. BY	J. SMITH
DWN. BY	M. NAFIS		

IN CHARGE OF J. SMITH

Dewberry-Goodkind, Inc.
Bloomfield, N.J.

tfelcone 8/20/2010 10:19:51 AM OceTDS700-BW.plt 30-Scale 3056-REDECKING-Route80-287-Q/A,3056\Redecking\CAD\Struct\Bridge2\BR2-DEMO2.dgn

STATE	FEDERAL PROJECT NO.	SHEET	TOTAL SHEETS
N.J.	BR-080-5(094)		

STRUCTURE NO. 1414-169

STRUCTURE NAME
ROUTE I-80 OVER SMITH ROAD

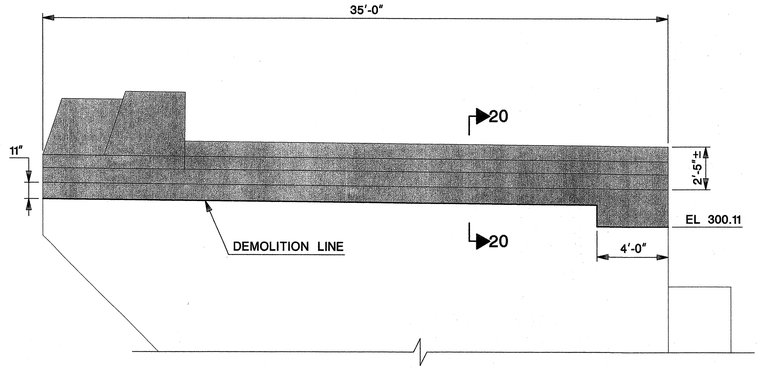

SOUTHWEST WINGWALL ELEVATION
SCALE: ¼" = 1'-0"

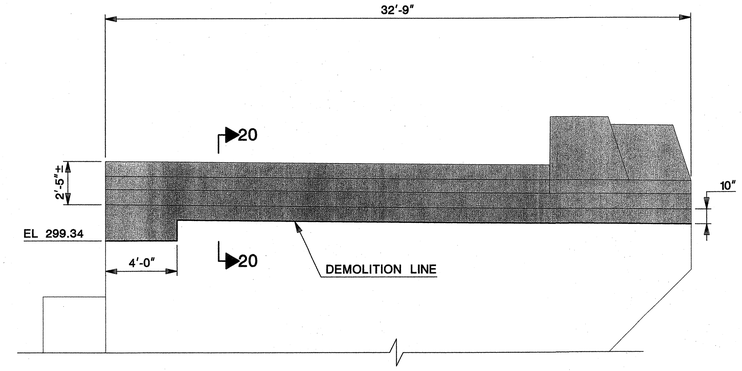

SOUTHEAST WINGWALL ELEVATION
SCALE: ¼" = 1'-0"

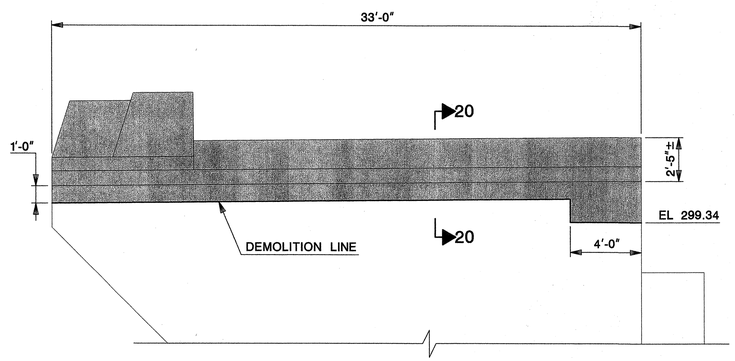

NORTHEAST WINGWALL ELEVATION
SCALE: ¼" = 1'-0"

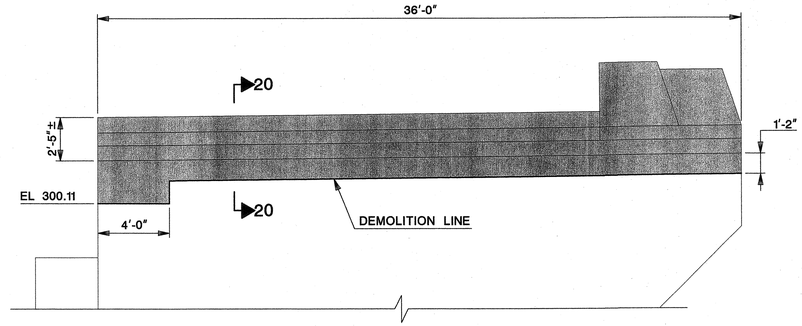

NORTHWEST WINGWALL ELEVATION
SCALE: ¼" = 1'-0"

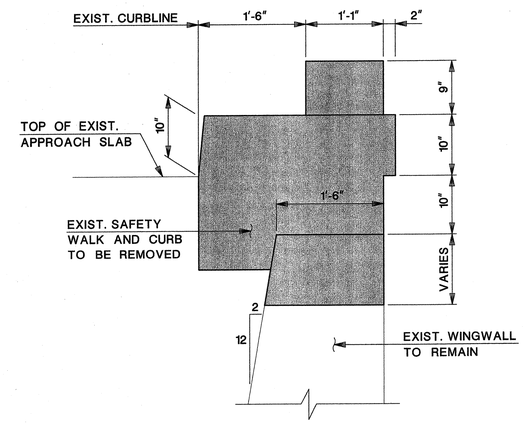

SECTION 20-20
SCALE: 1" = 1'-0"

NOTE:
1. 3-RAIL ALUMINUM RAILING NOT SHOWN FOR CLARITY.

LEGEND:
- TO BE DEMOLISHED

1"=1'-0" 1 6" 0 1 2

¼"=1'-0" 3 2 1 0 3 6 9

REVISION	BY	C'K'D	DATE

BRIDGE NO. 2

NEW JERSEY DEPARTMENT OF TRANSPORTATION
BUREAU OF STRUCTURAL ENGINEERING

WINGWALL DEMOLITION PLAN

ROUTE 80 BRIDGES OVER ROUTE 287
NORTHBOUND AND SMITH ROAD
CONTRACT NO. 043003714

DEWBERRY-GOODKIND, INC. COA# 24GA28047600

BRIAN D. JECKER, P.E. DATE 8-24-10

NEW JERSEY PROFESSIONAL ENGINEER LICENSE NO. 24GE04088600

BRIDGE SHEET NO. B-50 OF B-58

121
129

CONTROL SECTION		JOB NO.	
DES. BY	R. GANDIA	CHK. BY	B. JECKER
DWN. BY	M. NAFIS		
IN CHARGE OF J. SMITH			

Dewberry-Goodkind, Inc.
Bloomfield, N.J.

tfelcone 8/20/2010 10:19:54 AM OceTDS700-BW.plt 30-Scale 3056-REDECKING-Route80-287-Q3\3056\Redecking\CAD\Struct\Bridge2\BR2-DEMO3.dgn

STATE	FEDERAL PROJECT NO.	SHEET	TOTAL SHEETS
N.J.	BR-080-5(094)		

STRUCTURE NO. **1414-169**

STRUCTURE NAME
ROUTE I-80 OVER SMITH ROAD

WEST ABUTMENT

MARK	SIZE	TYPE	LENGTH	QTY	A	B	C	D	E	F	G	H	REMARKS
STAGE 1													
BACKWALL - EPOXY COATED													
ABE1301	13	2	6-9	50	2-11	0-11	2-11						VERT U-BARS
ABE1303	13	STR	3-10	5									HORIZ EF (MC)
ABE1304	13	STR	24-8	5									HORIZ EF
ABE1305	13	STR	20-3	5									HORIZ EF (MC)
ABE1327	13	2	6-11	3	2-6	1-6	2-11						VERT MEDIAN
ABE1601	16	12	2-7	106	0-6	1-7.2	0-5.5	0-3.7					TIE HOOKS
ABE1901	19	STR	4-0	106									DOWELS
ABE1902	19	35	5-3	53	1-1.7	0-6	0-11.7	1-6	1-2	0-4.2	0-4.2		VERT BRACKET
SUBTOTAL THIS SECTION					1744 LB								
HEADWALL - EPOXY COATED													
AHE1301	13	STR	3-10	6									HORIZ EF (MC)
AHE1302	13	STR	24-8	6									HORIZ EF
AHE1303	13	STR	20-3	6									HORIZ EF (MC)
AHE1325	13	23	7-5	3	1-3.2	1-6.5	1-9.5	0-8.7	1-0.5				VERT MEDIAN
AHE1326	13	38	4-8	3	1-6	1-8	1-6	1-5.5	0-3.7				HORIZ MEDIAN
SUBTOTAL THIS SECTION					220 LB								
MEDIAN BARRIER - EPOXY COATED													
BPE1301	13	22	5-2	3	2-4.5	0-4.5	2-4.5	0-6	0-1.5				VERT MEDIAN
BPE1302	13	STR	1-9	5									HORIZ MEDIAN
SUBTOTAL THIS SECTION					16 LB								
EASTBOUND ROADWAY - STAGE 2													
BACKWALL - EPOXY COATED													
ABE1301	13	2	6-9	10	2-11	0-11	2-11						VERT U-BARS
ABE1306	13	STR	5-10	10									HORIZ EF (MC)
ABE1601	16	12	2-7	20	0-6	1-7.2	0-5.5	0-3.7					TIE HOOK
ABE1901	19	STR	4-0	20									DOWELS
ABE1902	19	35	5-3	10	1-1.7	0-6	0-11.7	1-6	1-2	0-4.2	0-4.2		VERT BRACKET
SUBTOTAL THIS SECTION					338 LB								
HEADWALL - EPOXY COATED													
AHE1304	13	STR	5-10	12									HORIZ EF (MC)
SUBTOTAL THIS SECTION					47 LB								
EASTBOUND ROADWAY - STAGE 3													
BACKWALL - EPOXY COATED													
ABE1301	13	2	6-9	16	2-11	0-11	2-11						VERT U-BARS
ABE1307	13	STR	8-7	10									HORIZ EF (MC)
ABE1601	16	12	2-7	32	0-6	1-7.2	0-5.5	0-3.7					TIE HOOKS
ABE1901	19	STR	4-0	32									DOWELS
ABE1902	19	35	5-3	16	1-1.7	0-6	0-11.7	1-6	1-2	0-4.2	0-4.2		VERT BRACKET
SUBTOTAL THIS SECTION					535 LB								
HEADWALL - EPOXY COATED													
AHE1305	13	STR	8-7	12									HORIZ EF (MC)
SUBTOTAL THIS SECTION					69 LB								
EASTBOUND ROADWAY - STAGE 4													
BACKWALL - EPOXY COATED													
ABE1301	13	2	6-9	26	2-11	0-11	2-11						VERT U-BARS
ABE1308	13	STR	2-9	5									HORIZ EF (MC)
ABE1309	13	STR	21-9	5									HORIZ EF
ABE1601	16	12	2-7	52	0-6	1-7.2	0-5.5	0-3.7					TIE HOOKS
ABE1901	19	STR	4-0	52									DOWELS
ABE1902	19	35	5-3	26	1-1.7	0-6	0-11.7	1-6	1-2	0-4.2	0-4.2		VERT BRACKET
SUBTOTAL THIS SECTION					858 LB								
HEADWALL - EPOXY COATED													
AHE1306	13	STR	2-9	6									HORIZ EF (MC)
AHE1307	13	STR	21-9	6									HORIZ EF
SUBTOTAL THIS SECTION					98 LB								
WESTBOUND ROADWAY - STAGE 2													
BACKWALL - EPOXY COATED													
ABE1301	13	2	6-9	19	2-11	0-11	2-11						VERT U-BARS
ABE1310	13	STR	6-2	5									HORIZ EF (MC)
ABE1311	13	STR	11-5	5									HORIZ EF (MC)
ABE1601	16	12	2-7	38	0-6	1-7.2	0-5.5	0-3.7					TIE HOOKS
ABE1901	19	STR	4-0	38									DOWELS
ABE1902	19	35	5-3	19	1-1.7	0-6	0-11.7	1-6	1-2	0-4.2	0-4.2		VERT BRACKET
SUBTOTAL THIS SECTION					626 LB								

WEST ABUTMENT

MARK	SIZE	TYPE	LENGTH	QTY	A	B	C	D	E	F	G	H	REMARKS
HEADWALL - EPOXY COATED													
AHE1308	13	STR	6-2	6									HORIZ EF (MC)
AHE1309	13	STR	11-5	6									HORIZ EF (MC)
SUBTOTAL THIS SECTION					70 LB								
WESTBOUND ROADWAY - STAGE 3													
BACKWALL - EPOXY COATED													
ABE1301	13	2	6-9	42	2-11	0-11	2-11						VERT U-BARS
ABE1312	13	STR	17-6	5									HORIZ EF (MC)
ABE1314	13	STR	22-11	5									HORIZ EF
ABE1601	16	12	2-5	84	0-4.5	1-8	0-4.5	0-3					TIE HOOKS
ABE1901	19	STR	4-0	84									DOWELS
ABE1902	19	35	5-3	42	1-1.7	0-6	0-11.7	1-6	1-2	0-4.2	0-4.2		VERT BRACKET
SUBTOTAL THIS SECTION					1373 LB								
HEADWALL - EPOXY COATED													
AHE1310	13	STR	17-6	6									HORIZ EF (MC)
AHE1312	13	STR	22-11	6									HORIZ EF
SUBTOTAL THIS SECTION					162 LB								

BAR BENDING DIAGRAMS

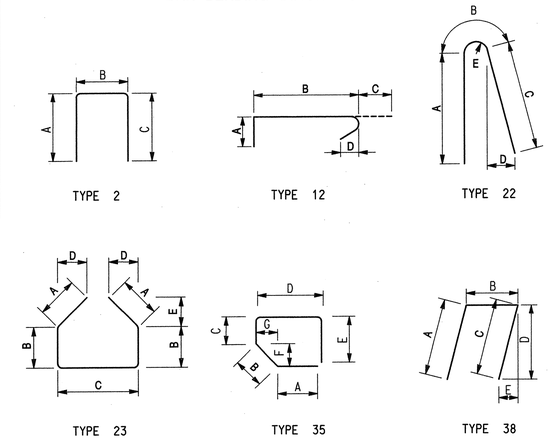

LEGEND:

F.F. - FRONT FACE
E.F. - EACH FACE
R.F. - REAR FACE
VERT - VERTICAL
HORIZ - HORIZONTAL
TRANS - TRANSVERSE
LONG - LONGITUDINAL
PPT - PARAPET

NOTE:

(MC) - MECHANICAL CONNECTOR REQUIRED AT STAGE LINE CONSTRUCTION JOINTS. ADJUST BAR DIMENSIONS TO SUIT CONNECTOR TYPE.

CONTROL SECTION		JOB NO.	
DES. BY	R. PAREJA	CHK. BY	T. STRNAD
DWN. BY	M. NAFIS		

IN CHARGE OF A. SESHADRI

REVISION	BY	C'K'D	DATE

BRIDGE NO. 2

NEW JERSEY DEPARTMENT OF TRANSPORTATION
BUREAU OF STRUCTURAL ENGINEERING

BAR LIST I

ROUTE 80 BRIDGES OVER ROUTE 287
NORTHBOUND AND SMITH ROAD
CONTRACT NO. 043003714

DEWBERRY-GOODKIND, INC. COA # 24GA28047600

BRIAN D. JECKER, P.E. DATE 8-24-10
NEW JERSEY PROFESSIONAL ENGINEER LICENSE. NO. 24GE04088600

BRIDGE SHEET NO. B-51 OF B-58

122
129

Dewberry-Goodkind, Inc.
Bloomfield, N.J.

STATE	FEDERAL PROJECT NO.	SHEET	TOTAL SHEETS
N.J.	BR-080-5(094)		

STRUCTURE NO. **1414-169**

STRUCTURE NAME
ROUTE I-80 OVER SMITH ROAD

EAST ABUTMENT

MARK	SIZE	TYPE	LENGTH	QTY	A	B	C	D	E	F	G	H	REMARKS
STAGE 1													
BACKWALL - EPOXY COATED													
ABE1301	13	2	6-9	48	2-11	0-11	2-11						VERT U-BARS
ABE1315	13	STR	26-7	5									HORIZ EF (MC)
ABE1316	13	STR	22-6	5									HORIZ EF (MC)
ABE1327	13	2	6-11	3	2-6	1-6	2-11						VERT MEDIAN
ABE1601	16	12	2-7	102	0-6	1-7.2	0-5.5	0-3.7					TIE HOOKS
ABE1901	19	STR	4-0	102									DOWELS
ABE1902	19	35	5-3	51	1-1.7	0-6	0-11.7	1-6	1-2	0-4.2	0-4.2		VERT BRACKET
SUBTOTAL THIS SECTION					1685 LB								
HEADWALL - EPOXY COATED													
AHE1313	13	STR	26-7	6									HORIZ EF (MC)
AHE1314	13	STR	22-6	6									HORIZ EF (MC)
AHE1325	13	23	7-5	3	1-3.2	1-6.5	1-9.5	0-8.7	1-0.5				VERT MEDIAN
AHE1326	13	38	4-8	3	1-6	1-8	1-6	1-5.5	0-3.7				HORIZ MEDIAN
SUBTOTAL THIS SECTION					221 LB								
MEDIAN BARRIER - EPOXY COATED													
BPE1301	13	22	5-2	3	2-4.5	0-4.5	2-4.5	0-6	0-1.5				MEDIAN VERT
BPE1302	13	STR	1-9	5									MEDIAN HORIZ
SUBTOTAL THIS SECTION					16 LB								
EASTBOUND ROADWAY - STAGE 2													
BACKWALL - EPOXY COATED													
ABE1301	13	2	6-9	11	2-11	0-11	2-11						VERT U-BARS
ABE1317	13	STR	3-5	5									HORIZ EF (MC)
ABE1318	13	STR	6-1	5									HORIZ EF (MC)
ABE1601	16	12	2-7	22	0-6	1-7.2	0-5.5	0-3.7					TIE HOOKS
ABE1901	19	STR	4-0	22									DOWELS
ABE1902	19	35	5-3	11	1-1.7	0-6	0-11.7	1-6	1-2	0-4.2	0-4.2		VERT BRACKET
SUBTOTAL THIS SECTION					361 LB								
HEADWALL - EPOXY COATED													
AHE1315	13	STR	3-5	6									HORIZ EF (MC)
AHE1316	13	STR	6-1	6									HORIZ EF (MC)
SUBTOTAL THIS SECTION					38 LB								
EASTBOUND ROADWAY - STAGE 3													
BACKWALL - EPOXY COATED													
ABE1301	13	2	6-9	16	2-11	0-11	2-11						VERT U-BARS
ABE1319	13	STR	8-7	10									HORIZ EF (MC)
ABE1601	16	12	2-7	32	0-6	1-7.2	0-5.5	0-3.7					TIE HOOKS
ABE1901	19	STR	4-0	32									DOWELS
ABE1902	19	35	5-3	16	1-1.7	0-6	0-11.7	1-6	1-2	0-4.2	0-4.2		VERT BRACKET
SUBTOTAL THIS SECTION					535 LB								
HEADWALL - EPOXY COATED													
AHE1317	13	STR	8-7	12									HORIZ EF (MC)
SUBTOTAL THIS SECTION					69 LB								
EASTBOUND ROADWAY - STAGE 4													
BACKWALL - EPOXY COATED													
ABE1301	13	2	6-9	26	2-11	0-11	2-11						VERT U-BARS
ABE1320	13	STR	5-0	5									HORIZ EF (MC)
ABE1321	13	STR	19-4	5									HORIZ EF
ABE1601	16	12	2-7	52	0-6	1-7.2	0-5.5	0-3.7					TIE HOOKS
ABE1901	19	STR	4-0	52									DOWELS
ABE1902	19	35	5-3	26	1-1.7	0-6	0-11.7	1-6	1-2	0-4.2	0-4.2		VERT BRACKET
SUBTOTAL THIS SECTION					857 LB								
HEADWALL - EPOXY COATED													
AHE1318	13	STR	5-0	6									HORIZ EF (MC)
AHE1319	13	STR	19-4	6									HORIZ EF
SUBTOTAL THIS SECTION					98 LB								
WESTBOUND ROADWAY - STAGE 2													
BACKWALL - EPOXY COATED													
ABE1301	13	2	6-9	20	2-11	0-11	2-11						VERT U-BARS
ABE1322	13	STR	5-1	5									HORIZ EF (MC)
ABE1323	13	STR	13-1	5									HORIZ EF (MC)
ABE1601	16	12	2-7	40	0-6	1-7.2	0-5.5	0-3.7					TIE HOOKS
ABE1901	19	STR	4-0	40									DOWELS
ABE1902	19	35	5-3	20	1-1.7	0-6	0-11.7	1-6	1-2	0-4.2	0-4.2		VERT BRACKET
SUBTOTAL THIS SECTION					658 LB								

EAST ABUTMENT

MARK	SIZE	TYPE	LENGTH	QTY	A	B	C	D	E	F	G	H	REMARKS
HEADWALL - EPOXY COATED													
AHE1320	13	STR	5-1	6									HORIZ EF (MC)
AHE1321	13	STR	13-1	6									HORIZ EF (MC)
SUBTOTAL THIS SECTION					73 LB								
WESTBOUND ROADWAY - STAGE 3													
BACKWALL - EPOXY COATED													
ABE1301	13	2	6-9	44	2-11	0-11	2-11						VERT U-BARS
ABE1324	13	STR	18-7	5									HORIZ EF (MC)
ABE1326	13	STR	22-11	5									HORIZ EF
ABE1601	16	12	2-7	88	0-6	1-7.2	0-5.5	0-3.7					TIE HOOKS
ABE1901	19	STR	4-0	88									DOWELS
ABE1902	19	35	5-3	44	1-1.7	0-6	0-11.7	1-6	1-2	0-4.2	0-4.2		VERT BRACKET
SUBTOTAL THIS SECTION					1451 LB								
HEADWALL - EPOXY COATED													
AHE1322	13	STR	18-7	6									HORIZ EF (MC)
AHE1324	13	STR	22-11	6									HORIZ EF
SUBTOTAL THIS SECTION					166 LB								

BAR BENDING DIAGRAMS

ALL DIMENSIONS ARE OUT TO OUT OF BARS.

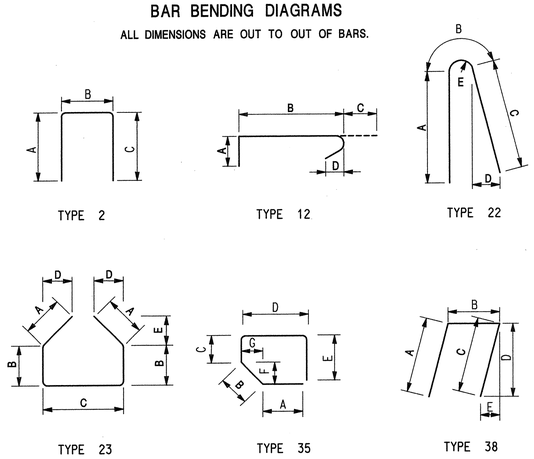

LEGEND:

F.F. - FRONT FACE
E.F. - EACH FACE
R.F. - REAR FACE
VERT - VERTICAL
HORIZ - HORIZONTAL
TRANS - TRANSVERSE
LONG - LONGITUDINAL
PPT - PARAPET

NOTE:

(MC) - MECHANICAL CONNECTOR REQUIRED AT STAGE LINE CONSTRUCTION JOINTS. ADJUST BAR DIMENSIONS TO SUIT CONNECTOR TYPE.

CONTROL SECTION		JOB NO.	
DES. BY	R. PAREJA	CHK. BY	T. STRNAD
DWN. BY	M. NAFIS		
IN CHARGE OF A. SESHADRI			

REVISION	BY	C'K'D	DATE

BRIDGE NO. 2

NEW JERSEY DEPARTMENT OF TRANSPORTATION
BUREAU OF STRUCTURAL ENGINEERING

BAR LIST II

ROUTE 80 BRIDGES OVER ROUTE 287
NORTHBOUND AND SMITH ROAD
CONTRACT NO. 043003714

DEWBERRY-GOODKIND, INC. COA# 24GA28047600

BRIAN D. JECKER, P.E. DATE 8-24-10

NEW JERSEY PROFESSIONAL ENGINEER LICENSE NO. 24GE04088600

BRIDGE SHEET NO. B-52 OF B-58

123
129

Dewberry-Goodkind, Inc.
Bloomfield, N.J.

STATE	FEDERAL PROJECT NO.	SHEET	TOTAL SHEETS
N.J.	BR-080-5(094)		

STRUCTURE NO. 1414-169

STRUCTURE NAME ROUTE I-80 OVER SMITH ROAD

WINGWALL

MARK	SIZE	TYPE	LENGTH	QTY	A	B	C	D	E	F	G	H	REMARKS
NORTHWEST WINGWALL - STAGE 3 WESTBOUND													
STEM - EPOXY COATED													
WE1301	13	STR	3-3	5									HORIZ RF CORNER
WE1601	16	STR	4-9	10									VERT DOWEL EF
WE1602	16	STR	4-3	4									HORIZ DOWEL EF
WE1603	16	STR	3-8	4									HORIZ EF
WE1605	16	2	6-1	5	2-7	0-11	2-7						VERT U-BARS
WE1607	16	36	5-4	6	2-3	1-1	2-0	1-11.5	0-4.7				HORIZ FF CORNER
WE1608	16	2	4-8	66	3-10	0-10	---						VERT DOWEL EF
WE1609	16	STR	35-8	6									HORIZ EF
WE1613	16	34	7-8	51	2-5.5	0-7.5	0-9.2	2-0	0-11	0-5.5	0-3.7		VERT PARAPET
WE1614	16	37	7-11	5	2-5.5	0-4	0-6	0-4	2-5.5	0-11	0-5.5	0-3.7	VERT PARAPET
SUBTOTAL THIS SECTION					1153 LB								
PARAPET - EPOXY COATED													
WPE1601	16	31	7-11	36	2-11	0-4	0-2.5	0-4.2	2-11	0-7	0-5	0-3.5	VERT PARAPET
WPE1602	16	33	7-11	8	2-11	0-4	0-2.5	0-4	2-11	0-7			VERT PARAPET
WPE1603	16	33	8-2	7	2-11	0-4	0-3.5	0-4	2-11	0-8			VERT PARAPET
WPE1606	16	33	6-10	5	2-3	0-4	0-3.5	0-4	2-3	0-8			1 SET OF 5
			TO		TO	TO	TO	TO	TO	TO			
			8-2		2-11	0-4	0-3.5	0-4	2-11	0-8			VERT PARAPET
WPE2202	22	STR	11-3	8									HORIZ EF
WPE2205	22	STR	12-6	2									HORIZ EF
WPE2207	22	STR	11-5	2									HORIZ EF
WPE2208	22	STR	2-11	2									HORIZ EF
WPE2502	25	STR	11-3	8									HORIZ EF
WPE2505	25	STR	12-6	4									HORIZ EF
SUBTOTAL THIS SECTION					1131 LB								
NORTHEAST WINGWALL - STAGE 3 WESTBOUND													
STEM - EPOXY COATED													
WE1301	13	STR	3-3	5									HORIZ RF CORNER
WE1601	16	STR	4-9	10									VERT DOWEL EF
WE1602	16	STR	4-3	4									HORIZ DOWEL EF
WE1603	16	STR	3-8	4									HORIZ EF
WE1605	16	2	6-1	5	2-7	0-11	2-7						VERT U-BARS
WE1606	16	10	5-4	6	2-3	1-1	2-0	1-11.5	0-4.7				HORIZ FF CORNER
WE1608	16	2	4-8	60	3-10	0-10	---						VERT DOWEL EF
WE1610	16	STR	32-8	6									HORIZ EF
WE1613	16	34	7-8	56	2-5.5	0-7.5	0-9.2	2-0	0-11	0-5.5	0-3.7		VERT PARAPET
SUBTOTAL THIS SECTION					1103 LB								
PARAPET - EPOXY COATED													
WPE1601	16	31	7-11	30	2-11	0-4	0-2.5	0-4.2	2-11	0-7	0-5	0-3.5	VERT PARAPET
WPE1602	16	33	7-11	17	2-11	0-4	0-2.5	0-4	2-11	0-7			VERT PARAPET
WPE1604	16	33	7-4	6	2-6	0-4	0-3.5	0-4	2-6	0-8			1 SET OF 6
			TO		TO	TO	TO	TO	TO	TO			
			8-0		2-10	0-4	0-3.5	0-4	2-10	0-8			VERT PARAPET
WPE1605	16	33	5-10	3	2-3	0-4	---	0-4	2-3	0-4			1 SET OF 3
			TO		TO	TO	TO	TO	TO	TO			
			7-2		2-5	0-4	0-3.5	0-4	2-5	0-8			VERT PARAPET
WPE2201	22	STR	9-9	8									HORIZ EF
WPE2205	22	STR	12-6	1									HORIZ RF
WPE2206	22	7	12-6	1	---	11-7.7	0-10.7	0-10.2	0-3.2				HORIZ FF
WPE2207	22	STR	11-5	2									HORIZ EF
WPE2208	22	STR	2-11	2									HORIZ EF
WPE2501	25	STR	9-9	8									HORIZ EF
WPE2505	25	STR	12-6	2									HORIZ RF
WPE2506	25	7	12-6	2	---	11-7.7	0-10.7	0-10.2	0-3.2				HORIZ FF
SUBTOTAL THIS SECTION					1068 LB								
SOUTHWEST WINGWALL - STAGE 4 EASTBOUND													
STEM - EPOXY COATED													
WE1301	13	STR	3-3	5									HORIZ RF CORNER
WE1601	16	STR	4-9	10									VERT DOWEL EF
WE1602	16	STR	4-3	4									HORIZ DOWEL EF
WE1603	16	STR	3-8	4									HORIZ EF
WE1605	16	2	6-1	5	2-7	0-11	2-7						VERT U-BARS
WE1606	16	10	5-4	6	2-3	1-1	2-0	1-11.5	0-4.7				HORIZ FF CORNER
WE1608	16	2	4-8	64	3-10	0-10	---						VERT DOWEL EF
WE1612	16	STR	34-8	6									HORIZ EF
WE1613	16	34	7-8	60	2-5.5	0-7.5	0-9.2	2-0	0-11	0-5.5	0-3.7		VERT PARAPET
SUBTOTAL THIS SECTION					1167 LB								
PARAPET - EPOXY COATED													
WPE1601	16	31	7-11	34	2-11	0-4	0-2.5	0-4.2	2-11	0-7	0-5	0-3.5	VERT PARAPET
WPE1602	16	33	7-11	17	2-11	0-4	0-2.5	0-4	2-11	0-7			VERT PARAPET
WPE1604	16	33	7-4	6	2-6	0-4	0-3.5	0-4	2-6	0-8			1 SET OF 6
			TO		TO	TO	TO	TO	TO	TO			
			8-0		2-10	0-4	0-3.5	0-4	2-10	0-8			VERT PARAPET
WPE1605	16	33	5-10	3	2-3	0-4	---	0-4	2-3	0-4			1 SET OF 3
			TO		TO	TO	TO	TO	TO	TO			
			7-2		2-5	0-4	0-3.5	0-4	2-5	0-8			VERT PARAPET

NOTE:
(MC) - MECHANICAL CONNECTOR REQUIRED AT STAGE LINE CONSTRUCTION JOINTS. ADJUST BAR DIMENSIONS TO SUIT CONNECTOR TYPE.

WINGWALL

MARK	SIZE	TYPE	LENGTH	QTY	A	B	C	D	E	F	G	H	REMARKS
WPE2203	22	STR	10-9	8									HORIZ EF
WPE2205	22	STR	12-6	1									HORIZ RF
WPE2206	22	7	12-6	1	---	11-7.7	0-10.7	0-10.2	0-3.2				HORIZ FF
WPE2207	22	STR	11-5	2									HORIZ EF
WPE2208	22	STR	2-11	2									HORIZ EF
WPE2503	25	STR	10-9	8									HORIZ EF
WPE2505	25	STR	12-6	2									HORIZ RF
WPE2506	25	7	12-6	2	---	11-7.7	0-10.7	0-10.2	0-3.2				HORIZ FF
SUBTOTAL THIS SECTION					1139 LB								
SOUTHEAST WINGWALL - STAGE 4 EASTBOUND													
STEM - EPOXY COATED													
WE1301	13	STR	3-3	5									HORIZ RF CORNER
WE1601	16	STR	4-9	10									VERT DOWEL EF
WE1602	16	STR	4-3	4									HORIZ DOWEL EF
WE1603	16	STR	3-8	4									HORIZ EF
WE1605	16	2	6-1	5	2-7	0-11	2-7						VERT U-BARS
WE1607	16	36	5-4	6	2-3	1-1	2-0	1-11.5	0-4.7				HORIZ FF CORNER
WE1608	16	2	4-8	58	3-10	0-10	---						VERT DOWEL EF
WE1611	16	STR	32-5	6									HORIZ EF
WE1613	16	34	7-8	45	2-5.5	0-7.5	0-9.2	2-0	0-11	0-5.5	0-3.7		VERT PARAPET
WE1614	16	37	7-11	5	2-5.5	0-4	0-6	0-4	2-5.5	0-11	0-5.5	0-3.7	VERT PARAPET
SUBTOTAL THIS SECTION					1045 LB								
PARAPET - EPOXY COATED													
WPE1601	16	31	7-11	30	2-11	0-4	0-2.5	0-4.2	2-11	0-7	0-5	0-3.5	VERT PARAPET
WPE1602	16	33	7-11	8	2-11	0-4	0-2.5	0-4	2-11	0-7			VERT PARAPET
WPE1603	16	33	8-2	7	2-11	0-4	0-3.5	0-4	2-11	0-8			VERT PARAPET
WPE1606	16	33	6-10	5	2-3	0-4	0-3.5	0-4	2-3	0-8			1 SET OF 5
			TO		TO	TO	TO	TO	TO	TO			
			8-2		2-11	0-4	0-3.5	0-4	2-11	0-8			VERT PARAPET
WPE2204	22	STR	9-7	8									HORIZ EF
WPE2205	22	STR	12-6	2									HORIZ EF
WPE2207	22	STR	11-5	2									HORIZ EF
WPE2208	22	STR	2-11	2									HORIZ EF
WPE2504	25	STR	9-7	8									HORIZ EF
WPE2505	25	STR	12-6	4									HORIZ EF
SUBTOTAL THIS SECTION					1018 LB								

DECK

MARK	SIZE	TYPE	LENGTH	QTY	A	B	C	D	E	F	G	H	REMARKS
STAGE 1													
DECK SLAB - EPOXY COATED													
SE1301	13	STR	30-0	16									LONG HAUNCH
SE1302	13	STR	28-3	8									LONG HAUNCH
SE1303	13	23	6-0	84	1-3.2	0-10.2	1-9	0-8.7	1-0.5				VERT MEDIAN
SE1601	16	1	29-10	124	29-3	0-7	0-5	0-5					TRANS TOP
SE1602	16	1	22-6	140	21-11	0-7	0-5	0-5					TRANS TOP
SE1603	16	STR	18-3	144									TRANS BOT
SE1604	16	STR	32-11	124									TRANS BOT
SE1605	16	STR	4-7	16									2 SETS OF 8
			TO										
			25-0										TRANS TOP
SE1606	16	STR	4-7	20									2 SETS OF 10
			TO										
			28-8										TRANS BOT
SE1607	16	STR	18-3	120									LONG T & B
SE1608	16	STR	35-0	232									LONG T & B
SE1634	16	1	2-7	16	2-0	0-7	0-5	0-5					2 SETS OF 8
			TO		TO	TO	TO	TO					
			22-6		21-11	0-7	0-5	0-5					TRANS TOP
SE1635	16	STR	2-0	12									2 SETS OF 6
			TO										
			18-3										TRANS BOT
SE1636	16	13	4-11	324	0-8.5	1-6	1-0	1-0					TRANS HAUNCH
SE1665	16	2	6-2	96	1-9	1-1.5	3-3						LONG DECK END
SE1666	16	STR	33-3	4									TRANS DECK END
SE1667	16	2	4-0	96	1-1.5	1-9	1-1.5						U-BAR DECK END
SE1678	16	STR	5-4	48									TRANS DECK END
SUBTOTAL THIS SECTION					29719 LB								
MEDIAN BARRIER - EPOXY COATED													
SPE1301	13	22	5-1	84	2-4.2	0-4.5	2-4.2	0-6	0-1.5				MEDIAN VERT
SPE1302	13	STR	13-4	30									MEDIAN HORIZ
SUBTOTAL THIS SECTION					552 LB								
EASTBOUND ROADWAY - STAGE 2													
DECK SLAB - EPOXY COATED													
SE1301	13	STR	30-0	8									LONG HAUNCH
SE1302	13	STR	28-3	4									LONG HAUNCH
SE1607	16	STR	18-3	23									LONG T & B
SE1608	16	STR	35-0	46									LONG T & B
SE1609	16	1	10-1	138	9-6	0-7	0-5	0-5					TRANS TOP (MC)
SE1610	16	STR	9-6	138									TRANS BOT (MC)
SE1611	16	STR	2-0	3									1 SET OF 3
			TO										
			7-0										TRANS BOT

BAR BENDING DIAGRAMS

ALL DIMENSIONS ARE OUT TO OUT OF BARS.

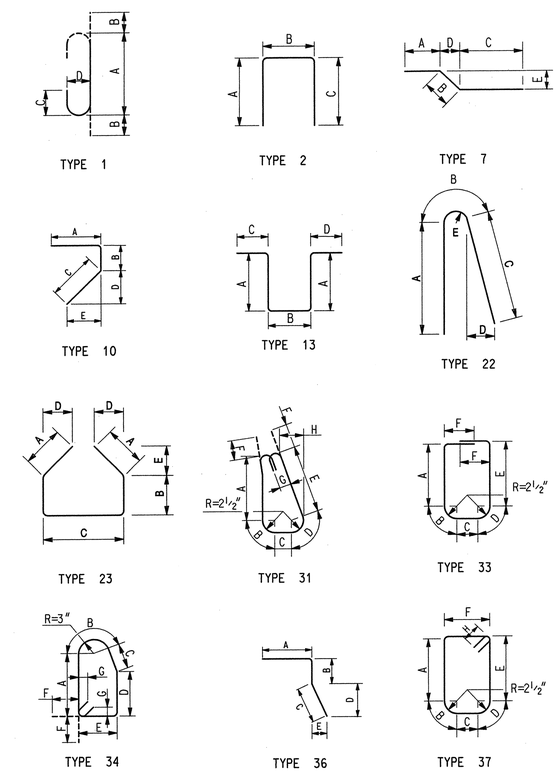

LEGEND:

F.F.	- FRONT FACE
E.F.	- EACH FACE
R.F.	- REAR FACE
VERT	- VERTICAL
HORIZ	- HORIZONTAL
TRANS	- TRANSVERSE
LONG	- LONGITUDINAL
PPT	- PARAPET

BRIDGE NO. 2

NEW JERSEY DEPARTMENT OF TRANSPORTATION
BUREAU OF STRUCTURAL ENGINEERING

BAR LIST III

ROUTE 80 BRIDGES OVER ROUTE 287
NORTHBOUND AND SMITH ROAD
CONTRACT NO. 043003714

DEWBERRY-GOODKIND, INC. COA# 24GA28047600

BRIAN D. JECKER, P.E. 8-24-10 DATE

NEW JERSEY PROFESSIONAL ENGINEER LICENSE. NO. 24GE04088600

BRIDGE SHEET NO. B-53 OF B-58

124/129

REVISION	BY	C'K'D	DATE

CONTROL SECTION		JOB NO.	
DES. BY	R. PAREJA	CHK. BY	T. STRNAD
DWN. BY	M. NAFIS		

IN CHARGE OF A. SESHADRI

Dewberry-Goodkind, Inc.
Bloomfield, N.J.

STATE	FEDERAL PROJECT NO.	SHEET	TOTAL SHEETS
N.J.	BR-080-5(094)		

STRUCTURE NO. 1414-169

STRUCTURE NAME ROUTE I-80 OVER SMITH ROAD

DECK

MARK	SIZE	TYPE	LENGTH	QTY	A	B	C	D	E	F	G	H	REMARKS
SE1612	16	1	2-7 TO 7-7	3	2-0 TO 7-0	0-7 TO 0-7	0-5 TO 0-5	0-5 TO 0-5					1 SET OF 3 TRANS TOP
SE1636	16	13	4-11	81	0-8.5	1-6	1-0	1-0					TRANS HAUNCH
SE1637	16	13	3-1	81	0-8.5	0-8	1-0	---					TRANS HAUNCH
SE1665	16	2	6-2	16	1-9	1-1.5	3-3						LONG DECK END
SE1667	16	2	4-0	16	1-1.5	1-9	1-1.5						U-BAR DECK END
SE1668	16	STR	9-6	4									TRANS END (MC)
SE1669	16	STR	5-8	8									TRANS DECK END
SE1679	16	STR	2-0 TO 7-0	6									2 SETS OF 3 TRANS T&B (MC)
SUBTOTAL THIS SECTION				6163 LB									
EASTBOUND ROADWAY - STAGE 3 - DECK SLAB - EPOXY COATED													
SE1301	13	STR	30-0	12									LONG HAUNCH
SE1302	13	STR	28-3	6									LONG HAUNCH
SE1607	16	STR	18-3	37									LONG T & B
SE1608	16	STR	35-0	74									LONG T & B
SE1613	16	STR	5-6	135									TRANS TOP (MC)
SE1614	16	STR	13-2	135									TRANS TOP (MC)
SE1615	16	STR	2-0 TO 12-8	20									2 SETS OF 10 TRANS T&B (MC)
SE1617	16	STR	9-4	270									TRANS BOT (MC)
SE1636	16	13	4-11	81	0-8.5	1-6	1-0	1-0					TRANS HAUNCH
SE1637	16	13	3-1	162	0-8.5	0-8	1-0	---					TRANS HAUNCH
SE1665	16	2	6-2	32	1-9	1-1.5	3-3						LONG DECK END
SE1667	16	2	4-0	32	1-1.5	1-9	1-1.5						U-BAR DECK END
SE1668	16	STR	9-6	8									TRANS END (MC)
SE1669	16	STR	5-8	16									TRANS DECK END
SUBTOTAL THIS SECTION				10619 LB									
EASTBOUND ROADWAY - STAGE 4 - DECK SLAB - EPOXY COATED													
SE1301	13	STR	30-0	8									LONG HAUNCH
SE1302	13	STR	28-3	4									LONG HAUNCH
SE1607	16	STR	18-3	61									LONG T & B
SE1608	16	STR	35-0	122									LONG T & B
SE1616	16	STR	2-0 TO 5-6	3									1 SET OF 3 TRANS TOP (MC)
SE1617	16	STR	9-4	71									TRANS BOT (MC)
SE1618	16	STR	20-10	131									TRANS TOP (MC)
SE1619	16	1	8-7	273	8-0	0-7	0-5	0-5					TRANS TOP
SE1621	16	STR	19-7	66									TRANS BOT
SE1622	16	STR	11-11	68									TRANS BOT
SE1623	16	STR	17-0	65									TRANS BOT (MC)
SE1624	16	STR	4-6 TO 19-5	6									1 SET OF 6 TRANS TOP
SE1625	16	STR	5-6	6									TRANS TOP (MC)
SE1626	16	STR	6-1 TO 16-6	5									1 SET OF 5 TRANS BOT
SE1627	16	STR	2-0 TO 9-4	4									1 SET OF 4 TRANS BOT (MC)
SE1629	16	STR	6-3 TO 18-6	6									1 SET OF 6 TRANS TOP
SE1630	16	1	2-7 TO 8-7	5	2-0 TO 8-0	0-7 TO 0-7	0-5 TO 0-5	0-5 TO 0-5					1 SET OF 5 TRANS TOP
SE1632	16	STR	6-0 TO 14-8	3									1 SET OF 3 TRANS BOT
SE1633	16	STR	2-0 TO 11-11	5									1 SET OF 5 TRANS BOT
SE1636	16	13	4-11	81	0-8.5	1-6	1-0	1-0					TRANS HAUNCH
SE1637	16	13	3-1	81	0-8.5	0-8	1-0	---					TRANS HAUNCH
SE1665	16	2	6-2	48	1-9	1-1.5	3-3						LONG DECK END
SE1667	16	2	4-0	48	1-1.5	1-9	1-1.5						U-BAR DECK END
SE1668	16	STR	9-6	4									TRANS DECK END
SE1669	16	STR	5-8	24									TRANS DECK END
SE1671	16	STR	19-4	4									TRANS DECK END
SE1675	16	STR	4-0	48									LONG PPT JT
SE1676	16	2	6-5	24	2-11	0-6.5	2-11						TRANS PPT JT
SE1677	16	32	4-10	126	0-3	0-4.7	0-11.2	0-8	1-3.7	0-3.2	1-0	1-0.6	VERT PPT
SUBTOTAL THIS SECTION				18000 LB									
PARAPET - EPOXY COATED													
SPE1601	16	31	7-11	126	2-11	0-4	0-2.5	0-4.2	2-11	0-7	0-5	0-3.5	VERT PPT
SPE2201	22	STR	8-9	36									HORIZ PPT
SPE2501	25	STR	8-9	36									HORIZ PPT
SUBTOTAL THIS SECTION				2526 LB									
WESTBOUND ROADWAY - STAGE 2 - DECK SLAB - EPOXY COATED													
SE1301	13	STR	30-0	12									LONG HAUNCH
SE1302	13	STR	28-3	6									LONG HAUNCH
SE1607	16	STR	18-3	42									LONG T & B
SE1608	16	STR	35-0	84									LONG T & B
SE1636	16	13	4-11	162	0-8.5	1-6	1-0	1-0					TRANS HAUNCH
SE1637	16	13	3-1	81	0-8.5	0-8	1-0	---					TRANS HAUNCH
SE1638	16	1	18-0	67	17-5	0-7	0-5	0-5					TRANS TOP (MC)
SE1639	16	1	18-3	67	17-8	0-7	0-5	0-5					TRANS TOP (MC)

DECK

MARK	SIZE	TYPE	LENGTH	QTY	A	B	C	D	E	F	G	H	REMARKS
SE1640	16	STR	17-5	67									TRANS BOT (MC)
SE1641	16	STR	17-8	67									TRANS BOT (MC)
SE1642	16	1	2-7 TO 16-0	6	2-0 TO 15-5	0-7 TO 0-7	0-5 TO 0-5	0-5 TO 0-5					1 SET OF 6 TRANS TOP EAST
SE1643	16	STR	2-0 TO 15-5	6									1 SET OF 6 TRANS BOT EAST
SE1644	16	STR	2-0 TO 15-1	12									2 SETS OF 6 TRANS T&B (MC)
SE1665	16	2	6-2	34	1-9	1-1.5	3-3						LONG DECK END
SE1667	16	2	4-0	34	1-1.5	1-9	1-1.5						U-BAR DECK END
SE1669	16	STR	5-8	8									TRANS DECK END
SE1672	16	STR	17-7	2									TRANS END (MC)
SE1673	16	STR	18-2	2									TRANS END (MC)
SE1674	16	STR	6-1	8									TRANS DECK END
SUBTOTAL THIS SECTION				11049 LB									
WESTBOUND ROADWAY - STAGE 3 - DECK SLAB - EPOXY COATED													
SE1301	13	STR	30-0	16									LONG HAUNCH
SE1302	13	STR	28-3	8									LONG HAUNCH
SE1607	16	STR	18-3	100									LONG T & B
SE1608	16	STR	35-0	200									LONG T & B
SE1636	16	13	4-11	243	0-8.5	1-6	1-0	1-0					TRANS HAUNCH
SE1637	16	13	3-1	81	0-8.5	0-8	1-0	---					TRANS HAUNCH
SE1645	16	STR	12-8	10									TRANS BOT
SE1650	16	1	9-2	275	8-7	0-7	0-5	0-5					TRANS TOP
SE1651	16	STR	37-10	126									TRANS TOP (MC)
SE1652	16	STR	28-9	63									TRANS BOT
SE1653	16	STR	17-9	63									TRANS BOT (MC)
SE1654	16	STR	25-9	68									TRANS BOT (MC)
SE1655	16	STR	20-8	63									TRANS BOT
SE1656	16	1	2-7 TO 9-2	6	2-0 TO 8-7	0-7 TO 0-7	0-5 TO 0-5	0-5 TO 0-5					1 SET OF 6 TRANS TOP WEST
SE1657	16	STR	5-0 TO 35-7	12									1 SET OF 12 TRANS TOP WEST
SE1658	16	STR	21-9	6									TRANS TOP (MC)
SE1659	16	STR	2-0 TO 21-9	8									1 SET OF 8 TRANS TOP (MC)
SE1660	16	STR	6-3 TO 21-9	6									1 SET OF 6 TRANS TOP EAST
SE1661	16	STR	2-0 TO 12-8	5									1 SET OF 5 TRANS BOT WEST
SE1662	16	STR	6-4 TO 31-6	10									1 SET OF 10 TRANS BOT WEST
SE1663	16	STR	2-0 TO 25-9	9									1 SET OF 9 TRANS BOT (MC)
SE1664	16	STR	6-3 TO 17-9	5									1 SET OF 5 TRANS BOT EAST
SE1665	16	2	6-2	85	1-9	1-1.5	3-3						LONG DECK END
SE1667	16	2	4-0	85	1-1.5	1-9	1-1.5						U-BAR DECK END
SE1669	16	STR	5-8	20									TRANS DECK END
SE1673	16	STR	18-2	4									TRANS END (MC)
SE1674	16	STR	6-1	20									TRANS DECK END
SE1675	16	STR	4-0	48									LONG PPT JT
SE1676	16	2	6-5	24	2-11	0-6.5	2-11						TRANS PPT JT
SE1677	16	32	4-10	126	0-3	0-4.7	0-11.2	0-8	1-3.7	0-3.2	1-0	1-0.6	VERT PPT
SE1680	16	STR	28-7	4									TRANS DECK END
SUBTOTAL THIS SECTION				28536 LB									
PARAPET - EPOXY COATED													
SPE1601	16	31	7-11	126	2-11	0-4	0-2.5	0-4.2	2-11	0-7	0-5	0-3.5	VERT PPT
SPE2201	22	STR	8-9	36									HORIZ PPT
SPE2501	25	STR	8-9	36									HORIZ PPT
SUBTOTAL THIS SECTION				2526 LB									

BAR BENDING DIAGRAMS

ALL DIMENSIONS ARE OUT TO OUT OF BARS.

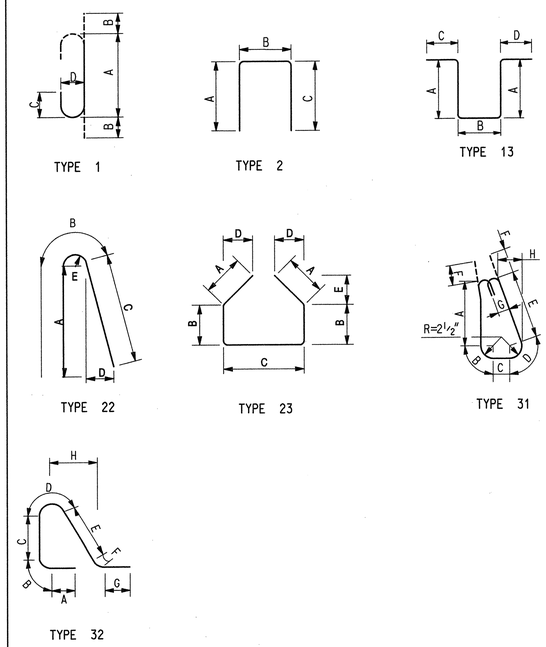

LEGEND:

F.F. - FRONT FACE
E.F. - EACH FACE
R.F. - REAR FACE
VERT - VERTICAL
HORIZ - HORIZONTAL
TRANS - TRANSVERSE
LONG - LONGITUDINAL
PPT - PARAPET

NOTE:

(MC) - MECHANICAL CONNECTOR REQUIRED AT STAGE LINE CONSTRUCTION JOINTS. ADJUST BAR DIMENSIONS TO SUIT CONNECTOR TYPE.

BRIDGE NO. 2

NEW JERSEY DEPARTMENT OF TRANSPORTATION
BUREAU OF STRUCTURAL ENGINEERING

BAR LIST IV

ROUTE 80 BRIDGES OVER ROUTE 287 NORTHBOUND AND SMITH ROAD
CONTRACT NO. 043003714

DEWBERRY-GOODKIND, INC. COA# 24GA28047600

BRIAN D. JECKER, P.E. DATE 8-24-10

NEW JERSEY PROFESSIONAL ENGINEER LICENSE. NO. 24GE04088600

BRIDGE SHEET NO. B-54 OF B-58

125
129

REVISION	BY	C'K'D	DATE

CONTROL SECTION		JOB NO.	
DES. BY	R. PAREJA	CHK. BY	T. STRNAD
DWN. BY	M. NAFIS		

IN CHARGE OF A. SESHADRI

Dewberry-Goodkind, Inc.
Bloomfield, N.J.

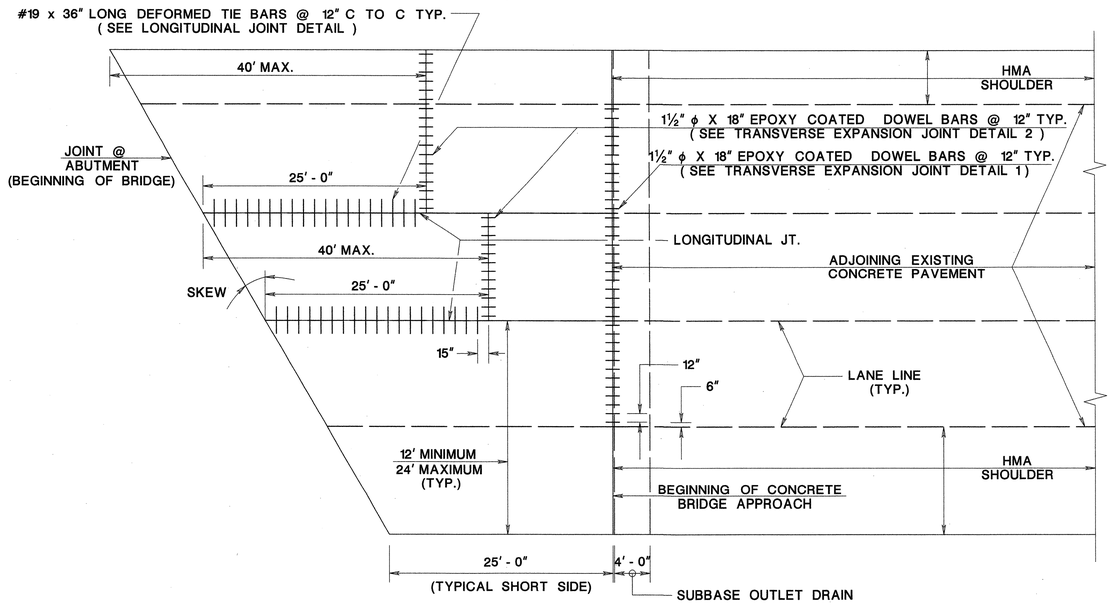

CONCRETE BRIDGE APPROACH ADJOINING CONCRETE PAVEMENT

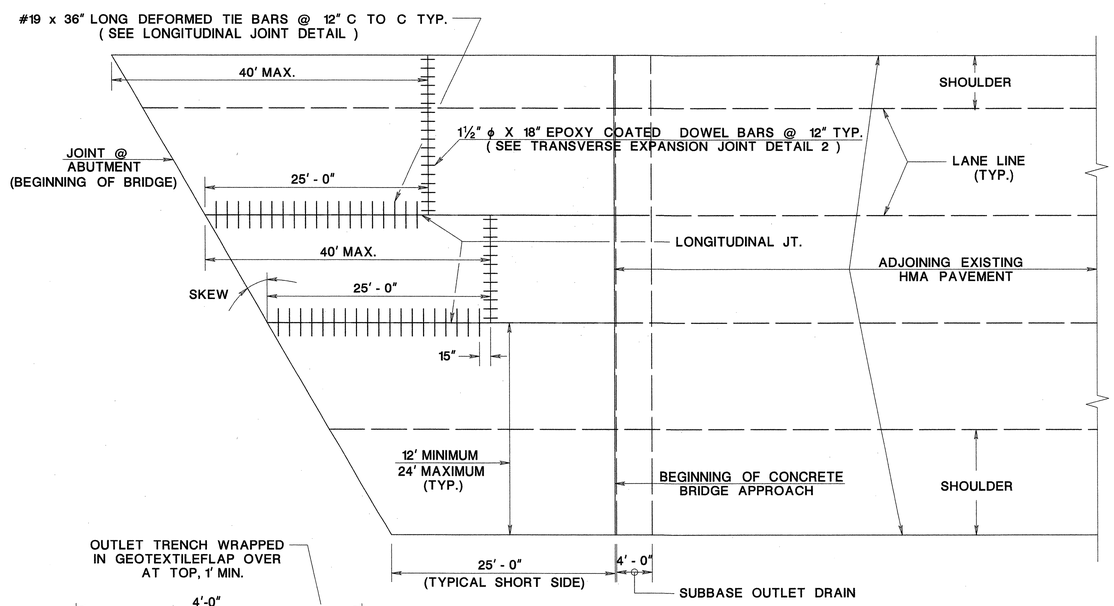

CONCRETE BRIDGE APPROACH ADJOINING HMA PAVEMENT

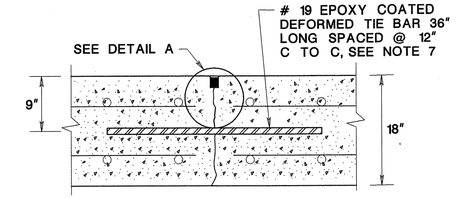

LONGITUDINAL JOINT

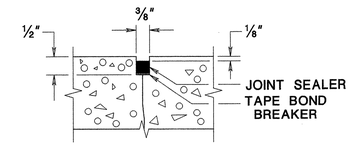

DETAIL A
HOT-POURED JOINT SEALER

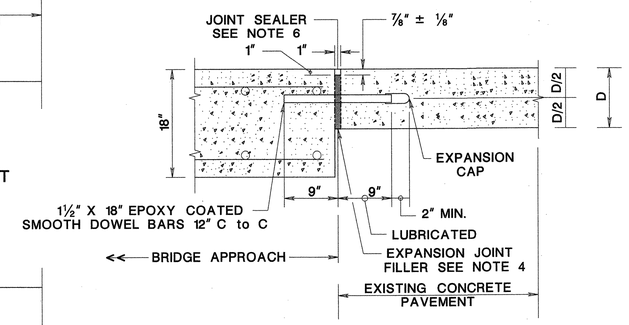

TRANSVERSE EXPANSION JOINT DETAIL 1

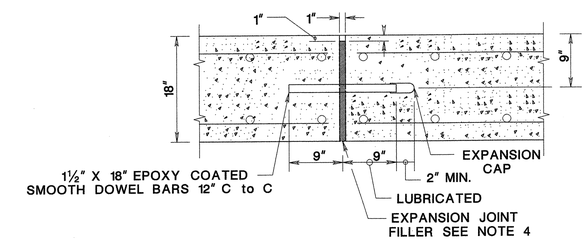

TRANSVERSE EXPANSION JOINT DETAIL 2

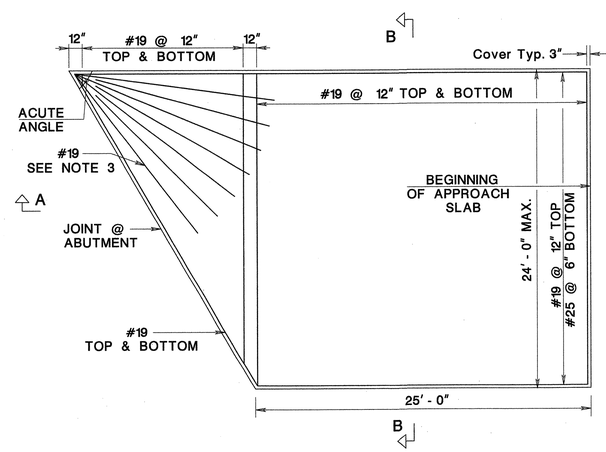

PLAN - CONCRETE BRIDGE APPROACH UNIT

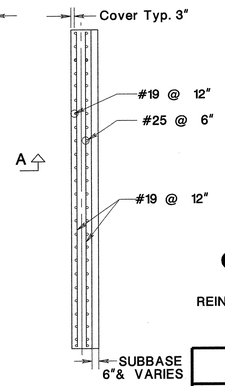

SECTION B - B

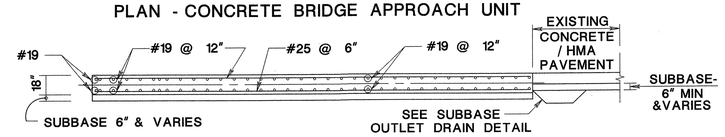

SECTION A - A

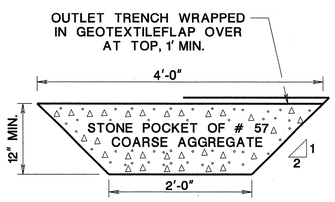

SUBBASE OUTLET DRAIN

NOTES:

1. CONSTRUCT LONGIDITUDINAL JOINTS IN THE CONCRETE BRIDGE APPROACH ALONG THE LANE AND SHOULDER LINES. THIS MAY REQUIRE USING COUPLERS FOR THE STAGE CONSTRUCTION. INCLUDE COST OF COUPLERS IN THE ITEM, " CONCRETE BRIDGE APPROACH ".
2. ALL REINFORCEMENT STEEL TO BE CORROSION PROTECTED.
3. FOR APPROACH SLAB CORNER WITH AN ACUTE ANGLE LESS THAN 65 DEGREE, PROVIDE 7 # 19 BARS, 15' LONG DIRECTLY UNDER THE TOP LAYER OF BARS IN A FANNED ARRANGEMENT.
4. CUT EXPANSION JOINT FILLER MATERIAL IN STRIPS EQUAL TO THE WIDTH OF APPROACH SLAB. MAKE THE TOP SURFACE SMOOTH AND HAVE HOLES PUNCHED FOR THE DOWEL BARS.
5. PLACE CLOSED-END EXPANSION CAP OVER THE LUBRICATED END OF ALL PLAIN DOWEL BARS AND PROVIDE 2" CLEARANCE POCKET ASSURED BY MEANS OF A POSITIVE SPACING DEVICE.
6. INSTALL TOP OF THE JOINT SEALING MATERIAL ¼" ± ⅛" BELOW THE SURFACE OF THE PAVEMENT.
7. PLACE DEFORMED BAR PERPENDICULAR TO AND CENTERED OVER THE LONGITUDINAL JOINT.
8. THE QUANTITY OF REINFORCEMENT STEEL, FOR THE CONCRETE BRIDGE APPROACH IS APPROXIMATELY 4.67 LBS / CU. FT. DEVELOP ORDER LENGTHS OF REINFORCEMENT BARS IN ACCORDANCE WITH DETAILS SHOWN HERE AND THE JOINT LAY OUT DETAILS SHOWN ON THE CONTRACT PLANS.
9. FOR LAYOUT OF LONGITUDINAL JOINTS AND TRANSVERSE JOINTS REFER TO CONTRACT PLANS.

CONCRETE BRIDGE APPROACH

N.T.S.

REINFORCEMENT STEEL IS DESIGNATED IN METRIC UNITS.

BCD-507-5

NEW JERSEY DEPARTMENT OF TRANSPORTATION
BUREAU OF STRUCTURAL ENGINEERING

BRIDGE CONSTRUCTION DETAILS

BCD-507-5.1

BRIDGE SHEET NO. 55 OF 58

126
129

BDC10D-01-BCD-507-5.1
BDC09D-01-BCD-507-5.1
BDC07D-01-ORIGINAL SHEET

ID= date= scale= pen table= file=

STATE	FEDERAL PROJECT NO.
N.J.	BR-080-5(094)

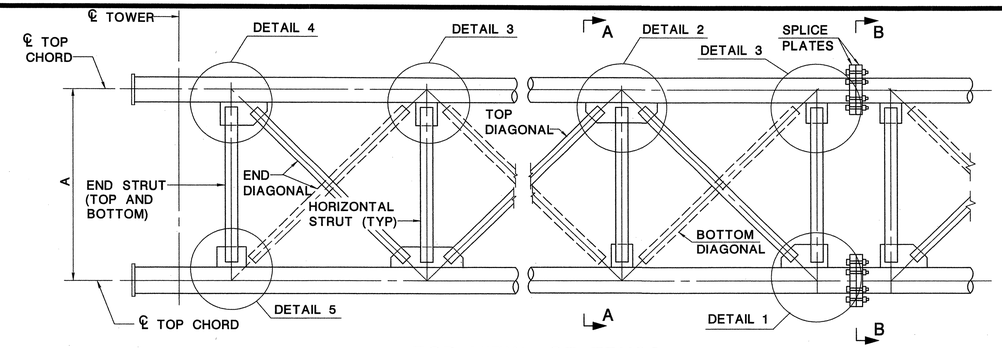

TOP VIEW OF TRUSS

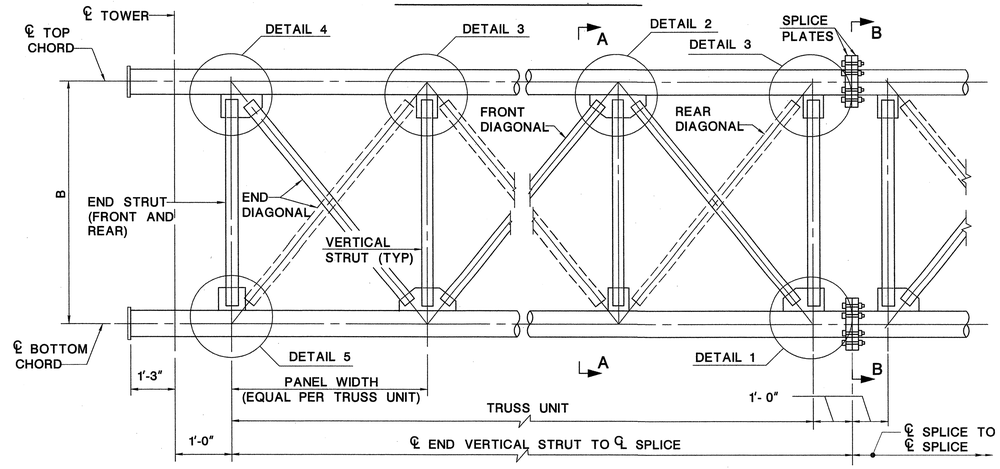

FRONT VIEW OF TRUSS

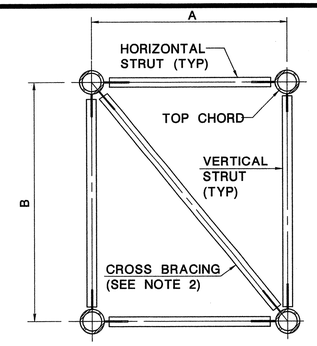

SECTION A-A

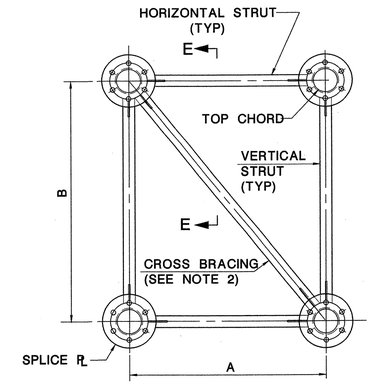

SECTION B-B

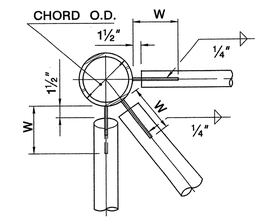

SECTION C-C

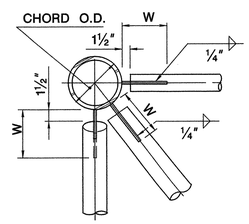

SECTION D-D

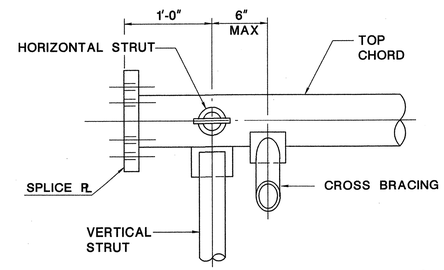

SECTION E-E

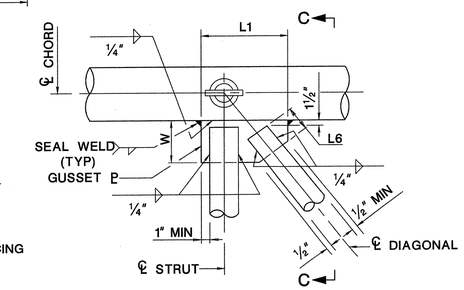

DETAIL 1 (SEE COPE HOLE DETAIL)

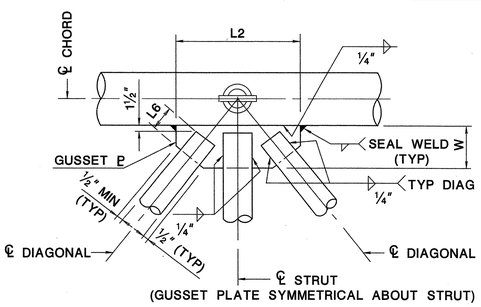

(GUSSET PLATE SYMMETRICAL ABOUT STRUT)

DETAIL 2

(SEE COPE HOLE DETAIL)

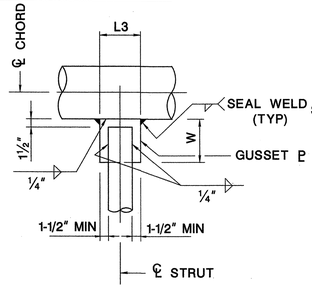

DETAIL 3

(SEE COPE HOLE DETAIL)

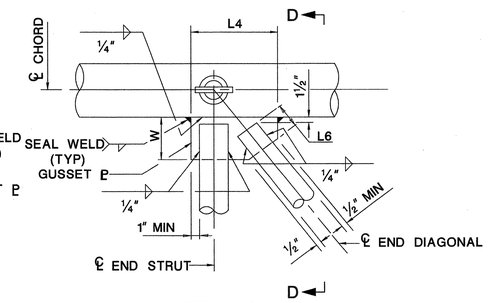

DETAIL 4

(END 'K' GUSSET)
(SEE COPE HOLE DETAIL)

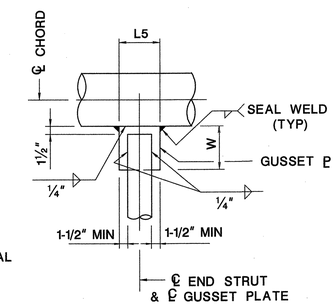

DETAIL 5

(END 'T' GUSSET)
(SEE COPE HOLE DETAIL)

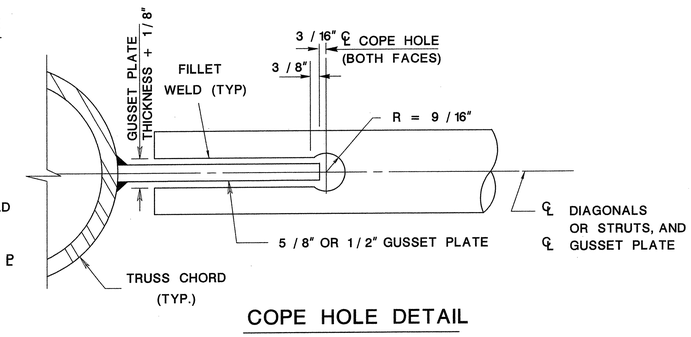

COPE HOLE DETAIL

NOTE:

COPE HOLES TO BE PROVIDED AT BOTH ENDS AND BOTH FACES OF ALL STRUTS AND DIAGONALS.

TRUSS GUSSET PLATE DIMENSIONS

CHORD O.D. (IN)	PLATE THICKNESS	PLATE WIDTH W	"K" GUSSET MIN. L1	"K-T" GUSSET MIN. L2	"T" GUSSET MIN. L3	"END - K" GUSSET MIN. L4	"END - T" GUSSET MIN. L5	WELD LENGTH MIN. L6
3.500	½"	6½"	10"	1'-2"	6½"	10"	6½"	3½"
4.000	½"	6½"	10"	1'-2"	6½"	10"	6½"	3½"
4.500	½"	6½"	10"	1'-2"	6½"	10"	6½"	3½"
5.563	½"	6½"	10"	1'-2"	6½"	10"	6½"	3½"
6.625	⅝"	7"	10⅜"	1'-3"	6½"	1' - 0"	6½"	4"
8.625	⅝"	7½"	11¼"	1'-5"	6½"	1' - 0½"	6½"	4¾"
10.750	⅝"	8"	1'-0¼"	1'-7"	6½"	1' - 4"	6½"	5"
12.750	⅝"	8½"	1'-1"	1'-8½"	6½"	1' - 4"	6½"	5½"
14.000	⅝"	8½"	1'-1½"	1'-9½"	6½"	1' - 4½"	6½"	5½"

NOTES:

1. THE SIZE OF CROSS BRACING MEMBERS SHALL BE THE SAME AS THAT OF THE DIAGONALS. CROSS BRACING SHALL BE LOCATED AT THE ENDS OF EACH TRUSS UNIT AND SPACED AT EVERY THIRD PANEL MAXIMUM, ALTERNATING IN DIRECTION.
2. FOR CHORD CAP DETAILS, SEE SIGN STRUCTURE DRG. OH-D8.
3. FOR CHORD SPLICES, SEE SIGN STRUCTURE DRG. OH-D6.
4. THE LENGTHS SHOWN IN THE TABLE FOR THE TRUSS GUSSET PLATE ARE ABSOLUTE MINIMUM DIMENSIONS. THE ACTUAL DIMENSIONS REQUIRED WILL DEPEND ON THE PANEL DEPTH AND WIDTH USED.

SIGN STRUCTURE DRG. OH-D5

NEW JERSEY DEPARTMENT OF TRANSPORTATION
BUREAU OF STRUCTURAL ENGINEERING

OVERHEAD SIGN SUPPORT STRUCTURES
STEEL TRUSS DETAILS - SHEET 1

ROUTE: SECTION

SCALE : NONE

BRIDGE SHEET NO. B-56 OF B-58

BDC075-02 - ORIGINAL SHEET

STATE	FEDERAL PROJECT NO.
N.J.	BR-080-5(094)

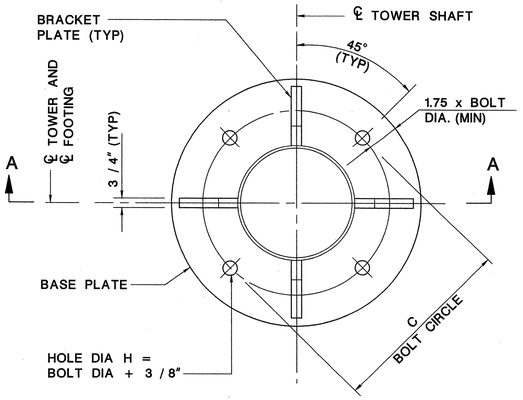

PLAN

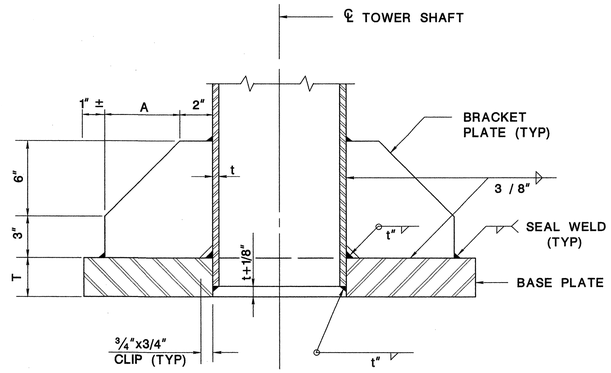

SECTION A-A

TOWER SHAFT BASE DETAIL

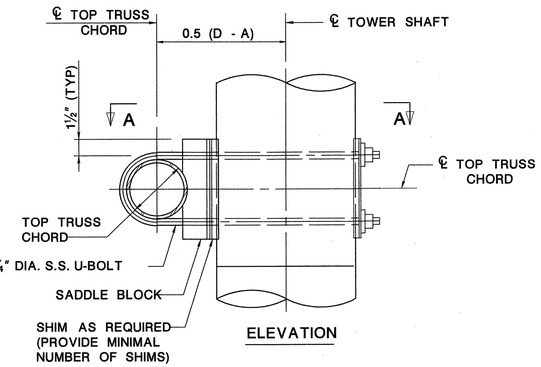

ELEVATION

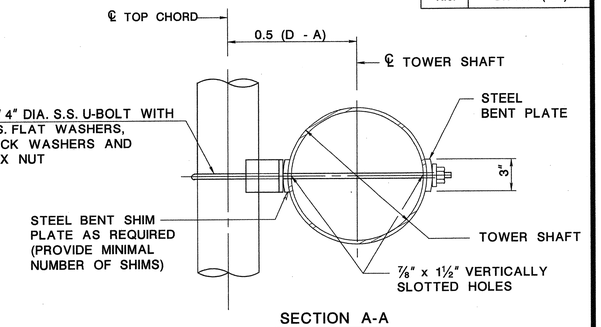

SECTION A-A

TOP CHORD MOUNTING ASSEMBLY DETAIL

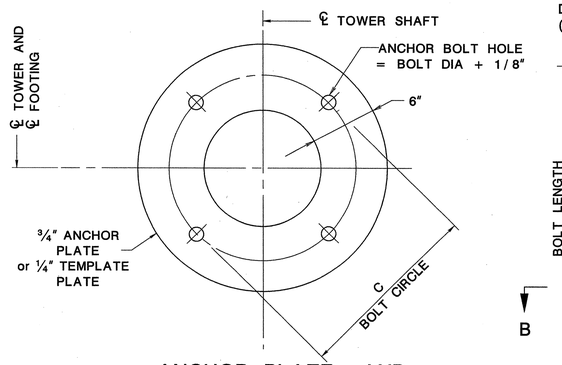

ANCHOR PLATE AND TEMPLATE PLATE DETAIL

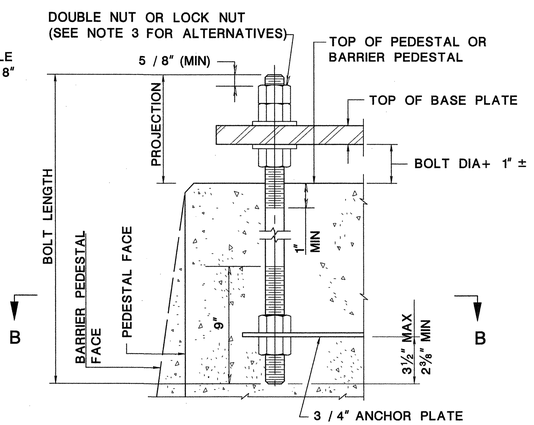

ANCHOR BOLT DETAIL

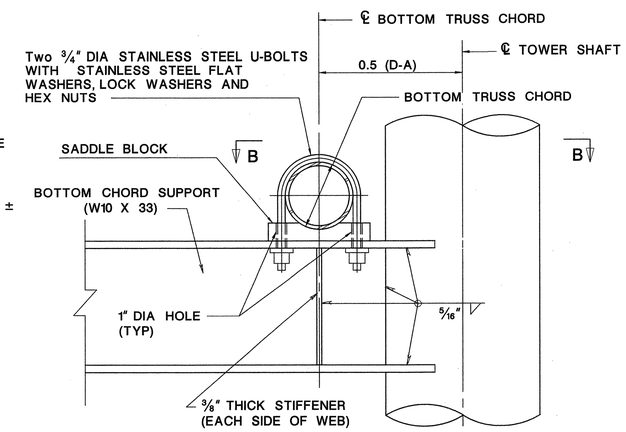

ELEVATION

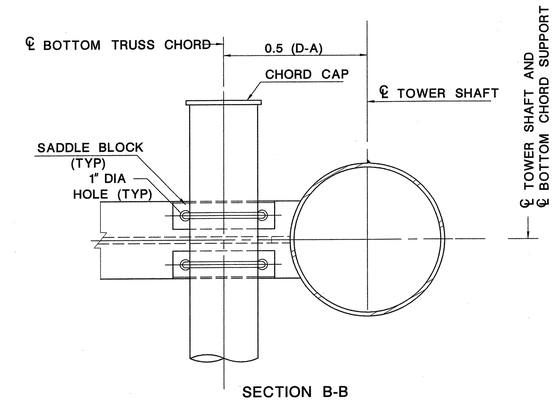

SECTION B-B

BOTTOM CHORD MOUNTING ASSEMBLY DETAIL

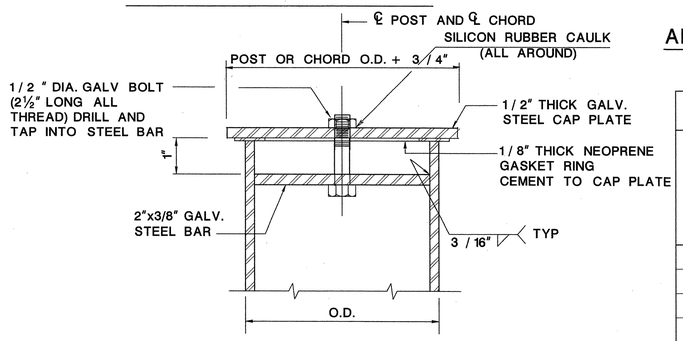

STEEL POST OR CHORD CAP DETAIL

NOTE: ALTERNATE CAP DETAILS MAY BE SUBMITTED TO THE RE FOR APPROVAL.

TOWER SHAFT BASE ASSEMBLY

TOWER SHAFT O.D.xTHICK (IN)	BASE PLATE	ANCHOR BOLTS				BRACKET PLATES
	THICKNESS T	BOLT CIRCLE C	SIZE DIAxLGTH	BOLT TENSION (KIPS)	PROJ*	A
10.750x.365	2"	1'-6¾"	2"X54"	87	10¾"	4½"
12.750x.375	2¼"	1'-8⅝"	2"X54"	87	10¾"	4½"
14.000x.375	2¼"	1'-9⅜"	2¾"X72"	172	13¼"	5½"
14.000x.500	2½"	1'-9⅜"	2¾"X72"	172	13¼"	5½"
16.000x.375	2½"	2'-1⅜"	2¾"X72"	172	13¼"	6½"
16.000x.500	2¾"	2'-1⅜"	2¾"X72"	172	13¼"	6½"
18.000x.375	2¾"	2'-4¾"	2¾"X72"	172	13¼"	7¼"
18.000x.500	2¾"	2'-4¾"	2¾"X72"	172	13¼"	7¼"
20.000x.500	3¼"	2'-8⅛"	3"X78"	208	14¾"	8½"
24.000x.500	3¼"	3'-2½"	3"X78"	208	14¾"	9½"

* PROJECTION LENGTH SHOWN IS BASED ON USING DOUBLE NUTS.

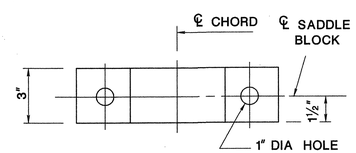

PLAN

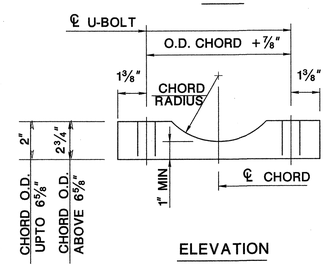

ELEVATION

SADDLE BLOCK DETAIL

NOTES:

1. ANCHOR BOLTS SHALL BE PROVIDED WITH HEAVY HEXAGON NUTS AND TWO WASHERS AS SHOWN ON THE ANCHOR BOLT DETAIL.
2. ANCHOR BOLTS SHALL BE GALVANIZED AFTER THREADING.
3. REFER TO THE NJDOT STANDARD SPECIFICATIONS FOR ANCHOR BOLT TIGHTENING PROCEDURES. WHEN CALIBRATED WRENCHES ARE USED FOR BOLT INSTALLATION, THEY SHALL BE SET TO PROVIDE THE TENSION THAT IS SPECIFIED IN THE TABLE PROVIDED HEREIN.
4. 3 / 4" STAINLESS STEEL U-BOLTS SHALL HAVE THE THREADS EXCLUDED FROM THE SHEAR PLANE BETWEEN THE SADDLE BLOCK AND BOTTOM CHORD SUPPORT.

SIGN STRUCTURE DRG. OH-D8

NEW JERSEY DEPARTMENT OF TRANSPORTATION
BUREAU OF STRUCTURAL ENGINEERING

OVERHEAD SIGN SUPPORT STRUCTURES
TOWER SHAFT BASE AND TRUSS SEAT DETAILS

ROUTE: SECTION

SCALE : NONE

BRIDGE SHEET NO. B-57 OF B-58

128
129

BDC08B-02 - Engineer Changed to RE
BDC07B-02 - ORIGINAL SHEET

STATE	FEDERAL PROJECT NO.
N.J.	BR-080-5(094)

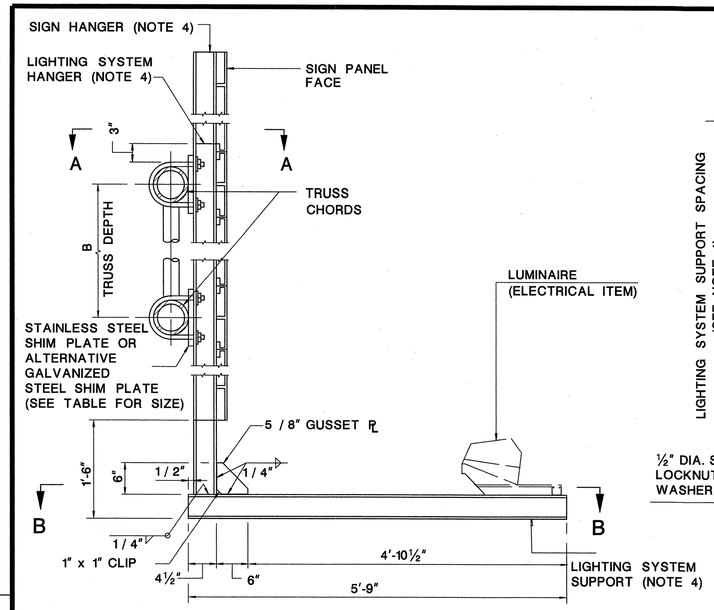

TYPICAL LIGHTING SYSTEM SUPPORT DETAIL

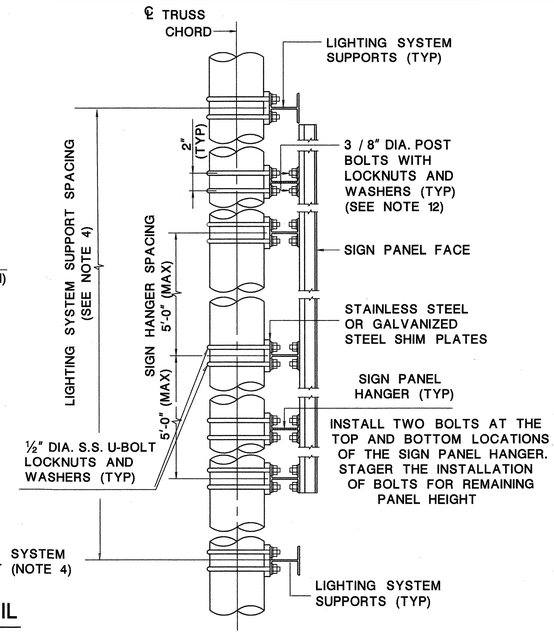

SECTION A-A

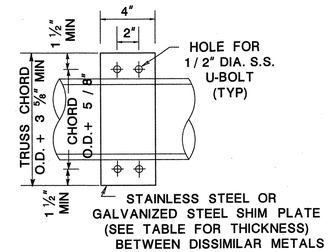

TRUSS CHORD O.D. (IN)	SHIM PLATE THICKNESS* (MIN) (IN)
10.75	3 / 4
12.75	3 / 4
14.0	3 / 4

* FOR TRUSS CHORD SIZES NOT SHOWN, USE 1 / 4" MIN. SHIM PLATE THICKNESS (SEE NOTE 6)

SHIM PLATE DETAIL

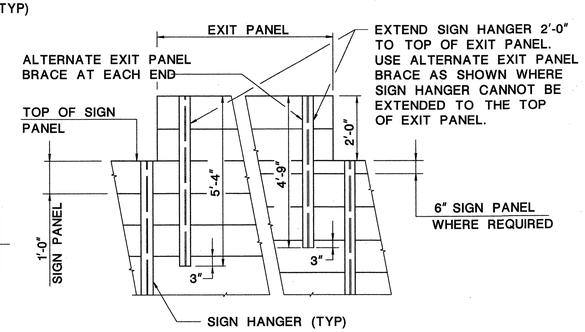

EXIT PANEL CONNECTION DETAIL

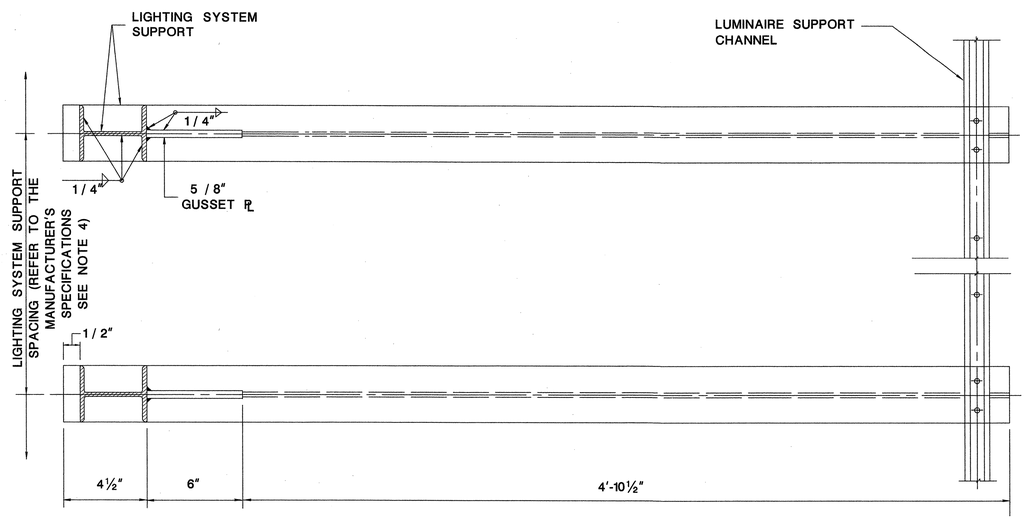

SECTION B-B

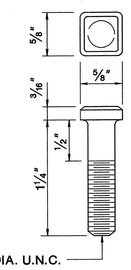

POST BOLT

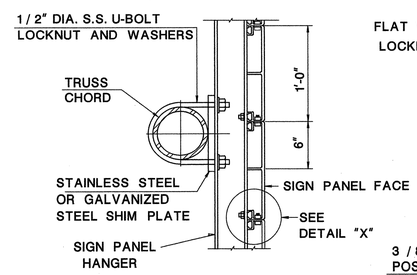

SIGN PANEL CONNECTION DETAIL

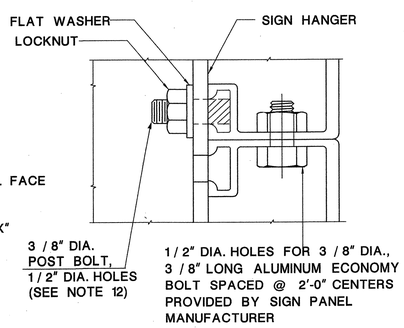

DETAIL "X"

NOTES

1. ALL ALUMINUM MATERIAL SHALL BE ALUMINUM ALLOY 6061-T6 UNLESS OTHERWISE NOTED.
2. ALL BOLTS, U-BOLTS, WASHERS AND NUTS SHALL BE STAINLESS STEEL CONFORMING TO ASTM SPECIFICATION A320 GRADE B8, CLASS 1 AND ASTM A194. STAINLESS STEEL SHIM PLATES SHALL CONFORM TO ASTM SPECIFICATION A167, TYPE 304, OR AS NOTED.
3. WELDING OF ALUMINUM SHALL BE AS SPECIFIED IN AWS D1.2 AND THE NJDOT STANDARD SPECIFICATIONS.
4. SIGN PANEL HANGERS SHALL BE ALUMINUM OR GALVANIZED STEEL: ALUMINUM I-BEAM (DEPTH = 4", WEB AND FLANGE THICKNESS = ¼", FLANGE WIDTH = 3½"); STEEL I-BEAM (W6x9). SIGN HANGER SPACING DESIGNED FOR 15'-0" MAXIMUM SIGN PANEL HEIGHT.

   LIGHTING SYSTEM SUPPORTS SHALL BE ALUMINUM OR GALVANIZED STEEL. THE SUPPORT MEMBER SIZE, SPACING, CONNECTION AND INSTALLATION SHALL ADHERE TO THE WORKING DRAWINGS BASED ON THE COORDINATION OF THE SIGN SUPPORT STRUCTURE FABRICATOR, LIGHTING SYSTEM MANUFACTURER AND DESIGN ENGINEER.

   WHEN THE SIGN HANGER AND LIGHTING SYSTEM SUPPORTS ARE PLANNED TO BE GALVANIZED STEEL, STAINLESS STEEL OR GALVANIZED SHIM PLATES ARE NOT NECESSARY.
5. SIGN HANGERS SHALL BE USED TO SUPPORT SIGN PANELS ONLY. THE SIGN LIGHTING SYSTEM SHALL BE INDEPENDENTLY SUPPORTED.
6. THE THICKNESSES OF THE SHIM PLATES MAY BE MODIFIED TO AVOID INTERFERENCE BETWEEN THE CHORD SPLICE PLATES AND THE SIGN PANELS.
7. LIGHTING SYSTEM SUPPORTS SHALL BE PROVIDED CONTINUOUSLY FOR THE ENTIRE SIGN DESIGN LENGTH UNLESS OTHERWISE SHOWN.
8. LIGHTING SYSTEM SUPPORT HANGERS SHALL PROJECT 3" MIN. ABOVE THE TOP OF THE TOP CHORD AND SHALL NOT SUPPORT SIGN PANELS, UNLESS OTHERWISE NOTED.
9. LENGTH OF SIGN HANGERS SHALL BE EQUAL TO THE SIGN PANEL HEIGHT. BEHIND AN EXIT PANEL, THE HANGERS SHALL BE EXTENDED TO THE TOP OF THE EXIT PANEL.
10. EXIT PANEL CONNECTION DETAIL SHOWN SHALL ALSO BE USED FOR THE ATTACHMENT OF NEW EXIT PANELS TO EXISTING SIGN PANELS.
11. SIGN PANELS SHALL NOT EXTEND MORE THAN 3'-0" BEYOND THE LAST SIGN HANGER.
12. FRICTION TYPE CLIPS OR SIMILAR DEVICES ARE NOT PERMITTED.

SIGN STRUCTURE DRG. OH-D9

NEW JERSEY DEPARTMENT OF TRANSPORTATION
BUREAU OF STRUCTURAL ENGINEERING

OVERHEAD SIGN SUPPORT STRUCTURES
SIGN AND LIGHTING SYSTEM
SUPPORT DETAILS

ROUTE: SECTION

SCALE : NONE

BRIDGE SHEET NO. B-58 OF B-58

129
129

BDC08D-02 - Notes Revision
BDC07D-02 - ORIGINAL SHEET