STATE	FEDERAL PROJECT NO.	SHEET	TOTAL SHEETS
N. J.			

STRUCTURE NO.

STRUCTURE NAME

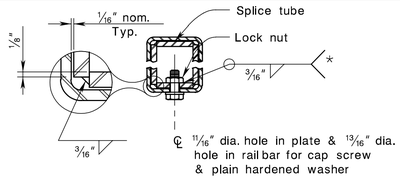

* Weld nuts to plate before assembling splice tube

RAIL BAR SPLICE SECTION

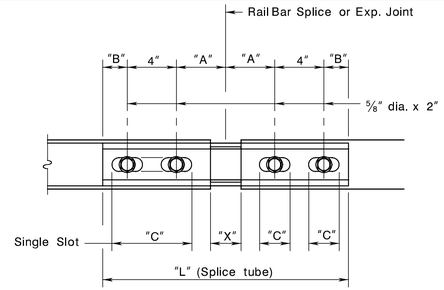

RAIL BAR SPLICE & EXPANSION JOINT DETAIL

(Bottom View)

SPLICE TUBE DIMENSIONS		
	TS 8" X 4"	TS 4" X 4"
Top & Bot. Plates	2½" X 3/8" "L"	2⅝" X 3/8" "L"
Side Plates	6¾" X 3/8" "L"	2⅞" X 3/8" "L"

SPLICE & EXPANSION JOINT TABLE					
"T"	"A"	"B"	"C"	"L"	"X"
Splice	4"	2"	--	1'-8"	¾"
≤ 4"	4"	2"	2½"	1'-8"	2½"
> 4" ≤ 6½"	5½"	2½"	3½"	2'-0"	3¾"
> 6½" ≤ 9"	6½"	3½"	9" *	2'-4"	5"
> 9" ≤ 13"	8½"	4½"	11" *	2'-10"	7"

T = Total Movement

* = Single Slot

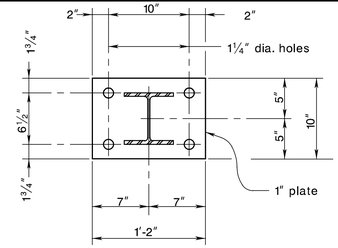

POST & BASE PLATE PLAN

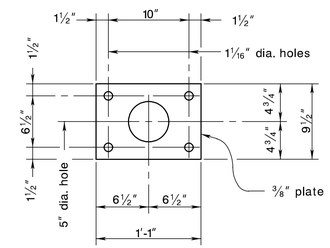

ANCHOR PLATE PLAN

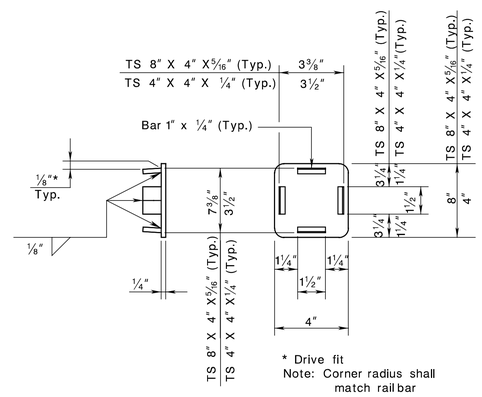

* Drive fit
Note: Corner radius shall match rail bar

RAIL BAR CAP

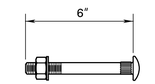

RIBBED NECK BOLT

(with washer & lock nut)

(See Note No. 9)

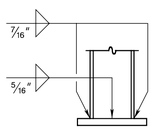

BASE WELD DETAIL

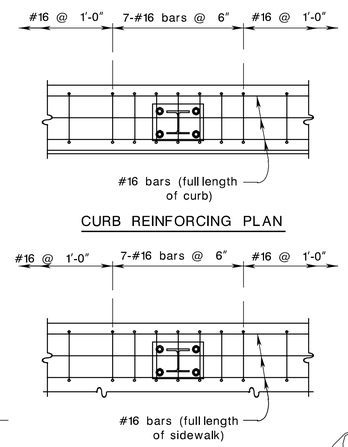

CURB REINFORCING PLAN

SIDEWALK REINFORCING PLAN

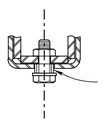

EXPANSION JOINT SECTION

For details not shown, see "Rail Bar Splice Section"

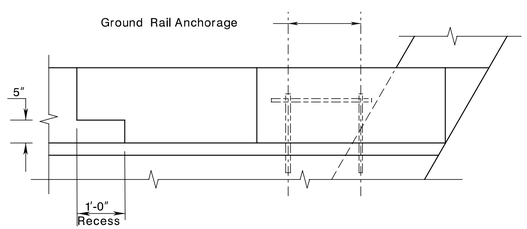

TRANSITION BARRIER PLAN

(Typical all transition barrier types)

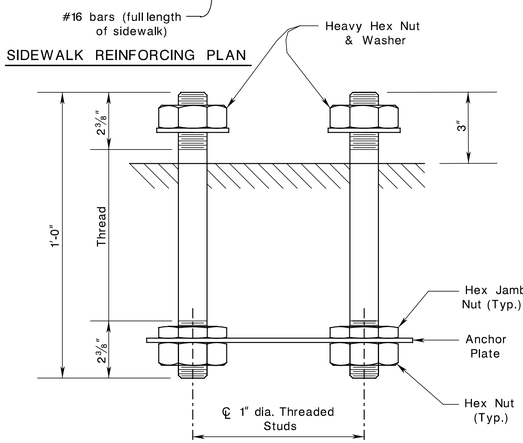

RAIL POST ANCHORAGE

NOTES:

1. All work and materials shall conform to the provisions of Section 508 - Metal Bridge Railing and Fence of the Standard Specifications for Road and Bridge Construction.

2. Twenty five percent of the post-to-base welds in a production lot shall be tested by the Magnetic Particle Method. If rejectable discontinuities are found, another twenty five percent of that production lot shall be tested. If rejectable discontinuities are found in the second twenty five percent, all post-to-base welds in that lot shall be tested. Acceptance criteria shall be in accordance with the latest edition of the AWS D1.5, Bridge Welding Code.

3. All exposed cut or sheared edges shall be rounded and free of burrs. The inside weld flash of tubing shall be removed at splices and expansion joints.

4. Rail posts shall be set normal to grade unless otherwise shown.

5. Lengths of rail bar shall be attached to a minimum of two rail posts and to at least four posts whenever possible.

6. Rail bar expansion joints shall be provided in any rail bay spanning a superstructure expansion joint. Expansion joint width shall be "X" at 45° F and will be adjusted in the field by the Engineer. Refer to detail and table for dimension "X".

7. All parts shall be galvanized after fabrication in accordance with AASHTO M111, except that hardware shall meet the requirements of either ASTM A153 or ASTM B695, Class 50, Type 1. Parts except hardware shall be blast- cleaned prior to galvanizing in accordance with SSPC - SP6.

8. Anchor bolts or anchor bolt sleeves shall be set with a template and shall be securely placed in their final position prior to the placement of the embedding concrete. Post anchor assemblies shall be installed to within 3/16 inch of theoretical horizontal and vertical location. Post bearing areas shall be dressed smooth and true to grade. Prior to post erection, each rail post location shall be finished to the theoretical elevation determined from profile grade, cross slope and curb height and will not be acceptable until it is within 3/16 inch of theoretical elevation, as measured at the top of concrete. Preformed pads shall be used to adjust the rail posts for height and alignment. The number of preformed pads supplied shall be 10 % in excess of the theoretical minimum number required. Nuts securing the post base plate shall be tightened to a snug fit and given an additional ⅛ turn. After erection of the railing, the contractor shall clean the whole assembly, to present a neat and uniform appearance.

9. Rail bars shall alternatively be attached to posts using ⅝" dia. - ASTM F1554, Grade 36 bolts (5/8" dia. - ASTM A325 bolts may be substituted) inserted through the face of the rail bar. Bolts shall be round or dome head and may be rib neck, slotted, wrench head or tension control (TC or twist-off). Holes in posts shall be 1/16" larger than the diameter of the bolt. Holes in rail bars shall be drilled to size as follows:

   Slotted, wrench head or TC bolts --------1/16" larger than bolt diameter
   Rib neck bolts ----- size appropriate to accommodate an interference fit

   All bolts for fastening the rail bars to the posts shall be 6" in length and shall include a flat washer under the nut.

10. Holes in rail bars shall be field - drilled and shall be coated with an approved zinc-rich paint prior to erection.

11. Bolts in expansion joints shall be tightened only to a point that will allow rail movement.

12. If there is a conflict between these Standard Details and the Shop Drawings, the contractor shall notify the Engineer immediately.

13. ⅛" pads under post base plate shall be fabric pads conforming to Subsection 919.02.B of the Standard Specifications.

MATERIALS:

Rail bars ---------- ASTM A500, Grade B
Rail posts ---------- AASHTO M223 (ASTM A572), Grade 50
All other shapes & plates ---------- AASHTO M270 (ASTM A709), Grade 36
Anchor studs, washers & exposed nuts ---- ASTM F1554, Grade 55
All other bolts & nuts (unless noted) ------ ASTM F1554, Grade 36

BDC04MB-01

STANDARD DRAWING PLATE 2.2-2

NEW JERSEY DEPARTMENT OF TRANSPORTATION
BUREAU OF STRUCTURAL ENGINEERING

4 - BAR OPEN STEEL BRIDGE RAILING DETAILS

ROUTE : SECTION :

MUNICIPALITY COUNTY

SCALE : NONE

BRIDGE SHEET NO. OF

CONTROL SECTION		JOB NO.	
DES. BY		CHK. BY	
DWN. BY			
EST. BY		CHK. BY	
SPECS. BY			

IN CHARGE OF

BDC04MB-01

pen table= Ex_SystemIpfd\TBLs\Non-Roadway\bridge.tbl
scale= 0.084657-1.000000
date= 18-FEB-2005 15:05
ID= bfc412300
file= c:\WORKDATA\CADD\DesManual\Standard Drawings - English\Esp2_2-2.dgn