STATE	FEDERAL PROJECT NO.	SHEET	TOTAL SHEETS
N. J.			

(D) STRUCTURE NO.

STRUCTURE NAME

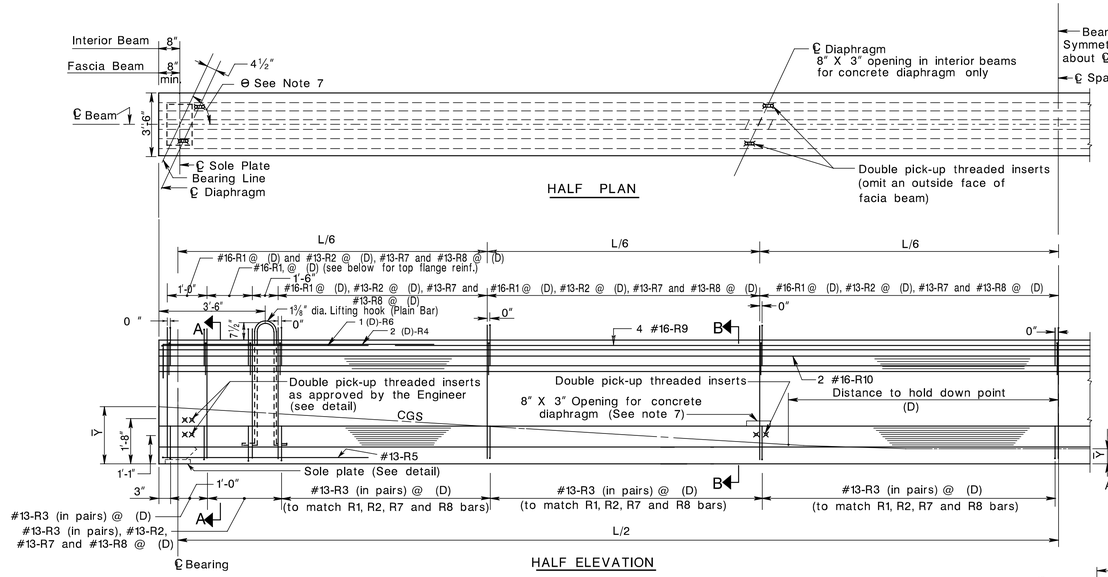

NOTE:
DEBONDED STRAIGHT STRANDS MAY BE UTILIZED AS AN ALTERNATE TO DRAPED STRANDS. ONE PIECE STIRRUPS MAY BE UTILIZED AS AN ALTERNATE TO TWO PIECE STIRRUPS.

SCHEDULE OF MILD STEEL REINFORCEMENT

NO.	MARK	SIZE	LENGTH	TYPE	A	B	C	D
(D)	✳ R1	#16	11'-6¾"	1	5'-6"	5⅝"	—	—
(D)	✳ R2	#13	6'-7¾"	5	1'-7"	4"	2½"	3'-3"
(D)	R3	#13	3'-5⅜"	3	10¾"	10¾"	6"	1'-8"
(D)	✳ R4	(D)	10'-6"	2	9'-0"	1'-6"	—	—
(D)	✳ R5	#13	17'-0"	2	7'-6"	2'-0"	7'-6"	—
(D)	✳ R6	(D)	20'-11"	2	9'-0"	3'-0"	9'-0"	—
(D)	R7	#13	2'-1"	4	5"	6½"	6½"	—
(D)	✳ R8	#13	6'-7"	6	—	—	—	—
(D)	✳ R9	#16	(D)	STR.				
(D)	R10	#16	(D)	STR.				

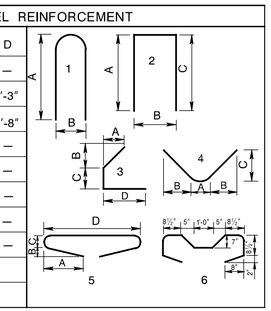

✳ CORROSION PROTECTED BARS (REFER TO SECTION 26 OF THIS MANUAL FOR TYPES OF CORROSION PROTECTED REINFORCEMENT STEEL THAT CAN BE USED)

GENERAL NOTES

1. DESIGN SPECIFICATIONS

(D) The AASHTO LRFD Bridge Design Specifications, with current interims, as modified by Section 3 of the NJDOT Design Manual for Bridges and Structures.

2. LIVE LOAD

HL-93 or NJDOT Permit Vehicle, whichever governs.

3. PRESTRESSING STEEL

The pretensioning strands shall be ½" dia. or 0.6" dia., 7-wire uncoated steel strands conforming to current AASHTO M203 Grade 270 and shall be low relaxation strands. Each strand shall be given an initial tension of 0.75 f's x As as specified in applicable sections of the PCI Design Handbook - Precast and Prestressed Concrete. Any change in the system of prestressing must be accompanied by complete calculations for approval by the Engineer.

4. CONCRETE DESIGN STRESSES

(D) Design compressive strength (f'c) = _____ psi, class _____ concrete,
(D) Compressive strength at prestress (f'ci) = _____ psi.

5. CONCRETE

All exposed corners shall be chamfered ¾" or rounded to ¾" radius. Angles of intersection between webs and flanges shall be rounded to not less than ¾" radius. Top surface of beams shall be roughened to the satisfaction of the Engineer. At approximate time of initial set all laitance shall be removed with a stiff wire brush.

6. SOLE PLATES

Cost of Sole Plates shall be included in price bid for Prestressed Concrete Beams. Sole Plates shall be galvanized as per Specifications.

7. DIAPHRAGMS

For the angle Θ between the center line of beam and center line of diaphragms or bearings reference the Framing Plan.

8. MILD STEEL REINFORCEMENT

Reinforcement bars shall conform to ASTM A615, Grade 60. Minimum clear cover shall be 1½" unless otherwise noted. Cost of furnishing and placing reinforcement steel shall be included in the price bid for Prestressed Concrete Beams.

(D) 9. For camber diagram see sheet No. B _____

BEAM NO.	Ȳ MIDSPAN	Ȳ ENDS	NO. OF STRANDS
(D)			

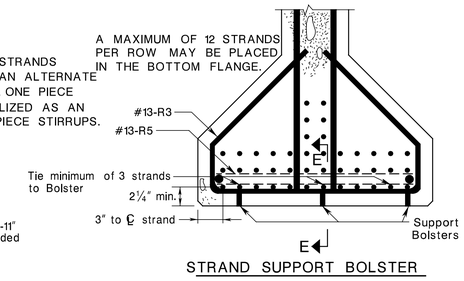

STRAND SUPPORT BOLSTER

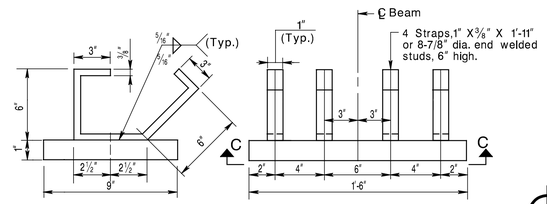

SOLE PLATE

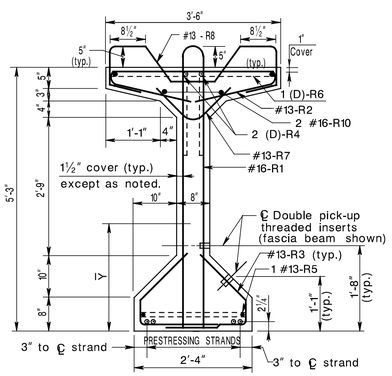

SECTION A-A
END

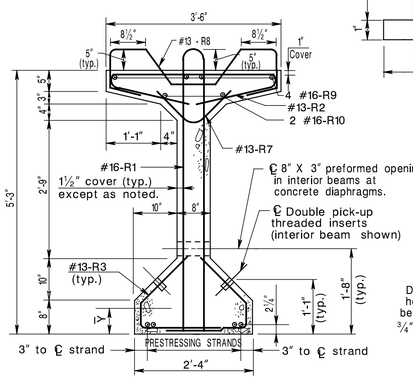

SECTION B-B
MIDSPAN

TYPICAL BEAM SECTIONS

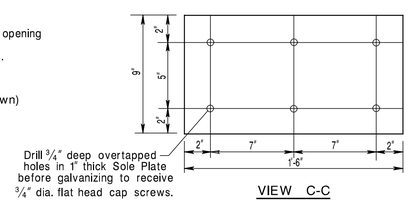

VIEW C-C

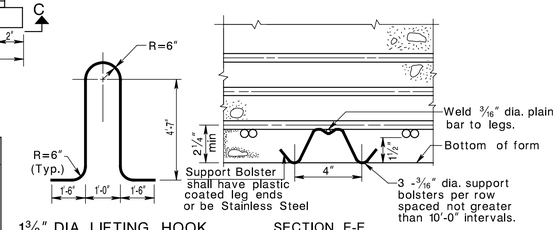

1⅜" DIA. LIFTING HOOK
(OR EQUAL)

SECTION E-E

QUANTITIES				
PAY ITEM NO.	STANDARD ITEM NO.	DESCRIPTION	UNIT	CONTRACT QUANTITY
(D)		PRETENSIONED PRESTRESSED CONCRETE BEAMS, 63"	L.F.	

NOTE : Ȳ LOCATES CENTROID OF STEEL PRESTRESSING GROUP

NOTE : OMIT THREADED INSERTS ON OUTSIDEFACE OF FASCIA BEAM

NOTE : ON MODERATE TO HIGH SKEWS, IT MAY BE NECESSARY TO FORM THE TOP FLANGE AS SHOWN HERE

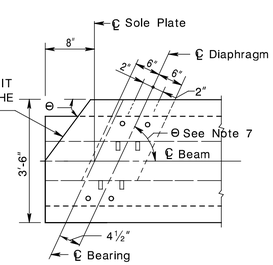

PLAN AT ABUTMENT
END OF BEAM

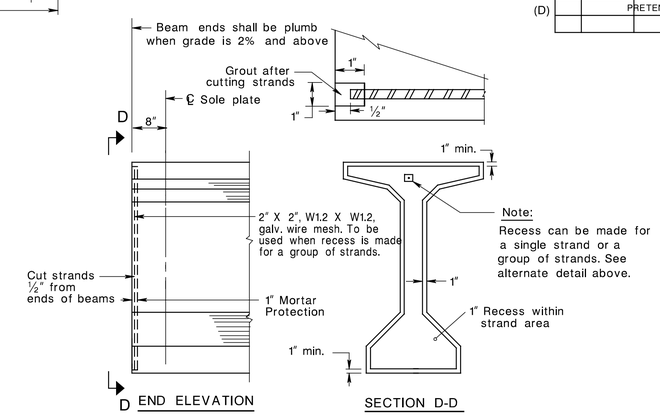

GROUTED RECESS FOR STRAND
AT BEAM ENDS

CONTROL SECTION		JOB NO.	
DES. BY		CHK. BY	
DWN. BY			
EST. BY		CHK. BY	
SPECS. BY			

IN CHARGE OF _____

(D)

BDC04MB-01

REVISION	BY	CKD	DATE

BDC04MB-01

STANDARD DRAWING PLATE 2.4-3

NEW JERSEY DEPARTMENT OF TRANSPORTATION
BUREAU OF STRUCTURAL ENGINEERING

63" PRETENSIONED PRESTRESSED CONCRETE BEAMS

ROUTE (D) SECTION

SCALE : NONE

BRIDGE SHEET NO B OF B

pen table=E:_System\plot\TBLs\Non-Roadway\bridge.tbl
scale=0.084657-1.000000
date=18-FEB-2005 15:20
ID=16412300
file=c:\WORKDATA\CADD\DesManual\Standard Drawings - English\Esp2_4-3.dgn