STATE	FEDERAL PROJECT NO.	SHEET	TOTAL SHEETS
N. J.			

STRUCTURE NO.

STRUCTURE NAME

INTEGRAL ABUTMENT CONSTRUCTION PROCEDURE

1. FOR BRIDGE LENGTHS OVER 100 FT. PRE-EXCAVATE HOLES TO A DEPTH OF 8 FT. BELOW THE STEM AT THE DIAMETER SPECIFIED IN THE FOUNDATION DESIGN REPORT.
2. DRIVE THE PILES AND AND CUT OFF PILES AT ELEVATIONS SHOWN.
3. BACKFILL HOLES WITH DESIGNATION I-8 SAND.
4. IF CIP PILES ARE USED, FILL THE SHELL WITH CONCRETE. PLACE THE ABUTMENT STEM CONCRETE TO REQUIRED BRIDGE SEAT ELEVATION.
5. ERECT PRESTRESSED GIRDERS ON BEARING PADS AND SOLE PLATE AS REQUIRED.
6. PLACE AND GROUT ANCHOR DOWELS.
7. BACKFILL BOTH ABUTMENT STEMS TO 6" BELOW THE BRIDGE SEAT ELEVATION AFTER THE ABUTMENT STEM IS CURED. BACKFILL SHALL BE CONDUCTED SUCH THAT THE MAXIMUM DIFFERENCE IN FILL HEIGHT BETWEEN THE TWO STEMS AS MEASURED FROM THE BOTTOM OF THE STEM DOES NOT EXCEED 2'-0".
8. PLACE CONCRETE ABOVE BRIDGE SEAT ELEVATION FOR ABUTMENT BACKWALL AND DECK SLAB. TO FACILITATE COMPLETE CONSOLIDATION OF CONCRETE BETWEEN THE TOP OF THE BRIDGE SEAT AND THE BOTTOM OF THE BEAM, VENT HOLES SHALL BE PROVIDED FOR THE INSERTION OF A 1" DIAMETER VIBRATOR IN THE FRONT FORM FROM UNDER EACH BEAM.
8. AFTER THE ABUTMENT CONCRETE IS CURED, POUR DECK IN PROPER SEQUENCE EXCLUDING THE BACKWALL DIAPHRAGM AND A PORTION OF THE DECK SLAB THAT IS EQUAL TO THE BACKWALL DIAPRAGM WIDTH.
9. TIGHTEN THE ANCHOR NUTS AND POUR THE BACKWALL/DIAPHRAGM FULL HEIGHT. THE WINGWALLS MAY ALSO BE POURED CONCURRENTLY.
10. PLACE CONCRETE FOR RELIEF SLABS.

NOTE TO DESIGNER:

DETAILING INCLUDED WITHIN THIS DRAWING MAY BE UTILIZED IN PREPARING CONTRACT PLANS. HOWEVER, IN CONFORMANCE WITH THE PROVISIONS OF SECTION 15 OF THIS MANUAL, ALTERNATIVE DETAILING MAY BE PROVIDED.

NOTES:

1. ALL REBARS IN THE ABUTMENT ARE TO BE CORROSION PROTECTED. (REFER TO SECTION 26 OF THIS MANUAL FOR TYPES OF CORROSION PROTECTED REINFORCEMENT STEEL THAT CAN BE USED)
2. THE ANCHOR RODS AND BASE PLATE TO BE DESIGNED TO SUPPORT THE DEAD LOAD OF THE GIRDERS, DIAPHRAGMS AND UTILITIES.

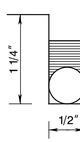

1/2" JOINT DETAIL

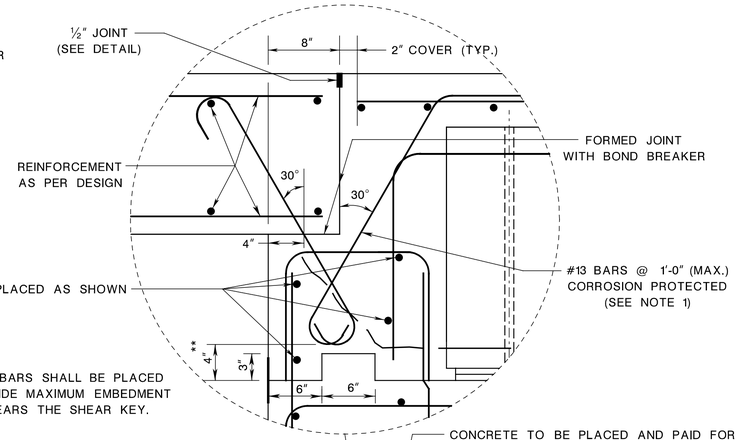

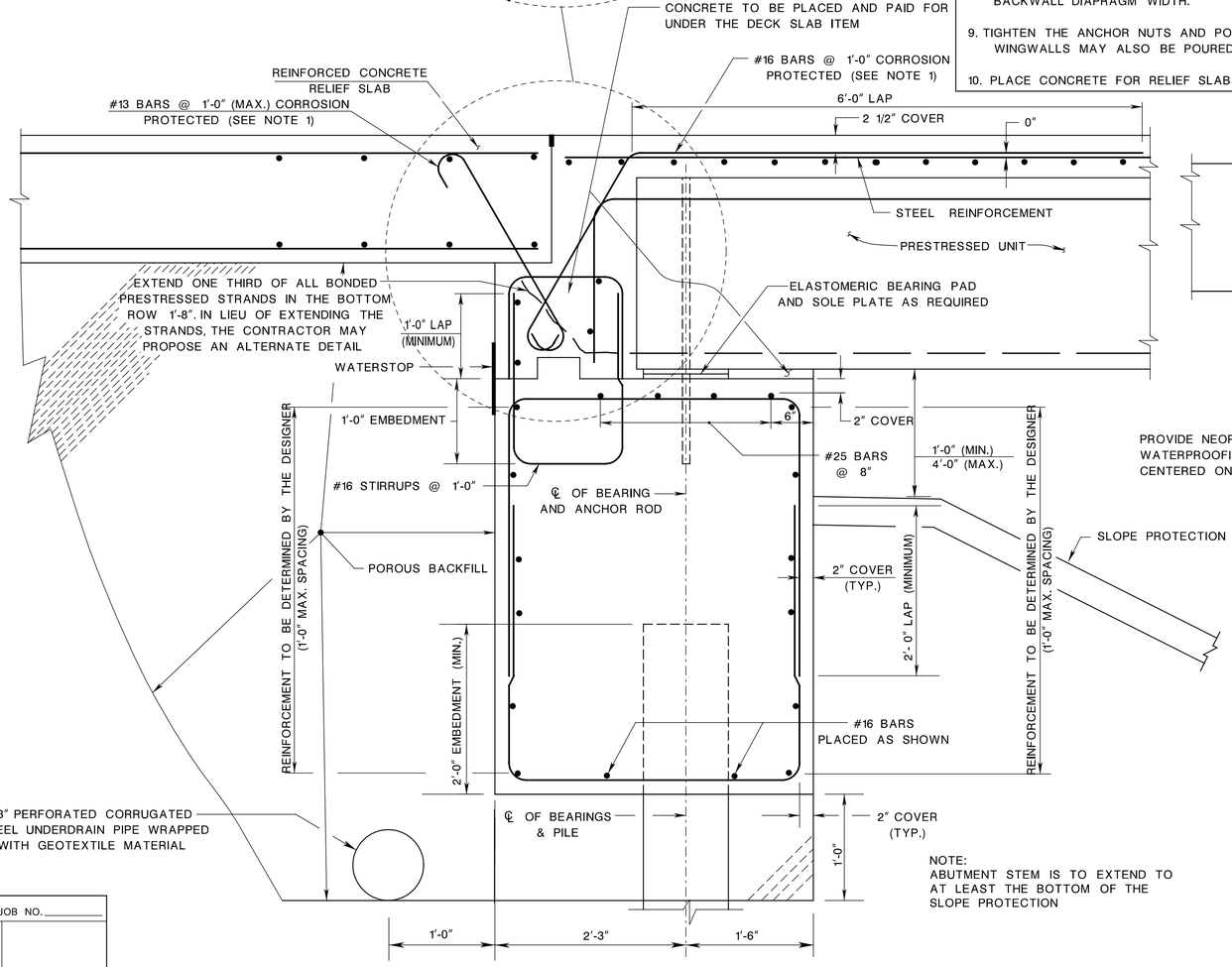

NOTE:
ABUTMENT STEM IS TO EXTEND TO AT LEAST THE BOTTOM OF THE SLOPE PROTECTION

INTEGRAL ABUTMENT DETAIL
(PRESTRESSED CONCRETE GIRDER SUPERSTRUCTURE)

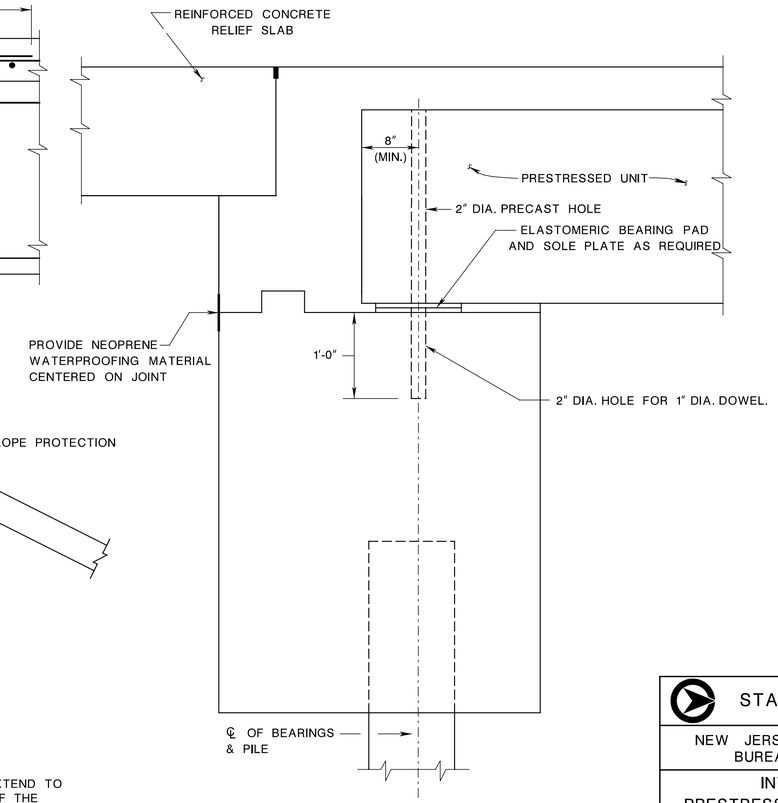

TYPICAL INTERIOR GIRDER ELEVATION

CONTROL SECTION		JOB NO.	
DES. BY		CHK. BY	
DWN. BY			
EST. BY		CHK. BY	
SPECS. BY			

IN CHARGE OF

BDC04MB-01

BDC04MB-01

STANDARD DRAWING PLATE 2.9-3

NEW JERSEY DEPARTMENT OF TRANSPORTATION
BUREAU OF STRUCTURAL ENGINEERING

INTEGRAL ABUTMENTS FOR
PRESTRESSED CONCRETE SUPERSTRUCTURE

ROUTE : SECTION :

MUNICIPALITY COUNTY

SCALE : NONE

BRIDGE SHEET NO. OF

pen table=Eng_Systems\fpl64\TBLs\Nonc-Roadway\bridge.tbl
scale=0.0846571.000000
date=18-FEB-2005 15:40
ID=b6412300
file=c:\WORKDATA\CADD\DesManual\Standard Drawings - English\Esp2_9-3.dgn