STATE	FEDERAL PROJECT NO.
N.J.	

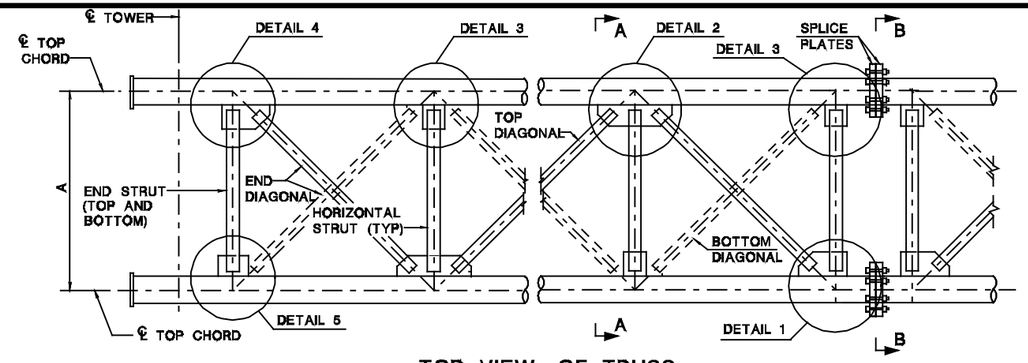

TOP VIEW OF TRUSS

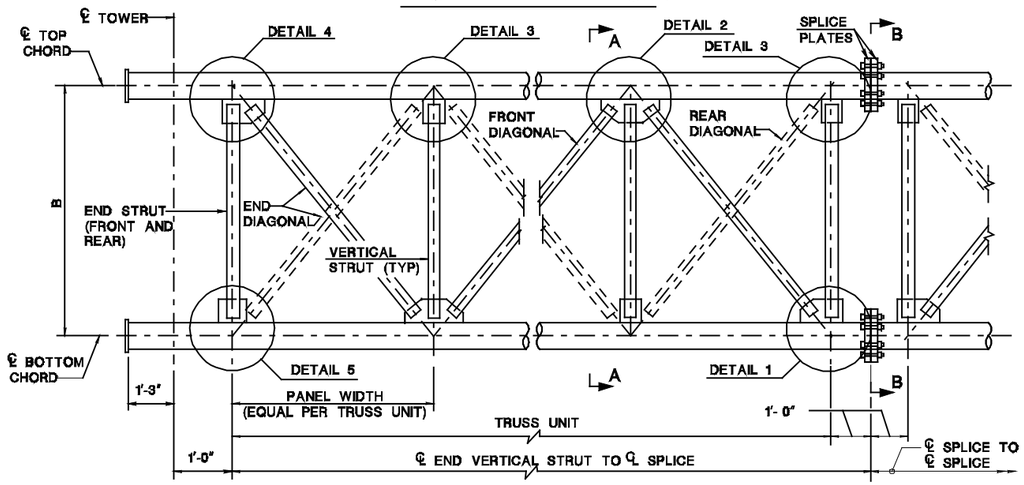

FRONT VIEW OF TRUSS

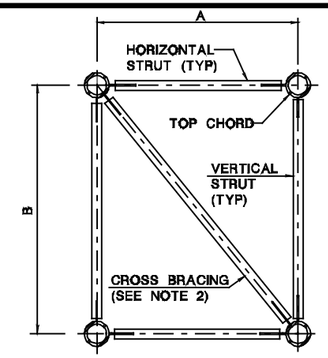

SECTION A-A

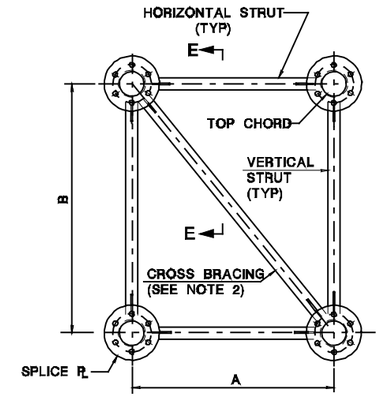

SECTION B-B

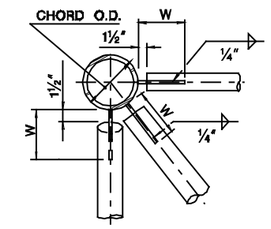

SECTION C-C

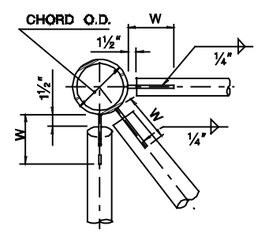

SECTION D-D

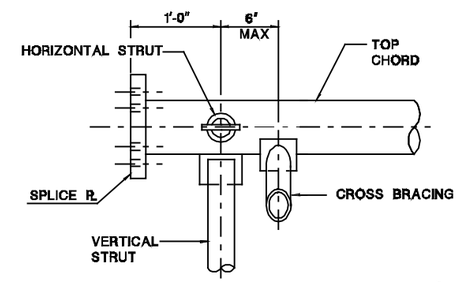

SECTION E-E

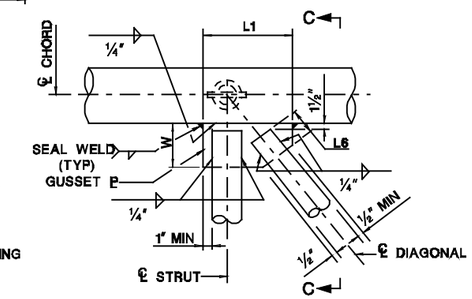

DETAIL 1 (SEE COPE HOLE DETAIL)

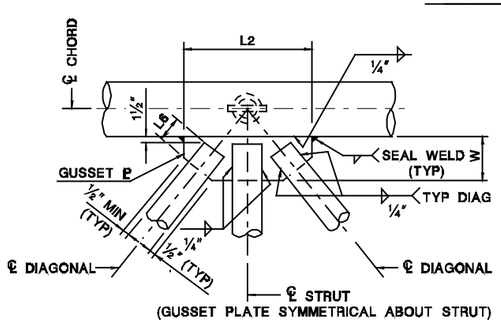

DETAIL 2

(SEE COPE HOLE DETAIL)

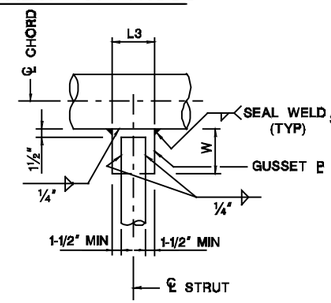

DETAIL 3

(SEE COPE HOLE DETAIL)

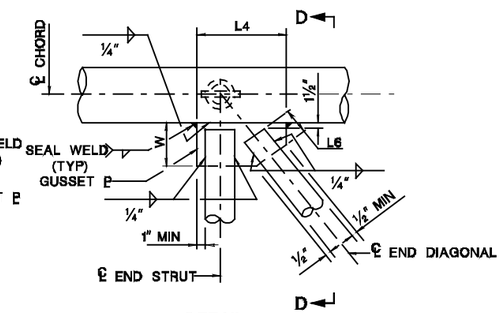

DETAIL 4

(END 'K' GUSSET)
(SEE COPE HOLE DETAIL)

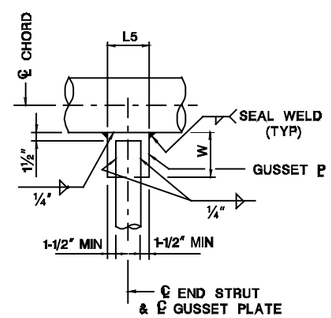

DETAIL 5

(END 'T' GUSSET)
(SEE COPE HOLE DETAIL)

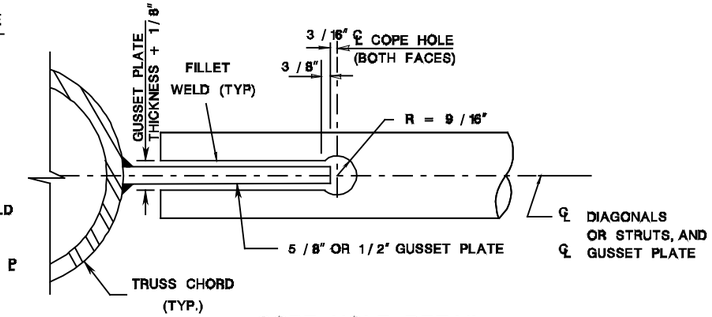

COPE HOLE DETAIL

NOTE:

COPE HOLES TO BE PROVIDED AT BOTH ENDS AND BOTH FACES OF ALL STRUTS AND DIAGONALS.

TRUSS GUSSET PLATE DIMENSIONS

CHORD O.D. (IN)	PLATE THICKNESS	PLATE WIDTH W	"K" GUSSET MIN. L1	"K-T" GUSSET MIN. L2	"T" GUSSET MIN. L3	"END - K" GUSSET MIN. L4	"END - T" GUSSET MIN. L5	WELD LENGTH MIN. L6
3.500	½"	6½"	10"	1'-2"	6½"	10"	6½"	3½"
4.000	½"	6½"	10"	1'-2"	6½"	10"	6½"	3½"
4.500	½"	6½"	10"	1'-2"	6½"	10"	6½"	3½"
5.563	½"	6½"	10"	1'-2"	6½"	10"	6½"	3½"
6.625	⅝"	7"	10⅜"	1'-3"	6½"	1' - 0"	6½"	4"
8.625	⅝"	7½"	11¼"	1'-5"	6½"	1' - 0½"	6½"	4¾"
10.750	⅝"	8"	1'-0¼"	1'-7"	6½"	1' - 4"	6½"	5"
12.750	⅝"	8½"	1'-1"	1'-8½"	6½"	1' - 4"	6½"	5½"
14.000	⅝"	8½"	1'-1½"	1'-9½"	6½"	1' - 4½"	6½"	5½"

NOTES:

1. THE SIZE OF CROSS BRACING MEMBERS SHALL BE THE SAME AS THAT OF THE DIAGONALS. CROSS BRACING SHALL BE LOCATED AT THE ENDS OF EACH TRUSS UNIT AND SPACED AT EVERY THIRD PANEL MAXIMUM, ALTERNATING IN DIRECTION.
2. FOR CHORD CAP DETAILS, SEE SIGN STRUCTURE DRG. OH-D8.
3. FOR CHORD SPLICES, SEE SIGN STRUCTURE DRG. OH-D6.
4. THE LENGTHS SHOWN IN THE TABLE FOR THE TRUSS GUSSET PLATE ARE ABSOLUTE MINIMUM DIMENSIONS. THE ACTUAL DIMENSIONS REQUIRED WILL DEPEND ON THE PANEL DEPTH AND WIDTH USED.

SIGN STRUCTURE DRG. OH-D5

NEW JERSEY DEPARTMENT OF TRANSPORTATION
BUREAU OF STRUCTURAL ENGINEERING

OVERHEAD SIGN SUPPORT STRUCTURES
STEEL TRUSS DETAILS - SHEET 1

ROUTE: SECTION

SCALE : NONE

BRIDGE SHEET NO.____ OF____

BDC07D-03 - ORIGINAL SHEET