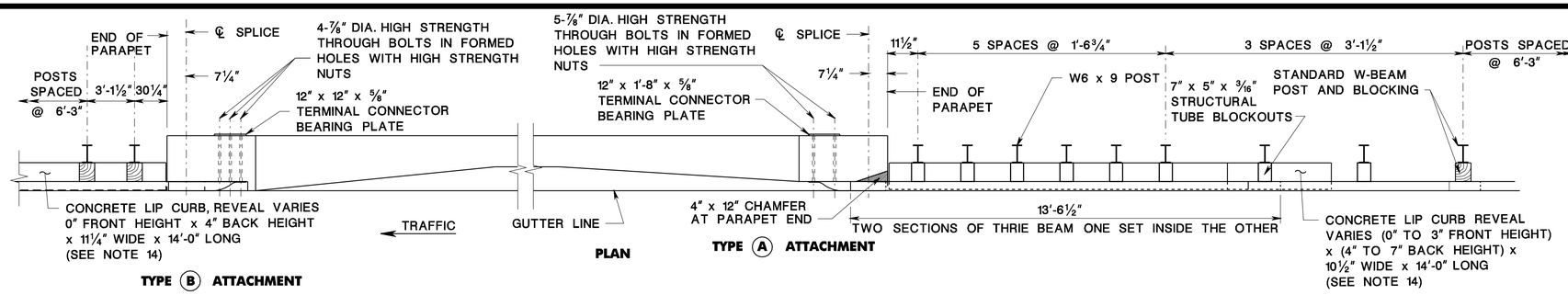

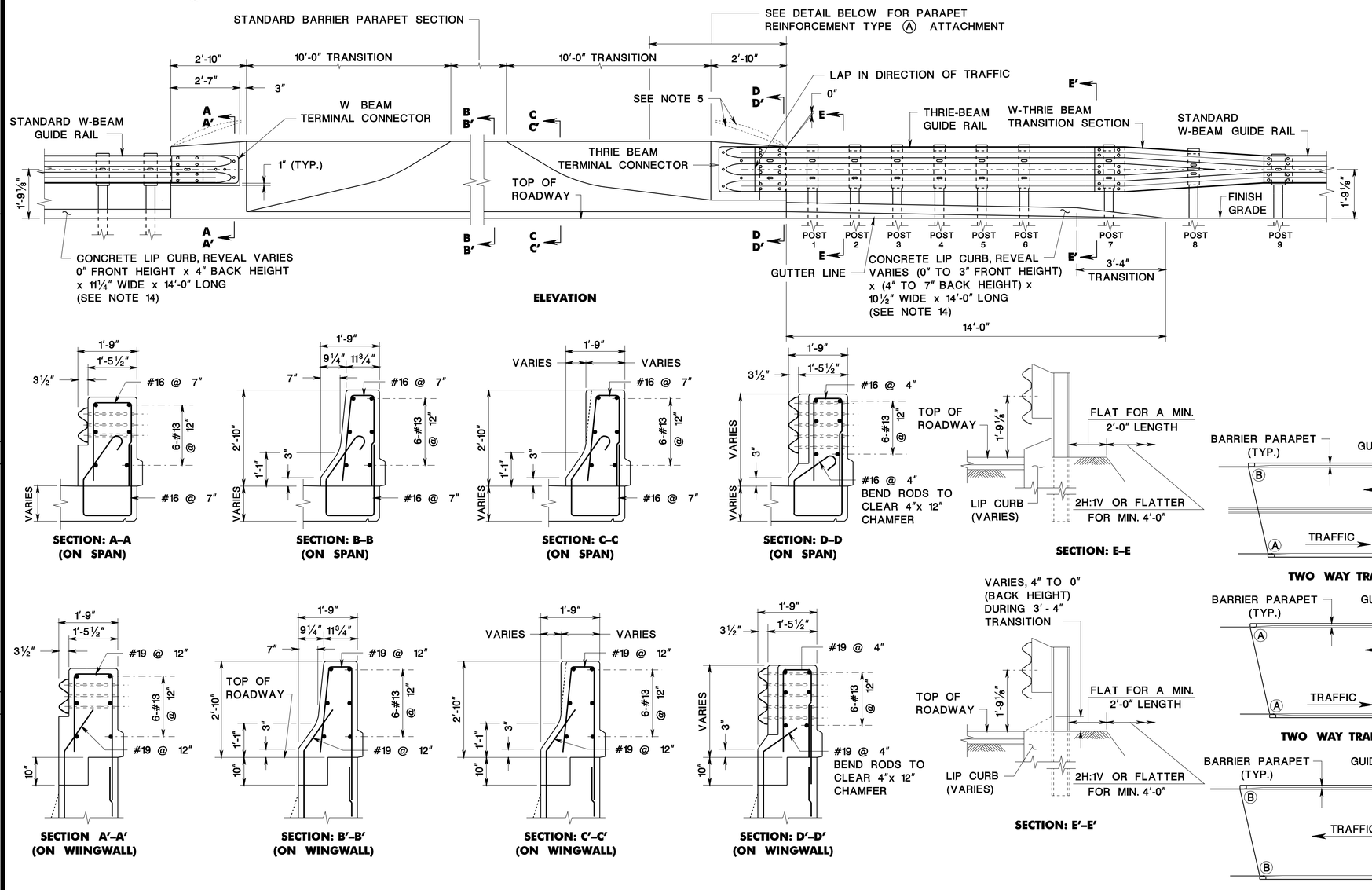

NOTES:

1. THIS GUIDE RAIL TRANSITION IS APPROPRIATE FOR CONNECTION TO A VERTICAL CONCRETE SHAPE AND SHOULD NOT BE CONNECTED DIRECTLY TO A CONCRETE SAFETY SHAPE. CONCRETE SAFETY BARRIER SHOULD BE TRANSITIONED TO A VERTICAL SHAPE AT THE GUIDE RAIL CONNECTION.
2. FOR RECOMMENDED ATTACHMENT, REFER TO "BRIDGE ATTACHMENT TYPES", THIS SHEET.
3. ALL CROSS SLOPES BETWEEN THE PAVEMENT EDGE AND POSTS SHALL BE 10H:1V OR FLATTER.
4. EMBANKMENT MATERIAL CONFORMING TO THE NJDOT STANDARD SPECIFICATIONS SECTION 203 SHALL EXTEND FLAT BEHIND THE POSTS AT LEAST 2'-0" AT WHICH POINT A SLOPE OF NO STEEPER THAN 2H:1V SHOULD EXTEND A MINIMUM OF 4'-0" FURTHER.
5. BARRIER PARAPET END MAY HAVE TO BE RECONFIGURED TO ACCEPT DIFFERENT TYPES OF RAILING OR FENCING THAT MAY BE MOUNTED ON TOP OF THE PARAPET.
6. AT TYPE (A) ATTACHMENTS, THRIE BEAM RAIL ELEMENT WILL REQUIRE ADDITIONAL POST MOUNTING HOLES FOR POST #1, #3 AND #5. CAUTION, HOLES ARE TO BE SHOP PUNCHED OR DRILLED BEFORE GALVANIZATION. NO FIELD DRILLING IS PERMITTED.
7. POSTS 1 THRU 7 SHALL BE 7'-2" LONG WITH 4'-10" POST EMBEDMENT. POST 8 SHALL BE 6'-8" LONG WITH 4'-6" POST EMBEDMENT. POST 9 SHALL BE 6'-8" LONG WITH 4'-4" POST EMBEDMENT.
8. LOCATE CONDUIT AT END OF BARRIER PARAPETS SO AS NOT TO INTERFERE WITH GUIDE RAIL POST SPACING.
9. LOCATE DRAINAGE INLETS AND ELECTRICAL JUNCTION BOXES ON APPROACHES SO AS NOT TO INTERFERE WITH GUIDE RAIL POST SPACING.
10. STRUCTURAL STEEL PLATES AND SHAPES SHALL CONFORM TO AASHTO M270 AND SHALL BE GALAVANIZED PER AASHTO M111.
11. HIGH STRENGTH STEEL BOLTS, NUTS AND WASHERS SHALL CONFORM TO AASHTO M164. ZINC COATED BOLTS, NUTS AND WASHERS SHALL BE TREATED ACCORDING TO AASHTO M232M.
12. THE THICKNESS OF THRIE-BEAM, W-BEAM AND W-THRIE BEAM TRANSITION SHALL BE 12-GAUGE.
13. FOR ADDITIONAL THRIE BEAM, AND W-BEAM DETAILS REFER TO CD-609-1, CD-609-3, AND CD-609-12.
14. CONCRETE LIP CURB TO BE PAID UNDER 9"X16" CONCRETE VERTICAL CURB,SEE CD-607-1.9. CONCRETE LIP CURB MAY BE OMITTED AT UNDERPASS, WHERE EROSION CONTROL IS NOT NECESSARY.
15. WHEN THE CONFIGURATION OF BRIDGE ABUTMENTS AND WINGWALLS DO NOT ACCOMMODATE THE INSTALLATION OF POST 1, THE POST MAY BE ATTACHED TO THE ABUTMENT HEADER WITH THE USE OF A BASE PLATE.

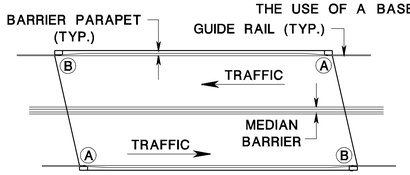

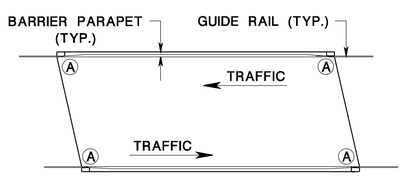

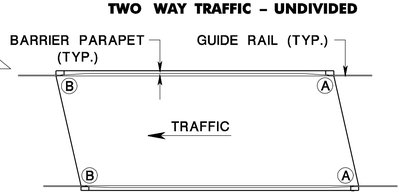

BRIDGE ATTACHMENT TYPES
CD-609-13.1

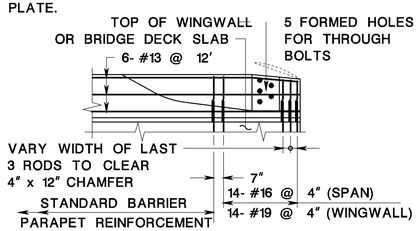

INTERIOR ELEVATION
PARAPET REINFORCEMENT
TYPE (A) ATTACHMENT

REINFORCEMENT STEEL IS IN METRIC UNITS.

BEAM GUIDE RAIL ATTACHMENTS

N.T.S.

CD-609-13

NEW JERSEY DEPARTMENT OF TRANSPORTATION

CONSTRUCTION DETAILS

GUIDE RAIL ATTACHMENT – NEW CONSTRUCTION
NEW JERSEY BARRIER SHAPE PARAPET (NO ROADWAY CURBING ON APPROACH)

ID=TFXBHAV date=17-DEC-2007 09:48 scale=30.000000:1.000000 pen table=\\Njdotprjvs\v8system\NJDOTWS\Projects\NJDOTEng\plot\TBLs\Roadway\basic.tbl
BDC07D-01: ORIGINAL SHEET
file=