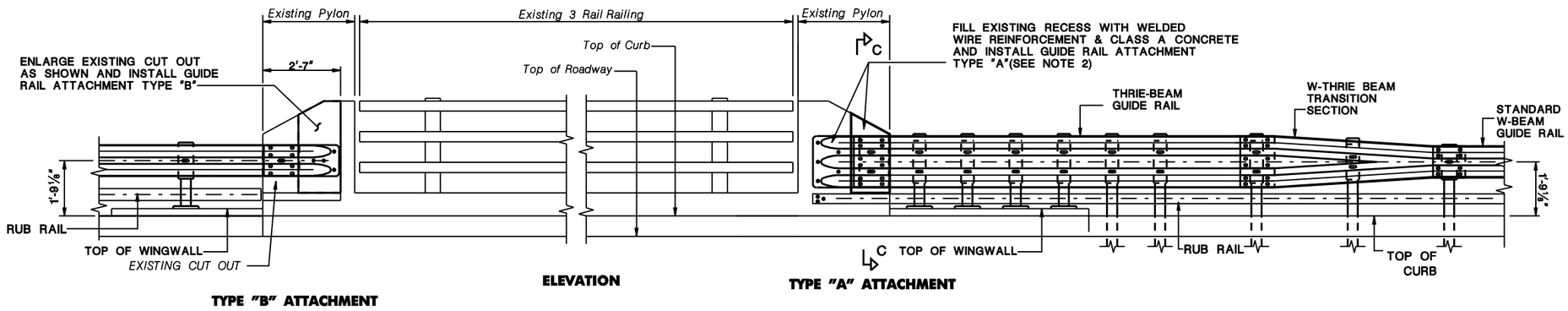

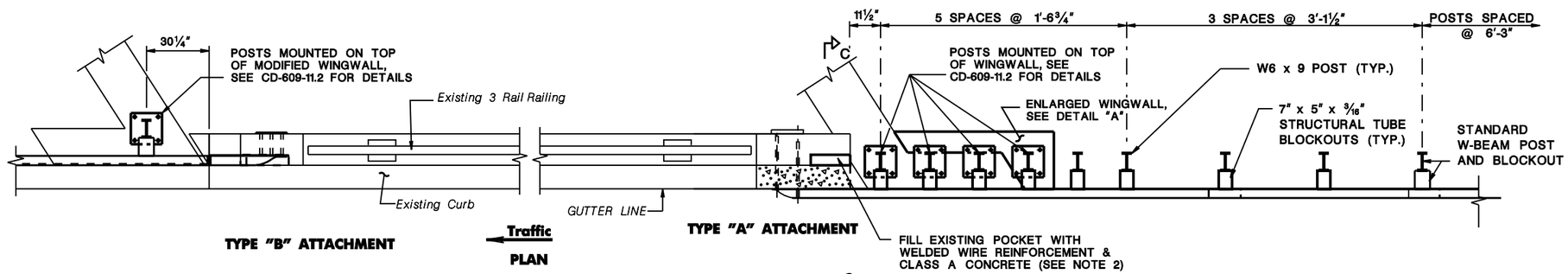

PROPOSED GUIDE RAIL ATTACHMENTS AT EXISTING PYLON

Scale: ½"=1'-0"

LEGEND

PROPOSED CLASS A CONCRETE

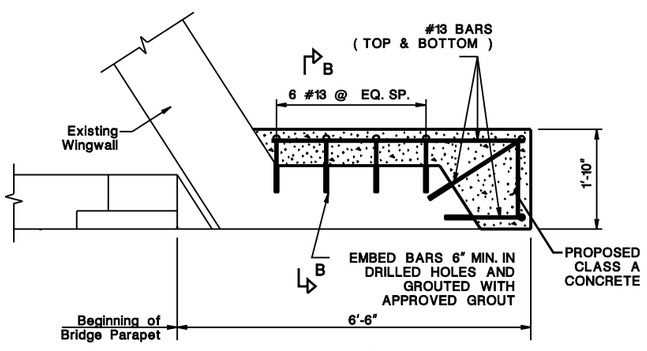

DETAIL "A"

Scale: ¾" = 1'-0"

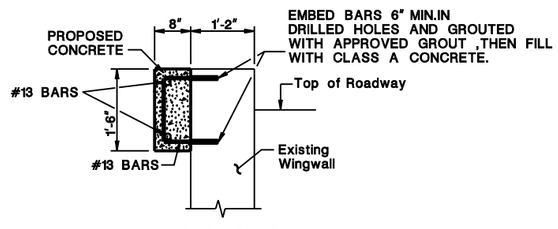

SECTION: B-B

Scale: ¾" = 1'-0"

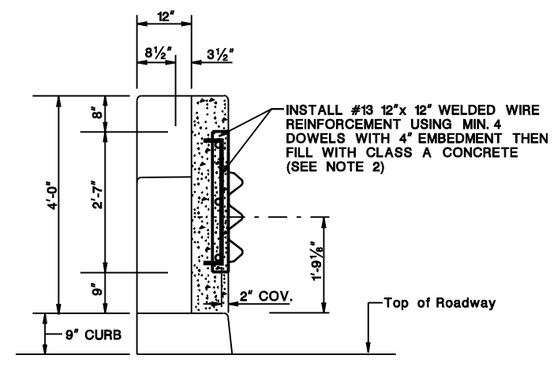

SECTION: C-C

Scale: ¾" = 1'-0"

NOTES:

1. INCLUDE COST OF CONCRETE, REINFORCEMENT STEEL, DRILLING AND GROUTING, SAW CUTTING, RELOCATING FENCE POSTS, RAILS AND PLATES AND ANY OTHER WORK RELATED TO PARAPET MODIFICATIONS FOR GUIDE RAIL ATTACHMENTS IN PAY ITEM "PARAPET MODIFICATIONS".
2. CONFORM WELDED WIRE REINFORCEMENT TO SUBSECTION 905.01.03 OF NJDOT STANDARD SPECIFICATION.
3. FOR BRIDGE ATTACHMENT TYPES AND ADDITIONAL DETAILS, REFER TO CD-609-16.

3-RAIL RAILING WITH PYLON

BCD-609-7

NEW JERSEY DEPARTMENT OF TRANSPORTATION
BUREAU OF STRUCTURAL ENGINEERING

BRIDGE CONSTRUCTION DETAILS

GUIDE RAIL ATTACHMENT – EXISTING STRUCTURE WITH APPROACH AND /OR TRAILING WINGWALLS & APPROACH CURB

BCD-609-7.1

146G
146

BCD-609-01-ORIGINAL SHEET

pen table=.
scale=.
date=.
ID=.
file=.