P.C. SPREAD BOX BEAMS DIAPHRAGM DETAILS (SHEET 3 OF 3)	ISSUED: 2009	PLATE 3.10–22

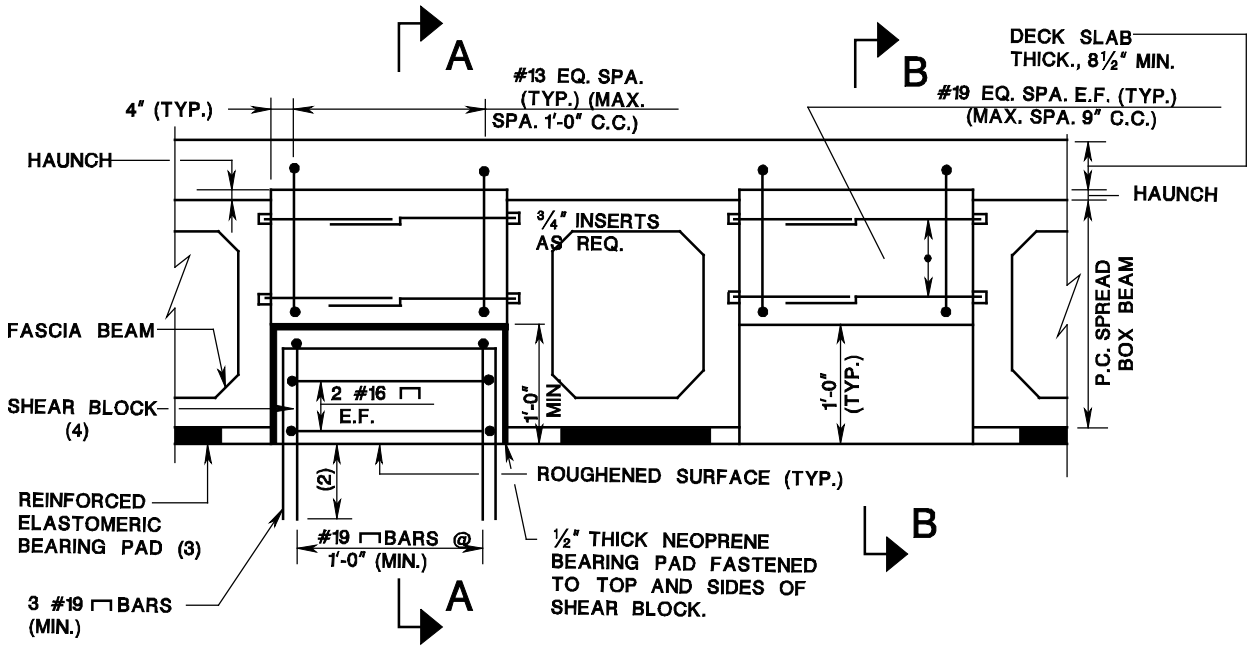

TYPICAL DIAPHRAGM AT ABUTMENT OR PIER (EXPANSION)

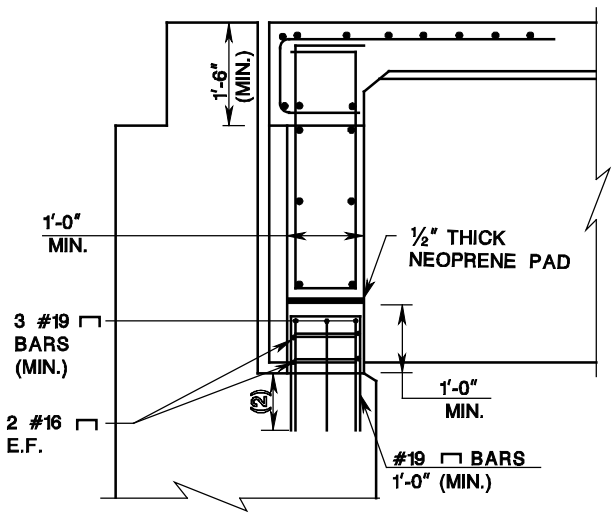

SECTION A-A

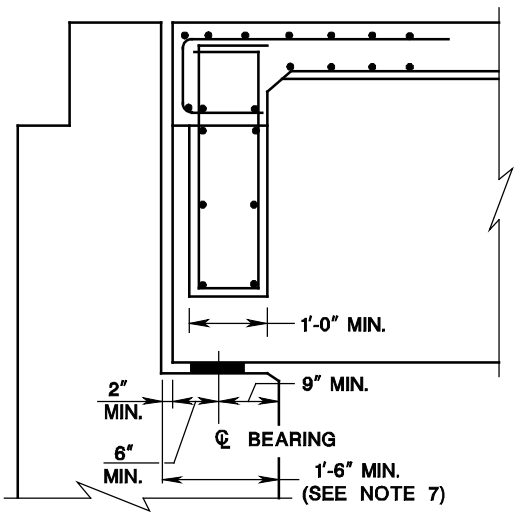

SECTION B-B

NOTES:

1. ALL REINFORCING IN END DIAPHRAGMS AND SHEAR BLOCKS SHALL BE CORROSION PROTECTED.
2. EMBEDMENT LENGTH PER DESIGN REQUIREMENTS SHALL BE SHOWN ON THE PLANS.
3. THE THICKNESS AND SIZE OF REINFORCED ELASTOMERIC BEARING PADS SHALL BE DETERMINED PER DESIGN REQUIREMENTS.
4. SHEAR BLOCKS ARE REQUIRED AS A MINIMUM BETWEEN EACH FASCIA AND THE FIRST INTERIOR BEAM. PROVIDE ADDITIONAL OR LARGER SHEAR BLOCKS AS REQUIRED FOR SEISMIC DESIGN CONSIDERATIONS AND FOR HIGHLY SKEWED STRUCTURES.
5. REFERENCE GUIDE SHEET PLATE 3.10-20 FOR OTHER NOTES AND DETAILS.
6. ALL REINFORCING STEEL, DOWELS AND DIMENSIONS SHOWN ARE MINIMUM. MODIFY DETAILS AS REQUIRED BY DESIGN.
7. SEAT LENGTH SHALL SATISFY SEISMIC DESIGN REQUIREMENTS.