CONTINUITY DESIGN FOR LIVE LOAD, PC I–BEAM KEEPER BLOCKS	ISSUED: 2009	PLATE 3.10–18

ALSO SEE PLATES
3.10-15
3.10-16
3.10-17

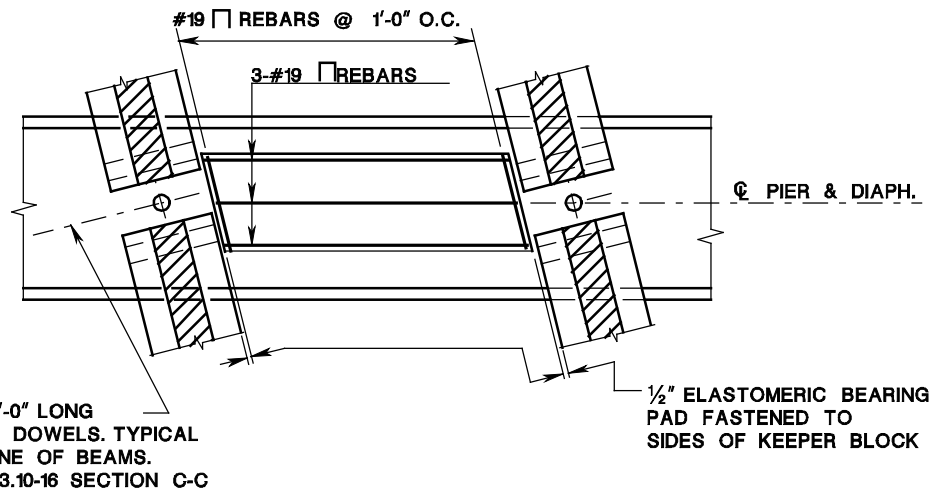

TYPICAL TOP VIEW

(DIAPHRAGMS NOT SHOWN)

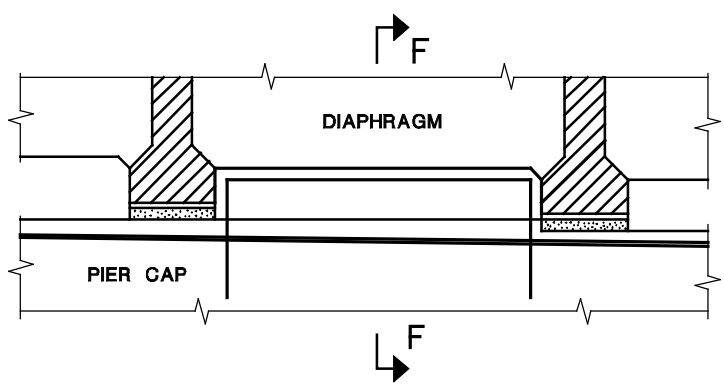

TYPICAL ELEVATION

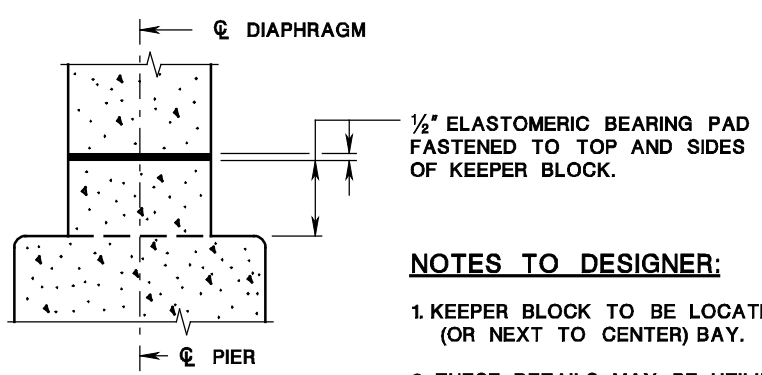

SECTION F-F

NOTES TO DESIGNER:

1. KEEPER BLOCK TO BE LOCATED IN CENTER (OR NEXT TO CENTER) BAY.

2. THESE DETAILS MAY BE UTILIZED IN THE SEISMIC RETROFIT OF APPLICABLE PROJECTS.