SECTION 2
STRUCTURES DESIGN

Table of Contents

Page No

2.1 GENERAL 1

2.2 BRIDGES 1

2.2.1 DESIGN SPECIFICATIONS 1

2.2.1.1 Design 1

2.2.1.2 Load Rating 2

2.2.1.3 Geometry 4

Shoulder Widths 4

2.2.1.4 Railroad Bridges 5

2.2.1.5 Local and State Highway Bridges 5

2.2.2 MODIFICATIONS TO CURRENT CODES 5

2.2.3 MATERIALS 10

2.2.3.1 Structural Steel 10

2.2.3.2 Concrete 11

2.2.3.3 Reinforcement Steel 12

2.2.4 SUPERSTRUCTURE DESIGN 12

2.2.4.1 Stringers and Beams 12

2.2.4.2 Deck Slabs 16

2.2.4.3 Bearings 25

2.2.5 SUBSTRUCTURE DESIGN 27

2.2.5.1 Piers 27

2.2.5.2 Abutments 28

2.2.5.3 Scour Design 30

2.2.6 DESIGN FOR SEISMIC EVENTS 31

2.2.6.1 Design Specifications 31

2.2.6.2 General Considerations 31

2.2.6.3 Retrofit Specific Requirements 33

2.2.7 COMPUTER SOFTWARE (FOR DESIGN PURPOSES ONLY – SEE SECTION 2.4 OF THE NJTA LOAD RATING MANUAL FOR LOAD RATING COMPUTER SOFTWARE REQUIREMENTS) 34

2.2.7.1 Guidelines on Use 34

2.2.7.2 Commercial Structural Programs 35

2.2.8 PERMITS 37

2.3 RETAINING WALLS 37

2.3.1 EARTH RETAINING STRUCTURES 37

2.3.2 ALTERNATE / PROPRIETARY RETAINING WALLS 39

2.4 CULVERTS 43
2.5 SIGN SUPPORTS 44
2.5.1 GENERAL DESIGN CRITERIA 44
2.5.2 OVERHEAD SIGN STRUCTURE DESIGN 50
2.6 LIGHTING 55
2.7 NOISE BARRIERS 56
2.7.1 PRELIMINARY CONSIDERATIONS 56
2.7.2 DESIGN CRITERIA 56
2.7.3 LOAD COMBINATIONS 57
2.7.4 FUNCTIONAL REQUIREMENTS: 58
2.7.5 MAINTENANCE CONSIDERATIONS: 59
2.7.6 NOISE BARRIERS ON BRIDGES: 60
2.7.7 TYPES OF BARRIERS 61
2.7.8 MATERIALS 61
2.7.9 FOUNDATION DESIGN 62
2.8 BRIDGE REPAIR CONTRACTS 63
2.8.1 FORMAT AND CONTENT 63
2.8.2 DECK REPLACEMENT CONTRACTS 65
2.8.2.1 Details and Design 65
2.8.2.2 Traffic Protection 66
2.8.2.3 Repair of Spalls 68
2.8.2.4 Pay Items and Quantities 70
2.8.3 MISCELLANEOUS STRUCTURAL REPAIR CONTRACTS 71
2.8.3.1 Traffic Protection 72
2.8.3.2 Pay items and Quantities 72
2.8.4 DRAINAGE MODIFICATIONS CONTRACTS 74
2.8.4.1 Pay Items and Quantities 74
REFERENCES 74

List of Exhibits

Page No

Exhibit 2 - 1 One Course Bridge Deck Slabs 16
Exhibit 2 - 2 Two Course Bridge Deck Slabs 18
Exhibit 2 - 3 Reconstruction of Surfaced Decks (Surfacing 2 inches thick or less) 20
Exhibit 2 - 4 Reconstruction of Surfaced Decks (Surfacing up to 4 inches thick) 21
Exhibit 2 - 5 Reconstruction of Surfaced Decks (Surfacing up to 6 inches thick) 22
Exhibit 2 - 6 Reconstruction of Bare Concrete Decks 23
SERIES 100 – BRIDGE DECK GEOMETRY 76
Exhibit 2 - 100 Turnpike Bridge Deck Geometry Mainline – 1 76
Exhibit 2 - 101 Turnpike Bridge Deck Geometry Mainline – 2 77
Exhibit 2 - 102 Turnpike Bridge Deck Geometry Mainline – 3 78
Exhibit 2 - 103 Turnpike Bridge Deck Geometry Ramps – 1 79
Exhibit 2 - 104 Turnpike Bridge Deck Geometry Ramps – 2 80
Exhibit 2 - 105 Turnpike Bridge Deck Geometry Ramps – 3 81
Exhibit 2 - 106 Turnpike Bridge Deck Geometry Ramps – 4 82
Exhibit 2 - 107 Turnpike Bridge Deck Geometry Ramps – 5 83
Exhibit 2 - 108 Parkway Bridge Deck Geometry Mainline – 1 84
Exhibit 2 - 109 Parkway Bridge Deck Geometry Mainline – 2 85
Exhibit 2 - 110 Parkway Bridge Deck Geometry Mainline – 3 86
Exhibit 2 - 111 Parkway Bridge Deck Geometry Ramps – 1 87
SERIES 200 – SUBSTRUCTURE DETAILS 88
*Exhibit 2 - 200 Substructure Details – 1 88
Exhibit 2 - 201 Substructure Details – 2 89
Exhibit 2 - 202 Substructure Details – 3 90
Exhibit 2 - 203 Substructure Details – 4 91
Exhibit 2 - 204 Substructure Details – 5 92
Exhibit 2 - 205 Substructure Details – 6 93
Exhibit 2 - 206 Substructure Details – 7 94
Exhibit 2 - 207 Substructure Details – 8 95
Exhibit 2 - 208 Substructure Details – 9 96
Exhibit 2 - 209 Substructure Details – 10 97
Exhibit 2 - 210 Substructure Details – 11 98
Exhibit 2 - 211 Substructure Details – 12 99

Exhibit 2 - 212 Substructure Details – 13 100
Exhibit 2 - 213 Substructure Details – 14 101
Exhibit 2 - 214 Substructure Details – 15 102
SERIES 300 – SUPERSTRUCTURE DETAILS 103
Exhibit 2 - 300 Superstructure Details – 1 103
Exhibit 2 - 301 Superstructure Details – 2 104
Exhibit 2 - 302 Superstructure Details – 3 105
Exhibit 2 - 303 Superstructure Details – 4 106
SERIES 400 – SIGN STRUCTURES 107
Exhibit 2 - 400 Parkway Ground Mounted Signs – 1 107
Exhibit 2 - 401 Parkway Ground Mounted Signs – 2 108
Exhibit 2 - 402 Parkway Ground Mounted Signs – 3 109
Exhibit 2 - 403 Parkway Ground Mounted Signs – 4 110
Exhibit 2 - 404 Overhead Sign Structures Notes 111
Exhibit 2 - 405 Turnpike Overhead Sign Structures – 1 112
Exhibit 2 - 406 Turnpike Overhead Sign Structures – 2 113
Exhibit 2 – 407 Turnpike Overhead Sign Structures – 3 114
Exhibit 2 - 408 Turnpike Overhead Sign Structures – 4 115
Exhibit 2 - 409 Parkway Overhead Sign Structures – 1 116
Exhibit 2 - 410 Parkway Overhead Sign Structures – 2 117
Exhibit 2 - 411 Parkway Overhead Sign Structures – 3 118
Exhibit 2 - 412 Parkway Overhead Sign Structures – 4 119
Exhibit 2 – 413 Anti-Snag Nosing Details – 1 120
Exhibit 2 - 414 Anti-Snag Nosing Details – 2 121
SERIES 500 – PROPRIETARY WALL SERIES 122
Exhibit 2 - 500 Proprietary Retaining Wall Details – 1 122
Exhibit 2 - 501 Proprietary Retaining Wall Details – 2 123
Exhibit 2 - 502 Proprietary Retaining Wall Details – 3 124
Exhibit 2 - 503 Proprietary Retaining Wall Details – 4 125
Exhibit 2 - 504 Proprietary Retaining Wall Details – 5 126
Exhibit 2 - 505 Proprietary Retaining Wall Details – 6 127

SECTION 2
STRUCTURES DESIGN

2.1 GENERAL

This Section of the Authorities Design Manual provides guidance, policies, standard practice and procedures for the development of bridge and/or structure projects. One of the primary goals of this Section is to provide assistance to Engineers to ensure that bridges constructed for the Authority are highly durable and economical. Although this Section provides guidance on design procedure, it does not preclude the need for a complete analysis and design to produce a safe, economical and maintainable structure.

2.2 BRIDGES

2.2.1 Design Specifications

2.2.1.1 Design

Except as modified below, the design of all highway bridges shall be governed by the latest edition of the American Association of State Highway and Transportation Officials (AASHTO) LRFD Bridge Design Specifications and all current Interim Specifications issued by the Association (referred to as the AASHTO LRFD Specification).

The AASHTO LRFD bridge design philosophy dictates that bridges are designed for specified limit states to achieve constructability, safety and serviceability goals, while still achieving desired economy, aesthetics and inspectability. The four main limit states are as follows:

1. Service Limit State
2. Fatigue and Fracture Limit State
3. Strength Limit State
4. Extreme Event Limit States

In general terms, bridges designed to the AASHTO LRFD Specifications are not supposed to be specifically weaker or stronger than those designed using the AASHTO Standard Specifications for Highway Bridges, but should provide more uniform levels of safety. The strength limit states were calibrated based upon theories of structural reliability. The other limit states, however, were calibrated based on past and current practices.

The Service Limit State limits stresses, deformations and crack widths under normal service conditions.

The Fatigue and Fracture Limit State limits the allowable fatigue stress range for anticipated stress cycles to control crack initiation and propagation and to prevent fracture during the design life of the bridge.

The Strength Limit State ensures the bridge has the appropriate strength and stability required to maintain its structural integrity under the load combinations that it is expected to experience during its design life.

The Extreme Event Limit States ensure that the bridge is proportioned to resist collapse due to unique occurrences such as earthquake, vessel collision, flood etc.

The following basic equation is the basis of LRFD methodology and must be satisfied for each Limit State:

$\eta \sum \gamma_i Q_i \leq \phi R_n = R_r$ Where $\eta = \eta_D \eta_R \eta_I \geq 0.95$
(AASHTO LRFD Eq.1.3.2.1-1)

η = A factor relating to ductility, redundancy and operational importance.
η_R = A factor relating to redundancy
η_D = A factor relating to ductility
η_I = A factor relating to operational importance
γ_i = Load factor: A statistically based multiplier
ϕ = Resistance Factor: A statistically based multiplier
Q_i = Force Effect
R_n = Nominal Resistance
R_r = Factored Resistance: ϕR_n

As stated in the AASHTO LRFD Specification commentary C1.3.2.1, “Ductility, redundancy and operational importance are significant aspects affecting the margin of safety of bridges. Whereas the first two directly relate to physical strength, the last concerns the consequences of the bridge being out of service.” As a result, a structural system designed using LRFD should:

- Be proportioned to ensure the development of significant inelastic deformations prior to failure for ductility.
- Use multiple-load-path and continuous structures for redundancy.
- Establish the importance of the structure with regards to its social, survival and security requirements.

2.2.1.2 Load Rating

General

Load ratings are required for all new and replacement bridges, and for all rehabilitation and repair designs involving a substantial structural alteration. LRFR load rating calculations shall be performed as part of the design process and reflect the bridge as-built or as-rehabilitated condition, as appropriate. Load

rating procedures and methodologies shall be in accordance with the below provisions.

Superstructures
Evaluation of superstructures that were designed utilizing the AASHTO LRFD Bridge Design Specifications, as well as bridge superstructures that were designed utilizing the AASHTO Standard Specifications for Highway Bridges shall be performed using LRFR methodology in accordance with the provisions of the NJTA Load Rating Manual.

Substructures
Members of substructures need not be routinely checked for load capacity except in situations where there is reason to believe that their capacity may govern the capacity of the overall structure, such as visual evidence of distress, poor member condition or when they are to be altered as a part of the project scope of work as noted below.

Existing substructure members originally designed utilizing the AASHTO Standard Specifications for Highway Bridges which are to be altered as a part of the project scope of work shall be analyzed via LFD methods. Alterations may include, but are not limited to; increased dead load placed upon the member, geometric modification to the member, or revised/widened framing of the superstructure. Substructure member analysis shall consider both Inventory and Operating levels. Substructure members with an Operating load rating of less than 45 Tons (HS25) shall be further investigated for retrofit, strengthening, or replacement strategies. For substructures where retrofit, strengthening, or partial replacement is deemed practical, designs shall be in accordance with the AASHTO Standard Specifications for Highway Bridges. All retrofits shall be designed to achieve an Inventory load rating of 36 Tons, minimum. Where substructures require complete replacement, the design shall be in accordance with the current edition of the AASHTO LRFD Bridge Design Specifications.

Where existing substructure members are anticipated to be checked for load capacity due to deterioration or signs of distress, these members and associated justification shall be presented in the Phase A report for Authority concurrence prior to advancement of any analysis or design.

Publication and Deliverables
The Design Engineer shall submit, as a part of the Phase C submission, the complete load rating analysis for all new and replacement bridges, and for all rehabilitation and repair designs involving substantial structural alterations as defined above. When ratings are performed in conjunction with the preparation of design drawings, the load rating results for all investigated live load models (HS-20, HS-25 and/or HL93, and NJTA Legal

Loads) shall be shown on the structural drawings following the structural notes. Live load distribution factors used in the design and rating of structures shall also be noted on the structural drawings.

The load rating summary form, as shown in Section 4.2 of the NJTA Load Rating Manual, shall be used but may be modified as necessary.

The Load Rating Summary Sheet and the electronic input file for use in future re-analysis shall be created by the Design Engineer and provided to the Authority in accordance with the requirements of Section 2.4 of the NJTA Load Rating Manual. Also refer to Section 2.4 of the NJTA Load Rating Manual for direction regarding usage of acceptable load rating programs.

2.2.1.3 Geometry

Shoulder Widths

Shoulder widths shall be established as shown in the Exhibits at the end of this section. It is desirable for the shoulder widths on a structure to match the shoulder widths of the approaching roadway. However, under certain conditions, it may be appropriate for shoulder widths on a structure to be different than the approach roadways.

Shoulder widths for structures which carry both directions of travel on a common deck shall match the shoulder widths of the approaching roadway.

Shoulder widths for bifurcated structures which carry each direction of travel on physically separate bridge decks, and are less than 200 ft in overall length, shall match the shoulder widths of the approaching roadway. For bifurcated structures 200 ft or greater in overall length where the approach roadway utilizes shoulder widths greater than the minimum required, an evaluation should be performed to determine if a reduction in the left shoulder width is warranted. This evaluation, at a minimum, consists of the following:

> A cost analysis consisting of a breakdown of the savings associated with utilizing a minimum left shoulder width rather than the approach roadway left shoulder width. This analysis should be based on estimated materials unit cost. Gross bridge square footage costs should not be used for this analysis as they are not considered to be reliable in this application.

The use of a minimum width shoulder will not exempt the designer from considering future bridge re-decking efforts as per Section 2.2.4.1. Future re-decking of the structure may require the use of wider than minimum shoulders in order to maintain all lanes of traffic during deck replacement or rehabilitation operations.

In the event that the shoulder widths on the structure are less than the shoulder widths on the approach roadway, the approach roadway shall be tapered such that it is tangent a minimum of 100 ft from the begin/ end bridge stations. This will allow the structure cross-section to be considered as matching the approach roadway section, effectively preventing the structure from being categorized as "functionally obsolete" in the NBIS bridge rating system. Refer to Sections 1A and 1B for guidelines on tapering the approach roadway.

2.2.1.4 Railroad Bridges

Bridges constructed to carry railways shall conform to the latest edition of the Manual for Railway Engineering published by the American Railway
Engineering and Maintenance-of-Way Association (AREMA), subject to the requirements of the railroad concerned.

2.2.1.5 Local and State Highway Bridges

For local roads and State highways over Authority facilities, the jurisdiction for structural maintenance shall be confirmed during Phase A. For local roads and State highways that fall under the Authority's maintenance jurisdiction, the Authority's Design Manual shall be followed for the bridges structural integrity. The geometric requirements for these local and State Highways shall conform to the requirements of the applicable agencies. For local roads and State highways that fall under the maintenance jurisdiction of other agencies, the current design standards of the applicable agencies shall be followed.

2.2.2 Modifications to Current Codes

The following modifications to the current AASHTO LRFD Bridge Design Specifications shall apply:

1.3.5 Operational Importance (AASHTO)

The Operational Importance strength limit state shall classify all Turnpike and Parkway mainline and ramp bridges as "important", therefore: $\eta_I = 1.05$.

2.3.3 Clearances (AASHTO)

The minimum vertical clearance over the full width of roadways and shoulders of any roadway carrying Turnpike and Parkway traffic shall be 15 feet to the lowest projection of any structure. The minimum vertical clearance for bridge reconstruction projects shall be 15 feet or the existing vertical clearance, whichever is greater.

2.5.2.4 Rideability (AASHTO)

The top ½ inch of the concrete deck slab thickness shall be considered as dead load only and shall not be considered effective in carrying secondary dead loads, live load or impact.

2.5.2.6.2 Criteria for Deflection (AASHTO)

The following principles shall apply to deflections:

- When investigating the maximum absolute deflection in tangent bridges, all design lanes should be loaded and all supporting components should be assumed to deflect equally.
- When investigating the maximum absolute deflection in bridges with horizontally curved girders, all design lanes should be loaded and supporting components will deflect unequally. The deflection limit is applied to each individual girder.
- The live load portion of Load Combination Service I of Table 3.4.1-1 should be used, including the dynamic load allowance, IM
- The live load shall be taken from Article 3.6.1.3.1
- The provisions of Article 3.6.1.1.2 shall apply.

Deflections of all Turnpike and Parkway bridges shall conform to the following:

- Vehicular load, general.....Span / 1000
- Vehicular and/or pedestrian loads .....Span / 1000
- Vehicular load on cantilever arms .....Span / 400
- Vehicular and/or pedestrian loads on cantilever arms.....Span / 400

The following additional criteria shall also be followed:

1. The gross composite section properties in both the negative and positive moment regions of the span shall be used when calculating live load deflections (i.e. uncracked deck slab in negative moment region).
2. The span length shall be defined as the distance between supports.
3. For the design of continuous beams, the total deflection range shall be limited to Span / 800 to limit the “reversal” or “upward” deflection due to live loading in other spans.

The deflections of bridges carrying State Highways shall be checked in accordance with the current policy of the New Jersey Department of Transportation.

3.5.1 Dead Loads: DC, DW and EV (AASHTO)

No additional dead load allowance for a future wearing surface shall be applied to new bridges with bare concrete deck construction.

The dead load for bridges with new or replacement reinforced concrete deck slabs supported by stringers shall include 13-psf applied over the deck slab soffit between stringers to provide for the weight of corrugated metal deck forms and the additional concrete in the form corrugations where the corrugations match the deck primary reinforcing bar spacing. Refer to Section 2.2.4.2 for additional deal load requirements where corrugations do not match the bar spacing.

3.6 Live Loads (AASHTO) ***(Except for the design of Modular Bridge Expansion Joints)***

The highway design live load to be used for all new bridges and for new members in modifications to existing bridges shall be HL-93. Wherever a wheel load is specified, a 20 Kip wheel shall be used.

In addition to the HL-93 analysis, a strength II limit state calculation shall be made for the following New Jersey Department of Transportation (NJDOT) permit vehicle configuration:

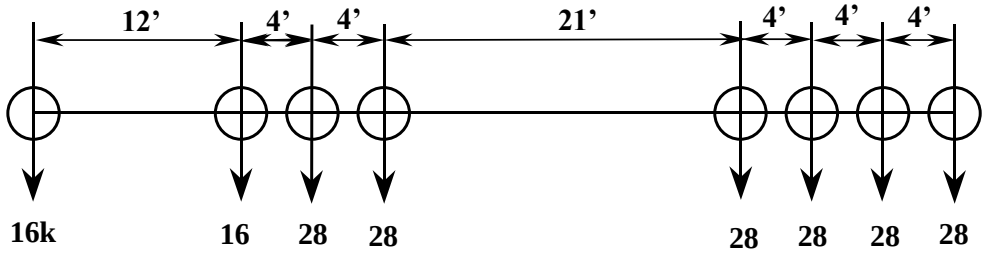

LRFD Permit Vehicle, NJDOT (200 Kips)

The permit vehicle shall occupy one design lane with all remaining design lanes occupied by the HL-93 design vehicle.

Where the loading of existing members is altered by dead load or geometric modifications, the capacity of the member to carry HL-93 live loadings shall be checked in accordance with the LRFR provisions of the NJTA Load Rating Manual. The LRFR design load rating is a first-level assessment of bridges based on the HL-93 loading and LRFD design standards. Existing bridge members that have sufficient capacity for HL-93 live load at the Operating Level will have satisfactory load ratings for NJTA legal loads. If the strength rating for HL-93 at the Operating Level is less than 1.0, then the member shall be strengthened to provide a RF = 1.0 for HL-93 at the Inventory Level for all applicable strength and service limit states.

3.6.5 Vehicular Collision Force: CT (AASHTO)

3.6.5.2 Vehicle and Railway Collision with Structures

The first paragraph is changed to:

Unless protected as specified in Article 3.6.5.1., piers located within the clear zone as defined in Section 3.2.1 of the Design Manual shall be designed for an equivalent static force of 200 kips. For the purposes of pier design to resist vehicular collision only, the clear zone shall not be less than 30 feet. ***Pier columns that fall within the 30' clear zone***

shall have the designed seismic confinement reinforcement extend the full height of the column.

Abutments and piers located within a distance of 25 feet to the centerline of a railroad track shall be designed for an equivalent static force of 400 kips or shall be protected by a structurally independent crash wall or embankment that extends not less than 7 feet above the top of rail. This will provide an allowance of 1 foot for future ballasting of the railroad tracks and for potential encroachment during construction or maintenance operations.

The equivalent static force shall be assumed to act from a point that is offset by 15 degrees from the centerline of the tracks or from the edge of roadway. The force shall be taken in a horizontal plane at a distance of 4 feet above the ground.

3.11 Earth Pressure: EH, ES, LS and DD (AASHTO)

Earth pressure on structures retaining compacted fills shall be assumed to be the forces from a backfill of cohesion-less soil with a unit weight of 120 pounds per cubic foot with an angle of internal friction of approximately 33 degrees. Where structures retain cut soil faces, the value of the unit weight, cohesion and angle of internal friction shall be determined from borings, but in no case shall the forces used for design be less than those given above for fills. If a structure is prevented from deflecting freely at the top, the computed earth pressure forces shall be based on at-rest earth pressure in accordance with AASHTO LRFD Section 3.11.5.2, but in no case shall this value be less than 50 percent greater than the active earth pressure. This condition may occur in concrete rigid frame bridges, culverts and U-type abutments.

In the design of earth retaining structures, lateral earth pressures are computed either by the Rankine Method, which uses the Plastic Equilibrium Theory, or by the Coulomb Method, which uses the Wedge Theory. In both cases, the soil is considered to be at the point of incipient failure. The Coulomb method shall be used if the soil is predominantly granular, otherwise the Rankine method shall be used.

3.10 Earthquake Effects: EQ (AASHTO)

This section shall not be considered in the design of new structures or the rehabilitation of existing structures. Refer to Subsection 2.2.6 for seismic design and retrofit criteria.

3.12 Force Effects Due to Superimposed Deformations

Design thermal force effects, deformations, and displacements shall be determined as per the AASHTO LRFD Bridge Design Specifications, current ed., Subsection 3.12 using Procedure A for Moderate Climate conditions. The load factor for all thermal force effects, deformations, and displacements shall be 1.20 for all applicable limit states. When considering thermal force effects between substructures and superstructures, only the gross moment of inertia

of concrete columns or piers shall be considered unless a more detailed analysis is performed to verify that the partially cracked moment of inertia can be mobilized.

Forces from thermal effects, such as superstructure expansion between adjacent fixed piers, can cause large moments on pier elements. These moments are carried by the un-cracked gross moment of inertia of the concrete element until internal stress in the bare concrete exceeds the modulus of rupture (fr). After the stresses exceed this limit, the partially cracked moment of inertia may be used for stiffness and thermal force effect computation. The partially cracked moment of inertia may be conservatively assumed at 50% of the gross moment of inertia unless a more detailed analysis is performed. Before a partially cracked moment of inertia may be utilized for design, the designer shall verify that thermal force effects are adequate to exceed the modulus of rupture in the gross moment of inertia of the pier or column.

4.6.2.2 Beam-Slab Bridges (AASHTO)

Replace the 11th paragraph of Article 4.6.2.2.1-Application (Where bridges meet the conditions specified) with the following:

The dead load considered as supported by the outside roadway stringer or beam shall be that portion of the floor slab from the fascia to the centerline between the outside stringer and the first interior stringer. Curbs, parapets, railings, sidewalks, and safetywalks, if placed after the slab has cured, shall be divided between the outside three roadway stringers in the ratio of 50 percent to the outside stringer, 35 percent to the first interior stringer and 15 percent to the second interior stringer. This distribution ratio is not applicable to noise barrier mounted to superstructures and reference is made to Subsection 2.7 for further guidance. Where there is an open joint in the median, the dead load of the median barrier or raised median shall be distributed in the same manner as for fascia stringers. Where the deck slab is continuous through the median, the dead load of median dividers or barriers shall be apportioned between the stringers assuming the slab to act as a simple span between stringers. Wearing surface shall be considered to be carried by the stringer or beam carrying the slab on which it is laid.

5.4.2.3.2 Creep (AASHTO)

The average annual ambient relative humidity shall be taken as 70%.

5.4.4 Prestressing Steel (AASHTO)

The following is added:

Low relaxation strands shall be used and accounted for in the design of prestressed concrete beams.

5.9.4.2.2 Tension Stresses (AASHTO)

Article 5.9.4.2.2 shall be replaced by the following:

For service load combinations that involve traffic loading, tension stresses in members with bonded or unbonded prestressing tendons should be investigated using Load Combination Service III and the tension in the precompressed tensile zone shall be zero. Stress Limit limitations stated in AASHTO LRFD Specification Table 5.9.4.2.2-1 shall be accounted for in the permit vehicle check.

5.12.3 Concrete Cover (AASHTO)

Article 5.12.3 shall be replaced by the following:

The minimum clear cover for all reinforcement shall be two inches except as given below:

1. Concrete permanently in contact with earth: 3 inches
2. Concrete exposed to salt or brackish water:
   Piers and abutments: 4 inches
   Walls and culverts: 3 inches
3. Concrete in piers and abutments exposed to flowing water other than the above: 3 inches
4. Concrete deck slabs:
   Top Reinforcement: See Section 2.2.4.2
   Bottom Reinforcement: 1 inch

In piled foundations, reinforcement or supports for reinforcement shall be positioned a minimum of three inches clear from the piles.

6.4.1 Structural Steels (AASHTO)

See Subsection 2.2.3.1 for additional information.

6.7.2 Dead Load Camber (AASHTO)

In computing cambers, the weight of the concrete deck slab shall include the permanent metal deck forms and the concrete contained in the forms.

In determining cambers in bridges containing overlays, the weight of the overlay shall be taken as a superimposed dead load in computing deflections of the steel section acting compositely with the first course concrete slab.

Steelwork shall be cambered to compensate for the weight of utilities. The utility dead load shall be taken by the steel section only.

These instructions shall apply unless it is known that the construction method will be such as to make them inappropriate.

2.2.3 Materials

2.2.3.1 Structural Steel

Structural steel shall comply with AASHTO M270, Grade 50W (ASTM A709, Grade 50W) unless otherwise approved by the Authority's

Engineering Department. Hybrid designs incorporating Grade HPS70W, in bottom flanges and negative moment top flanges with conventional Grade 50W Steel in positive moment top flanges and all webs, should be evaluated on a case by case basis to economize structural steel designs.

All structural steel within a distance of 1½ times the depth of girder from a bridge joint shall be painted. No other steel requires painting, but the exterior surfaces of fascia stringers, including the underside of the bottom flange, shall be blast cleaned in accordance with SSPC 10.

2.2.3.2 Concrete

Wherever precast elements are specified for use, they shall be Class P Concrete with strength requirements as noted below for concrete in prestressed slabs, box beems and girders. Concrete for use in deck slabs**,** headblocks, cast-in-place parapets, and unsurfaced approach slabs for new bridges, widenings and major deck reconstruction shall be High Performance Concrete (HPC) with a minimum compressive strength (f'c) of 4,400 psi unless otherwise directed by the Authority's Engineering Department. The concrete strength for design using HPC shall be 4,000 psi. In situations where small concrete quantities are required for barrier parapet, Class A concrete with concrete penetrating sealer may be used in lieu of high performance concrete with the approval of the Authority Project Engineer.

Concrete for use in precast prestressed slabs, box beams and girders shall be Class P and shall have a minimum compressive strength at 28 days of 5,000 psi. The required minimum concrete compressive strength at the time of application of the prestress force (f'_{ci}) shall be computed and shown on the plans to the nearest 100 psi and shall not normally be less than 0.8 (f'_c).

Concrete Class A, with a minimum compressive strength at 28 days (f'_c) of 4,500 psi, shall be used for median barriers, cast-in-place concrete bearing piles and all precast concrete except prestressed precast concrete.

Concrete Class B, with a minimum compressive strength (f'_c) of 4,000 psi, shall be used for deck slab rehabilitations, surfaced approach slabs, safetywalks, sidewalks, culverts and for all pier elements.

Concrete Class C, with a minimum compressive strength (f'_c) of 3,500 psi, shall be used for all cast-in-place walls, abutments and footings.

Concrete Class SCC, with a minimum compressive strength equal to Concrete Class A, shall be considered for drilled shaft foundations when the following conditions exist:

- Very long and / or large diameter shafts
- Reinforcing requirements dictate crowded reinforcement configurations

- Concrete hold times are excessive due to difficult access or long duration pours
- Other conditions that, in the opinion of the Engineer, may necessitate the use of Concrete Class SCC

The value of the concrete strength (f'_c) to be used for the design of reinforced concrete using Class A, B or C concrete shall be 500 psi less than the specified minimum compressive strength except for ***items*** using high performance concrete.

2.2.3.3 Reinforcement Steel

Reinforcement steel shall conform to the requirements of ASTM Designation A615, Grade 60 plain carbon steel. Low-alloy, low-carbon steel conforming to the requirements of ASTM Designation A706, Grade 60, may be substituted in situations where welding is employed to expedite the assembly of reinforcement cages. See Subsection 2.2.4.2 for reinforcement requirements on Deck Slabs.

Reinforcement steel conforming to the requirements of ASTM Designation A615 shall not be welded. Additionally, welding of intersecting bars shall not be permitted in deck slabs.

2.2.4 Superstructure Design

2.2.4.1 Stringers and Beams

1. General
   Continuous superstructures should be used whenever foundation conditions and structure layout permit. The most important considerations in this choice are the reduction in the number of deck joints, economy and the possible reduction in structure depth. The effects of differential settlement shall be included in the design. When the settlement cannot be reliably predicted, consideration should be given to the use of pile foundations.

   The spacing of stringers shall be set so that future deck replacements may be made while traffic is maintained for the full number of lanes on the bridge. The deck replacement shall be assumed to be in any single bay between stringer centerlines, and provisions shall be made for construction barrier to protect the work area from traffic. In this condition, the full shoulder areas may be used for traffic and no shoulders need be maintained through the construction zone.

2. Composite Construction
   Steel or precast prestressed concrete beams with a concrete deck slab shall normally be designed as composite structures, assuming that no temporary supports will be provided for the beams or girder during the placement of the permanent dead load.

   Shear connectors for steel stringers shall be end-welded studs, $^7/_8$" diameter. Stud heights are dependent on concrete haunch

dimensions. Studs shall extend at least 2 inches above the bottom mat of deck slab reinforcement, but the stud head shall be at least 3 inches below the top of slab. Whenever possible, use of the same height stud on any one bridge is preferred.

In continuous spans, the positive and negative moment areas shall be designed with composite sections. Shear connectors shall still be provided through the negative moment areas at a nominal pitch not to exceed 24 inches.

3. Curved Stringers
   In general, outer stringers shall be curved in plan to match the curvature of the bridge fascia unless the mid-ordinate of the curve is so small that the curvature can be accommodated within the normal slab overhang and the resulting appearance of the fascia is not aesthetically objectionable.

4. Intermediate Stiffeners and Connection Plates
   Transverse intermediate stiffeners for welded plate girders preferably shall be single plates fastened to one side of the web plate only. They shall not be placed on the exposed face of exterior beams. Vertical connection plates shall be rigidly connected to the web and both tension and compression flanges. Ordinarily, the attachment shall be by fillet welding along each edge of the connection plate.

5. Welded Details
   Certain miscellaneous details - supports for screed rails and reinforcement, steel deck forms, connection plates, gussets, etc. - shall normally not be welded to members or parts subject to tensile stress. At locations where welding cannot be avoided, the maximum live load stress range at the point of attachment shall be checked in accordance with AASHTO LRFD Specification Section 6.6. The plans shall show clearly the flange areas where no welding is permitted.

   Fillet weld sizes as required by design shall be shown on the plans.

6. Splices
   For span lengths between 120 ft and 150 ft, an optional field splice shall be permitted, preferably located between the 1/3 and outer ¼ points of the span (near dead load contraflexure points for continuous spans). For spans in excess of 150 ft, optional field splices shall be located between each of the 1/3 and outer ¼ points.

   When an optional field splice is shown on the plans, provisions for it shall be made in the design by increasing the haunch and underclearance to accommodate the splice plates and bolt heads. Additionally, splice locations should be consistent with flange thickness transitions to minimize butt weld requirements.

The Contractor should be given freedom to omit a splice and transport the member in fewer pieces. The Contractor may submit alternative designs or locations for the splices, at no extra cost, to the Authority's Engineering Department, subject to the approval of the engineer, however, the Contractor should not be permitted to introduce a field splice unless absolutely necessary.

Field splice locations shall also consider the impacts of the erection process to construction staging and the maintenance and protection of traffic. Splices shall preferably be located within designated work zones so as to minimize lane shut downs.

Splices and connections shall be designed and the details and locations shown on the plans. Field splices shall be designed and detailed with ASTM A325 high-strength bolts.

7. End Diaphragms
End diaphragms and their connections shall be designed for the effect of dead loads and wheel loads which they may be required to support, for the effect of transverse movement due to thermal, wind or seismic forces and for jacking loads, to include full dead and live loads, required for future bearing replacement. The diaphragms and their connections shall be designed to resist the forces listed above in appropriate combinations. Consideration for jack placement(s) shall be made in the diaphragm designs.

Diaphragms situated directly adjacent to abutment backwalls, other diaphragms or obstructions shall be designed with provisions for inspection and future painting access. At a minimum, the following criteria shall be met for end diaphragms:

- Open frame configurations are preferred
- At plate girder end diaphragms, reinforced access openings (port holes) shall be provided in the diaphragm webs. The port hole shall be minimum 18" wide x 24" high and be proportioned so that no portion of the diaphragm or connected girders are more than 36" beyond the rim of the port hole opening.
- Plate girder end diaphragms, including flanges and stiffeners, shall provide a minimum clearance of 12" between abutment backwalls or adjacent end diaphragms.
- Where the aforementioned access opening (port hole) is not possible due to design or geometric considerations, minimum clearances of 18" and 24" shall be maintained to the abutment backwalls and adjacent end diaphragms, respectively; and a preferred 24" high x 30" wide (minimum 18" high x 24" wide) opening shall be provided between the bottoms of the diaphragms and bearing seat areas.

8. Depth of Stringers
Stringers, beams and girders shall generally be of uniform depth for the full length of the structure, except where changes in depth

are absolutely necessary to meet underclearance requirements or where a change in depth is desirable to enhance the appearance of the structure. Changes in depth shall not normally be made in structures with varying spans. Interior stringers shall be made the same depth as the fascia stringer.

9. Economics of Beam and Stringer Design
   In the design of welded plate girders, consideration shall be given to minimizing fabrication cost by reducing the number of intermediate stiffeners and eliminating flange plate cutoffs. The use of a fully-stiffened web of the minimum permissible thickness is not normally the most economical solution, and greater economy can be achieved with a thicker web and a lesser number of stiffeners. For shallow beams, the use of an unstiffened web may be economical. In the case of a flange plate cutoff, the cost of the butt-welded splice must be carefully assessed in relation to the weight of steel saved.

10. Flange Plate Welded Butt Splices and Thicknesses
    A welded butt splice shall not normally be made in a plate that exceeds two inches in thickness. Where a change in thickness of a flange plate is made at a splice, the thicker plate will be tapered down to the thickness of the thinner plate. In this case, the thickness of the thinner plate shall not exceed two inches. The Engineer shall ensure that plates of a thickness greater than two inches can be obtained in the lengths shown without a splice being required.

    Generally, the change in plate area made at a welded splice should be such that the area of the smaller plate is no less than 50% of the area of the larger plate. Small changes in plate area at a welded butt splice should also be avoided, as the expense of the weld can easily exceed the savings in material. Consultation with steel fabricators is recommended to determine the most economical flange plate transition limits, as changing steel market conditions often vary the economy of this operation.

    Regardless of flange plate transitions, it is preferable that the width of flanges should be constant within a single field section.

    Consideration shall also be given to minimizing the number of butt welded flange plate transitions. Plate size transitions may be located at the field splice so that butt welding requirements are either reduced or eliminated. Check the availability of plate sizes in order to determine the location of shop splices for flange plates.

11. Strip seal expansion joints are preferred and shall be used wherever practical. The maximum movement rating permissible for strip seal deck joints shall be 4 inches. Regardless of calculated thermal movements of less than 4”, all strip seal joints shall be configured to support 4” movement ratings. Strip seal

glands shall also support a 4” movement rating and be of the self cleaning type.

Where strip seal expansion joints are not practical for use and analysis indicates joint movements greater than 4 inches, modular type deck joints shall be used.

2.2.4.2 Deck Slabs

1. General
   Deck slabs shall be designed on the assumption that permanent steel bridge deck forms shall be used. The wheel load for calculating slab bending moments shall be 20,000 pounds.

   Longitudinal expansion joints shall only be provided where necessary to accommodate transverse expansion on wide structures (e.g. wider than 90 feet) and between parallel bridges. Joints shall preferably be located at the median barrier and shall be no greater than 1 inch.

   The following deck designs shall be used for all bridges that are owned and/or maintained by the Authority, as noted in Subsection 2.2.1:

   a. New Bridges, Widenings and Major Deck Reconstruction:
      One course construction shall be used, consisting of a reinforced HPC slab. Concrete cover for the top reinforcing bars shall be 2½" minimum measured from the top of the slab. Epoxy-coated bars shall be used for the top and bottom reinforcing bar mats. The design shall include 13-psf for permanent metal deck forms where corrugations match the bar spacing. Refer to Section 2.2.4.2.4 for additional dead load requirements where corrugations do not match the bar spacing. The design of these decks shall be governed by AASHTO’s LRFD Specifications using the applicable load and resistance factors specified in Chapters 3 and 9 of that manual using the “traditional method”. The designs shall be in accordance with Exhibit 2 - 1 with the specified slab thickness for each slab span held as a minimum, and the effective overhang length held as a maximum. Maximum overhang lengths detailed on bridges shall consider the installation of scuppers and drain pipes/downspouts. Drain pipes / downspouts shall not be exposed to view along the outside face of the fascia stringer.

EXHIBIT 2 - 1
ONE COURSE BRIDGE DECK SLABS

(NO NOISEWALL)

NEW BRIDGES AND MAJOR RECONSTRUCTION

SLAB SPAN (S)	MAXIMUM	1st COURSE	TRANSVERSE	ADDITIONAL	LONGITUDINAL

	EFFECTIVE OVERHANG LENGTH	SLAB THICKNESS (without an overlay)	REINFORCEMENT (TOP AND BOTTOM)	REINFORCEMENT IN OVERHANG	REINFORCEMENT IN BOTTOM
4'-0" to 5'-3"	2.50 ft	8 ½”	#5 @ 8”	#6 @ 8”	#5 @ 11”
>5'-3" to 6'-1"	2.50 ft	8 ½”	#5 @ 7”	#6 @ 7”	#5 @ 10”
>6'-1" to 6'-10"	2.75 ft	8 ½”	#5 @ 6”	#5 @ 6”	#5 @ 9”
>6'-10" to 7'-6"	3.00 ft	8 ½”	#5 @ 5 ”	#4 @ 5”	#5 @ 8”
>7'-6" to 8'-3"	3.33 ft	8 ¾”	#5 @ 5 ½”	#5 @ 5 ½”	#5 @ 8”
>8'-3" to 8'-9"	3.75 ft	9”	#5 @ 5 ½”	#5 @ 5 ½”	#5 @ 8”
>8'-9" to 9'-3"	4.00 ft	9 ¼”	#6 @ 7”	#6 @ 7”	#5 @ 7”
>9'-3" to 9'-9"	4.00 ft	9 ½”	#6 @ 7”	#5 @ 7”	#5 @ 7”
>9'-9" to 10'-6"	4.00 ft	9 ¾”	#6 @ 6”	#5 @ 6”	#5 @ 6”
>10'-6" to 11'-3"	4.00 ft	10”	#6 @ 6”	#5 @ 6”	#5 @ 6”
>11'-3" to 12'-0"	4.00 ft	10 ¼”	#6 @ 6”	#5 @ 6”	#5 @ 6”

Slab Span (S) is defined as the distance from beam centerline to beam centerline.

The Additional Reinforcement In Overhang shall be placed in between the Transverse Reinforcement.

The maximum effective overhangs in the above exhibit shall be used as practical limits when designing new or reconstructed bridge deck slabs. These values may be exceeded in situations where bridge geometry issues require greater variability in deck design, such as accommodating a curved bridge deck on tangent girders, or in situations where bridge deck reconstruction requires minor deck widening to accommodate traffic lane relocations under staged construction. The overhang length shall not exceed the limits as described in Section 9 of the AASHTO LRFD Bridge Design Specifications. Regardless of length, all deck overhangs shall be fully designed by the engineer to resist TL-5 level impact loading.

On a case-by-case basis, the Authority may request the Engineer to provide a two-course deck slab. When two-course construction is specified, it shall consist of a Class B reinforced concrete base slab and a latex modified concrete (LMC) overlay, 1¼” thick. Concrete cover for the top reinforcing bars shall be 2½" minimum measured from the top of the LMC overlay. Epoxy-coated bars shall be used for the top and bottom reinforcing bar mats. No allowance need be made for a future wearing surface; however, the design shall include 13-psf for permanent metal deck forms where corrugations match the bar spacing. The design of these decks shall be governed by AASHTO’s LRFD Specifications using the applicable load and resistance factors specified in Chapters 3 and 9 of that manual using the “traditional method”. The designs shall be in accordance with Exhibit 2 - 2 with the specified slab thickness for each slab span held as a minimum, and the effective overhang length held as a maximum. Maximum overhang lengths detailed on bridges shall consider the installation of scuppers and drain pipes / downspouts. Drain pipes /

downspouts shall not be exposed to view along the outside face of the fascia stringer.

EXHIBIT 2 - 2
TWO COURSE BRIDGE DECK SLABS

(NO NOISEWALL)

NEW BRIDGES AND MAJOR RECONSTRUCTION					
SLAB SPAN (S)	**MAXIMUM EFFECTIVE OVERHANG LENGTH**	**1st COURSE SLAB THICKNESS (without overlay)**	**TRANSVERSE REINFORCEMENT (TOP AND BOTTOM)**	**ADDITIONAL REINFORCEMENT IN OVERHANG**	**LONGITUDINAL REINFORCEMENT IN BOTTOM**
4'-0" to 6'-6"	2.50 ft.	7 ¼”	#5 @ 7”	#6 @ 7”	#5 @ 10”
>6'-6" to 7'-6"	3.00 ft	7 ¼”	#5 @ 6	#5 @ 6”	#5 @ 8”
>7'-6" to 8'-3"	3.33 ft	7 ½”	#5 @ 5 ½”	#5 @ 5 ½”	#5 @ 8”
>8'-3" to 8'-9"	3.75 ft	7 ¾”	#5 @ 5 ½”	#6 @ 5 ½”	#5 @ 8”
>8'-9" to 9'-3"	4.00 ft	8”	#5 @ 5 ½”	#6 @ 5 ½”	#5 @ 8”
>9'-3" to 9'-9"	4.00 ft	8 ¼”	#5 @ 5 ½”	#6 @ 5 ½”	#5 @ 8”
>9'-9" to 10'-6"	4.00 ft	8 ½”	#6 @ 7”	#5 @ 7”	#5 @ 7”
>10'-6" to 11'-3"	4.00 ft	8 ¾”	#6 @ 6”	#5 @ 6”	#5 @ 6”
>11'-3" to 12'-0"	4.00 ft	9”	#6 @ 5 ½”	#4 @ 5 ½”	#5 @ 6”

Slab Span (S) is defined as the distance from beam centerline to beam centerline.

The Additional Reinforcement In Overhang shall be placed in between the Transverse Reinforcement.

The maximum effective overhangs in the above exhibit shall be used as practical limits when designing new or reconstructed bridge deck slabs. These values may be exceeded in situations where bridge geometry issues require greater variability in deck design, such as accommodating a curved bridge deck on tangent girders, or in situations where bridge deck reconstruction requires minor deck widening to accommodate traffic lane relocations under staged construction. The overhang length shall not exceed the limits as described in Section 9 of the AASHTO LRFD Bridge Design Specifications. Regardless of length, all deck overhangs shall be fully designed by the engineer to resist TL-5 level impact loading.

b. Deck Repair / Replacements:
Bridges with existing surfacing
The new deck shall be surfaced to match the existing construction. However, the surfacing shall incorporate membrane waterproofing on the new concrete deck prior to reapplying the overlay surfacing in the case of an asphalt concrete overlay.

Concrete cover for the top reinforcing bars shall be 1½" minimum. Epoxy-coated reinforcing bars shall be used for both the top and bottom reinforcing bar mats. No allowance shall be made for future wearing surface in the design of these

slabs. The design loading shall include 13-psf for permanent metal deck forms where corrugations match the bar spacing. The design shall be allowable stress designs in accordance with AASHTO's Standard Specifications using the Working Stress Design method and, Exhibit 2 - 4 and Exhibit 2 - 5 provided that the thickness of surfacing does not exceed six inches. Where this thickness is exceeded, special designs shall be made. The maximum allowable compressive stress due to bending in the concrete shall be 1,200 psi, and the maximum allowable tension stress in the reinforcement steel shall be 24,000 psi.

EXHIBIT 2 - 3
RECONSTRUCTION OF SURFACED DECKS
(SURFACING 2 INCHES THICK OR LESS)

REINFORCING STEEL		MAXIMUM ALLOWABLE EFFECTIVE SLAB SPAN - FEET						
TRANSVERSE	LONGITUDINAL	8.00"	8.50"	9.00"	9.50"	10.00"	10.50"	11.00"
TOP & BOT	BOTTOM	SLAB	SLAB	SLAB	SLAB	SLAB	SLAB	SLAB
# 5 @ 9.00"	# 5 @ 13.43"	3.62	4.03	4.44	4.84	5.22	5.60	5.96
# 5 @ 8.50"	# 5 @ 12.69"	3.90	4.33	4.76	5.17	5.57	5.96	6.34
# 5 @ 8.00"	# 5 @ 11.94"	4.21	4.67	5.11	5.54	5.96	6.36	6.76
# 5 @ 7.50"	# 5 @ 11.19"	4.56	5.04	5.50	5.95	6.39	6.81	7.22
# 5 @ 7.00"	# 5 @ 10.45"	4.95	5.45	5.94	6.41	6.87	7.31	7.74
# 5 @ 6.50"	# 5 @ 9.70"	5.39	5.92	6.44	6.93	7.42	7.88	8.33
# 5 @ 6.00"	# 5 @ 8.96"	5.90	6.46	7.00	7.53	8.03	8.52	8.99
# 5 @ 5.50"	# 5 @ 8.21"	6.48	7.08	7.66	8.21	8.75	9.26	9.76
# 5 @ 5.00"	# 5 @ 7.46"	7.16	7.80	8.42	9.01	9.58	10.12	10.64
# 6 @ 9.00"	# 5 @ 9.46"	5.47	6.01	6.53	7.04	7.53	8.00	8.46
# 6 @ 8.50"	# 5 @ 8.94"	5.83	6.39	6.94	7.46	7.97	8.46	8.93
# 6 @ 8.00"	# 5 @ 8.41"	6.23	6.82	7.38	7.93	8.46	8.97	9.45
# 6 @ 7.50"	# 5 @ 7.89"	6.67	7.29	7.88	8.45	9.00	9.53	10.04
# 6 @ 7.00"	# 5 @ 7.36"	7.13	7.81	8.44	9.03	9.61	10.16	10.68
# 6 @ 6.50"	# 5 @ 6.84"	7.46	8.41	9.06	9.69	10.29	10.86	11.41
# 6 @ 6.00"	# 5 @ 6.31"	7.83	9.00	9.77	10.43	11.06	11.66	12.24
# 6 @ 5.50"	# 5 @ 5.78"	8.24	9.46	10.59	11.29	11.95	12.58	13.19
# 6 @ 5.00"	# 5 @ 5.26"	8.73	10.00	11.24	12.28	12.98	13.65	14.28

Effective Slab Span as established in accordance with Section 9.7.2.3 of AASHTO LRFD Bridge Design Specifications

EXHIBIT 2 - 4
RECONSTRUCTION OF SURFACED DECKS
(SURFACING UP TO 4 INCHES THICK)

REINFORCING STEEL		MAXIMUM ALLOWABLE EFFECTIVE SLAB SPAN - FEET						
TRANSVERSE	LONGITUDINAL	8.00"	8.50"	9.00"	9.50"	10.00"	10.50"	11.00"
TOP & BOT	BOTTOM	SLAB	SLAB	SLAB	SLAB	SLAB	SLAB	SLAB
# 5 @ 9.00"	# 5 @ 13.43"	3.58	3.98	4.38	4.77	5.14	5.51	5.86
# 5 @ 8.50"	# 5 @ 12.69"	3.85	4.28	4.69	5.09	5.48	5.86	6.23
# 5 @ 8.00"	# 5 @ 11.94"	4.16	4.60	5.03	5.45	5.86	6.25	6.63
# 5 @ 7.50"	# 5 @ 11.19"	4.49	4.96	5.41	5.85	6.27	6.69	7.08
# 5 @ 7.00"	# 5 @ 10.45"	4.87	5.36	5.84	6.30	6.74	7.17	7.58
# 5 @ 6.50"	# 5 @ 9.70"	5.30	5.82	6.32	6.80	7.27	7.72	8.15
# 5 @ 6.00"	# 5 @ 8.96"	5.79	6.34	6.87	7.38	7.87	8.34	8.79
# 5 @ 5.50"	# 5 @ 8.21"	6.36	6.94	7.50	8.03	8.55	9.05	9.53
# 5 @ 5.00"	# 5 @ 7.46"	7.02	7.64	8.23	8.80	9.35	9.88	10.38
# 6 @ 9.00"	# 5 @ 9.46"	5.38	5.90	6.41	6.90	7.38	7.83	8.28
# 6 @ 8.50"	# 5 @ 8.94"	5.73	6.28	6.80	7.31	7.80	8.28	8.73
# 6 @ 8.00"	# 5 @ 8.41"	6.12	6.68	7.23	7.76	8.27	8.77	9.24
# 6 @ 7.50"	# 5 @ 7.89"	6.54	7.14	7.71	8.26	8.80	9.31	9.80
# 6 @ 7.00"	# 5 @ 7.36"	6.99	7.65	8.25	8.82	9.38	9.91	10.42
# 6 @ 6.50"	# 5 @ 6.84"	7.30	8.22	8.85	9.45	10.03	10.59	11.12
# 6 @ 6.00"	# 5 @ 6.31"	7.66	8.79	9.53	10.17	10.78	11.36	11.91
# 6 @ 5.50"	# 5 @ 5.78"	8.06	9.23	10.32	10.99	11.63	12.24	12.82
# 6 @ 5.00"	# 5 @ 5.26"	8.53	9.75	10.94	11.94	12.61	13.25	13.87

Effective Slab Span as established in accordance with Section 9.7.2.3 of AASHTO LRFD Bridge Design Specifications

EXHIBIT 2 - 5
RECONSTRUCTION OF SURFACED DECKS
(SURFACING UP TO 6 INCHES THICK)

REINFORCING STEEL		MAXIMUM ALLOWABLE EFFECTIVE SLAB SPAN - FEET						
TRANSVERSE TOP & BOT	LONGITUDINAL BOTTOM	8.00" SLAB	8.50" SLAB	9.00" SLAB	9.50" SLAB	10.00" SLAB	10.50" SLAB	11.00" SLAB
# 5 @ 9.00"	# 5 @ 13.43"	3.54	3.93	4.32	4.70	5.07	5.42	5.77
# 5 @ 8.50"	# 5 @ 12.69"	3.80	4.22	4.62	5.02	5.40	5.77	6.12
# 5 @ 8.00"	# 5 @ 11.94"	4.10	4.54	4.96	5.37	5.76	6.15	6.52
# 5 @ 7.50"	# 5 @ 11.19"	4.43	4.89	5.33	5.75	6.17	6.57	6.95
# 5 @ 7.00"	# 5 @ 10.45"	4.80	5.28	5.74	6.19	6.62	7.04	7.44
# 5 @ 6.50"	# 5 @ 9.70"	5.22	5.72	6.21	6.68	7.13	7.57	7.99
# 5 @ 6.00"	# 5 @ 8.96"	5.70	6.23	6.74	7.23	7.71	8.17	8.61
# 5 @ 5.50"	# 5 @ 8.21"	6.25	6.81	7.35	7.87	8.37	8.85	9.32
# 5 @ 5.00"	# 5 @ 7.46"	6.88	7.48	8.06	8.61	9.14	9.65	10.14
# 6 @ 9.00"	# 5 @ 9.46"	5.30	5.81	6.30	6.78	7.24	7.68	8.11
# 6 @ 8.50"	# 5 @ 8.94"	5.63	6.17	6.68	7.17	7.65	8.11	8.55
# 6 @ 8.00"	# 5 @ 8.41"	6.01	6.56	7.09	7.61	8.10	8.58	9.04
# 6 @ 7.50"	# 5 @ 7.89"	6.42	7.00	7.56	8.09	8.61	9.10	9.58
# 6 @ 7.00"	# 5 @ 7.36"	6.86	7.49	8.07	8.63	9.17	9.68	10.18
# 6 @ 6.50"	# 5 @ 6.84"	7.16	8.05	8.65	9.24	9.80	10.34	10.85
# 6 @ 6.00"	# 5 @ 6.31"	7.50	8.59	9.31	9.93	10.51	11.08	11.61
# 6 @ 5.50"	# 5 @ 5.78"	7.89	9.02	10.07	10.71	11.33	11.92	12.48
# 6 @ 5.00"	# 5 @ 5.26"	8.34	9.52	10.67	11.63	12.28	12.90	13.49

Effective Slab Span as established in accordance with Section 9.7.2.3 of AASHTO LRFD Bridge Design Specifications

Bridges with Bare Concrete Decks

The new deck slabs shall be one-course **Class HPC** concrete slabs. No LMC or other overlay shall be used.

Concrete cover for the top reinforcing bars shall be 2½" minimum. Epoxy-coated reinforcing bars shall be used for both the top and bottom reinforcing bar mats. The design shall include 13-psf for permanent metal deck forms where corrugations match the bar spacing. Refer to Section 2.2.4.2.4 for additional dead load requirements where corrugations do not match the bar spacing. The design shall be in accordance with AASHTO's Standard Specifications using the Working Stress Design method and Exhibit 2 - 6. The maximum allowable compressive stress due to bending in the concrete shall be 1,200 psi, and the maximum allowable tension stress in the reinforcement steel shall be 24,000 psi.

EXHIBIT 2 - 6
RECONSTRUCTION OF BARE CONCRETE DECKS

REINFORCING STEEL		MAXIMUM ALLOWABLE EFFECTIVE SLAB SPAN - FEET						
TRANSVERSE TOP & BOT	LONGITUDINAL BOTTOM	8.00" SLAB	8.50" SLAB	9.00" SLAB	9.50" SLAB	10.00" SLAB	10.50" SLAB	11.00" SLAB
# 5 @ 9.00"	# 5 @ 13.43"	2.75	3.18	3.60	4.01	4.41	4.80	5.18
# 5 @ 8.50"	# 5 @ 12.69"	2.99	3.44	3.87	4.30	4.72	5.13	5.53
# 5 @ 8.00"	# 5 @ 11.94"	3.25	3.72	4.18	4.63	5.07	5.49	5.91
# 5 @ 7.50"	# 5 @ 11.19"	3.55	4.04	4.53	5.00	5.45	5.90	6.33
# 5 @ 7.00"	# 5 @ 10.45"	3.88	4.40	4.91	5.41	5.89	6.35	6.80
# 5 @ 6.50"	# 5 @ 9.70"	4.26	4.81	5.35	5.87	6.38	6.87	7.34
# 5 @ 6.00"	# 5 @ 8.96"	4.50	5.27	5.84	6.40	6.93	7.45	7.95
# 5 @ 5.50"	# 5 @ 8.21"	4.77	5.81	6.42	7.01	7.57	8.12	8.65
# 5 @ 5.00"	# 5 @ 7.46"	5.08	6.17	7.09	7.72	8.32	8.90	9.46
# 6 @ 9.00"	# 5 @ 9.46"	4.12	4.88	5.42	5.96	6.47	6.97	7.45
# 6 @ 8.50"	# 5 @ 8.94"	4.29	5.21	5.78	6.33	6.87	7.39	7.88
# 6 @ 8.00"	# 5 @ 8.41"	4.47	5.49	6.17	6.75	7.31	7.84	8.36
# 6 @ 7.50"	# 5 @ 7.89"	4.66	5.72	6.61	7.21	7.79	8.35	8.89
# 6 @ 7.00"	# 5 @ 7.36"	4.88	5.97	7.06	7.73	8.34	8.92	9.49
# 6 @ 6.50"	# 5 @ 6.84"	5.13	6.25	7.38	8.31	8.95	9.57	10.16
# 6 @ 6.00"	# 5 @ 6.31"	5.41	6.57	7.74	8.89	9.65	10.29	10.91
# 6 @ 5.50"	# 5 @ 5.78"	5.72	6.94	8.15	9.34	10.45	11.13	11.78
# 6 @ 5.00"	# 5 @ 5.26"	6.09	7.36	8.62	9.87	11.09	12.10	12.79

Effective Slab Span as established in accordance with Section 9.7.2.3 of AASHTO LRFD Bridge Design Specifications

2. Reinforcement

For deck slab designs, the Authority's standard shall be epoxy coated reinforcing steel. On a case-by-case basis, however, the Authority may consider other corrosion resistant reinforcing steel to replace epoxy coated reinforcement or to use as an alternative bid item.

Main reinforcement shall be straight continuous bars and the same reinforcement shall be used in the top and bottom of the slab. Longitudinal distribution reinforcement, computed in accordance with the AASHTO LRFD Specification Article 9.7.3.2 for new bridges and AASHTO Standard Specification Article 3.24.10 for deck repair areas, shall be No. 5 bars in the bottom of the slab spaced uniformly between stringers. Longitudinal top reinforcement shall be No. 5 bars at 15 inches, spaced uniformly over the full width of the deck.

Additional longitudinal reinforcement shall be provided in the negative moment region of continuous spans. The additional

reinforcement shall not all be terminated at the same location and shall be developed beyond the dead load point of contraflexure.

The quantity of 7/8" diameter plain bars, weld metal, angles and any other supports for reinforcement steel - such as chairs, bolsters, etc. used to support the deck reinforcement on the stringers/beams will not be measured for payment.

3. Concrete Haunch
   Where concrete slabs are supported on steel or precast concrete stringers, girders or other beams, the bottom of the concrete slab shall be positioned above the top of the supporting beam so as to provide a concrete haunch. The haunch shall be made deep enough to ensure that the concrete slab can be constructed to the nominal depth shown on the plans and with its top surface at the required profile, without any decrease in slab depth over the beam due to construction tolerances, variation in beam depth, variation in camber, deflection of the beams or other causes. The dimension from the top surface of the slab to the top of the beam shall not be less than the nominal slab plus one-inch. The top of the beam shall normally be set so as to provide the minimum haunch depth over the thickest flange plate, except that for continuous girders, the haunch may be reduced over the interior support where the variability of the elevation of the top of the beam may be expected to be less. Where field splices in the stringers are shown on the plans, or permitted by the Specifications, the haunch shall be a minimum depth of one-inch over the splice plate. Bolt heads may project into the haunch, but one-inch minimum of clear cover shall be maintained between the main steel reinforcement and the bolts.

4. Permanent Steel Bridge Deck Forms
   The main reinforcement in the slab shall be so arranged as to be parallel to the direction of the corrugations in the permanent steel bridge deck forms, and the spacing of the bars should be made the same as a commonly-available corrugation pitch of the forms. The main reinforcement shall be positioned over the centerline of a depressed corrugation in the form, and the top surface of the raised corrugation of the form shall be set one-inch minimum clear of the longitudinal (distribution) reinforcement. The concrete cover over the main bars shall be not less than one-inch clear in any direction to the surface of the form, see Exhibit 2-301. Where it is impracticable to arrange the main reinforcement parallel to the slab corrugations, the level of the steel bridge deck forms shall be dropped so as to provide one-inch of clear cover to the main reinforcement over the top of the corrugations. Where forms are dropped the appropriate dead load allowance for additional concrete in both design and details must be included.

5. Slab Corners
   The reinforcing of the acute corners of skewed slabs shall be given special consideration. In these areas, it may be necessary to place the main reinforcement in a fanned arrangement extending into the

corner and dropping the permanent steel bridge deck forms as necessary to provide the required cover for the reinforcement as shown in Exhibit 2-302.

An alternative method for accommodating acute deck slab corners, however, would be to add 7 additional No. 5 bars splayed equally beneath the top layer of reinforcement. These bars would be placed to maintain 2" minimum clearance between bars and would extend sufficiently to overlap the fully developed sections of the main transverse reinforcement. If chosen, this method shall be sufficiently detailed on the plans.

2.2.4.3 Bearings

1. Standard Drawing Types:
   Standard bearing designs have been made for Elastomeric Bearings and Pot Bearings and are detailed on Standard Drawing Nos. BR-10 to BR-12.

   Steel reinforced elastomeric bearings shall be designed in accordance with Method B as outlined in the AASHTO LRFD Specification. Accordingly, the following sections of the AASHTO Specifications will be revised as follows:

   <u>Section 14.7.5.2</u>
   Replace the first sentence of the second paragraph with the following: "The elastomer shall have a specified shear modulus between 0.095 and 0.150 ksi.

   Replace the second bullet item in the third paragraph with the following: "Does not permit a shear modulus below 0.095 ksi.

2. New Designs, Widenings and Retrofits:
   Bearings shall be designed in accordance with the appropriate provisions of the AASHTO LRFD Specification.

   Elastomeric Bearings which are fully vulcanized to a masonry plate and a sole plate are preferred where their use is practical and cost effective. Elastomeric bearings with a sliding surface will be permitted on a case by case basis.

   High Load Multi Rotational (HLMR) bearings shall be specified for all bridges that qualify as curved girder bridges in accordance with Subsection 4.6.1.2.4 of the AASHTO LRFD Bridge Design Specifications. HLMR bearings should be considered for use in situations where skewed or unconventional structure framing may induce torsion or transverse rotations at the bearing points.

   Seismic isolation bearings shall specified for use as dictated by seismic analysis. Adequacy of seismic isolation bearings shall be evaluated in accordance with the appropriate provisions of the current edition of the AASHTO Guide Specifications for Seismic Isolation

Design. Performance metrics for the bearings shall be presented on the Contract Plans.

Regardless of bearing type chosen, the designer shall evaluate the anticipated construction sequence and alert the Contractor if temporary bracing, preload jacking for thermal displacement, or other special procedures are required to install the bearings without overstress.

3. Provisions for Substructure Movement:
   Settlement of fill under and behind abutments is frequently accompanied by horizontal movement of the abutment top, and small rotations of tall piers will result in appreciable displacement of the bearings. In these circumstances, and others where movements or settlements may take place, provisions shall be made in the design for resetting the bearings. The end diaphragm shall be positioned and designed to provide for jacking the end of the span. Sufficient expansion capacity shall be provided in the bearings to accommodate the substructure movement, and so minimize the need to reset them.

4. Provisions for Bearing Replacement:
   All bearing designs and details shall provide a means for ready removal of the bearing for the purpose of inspection, maintenance and replacement. As an example, the bearing may be placed between steel plates so that removal does not entail the demolition of reinforced concrete substructures. Substructures shall be designed to furnish space for jacks or other devices for temporarily supporting the superstructure. Superstructures shall be designed to accommodate the loads imposed by these devices.

5. ***Provisions for Anchor Bolts:***
   Anchor bolts shall be fully designed for elastomeric bearings. Force effects on anchor bolts to be designed by the bearing fabricator shall be considered where specifying HLMR or Seismic Isolation bearings for use. Where large horizontal or longitudinal forces are anticipated due to multiple lines of fixed bearings at a singles superstructure unit and/or where impact/thrust against guided expansion bearing guides or keeper plates is likely, these forces shall be accounted for in the design of the anchor bolts for elastomeric bearings, or included in the Bearing Design Tables provided for HLMR/Seismic Isolation bearings.

   Where pedestals are used to support bearings, the designer shall consider extending the 1'-6" depth of embedment of the anchor bolt rod as required by design to ensure sufficient embedment of the bolt into adequately sized and reinforced concrete. Additional pedestal reinforcement in addition to, or in lieu of, extending the anchor bolt embedment may also be considered where appropriate or required by design.

Anchor bolts may be installed by the contractor via direct casting into the substructure unit concrete, drilling and grouting the bolts in place, or by casting-in oversize holes or preformed holes in the substructure concrete. Drilling and grouting of bars must be explicitly eliminated from use in the contract documents if the possibility of damaging the structural integrity of the substructure elements is anticipated. If net uplift or tension is anticipated at the anchor bolts, the casting of oversize holes or use of preformed holes in the substructure concrete should be explicitly eliminated from use in the contract Plans.

2.2.5 Substructure Design

2.2.5.1 Piers

1. See Exhibit 2-214 for general guidelines on Turnpike pier details. Details for new bridges are provided for both piers without cantilevers and piers with cantilevers. In an effort to maintain the originally intended and present appearance of the Turnpike, Engineers shall determine which of the two pier types are already predominant in the vicinity of the Turnpike upon which the new bridge is located and submit the proposed pier type to the Authority for review and approval. In the absence of any available information to aid in choosing the correct pier type to be used, piers without cantilevers shall be used wherever possible and practical. For existing bridges requiring rehabilitation, reconstruction or widening, Engineers shall utilize the pier type that matches that of the existing bridge.

2. Restrictions on the use of frame piers
   These restrictions apply to all piers adjacent to the Turnpike / Parkway or Turnpike / Parkway ramps unless they are positioned more than 30 feet clear from the outer edge of shoulder.
   a. Single shaft piers shall have a minimum horizontal cross-section area of 30 square feet.
   b. Frame piers shall have a minimum of three columns.

3. Footings
   Frame piers shall generally be designed with a continuous footing supporting all the shafts, except that piers founded on rock or piles may have individual footings for each shaft. The footing width of piers founded on soil shall be at least one-third of the height (from bottom of footing to top of cap beam) and for piers founded on rock or unyielding soil shall be at least one-fourth the height. Soils with a bearing capacity of at least three tons per square foot may be considered unyielding. If piles are used, the distance between the outer rows shall be not less than one-fourth the height of the pier.

4. Temperature and Shrinkage
   Frame piers shall be designed for the combined effects of temperature change and concrete shrinkage, unless a placing sequence is specified for the cap beam that will reduce or

eliminate the shrinkage stresses. Open joints in cap beams and footings shall only be used at a corresponding discontinuity in the superstructure.

2.2.5.2 Abutments

1. Design Criteria
   The AASHTO LRFD Specification as modified herein shall govern the design of the abutment's structural concrete and foundation.

   Abutments shall be designed to conform to the requirements for Retaining Walls (Subsection 2.3) and to resist all vertical and horizontal forces from the bridge superstructure and the bridge approach slab. The use of fixed bearings upon abutments should be avoided wherever possible.

   Abutment wingwalls shall be founded on footings for the full length of the wingwalls, i.e., no portions of the wingwall stems shall be cantilevered beyond the limits of the foundations (no elephant ears).

2. Approach Slabs
   Approach slabs shall be provided for all abutments and shall be constructed for the full width of the roadway including shoulders. Two conditions of support for the approach slab shall be considered in the design of the abutment.
   a. The "as-constructed" condition where the approach slab is supported by the fill as a surcharge load.
   b. The condition where the soil does not provide any support for the approach slab immediately adjacent to the abutment and the slab spans as a beam from the backwall to the soil. The span of the slab shall be assumed to be 25 feet.

3. Construction Condition
   Abutments shall be designed for a construction condition where the earth fill is fully placed before the superstructure is erected. The design for this condition shall include a surcharge load for construction equipment. For this condition, the resistance factors may be increased by 25%.

4. Alternate Abutments Walls
   a. Alternate type abutments; such as Mechanically Stabilized Earth (MSE) or Prefabricated Modular Wall proprietary type systems should be considered. Use of these systems should be compared with other abutment types to determine which option best meets project objectives, i.e., structure cost, functionality, construction time, aesthetics and other project specific parameters. Analysis and recommendations should be included in the Bridge Type Study and Foundation Report.
   b. Proprietary type abutment systems shall be designed based on a 100 year life.

c. Refer to 2.3.2 for MSE and Prefabricated Modular wall system requirements. Criteria stated therein shall be applied in such Abutment designs.
d. The design of proprietary type wall systems supporting abutment caps shall take into account the anticipated movements and loads transmitted from the abutment caps. Plans and/or specifications for the wall system shall clearly state the additional loads and/or movements that will be imposed on the wall system. On a project specific basis, Engineers may need to consider certain design options, such as adding soil reinforcement straps to the abutment backwall cap, isolating the deep foundation from the wall face, requiring the proprietary system to be designed for higher pressures, etc.
e. Engineers shall contact wall system manufacturers during the design process to discuss project specific design requirements and details to ensure there will be no conflicts during construction phasing.

5. Integral Abutments
Integral abutment design shall conform to the most current provisions of the 4th Edition of the NJDOT Bridges and Structures Design Manual, Section 15, and the associated NJDOT Standard Drawing Plates 2.9-1 through 2.9-5, except as supplemented/modified by the following:

a. The joints between abutment stems and independent wingwalls shall always be oriented longitudinally, parallel to the bridge center line. The independent concrete wingwall joint details shown in Exhibit 2-200, Detail 1A shall be used in lieu of the details shown on the NJDOT Standard Drawing Plates.

b. The minimum penetration of the abutment stem into the embankment shall be 2’-0”.

c. Loose or compressible fill shall be used behind and beneath any wingwall not independent from the abutment stem.

d. Provisions shall be made for expansion at the end of relief slabs by installation of sleeper slabs and joints, regardless of the bridge length.

e. Span arrangement and intermediate pier bearing selection (where applicable) shall be such that approximately equal movements and applied forces take place at both abutments.

f. Single span bridges shall have a span length not exceeding 180 feet.

g. The minimum reveal between the bottom of the superstructure and the top of the embankment shall be 1’-6”.

h. All reinforcement bar sizes unspecified on the NJDOT Standard Drawing Plates shall be designed to resist the appropriate applied stresses.

i. If Mechanically Stabilized Earth (MSE) wall systems are utilized at integral abutment locations, the following provisions shall apply:

   i. The minimum clear distance between the back of the wall facing and the edge of the abutment stem foundation piles or pile casings shall be 1'-6".

   ii. Soil reinforcing straps shall be designed considering the additional loads transmitted from the piles to the reinforced soil backfill.

j. Rigid utility conduits, such as gas, water and sewer shall not pass through integral abutments. The anticipated longitudinal movement of the superstructure and the resultant rotational and translational movement of the substructure make provision for these movements in rigid conduits difficult. Conduits of this type shall be located off integral abutments. Flexible utility conduits for electrical, telephone and cable TV that are properly sleeved through integral abutments are acceptable.

k. It is urged however to avoid locating flexible utility conduits through integral abutments and under relief and sleeper slabs whenever possible. Flexible utility conduits that are located under relief and sleeper slabs shall also be properly sleeved in this area to avoid any future disturbance to the relief and sleeper slabs.

l. Manholes, utility valve covers and drainage inlets shall be located beyond the limits of relief and sleeper slabs.

m. Semi-integral abutments are allowed on a project by project basis subject to the approval of the Chief Engineer.

2.2.5.3 Scour Design

1. Bridge substructures and foundations shall be evaluated for scour conditions in accordance with the AASHTO LRFD Specification. Hydraulic and scour analysis shall be performed in accordance with Section 4 of this Manual.

2. In accordance with the AASHTO Manual, new and replacement bridges shall be designed for the scour condition for a recurrence interval that is expected to produce the most severe adverse condition, up to 100 years maximum. Other existing bridges scheduled to be significantly rehabilitated or widened shall be evaluated by the Authority on a project by project basis. Scour evaluations of existing bridge shall also take into account past history of floods in the project area. The use of flood criteria greater than 100 years may be necessary and shall be evaluated on an individual bridge basis.

3. In accordance with the AASHTO Manual, new, replacement and widened bridges shall be checked for the scour condition for a 500 year flood.

4. In accordance with Section 4 of this Manual, a Scour Report shall be submitted which shall include scour countermeasure and resistance recommendations.

5. Scour countermeasures to be considered include:
   a. Designing the bridge for the scoured condition with the use of deep foundations; such as, piles or drilled shafts.
   b. Reduction of flood velocity by rounding the shape of a pier.
   c. Driving sheet piling to protect existing footings.
   d. Driving sacrificial piles to deflect flow and induce deposition in a local scour hole at piers.
   e. Scour monitoring program.
   f. Armoring.

2.2.6 Design for Seismic Events

2.2.6.1 Design Specifications

Except as modified below, the seismic evaluation of all highway bridges shall be governed by the following design codes:

- AASHTO *LRFD Bridge Design Specifications*, 5th Edition, 2010.
- AASHTO *Guide Specifications for LRFD Seismic Design*, 1st Edition, 2009.
- FHWA *Seismic Retrofitting Manual for Highway Structures,* MCEER-06-SP10, 2006.
- AASHTO *Guide Specifications for Seismic Isolation Design*, 3rd Edition, 2010.

The AASHTO *Guide Specifications for LRFD Seismic Design* offers a displacement-based design alternative to the force-based design methodology presented in the AASHTO LRFD *Bridge Design Specifications*. Displacement-based seismic design has the potential to offer a more economical structure design, especially in regions of high seismic activity. However, the Turnpike and Parkway facilities are contained within a region of relatively low seismic activity where displacement-based designs have generally proven to offer minimal savings as compared to force-based designs. While the designer is not explicitly discouraged from using a displacement based seismic design, it should be noted that the potential benefits of such a design may be negligible.

2.2.6.2 General Considerations

The most common and significant cause of earthquake damage is ground shaking. Additional seismic hazards can also include ground failure, liquefaction, lateral spreading, differential settlement and land sliding. Structures shall be evaluated and proportioned to resist such events. As such, all Turnpike and Parkway structures shall be evaluated to resist a seismic event that has a 7% probability of exceedance in 75 years (1000 year event).

For the purposes of both existing structure rehabilitation and new structure design, the following criteria shall be used when considering the provisions of the noted code subsections:

Seismic Hazard
(AASHTO *LRFD Bridge Design Specifications* 3.10.2)
The Site Specific Procedure may be used for any bridge, but shall be mandatory for the following situations:

- Bridges 1000 feet or greater in length.
- Bridges with a deck area exceeding 50,000 square feet.
- Bridges designated as “Critical”.
- Anywhere a time history response analysis will be performed as part of the overall design / retrofit scheme.

Operational Classification
(AASHTO *LRFD Bridge Design Specifications* 3.10.5)
Structures which carry local traffic over the Turnpike or Parkway and all pedestrian bridges shall be classified as “Other” unless that road is part of an emergency or evacuation route, in which case, they shall be classified as “Essential”. Structures which carry Turnpike or Parkway traffic shall be classified as ‘Essential’. Certain vital structures which the Authority determines to be of high collateral value shall be classified as “Critical”.

Seismic Performance Zones
(AASHTO *LRFD Bridge Design Specifications* 3.10.6)
For clarity, the ‘Seismic Performance Zone’ as noted above is referred to as the ‘Seismic Design Category’ in the AASHTO *Guide Specifications for LRFD Seismic Design* and as the ‘Hazard Level’ in the FHWA *Seismic Retrofitting Manual for Highway Structures.* For the purposes of design, these nomenclatures are considered as equivalent and interchangeable.
All structures shall be evaluated using the methods of analysis and foundation and abutment design procedures as required for Seismic Zone 2 criteria. All new structures shall be designed to incorporate minimum support lengths and column design / ductility details required for Zone 2 criteria.

Analysis for Earthquake Loads
(AASHTO *LRFD Bridge Design Specifications* 4.7.4.3 & 3.4.1)
Single Mode or Uniform Load analyses are permitted for Regular bridges. Multi Mode analyses shall be used for all Irregular and Critical bridges. In addition to the provisions noted in the AASHTO *LRFD Bridge Design Specifications* Sections 4.7.4.3, the following structure types shall be considered to be “Irregular bridges”:

- Bridges with any span curved in plan, where the definition of curvature is as described in Section 4.6.1.2.4b of the AASHTO *LRFD Bridge Design Specifications*.
- Bridges designed with transverse box girder elements.
- All structures designated as “Critical” by the Authority.

Extreme Event I Load Combination in Table 3.4.1-1 of the LRFD Bridge Design Specifications shall consider a Live Load Factor (γ_{EQ}) of 0.50.

These general considerations provide for a rational approach to structure designs that allows the use of simplified analysis methods for the majority of structures in the Turnpike and Parkway inventories, but requires the inclusion of code mandatory detailing that offers significant increases in seismic performance, ductility, and redundancy at a relatively incidental increase to the bridge construction cost.

2.2.6.3 Retrofit Specific Requirements

Unless directed otherwise by the Authority, a seismic retrofit shall be considered for all existing bridge rehabilitation projects which meet the following criteria:

- Anticipated project work includes increasing the bridge deck area by more than 25% and/or replacing the entire bridge deck.
- Anticipated project work includes replacing or repairing more than 25% of the superstructure bearings.

When the estimated cost of the proposed seismic retrofit strategy exceeds 25% of the estimated replacement cost of the structure, replacement of the structure shall be considered.

In addition to the above criteria, the designer is responsible for rational consideration of all existing structures within a project for seismic retrofit eligibility. Development of a retrofit scheme should be considered where the anticipated scale and type of work to an existing bridge offers the opportunity to include cost effective seismic retrofitting measures into the project.

When an existing structure has been determined to be a candidate for seismic retrofitting, a conceptual retrofit strategy shall be included as part of the Phase A submission. When the estimated cost of the proposed retrofit strategy indicates that a full structure replacement may be warranted, the Authority shall be contacted prior to the Phase A submission.

The majority of older structures should not be expected to be seismically retrofitted to meet the force and ductile detailing requirements set forth in the AASHTO LRFD codes noted above, as many of these existing structures were designed with little or no provision for resistance to seismic events.

The FHWA *Seismic Retrofitting Manual for Highway Structures,* MCEER-06-SP10, 2006 shall be used as a guide regarding evaluation

procedures and upgrade measures for retrofitting existing seismically deficient highway bridges.

Seismic retrofitting of existing bridges differs from the design of new bridges in that remaining service life is typically considered in establishing a consistent level of safety with respect to the statistical likelihood of encountering a seismic event. The FHWA manual attempts to balance the reduced anticipated service life of a rehabilitated structure by considering a lower level seismic event with a recurrence interval of 100 years rather than considering the upper level seismic event with a recurrence interval of 1000 years. Regardless of the anticipated remaining service life, all Authority-owned bridges shall be retrofitted to withstand the 1000 year upper level event. The requirement to investigate for the lower level event is waived.

For existing structure seismic retrofit evaluation, Method C: Component Capacity/Demand Method as described in Section 5.4 and Appendix D of the Retrofitting Manual shall be used, at a minimum. Nonlinear static and/or dynamic analyses are recommended, but not required, where structures with ductile details are to be evaluated, or where member strengthening and/or ductility enhancement are considered as part of the retrofitting concept. The provisions in 2.2.6.2 shall apply for all retrofit designs.

Seismic retrofitting of existing structures constitutes a substantial structural alteration. The design engineer shall perform a complete LRFR load rating analysis of the as-retrofitted structure in accordance with the NJTA Load Rating Manual.

Isolation strategies, if employed, shall be designed in accordance with the AASHTO *Guide Specifications for Seismic Isolation Design*, 3rd Edition. This specification is explicitly intended to function in concert with the AASHTO *LRFD Bridge Design Specifications* and the AASHTO *Guide Specifications for LRFD Seismic Bridge Design.* The use of Load Factor Design or Allowable Stress Design methodologies in concert with these specifications is not permitted.

2.2.7 Computer Software (For Design Purposes Only – See Section 2.4 of the NJTA Load Rating Manual for Load Rating Computer Software Requirements)

2.2.7.1 Guidelines on Use

The use of computer software has become a valuable tool to the structural engineer. However, even the best computer software cannot replace good engineering judgment and design practice. In addition to the guidelines noted below, it is recommended that the checked results be reviewed by senior structural engineers or technical managers as part of the Engineer's QA/QC process.

A list of the computer software (including version) used for the structural analysis and/or design of Authority structures shall be submitted for review and approval. The Authority's Engineering Department approval will not relieve the Engineer of the responsibility for the use of the program. The Engineer still assumes full responsibility for the logic and results of the program.

The following guidelines shall be followed:

1. Program input and output shall always be checked by a second Engineer. All input and results shall be printed out and placed in the design calculations. Engineers shall be responsible for verifying that the results of the computer software are correct. Verification shall be in the form of a second computer program or enough hand calculations to verify results.

2. All computer analysis and design shall be performed under the direct supervision of an experienced structural engineer familiar with the computer software program.

3. When utilizing spreadsheets, Mathcad, or computer programs written by Engineers or obtained from other sources, the Engineer and checking Engineer shall thoroughly check the language and/or formulas to assure the integrity of the structural analysis and/or design. Large or complex programs shall be verified by hand calculations to assure the program is performing as intended.

4. Design calculations shall include as much program documentation as required to ensure that the program input and output can be interpreted by the Authority.

2.2.7.2 Commercial Structural Programs

The following computer software has been utilized by the Authority's Engineering Department. It shall not be construed as an endorsement of any particular software by the Authority's Engineering Department and Engineers shall be fully responsible for the use of such software. It is recommended that Engineers refer to the corresponding manuals for more detailed instructions, specifications, and limitations.

PENNDOT Programs:

ABLRFD: LRFD Abutment and Retaining Wall Analysis and Design
BPLRFD: LRFD Bearing Pad Design and Analysis
BXLRFD: LRFD Box Culvert Design and Rating
FBLRFD: LRFD Floorbeam Analysis and Rating
PSLRFD: LRFD Prestressed Concrete Girder Design and Rating
SPLRFD: LRFD Steel Girder Splice Design and Analysis
STLRFD: LRFD Steel Girder Design and Rating
ABUT5: Abutment and Retaining Wall

BAR7: Bridge Analysis and Rating
BOX5: Box Culvert Design and Rating
BSP: Beam Section Properties
CBA: Continuous Beam Analysis
PS3: Analysis And Design Of Prestressed Concrete Girder, Box Beams And Voided Slabs.

Note: PENNDOT programs are written by and for the Pennsylvania Dept. of Transportation and as such, there are defaults that are built into the programs which apply to PENNDOT's design criteria. The Engineer is advised to review and evaluate these defaults of the program and make the necessary modifications to ensure that bridge components are designed in accordance with the AASHTO design criteria as modified by this Section.

CONSPAN LA: Analysis and design program for prestressed concrete girders, box beams and voided slabs bridges. The bridge can be single-span or multiple-span bridges, constructed as simply supported beams and made continuous by reinforcing the cast-in-place top deck and diaphragms. The Engineer can specify LFD or LRFD design.

DESCUS I: Analysis and design (partial design) software for horizontally curved composite or noncomposite steel I-girder bridges. The Engineer can specify WSD, LFD or LRFD design methodologies. The bridge can be continuous and skewed over supports.

DESCUS II: Same description as **DESCUS** I, but was specifically written to analyze a horizontally curved structure composed of steel box sections.

MERLIN-DASH: Analysis and Design program for tangent steel beam and plate girder bridges. The Engineer can specify WSD, LFD or LRFD design methodologies.

RC-Pier LA: Analysis and design of reinforced concrete piers based on AASHTO LFD and LRFD codes. Wall, multi-column and hammerhead piers are all handled by the program. Footings can be either isolated, combined or strap and they can be either spread or on piles. The program can easily switch between English and metric unit systems.

SEISAB: Analysis of simply-supported or continuous deck girder-type bridges for seismic response with no practical limitation on the number of spans or the number of columns at a bent/pier. SEISAB contains both the single mode and multi-mode response spectrum analysis techniques included in AASHTO.

GTStrudl: Structural analysis program for static, dynamic, p-delta, nonlinear, buckling or cable analysis. The program accepts truss, plane, floor, and space structural types. GTStrudl is capable of steel, concrete and timber design. The program uses a common language-

based input format which can be created through an editor, a graphics input generator, or through CADD-based input generators.

STAAD-PRO: Structural analysis program for static, dynamic, p-delta, nonlinear, buckling or cable analysis. The program accepts truss, plane, floor, and space structural types. STAAD is capable of steel, concrete and timber design. The program uses a common language-based input format which can be created through an editor, a graphics input generator, or through CADD-based input generators.

MDX Software Curved & Straight Steel Bridge Design & Rating: *Analysis and design software for straight and curved steel bridge plate girders, box girders or rolled shapes. The Engineer can specify ASD, LFD or LRFD design methodologies. The Engineer can perform girder ratings in accordance with ASD, LFD or LRFD.*

2.2.8 Permits

For permit requirements to be considered during design, reference is made to the Authority's Procedure Manual. The following information is provided for general guidance.

1. Navigable Waterways - U.S. Coast Guard
   A navigation permit from the U.S. Coast Guard is required for crossings, relocations or encroachment of waterways that are located within their jurisdiction.

   Navigation lights are required on all structures over navigable waterways unless this requirement is specifically waived by the U. S. Coast Guard. The Engineer shall determine navigational lighting requirements and forward the necessary applications for U. S. Coast Guard approval of navigational lighting requirements to the Authority's Engineering Department for their review and submission to the Coast Guard.

2. Other Waterways - NJDEP Stream Encroachment, Waterfront Development, Coastal Area Facility Review Act.
   Waterway openings and vertical clearances are contingent upon the hydraulic and hydrologic analysis and shall be subject to the approval of the New Jersey Department of Environmental Protection.

2.3 RETAINING WALLS

2.3.1 Earth Retaining Structures

1. Foundation Design
   Foundations for earth retaining structures shall be designed to satisfy the following conditions:

   a. Retaining structures shall be sized to satisfy the overturning requirement of AASHTO LRFD Section 11.6.3.3.

b. Retaining structures shall be sized to satisfy the sliding requirements of AASHTO LRFD Section 10.6.3.4 and 11.6.3.6. The final design value of the coefficient of friction (AASHTO LRFD TAN δ) for the soil should be estimated as part of the geotechnical investigation, but may be taken as 0.45 for granular soils as a preliminary estimate. The value for other soils may be lower.

c. For structures founded on soil, the resultant of all the forces acting on the structure above its base shall intersect the base within the middle half. For structures founded on rock, the resultant shall intersect the base within the middle three-fourths. No uplift shall be permitted on piles except under seismic loadings.

d. The loads on the rear piles of abutments and retaining walls shall be computed with the horizontal forces from the soil reduced to 75 percent of the maximum values. The pile resistance load shall not be exceeded for this condition.

e. Careful consideration shall be given to the position of the water table, and the stability of the structure for the service limit state shall be checked with the water table at its highest normal level. Where appropriate, the service limit state shall also be checked for exceptional flood conditions, in which case the resistance factors may be increased by 25%. In these cases, both the horizontal earth pressures and the vertical dead loads should be reduced for material below the water table. Possible drawdown conditions should be considered and forces from the unbalanced hydrostatic head should be added to the overturning moments. Pile loads and soil pressures should be computed with the water table at its lowest normal elevation.

f. The passive resistance of the soil in front of the structure shall not be considered as resisting either the horizontal forces caused by the earth pressure or the bending moments in the stem due to those factors.

g. The resultant horizontal force on each pile shall be computed and shall not exceed the capacity of the pile. The horizontal component of the axial load in the battered piles may be considered as resisting part of the horizontal force. The capacity of the pile to resist unbalanced horizontal force shall be determined from an analysis of the bending forces in the pile taking into account the conditions of fixity of the pile and the modulus of horizontal subgrade reaction of the soil. The combined bending moment and axial load shall be evaluated by the structural design provisions of the AASHTO LRFD Specification.

h. Retaining walls shall be founded on footings for the full length of the walls, i.e., no portions of the wall stems shall be cantilevered beyond the limits of the foundations (no elephant ears).

2. Wall Thickness

The minimum thickness of any cast-in-place concrete wall shall be 12 inches for walls up to 10 feet high, 15 inches for walls up to 14 feet high, and 18 inches thick for walls higher than 14 feet. Low walls should be designed with a vertical rear face and higher walls should be battered, with a rear face batter of not less than 1 in 12. Battered faces shall (where possible) be plane, and changes in batter shall be avoided.

3. Backfill
   The backfill behind abutments and walls shall consist of a layer of Porous Fill which shall be a minimum of five feet wide, and shall be adequately drained at its base to prevent the build up of water pressure at the back of the structure.

2.3.2 Alternate / Proprietary Retaining Walls

1. Engineers shall consider the use of proprietary retaining wall systems at all retaining wall locations. Proprietary retaining wall systems, Mechanically Stabilized Earth (MSE) Walls and Prefabricated Modular (PM) Walls, are generally more cost effective and provide a shorter construction time than conventional cast-in-place reinforced concrete cantilever retaining wall systems. Allowing contractors to bid on and construct alternative proprietary retaining wall systems also encourages competitive bidding and should result in additional cost savings.

2. The Supplementary Specifications to the current New Jersey Turnpike Authority Standard Specifications provide a list of Prefabricated Modular and Mechanically Stabilized Embankment wall systems and design and construction criteria that shall be used as guidance when developing the project specific specifications.

3. The Engineer shall compare retaining wall types and listed systems to determine which wall configurations best meet project objectives, i.e., structure cost, functionality, construction time, aesthetics, durability, and other project specific parameters. Analysis and recommendations should be included in the Bridge Type Study and Structural Foundation Geotechnical Engineering Report.

4. Engineers shall consult with wall system manufacturers/suppliers/vendors during the design process to discuss project specific design requirements and details to ensure there will be no conflicts during the construction phase, and to verify the applicability of the wall system to specific sites and the project. The Engineer shall list the applicable wall systems in the contract specifications. Only those wall systems participating in the design consultation shall be listed in the contract specifications.

5. Alternate retaining walls will be generically presented in the contract documents using the Common Structure Volume (CSV) concept. The CSV is the volume into which all potential wall systems can be placed. All work items required to construct the wall and all appurtenances, ancillary items and all work to complete the project located within the CSV are not measured but are included in the pay item for the retaining wall. The CSV concept allows the quantification of pay items outside the CSV, such

as excavations, embankments, etc., such that those quantities will not vary due to the proprietary wall system selection.

Alternate walls are defined as walls, often proprietary, such as Mechanically Stabilized Earth Walls (MSE) and Prefabricated Modular Walls (PM), other than conventional walls (cantilever, gravity, piling and crib walls), deemed appropriate for construction at a given site and bid competitively.

6. MSE Wall Design Guidelines

   a. Except as modified by the Supplementary Specifications to the current New Jersey Turnpike Authority Standard Specifications and the 2007 New Jersey Turnpike Authority Design Manual, Section 2, through Current Updates designs of MSE and Prefabricated Modular Wall retaining wall systems shall conform to the following:

DESIGN SPECIFICATIONS

AASHTO LRFD Bridge Design Specifications, Current Edition with Interims through Current Editions

AASHTO LRFD Bridge Construction Specifications, Current Edition with Interims through Current Editions

2002 AASHTO Standard Specifications for Highway Bridges, 17th Edition and as Modified by the 2007 New Jersey Turnpike Authority Design Manual, Section 2, through Current Updates, for Modifications Appropriate to Load Factor Design (LFD).

DESIGN METHOD

Load and Resistance Factor Design (LRFD): Proprietary Wall

Load Factor Design (LFD): Internal Strength and Stability for Barrier Parapet and Moment Slab System

Allowable Stress Design (ASD): External Stability for Moment Slab

IMPACT LOAD

Load Factor Design (LFD) and Allowable Stress Design (ASD): Vehicular Impact Load applied to the Barrier Parapet and the Moment Slab System shall be as per AASHTO Standard Specification, Section 2.7.1.3.

Load and Resistance Factor Design (LRFD): Vehicular Impact Load applied from the barrier parapet and moment slab system to the proprietary wall shall be as per AASHTO LRFD Bridge Design Specifications, Section 11.10.10.2

The impact requirements of AASHTO LRFD Section 3.6.5. are waived for MSE or PM abutment walls which envelop pile supported abutment seat beams.

b. Design Engineers will be responsible for developing preliminary design and contract documents for MSE Walls to include, but are not limited to:

- Establish Project Requirements – including all geometry, loading conditions (permanent, transient, seismic, etc.), performance criteria, and construction constraints.
- Establish Project Parameters – evaluate existing topography, site subsurface conditions, geotechnical report, reinforced wall fill properties, and retained backfill properties.
- Estimate Wall Embedment Depth, Design Height(s), and Soil Reinforcement Length(s)
- Define nominal loads
- Summarize Load Combinations, Load Factors, and Resistance Factors
- Evaluate External Stability for strength limit state and extreme events
  - Evaluate sliding
  - Evaluate eccentricity
  - Evaluate bearing on foundation soil
  - Settlement analysis (at service limit state)
- Assess Overall Global Stability
  - Static loading conditions
  - Seismic loading conditions
  - Sudden drawdown conditions
- Assess Compound Stability
- Design Wall Drainage Systems. – Coordinate with vendor
  - Subsurface drainage
  - Surface drainage
- Develop the Common Structure Volume for each wall in the Contract.
- Provide design information in contract documents
  - Strength limit state factored and nominal bearing resistances
  - Seismic nominal resistance
  - Bottom of footing elevations
  - Design parameters: density, friction angle, cohesion
  - External loads: lateral loads from MSE abutments, impact loads

c. Contractors, material suppliers and/or wall vendors will be responsible for developing the final design for MSE Walls to include, but are not limited to the following:

- Evaluate Internal Stability for Strength limit state and extreme event, and Confirm External Stability
  - Select type of soil reinforcement
  - Define critical failure surface (for selected soil reinforcement type)
  - Define unfactored loads

- Establish vertical layout of soil reinforcements
- Calculate factored horizontal stress and maximum tension at each reinforcement level
- Calculate nominal and factored long-term tensile resistance of soil reinforcements
- Select grade (strength) of soil reinforcement and/or number of soil reinforcement elements at each level
- Calculate nominal and factored pullout resistance of soil reinforcements, and check established layout
  - Check connection resistance requirements at facing
  - Estimate lateral wall movements (at service limit state)
  - Check vertical movement and compression pads
  - Design of Facing Elements
  - Confirm Overall Global Stability
  - Confirm Compound Stability
  - Confirm Wall Drainage Systems – working drawings
  - Subsurface drainage
  - Surface drainage
  - Where design parameters are modified by the contractor, material supplier and/or vendor, they shall also evaluate the external stability for revised wall configurations.

d. The following guidance shall also be followed:

See Sections 432 and 433 of the Supplementary Specifications for additional guidance.

The NJTA Sample Plans and Exhibits 2-500 Series of this Manual shall be referred to for guidance in providing for proprietary wall details and presentations.

Use of on-site materials for select backfill shall be considered. Geotechnical site investigation shall include sampling and testing of potential borrow sites for select backfill – see NJTA Procedures Manual.

Where foundation conditions indicate consideration of two stage wall construction, the Engineer shall evaluate, in consultation with wall vendors, one stage wall construction with ground improvement techniques versus a two stage wall regarding differential settlement, post construction settlement, construction duration, rideability, life cycle costs, etc.

Use of MSE wall systems that include geosynthetic reinforcements (polymeric reinforcement), also defined as extensible, is not permitted.

For MSE wall systems that are located adjacent to roadways that may be chemically deiced, a high density polyethylene geo-membrane shall be placed below the pavement and just above the first row of reinforcements to intercept any flows that may contain the deicing chemicals. The membrane shall be sloped to drain away from the wall

facing. Reference is made to NJTA Supplementary Specifications for type of material to be used.

Where MSE walls are constructed “back to back”, such as on ramps and bridge approaches, the configuration of the drainage and impervious membrane systems shall be designed to prevent chemically aggressive runoff from penetrating select backfills, porous fills and any fill retained between the wall systems. Underdrain piping shall be provided to direct the runoff beyond the limits of the wall systems.

Where MSE walls will be constructed in or adjacent to open water that may be salt, tidal or potentially brackish, the water must be tested for pH, chlorides, sulfates and other aggressive chemicals. Where tests show aggressive materials, extraordinary provisions to provide 75 year service life may be required. Consultant shall provide the test results in the Supplemental Specifications for the Contractor’s use in design of the soil reinforcement. In chemically aggressive environments the use of stainless steel soil reinforcements may be considered. The wall system supplier shall make appropriate recommendations and designs to include provisions for the required 75 or 100 year service life.

In the design of Prefabricated Modular Walls, when the wall is to be constructed in fills or cuts above the water table, one weep hole and a 2’ x 2’ stone pocket shall be provided behind the front face of each of the lowest exposed units. ***If necessary, the weep hole may be replaced with a 8 inch perforated high density polyethylene pipe and a 2’x2’ stone pocket.***

For MSE Walls and Prefabricated Modular Walls constructed in cuts below the water table, an 8-inch Perforated HDPE pipe and 2’ x 2’ stone pocket shall be placed parallel to and behind the wall. The area above the stone pocket behind the wall shall be backfilled with porous fill.

2.4 CULVERTS

Culverts shall be constructed as box culverts or 3-sided rigid frames with reinforced concrete Class “B”. As a minimum, culverts shall be of sufficient length so that the full roadway section, including shoulders and berms, can be maintained. Footings for culvert wingwalls shall either be placed at the same time as the culvert floor slab or shall be adequately keyed and doweled into it. Toe walls shall be provided along the edge of culvert floor slabs or apron slabs.

Precast culverts shall be permitted and the design shall conform to either the AASHTO LRFD Specification or the AASHTO Standard Specification for Highway Bridges. Engineers shall contact precast manufacturers during the design to discuss project specific design requirements and details to ensure there will be no conflicts during the construction phase. Precast culverts shall not be used when the top slab is to be used as a riding surface.

2.5 SIGN SUPPORTS

The various types of signs described in this section are either ground mounted or on overhead sign structures. Each of these general categories is sub-divided into various support methods:

1. Ground Mounted
   Small Highway Signs (<50 square feet)
   Large Highway Signs (≥50 square feet)

2. Overhead Type Structures
   Span Type Structures
   Cantilever Type Structures
   Butterfly Type Structures
   Bridge Mounted Structures

2.5.1 General Design Criteria

All Sign Support Structure designs shall be completed in accordance with the latest edition of the AASHTO Standard Specifications for Structural Supports for Highway Signs, Luminaires and Traffic Signals and the current AASHTO Standard Specifications for Highway Bridges. For sign placement layout guidelines and sign panel requirements, see Sections 6A and 6B of this Manual.

1. Ground Mounted
   a. Small Highway Signs (<50 square feet)

      <u>Turnpike – Channel/U Post</u>
      See Section 6.

      <u>Parkway - Timber Post</u>
      Small highway sign supports shall be timber posts. Having the values of “H” and “W” of the sign panel, the Engineer can then use the Tables on Exhibits 2-401 for determining the size of the timber post as well as the depth of foundation embedments to be used on that installation.

   b. Large Highway Signs (≥50 square feet)

      <u>Turnpike - Single Aluminum Post</u>
      Many signs are of sizes which require a single tubular post for support. Standard signs utilizing single posts are noted on Standard Drawings SI-1 to SI-3. Any signs not covered by the standards which have a panel width of at least 3’ and no greater than 5’-6” shall be installed on a single extruded aluminum tube having an outside diameter of 4” and a wall thickness of 0.250”. This type of post shall have a cast aluminum cap and a two-piece cast aluminum base of the same design as that used for the larger aluminum tubular posts (See Standard Drawings SI-13). For foundation details, see Standard Drawing SI-22.

Should the Engineer feel that if any of the standard signs or any other small signs which are to be erected on a 4" aluminum tubular post are considered to be in an area subject to frequent impact from vehicles, it should be proposed to the Authority's Engineering Department that these signs be erected on multiple galvanized steel wing channel posts or another type of support.

Turnpike - Multi-Aluminum Post

Many of the standard signs are of such a size they require two or more extruded aluminum tubular posts as indicated on standard Drawings SI-1 to SI-4. Further, contract signs of a certain size may also require a similar multi-post support system.

The number of posts required to support any sign panel is dependent on the width and height of the panel. In order to keep the stresses in the horizontal stringers, which hold the sheet sections together, within allowable limits, limiting panel sizes are shown on Standard Drawing SI-25 for either 2, 3 or 4 post mounting systems. To assist the Engineer in determining the proper size and number of posts to use on any particular ground mounted installation, the chart on Standard Drawing SI-25 has been provided. The intersection of a sign panel's height and width will fall within an area which will indicate whether 2, 3, or 4 supports are required. On this drawing there is a series of diagrams which show the proper spacing of the posts along the width of the panel expressed as decimal fractions of the panel width.

Once the number of posts required to support the panel has been determined, the Engineer shall calculate "h". This dimension "h" is the height of the longest post used on that installation. It is measured from the middle of the sign panel to ground level, and is rounded off to the next 2-foot increment. In determining "h", the Engineer shall assume that the ground outside of the berm area slopes 1 foot vertically for every 2 feet horizontally, unless there is information available to substantiate using a flatter or a steeper side slope. It is desirable to provide posts of sufficient length to insure flush ground mounting.

Having the values of "h" and the area of the sign panel, the Engineer can then use the charts on Standard Drawing SI-25 for determining the post diameter to be used on that installation. The post size to be used will be indicated by the curve (properly selected as to required numbers of posts) which lies just above the intersection of "A" and "h". The post size indicated on that curve shall be the outside diameter and wall thickness of all tubular supports for that installation. In some instances, especially where large diameter and or heavy wall thicknesses are indicated for a particular installation, consideration should be given to the use of an additional post, whereby a tube of smaller diameter and thickness of wall may be utilized.

On any ground mounted sign installation which will have two sign panels, one mounted above the other, the length of "h" shall be

computed to the centerline of the combination, including the space separating the two panels. The area to be used when determining the post size shall be the total area of the two panels.

Each tubular aluminum post shall be equipped with an aluminum cap and base. The anchor bolts are installed as detailed on Standard Drawing SI-12. Foundation details are shown on Standard Drawing SI-21.

c. Parkway - Multi-Timber Post / Pole

Many of the standard signs are of such a size they require two or more timber posts or poles as indicated on Exhibits 2-402 and 2-403. Further, contract signs of a certain size may also require a similar multi-pole support system.

The number of posts or poles required to support any sign panel is dependent on the width and height of the panel. In order to keep the stresses in the horizontal stringers, which hold the sheet sections together, within allowable limits, limiting panel sizes are shown on Exhibits 2-402 and 2-403 for either 2 or 3 pole mounting systems. To assist the Engineer in determining the proper size and number of poles to use on any particular ground mounted installation, the Tables on Exhibit 2-402 and 2-403 have been provided.

For sign areas greater than 50 sq. ft. and less than 100 sq. ft. timber posts shall be used in accordance with Exhibit 2-402. Having the values of “H” and “W” of the sign panel, the Engineer can than use the tables for determining the number of posts, size of the posts, as well as the depth of post embedment.

For sign areas greater than 100 sq. ft., timber poles shall be used in accordance with Exhibit 2-403. Once the number of poles required to support the panel has been determined, the Engineer shall calculate “A”. This dimension “A” is the height of the longest pole used on that installation. It is measured from the underside of sign panel to ground level. In determining “A”, the Engineer shall assume that the ground outside of the berm area slopes 1 foot vertically for every 2 feet horizontally, unless there is information available to substantiate using a flatter or a steeper side slope.

Having the values of “H” and “W” of the sign panel, the Engineer can then use the Tables on Exhibits 2-403 for determining the number of poles, Class of timber pole as well as the depth and size of foundation embedments to be used on that installation.

On any ground mounted sign installation which will have two sign panels, one mounted above the other, the height of “H” shall be taken as combination of both sign heights, including the space separating the two panels. The area to be used when determining the post size shall be the total area of the two panels.

2. Overhead Type Structures

a. Span-type Sign Structures

Turnpike Sign Structures General Criteria

These are to be used to support signs such that the panels hang directly over the roadway lane to which the sign applies. The layout of the sign structure shall be in accordance with Exhibits 2-405 to 2-407. *As depicted on these exhibits, the centerline of the end frame and foundation shall be placed in the median between any adjacent roadways whenever possible and practical. The use of single span sign structures* ***that*** *span over multiple mainline roadways is prohibited. Additionally, sign structures located in any adjacent roadways shall be spaced apart, or staggered, a minimum of 35' - 0" measured centerline to centerline of end frames in a direction parallel to traffic.*

Span-type sign structures shall be four chord box trusses of cylindrical tubes supported on tubular trussed end frames. The box truss shall support the signs. Standard Drawings are provided for aluminum and weathering steel structures. Only weathering steel sign structures shall be permitted. Aluminum Standard Drawings are for reference, only when performing work on pre-existing aluminum sign structures.

The Standard Drawings for the span-type sign structures provide three (3) standard heights of end frames and six (6) standard lengths for box truss sections. Span lengths from 45 ft. to 135 ft., in increments of 5 ft., may be obtained by using the standard box truss sections in appropriate combinations, as indicated on the Standard Drawings. Sign structure spans shall be set in increments of 5 ft. wherever possible. Where this is not possible, the standard truss sections shall be combined with a minimum number of special sections to obtain the necessary length.

The signs shall be placed vertically on the box truss to provide 17 ft. 0 in. minimum and 18 ft. 0 in. maximum underclearance over the high point of the roadway. The 17 ft. 0 in. clearance shall be the normal sign positions as long as the top chord of the box truss is covered as detailed on Standard Drawing SI-16A. The standard end frame sections shown on the Standard Drawings shall be used wherever possible; where they cannot be used, the Engineer shall design a special end frame of the required height.

Parkway Sign Structures General Criteria

These are to be used to support signs such that the panels hang directly over the roadway lane to which the sign applies. The layout of the sign structure shall be in accordance with Exhibits 2-409 to 2-411. As depicted on these exhibits, the centerline of the end frame and foundation shall be placed in the median between any adjacent roadways whenever possible and practical. The use of single span sign structures that span over multiple mainline roadways is prohibited. Additionally, sign structures located in any adjacent roadways shall be spaced apart, or staggered, a minimum of 35' - 0" or the height of the end frame, whichever is greater, measured centerline to centerline of end frames in a direction parallel to traffic.

Span-type sign structures shall be the Vierendeel single plane or double plane truss of rectangular tubes supported on rectangular tubular trussed end frames. The truss shall support the signs. Only weathering steel sign structures shall be permitted.

Standard Drawings for Parkway span-type sign structures are available as Standard Drawings SI-28 through SI-34, SI-39, SI-40 and SI-42.

A minimum underclearance of 17 ft. 0 in. over the high point of the roadway shall be provided for all sign structures. The signs shall be centered vertically on the truss. The end frame will accommodate signs up to 18 ft. high.

b. Cantilever-type Sign Structures

Turnpike Sign Structures General Criteria

This type of sign structure is used to support guide signs adjacent to deceleration lanes in the vicinity of ramp gore areas and may also be used to support overhead signing on narrow roadways and ramps. The sign panel should be located over the lane to which the message applies. The layout of the sign structure shall be in accordance with Exhibit 2-408.

The structure shall have an arm consisting of a plane truss of cylindrical tubes cantilevering from a single pipe column. The truss shall support the signs. Standard Drawings, SI-18A and B are provided for a weathering steel structure.

The sign shall be placed vertically on the trussed cantilever arm to provide 17 ft. 0 in. minimum and 18 ft. 0 in. maximum underclearance over the high point of the roadway that occurs beneath the area covered by the bottom chord of the structure. The Standard Drawing, SI-17A provides three (3) standard heights of end support. These standard end supports shall be used wherever possible; where they cannot be used, the Engineer shall design a special end post of the required height.

The length of the trussed cantilever arm is not standardized but shall be detailed to suit the width of the sign proposed to be mounted on the arm. *The sign panel shall extend to 6 in. beyond the outer edge of the arm.*

Parkway Sign Structures General Criteria

This type of sign structure is used to support guide signs adjacent to deceleration lanes in the vicinity of ramp gore areas and may also be used to support overhead signing on narrow roadways and ramps. The sign panel should be located over the lane to which the message applies. The layout of the sign structure shall be in accordance with Exhibit 2-412.

The structure shall have an arm consisting of two rectangular tubes of a plane Vierendeel truss cantilevering from a single rectangular column. The truss shall support the signs. Only weathering steel sign structures shall be permitted.

A minimum underclearance of 17 ft. 0 in. over the high point of the roadway shall be provided for all sign structures. The sign shall be centered vertically on the trussed cantilever arm. *Standard Drawings for Parkway cantilever sign structures are available as Standard Drawings SI-28 through SI-34, SI-39, SI-40 and SI-42.*

The length of the trussed and simple cantilever arms shall be detailed to suit the width of the sign proposed to be mounted on the arm. *The sign panel shall extend to 6 in. beyond the outer edge of the arm.*

c. Butterfly-type Sign Structures
This type of sign structure is used to support signs on the Turnpike and Parkway between a pair of adjacent roadways carrying traffic in the same direction. With the approval of the Authority's Engineering Department, a butterfly type structure may be used at the nose of a ramp split and other locations required by design where the use of a span-type structure is not feasible. Structural details of this type of sign structure are similar to cantilever-type sign structures except that cantilever arms are provided on each side of the support post. The layout of the sign structure shall be in accordance with Exhibit 2-408.

d. Bridge-Mounted Signs
Bridge mounted sign structures are not preferable. Where a proposed location for a sign structure falls upon a bridge or viaduct, the Engineer shall first attempt to move the planned location of the structure off the bridge. Where this cannot be accomplished, the sign structure shall either be mounted on one of the bridge substructure units or on separate foundations carried down to the ground alongside the bridge. Only as a last resort and only with written approval of the Authority's Engineering Department shall the sign structure be mounted on the bridge superstructure, in which case it shall be located as close as possible to a bearing. Under no circumstances may a bridge mounted sign or associated appurtenances extend below the bottom flange of the fascia beam of the structure to which it is attached.

Bridge-mounted signs may include any sign type except variable message signs/changeable message signs. The Engineer shall design the appropriate sign attachment details and submit them with calculations to the Authority's Engineering Department for approval. The sign structure components shall be galvanized unless otherwise approved by the Authority's Engineering Department.

2.5.2 Overhead Sign Structure Design

The design of overhead sign structures shall be in accordance with the current edition of the AASHTO Standard Specifications for Structural Supports for Highway Signs, Luminaries and Traffic Signals. Standard Drawings are available for span-type, cantilever and butterfly sign structures for the Turnpike roadways, and these designs shall be used wherever possible within the limits of span and loading noted on the drawings. Where special designs are necessary, the Engineer shall use components and details of the standard sign structures to the fullest extent possible.

All foundations for Turnpike and Parkway sign structures shall have the bottom of the base plate, shown as "Elevation A, AL or AR" on Exhibit 2-405 to 2-412 and "Elevation A" Standard Drawings SI-14 through SI-41, set at 4 ft. 0 in. higher than the highest point of the roadway cross section at the transverse centerline of the structure. The top elevation shall be the same for both pedestals. Sign structures pedestals may be constructed on three types of foundations; spread footing, driven pile supported footing, or drilled shafts. Where spread footings or driven pile supported footings are to be used, the elevation of sign structure foundations shall be set so that the soil cover over the top of the footing at the centerline of the stem shall be at least 4 ft. Where these footings are located in embankment slopes, the minimum cover at the outside of the footings shall be 2 ft. Where it is deemed appropriate to found sign structure pedestals on drilled shafts, the bottom of the pedestal shall be min. 2 ft. below grade.

Foundations for sign structures shall be designed by the Engineer and shall generally conform to the details shown on Standard Drawings SI-22 for spread footing and pile foundations. Differences in Parkway sign structure pedestal dimensions must be accommodated in the design of spread footings and pile foundations. Drilled Shaft foundations shall conform to the details shown on Standard Drawings SI-22A, SI-22B and SI-39 through SI-41. The dead loads and wind loads defined below may be used for foundation design of overhead sign structures. The loading combinations given in the AASHTO Specification, Table 3-1, shall be used for the design of sign structure foundations. Where foundations are to be constructed adjacent to existing Turnpike or Parkway pavement, including shoulders, the width of the foundation shall preferably be that which will not require the removal of paved shoulders for its construction. When excavation for a spread footing or pile bearing footing is required adjacent to Turnpike or Parkway pavement, these excavations shall be protected by steel sheet piling which shall be left in place. When determining the most cost effective foundation type, the cost of the sheet piling to remain, if required, shall be considered by the Engineer.

The maximum allowable soil bearing pressure under sign structure footings founded in fill shall be 3 ksf under the effects of combinations of gravity and wind loads, unless soils investigations indicate that a higher bearing pressure can be safely sustained by the soil. The 3 ksf bearing pressure allowed

under these circumstances shall not be increased as provided for by in Table 3-1 of the AASHTO Specification. In accordance with Sections 5 of both the Authority's Procedures Manual and the Design Manual, a soils investigation shall be conducted for all foundations in existing ground and a Geotechnical Engineering Report shall be submitted. In areas where the maximum allowable soils pressure is less than 3 ksf, the footing shall be founded on a pile foundation or drilled shafts of 30 in minimum diameter, with the required analysis and recommendations included in the Geotechnical Engineering Report. Shaft diameters and spacing shall account for clearance requirements between the sign structure anchor bolts/anchor plates and the shaft reinforcement, as well as the shaft construction tolerances.

The stability of the foundation against overturning shall be checked. The ratio of the overturning moment divided by the righting moment shall be computed for each principal axis of the foundation. Usually, the directions of the principal axes of the foundation will be normal to the face of the signs and parallel to the face of the signs. The sum of the computed ratios in these two directions shall not exceed two-thirds.

Where footings carry eccentric gravity loads, as will be the case for cantilever signs, the net vertical force and overturning moment at the centerline of the footing shall be computed. This computed overturning moment of the gravity loads shall be added to the overturning moment of the wind loads. The righting moment of the gravity loads shall be taken about the outer edge of the footing or the outer row of piles, whichever is applicable. Drilled shaft foundations, where deemed appropriate, shall consider the above noted eccentric loads at the top of pedestal elevation where it meets the vertical centerline of the drilled shaft. The effects of torsion shall be considered in the foundation design of all butterfly and cantilever structures.

1. Loadings for Design

Turnpike Sign Structures

The following sign areas shall be used for the design of foundations for Turnpike sign structures constructed in accordance with the Standard Drawings and conforming to the limits of span and loading shown on the drawings. Where spans or installed sign areas exceed these values, a special sign structure shall be designed or the standard design shall be checked for the actual span and loading. In this case, sign areas used for design shall consider the actual signs intended for use on the structure, but in no case shall the area used for design be less than that provided below.

The foundations of standard Turnpike span-type sign structures shall be designed for a band of signs having a length extending over the entire width of the roadway plus shoulders and having a height equal to the maximum height of sign that can be accommodated by the end frame of the sign structure. The maximum area of sign that need be used for design is 800 square ft. Where the area of sign computed as provided above exceeds this limit, the total area shall be kept at 800 square ft. by reducing the band length. Where the actual sign panel(s) width x length is unknown, the most conservative Wind Drag Coefficient (Cd) for sign panels shall be selected from Table 3-6 *of the AASHTO Specification*.

The foundations for standard Turnpike cantilever-type sign structures shall be designed for a band of signs having a length of 18 ft. 9 in. and a height equal to the maximum height that can be accommodated on the sign structure. The arm from the centerline of this sign to the centerline of the end post shall be assumed to be 23 ft.

The following dead loads may be used for the components of standard Turnpike specific sign structures:

Steel box truss:	
Span up to 100 ft:	125 lbs. per ft.
Span greater than 100 ft:	145 lbs. per ft.
Aluminum box truss (For analysis of existing structures only):	
Span up to 100 ft:	60 lbs. per ft.
Span greater than 100 ft:	70 lbs. per ft.
Steel cantilever flat truss arm	190 lbs. per ft.
Aluminum end frame (For analysis of existing structures only):	
24 ft. 9 in. high:	1,600 lbs.
27 ft. 3 in. high:	1,900 lbs.
Steel end frames:	
22 ft. 6 in. high	***2,400 lbs.***
24 ft. 9 in. high:	3,000 lbs.
27 ft. 3 in. high:	3,700 lbs.
Cantilever end posts (Steel):	
22 ft. 6 in. high	***3,700 lbs.***
24 ft. 6 in. high:	4,000 lbs.
26 ft. 6 in. high:	4,800 lbs.
Signs (including sign stringers):	
Flat sign panel:	3 lbs. per sq. ft.
Emergency speed warning signs:	10 lbs. per sq. ft.
Changeable message signs:	25 lbs. per sq. ft.

Walkways, hangers, railings and luminaires***: (For analysis of existing structures only):***

Walkway for Fixed Message Sign (FMS) Panels	61 lbs. per ft. @ 3.0 ft.**
Walkways for Variable Message Sign (VMS) Panels:	81 lbs. per ft. @ 3.4 ft.**
Walkways for FMS/VMS Structures	87 lbs per ft. @ 3.2 ft**
Walkway for emergency speed warning signs	63 lbs. per ft. @ 3.4 ft.**
Walkway for changeable message signs	71 lbs. per ft. @ 3.9 ft.**
Hangers, luminaire supports,	

luminaries for cantilever structures	40 lbs. per ft. @ 2.7 ft.**

** Note: These dimensions are the distance from the centroid of the walkway to the outside face of the truss chord. Where walkways are provided without luminaires, 11 lbs. per ft. should be deducted from the weight given.

Walkways (hangers, railings, etc.) not at sign locations: ***(For analysis of existing structures only):***

Walkway for Fixed Message Sign (FMS) Panels	58 lbs. per ft. @ 2.4 ft.**
Walkways for Variable Message Sign (VMS) Panels	67 lbs. per ft. @ 3.1 ft.**
Walkways for FMS/VMS Structures	71 lbs per ft. @ 3.0 ft**

** Note: These dimensions are the distance from the centroid of the walkway to the outside face of the truss chord. Where walkways are provided with luminaires, 11 lbs. per ft. should be added from the load given.

Parkway Sign Structures

Standard Drawings for the Parkway span-type and cantilever sign structures are available. The Authority shall provide Engineers with applicable sign structure details for butterfly sign structures on a project by project basis, and the Engineer shall design butterfly sign structures for all Parkway structures to accommodate the following design criteria:

Luminaires, catwalks, and, associated appurtenances shall not be provided on Parkway sign structures unless directed otherwise by the Authority.

All Parkway signs structures shall provide adequate under clearance and design strength to allow for a provisional sign panel height of 18-0”.
For span type structures, the length of this provisional sign panel shall be no less than 40% of the sign structure span and need not be greater than 80% of the sign structure span, unless required by original design. The span of the sign structure shall be measured from centerline of end post to centerline of end post. Under no circumstances shall any span type sign structure be designed for less than 800 square feet of sign area.

For cantilever type sign structures, the provisional sign panel area shall extend from 6” beyond the outer edge of the cantilever arm to the edge of pavement, maintaining 2’-0” minimum from the centerline of the rectangular column. In cases where the provisional sign panel are cannot extend to the edge of pavement without exceeding the limits shown on the Standard Drawings, the provisional sign area may be reduced upon approval of the Authority. The revised provisional sign area shall be indicated on

the individual Sign Structure General Plan and Elevation plan sheet. Under no circumstances shall any cantilever type sign structure be designed for less than 300 square feet of sign area, or any butterfly type of sign structure be designed for less than 500 square feet of sign area.

All Contract Drawings prepared for Parkway Signs shall have the design sign area clearly published on the General Plan and Elevation plan sheet.

The following Loading shall be used for all Turnpike and Parkway Sign Structure Designs.

Primary Wind Load

Basic Wind Speed as defined in Section 3.8.2 of the AASHTO Specification shall be defined as a minimum of 110 mph for all Turnpike and Parkway sign structures. Wind loading shall be considered on all sign structure elements that are not directly shielded from wind by sign panels, including but not limited to: exposed trusses, end frames, luminaires, walkway grating, hand railing (in folded down position) and exposed support hangers.

Wind Drag Coefficients, C_d, shall be determined in accordance with Table 3.6 of the AASHTO Specification. Where the exact dimensions of a sign panel or sign structure element cannot be determined, the Engineer shall select the most conservative Drag Coefficient available for the most appropriate element type denoted in Table 3-6 of the AASHTO Specification. When determining the Wind Drag Coefficient for square shaped tubular truss members, the radius (r) denoted in Table 3-6 of the AASHTO Specification may be assumed as twice the thickness of the square shaped tubular member.

The Height and Exposure Factor, K_Z, shall be no less than 0.94 for all parts of the sign structure under normal exposure. Higher values of K_Z shall be considered, in accordance with Table 3-5 of the AASHTO Specification, when structures are situated in abnormally exposed conditions on high embankments or on bridge piers or superstructures. The standard designs have been prepared using a value of K_Z of 1.0. The Engineer shall check the design of the standard sign structures for the particular use intended wherever it is determined that a higher value of the K_Z is appropriate.

The Wind Importance Factor and Velocity Conversion Factors defined in Tables 3-2 and 3-4 of the AASHTO Specification shall consider a 50 year design life, unless otherwise directed by the Authority.

Ice Load

Ice load shall be considered as 3.0 PSF and shall be applied as directed in Section 3.7 of the AASHTO Specification. For the purposes of placing ice loading on walkway grating, the horizontal area of the walkway grating shall be considered as solid with uniform ice loading on the top and bottom surfaces, only. Given the conservative nature of this loading, additional ice loading need not be considered on walkway hangers or walkway appurtenances such as hand railing and luminaires. Where luminaires are

present on structures without walkway grating, ice loading on hangers and walkway appurtenances shall be considered.

Fatigue Loading

Fatigue loading shall be considered for all span type, cantilever and butterfly sign structures. Dead loads and Ice loads shall not be considered to act in addition to the specific event fatigue loading. The Importance Factor for all fatigue wind loads shall be taken as 1.0

Specific Event Fatigue Loads

Galloping

Galloping induced wind loading shall be applied vertically and over the same area as is used to determine the primary wind load design force. Galloping need only be considered for cantilever/butterfly type structures.

Vortex Shedding

Fatigue loading induced by vortex shedding need not be considered for the design of span type or cantilever/butterfly structures.

Natural Wind Gust

Natural wind gust loading shall be applied in the same direction and over the same area as is used to determine the primary wind load design force.

Truck Induced Wind Gust

Truck induced wind gust loading shall be applied vertically over the plan area of the sign structure and associated walkway and lighting appurtenances, if applicable. For the purposes of design, the plan area of walkway grating exposed to truck gust induced wind loading may be assumed to have a 30% solidity ratio. Given the conservative nature of this loading, additional truck induced wind gust loading need not be considered on walkway hangers or walkway appurtenances such as hand railing and luminaires. Where luminaires are present on structures without walkway grating, truck induced wind gust loading on hangers and electrical appurtenances shall be considered.

2.6 LIGHTING

All lighting associated with the illumination of sign panels will be discussed in Section 7 of this Manual.

All light standards placed on structures shall be designed in accordance with the current edition of the AASHTO Standard Specifications for Structural Supports for Highway Signs, Luminaires, and Traffic Signals. These light standards will not be classified as common poles and therefore fatigue design in accordance with Section 11 of the above noted reference shall be performed for all bridge mounted light pole design.

Designers shall consult with light standard vendors during the design process. Vendors shall be informed that their light standard products may be used on

structures. The Designer shall consult with the vendor and provide information as may be requested by the vendor to ensure that their products will perform adequately for the full length of the 25 year light standard design life on the structure(s) when considering strength, fatigue and necessary dampening. Only those vendors issuing written letters of conformity with the above provisions shall be listed in the contract specifications.

Lighting features placed on structures shall be located at or near piers and abutments. When locating the lighting features at piers or abutments is not practical, the maximum offset from a pier or abutment bearing line shall be 25% of the length of the span in which the lighting features is to be located. Refer to Section 7 of this Manual to determine bridge lighting requirements.

2.7 NOISE BARRIERS

2.7.1 Preliminary Considerations

The Engineer shall obtain preliminary information necessary for the design of noise barriers from the Authority. This information will include the following:

1. Types of noise barriers to be used
2. Required height, length and offset for noise abatement
3. Architectural treatments.

Refer to Subsection 2.7.2 for more information concerning preferred types of noise barriers and architectural treatments.

In general, the Authority is responsible for determining the types of noise barriers and the architectural treatments of noise barriers along with the required height, length and offset of noise barriers for noise abatement.

The Engineer shall notify the State's One Call System, identify and verify all existing utility and fiber-optic conduits in the vicinity of the proposed noise barrier wall alignment. If any existing facility interferes with the noise barrier, the Authority's Engineering Department shall be contacted for possible relocation of the existing elements or realignment of the noise barrier as appropriate.

2.7.2 Design Criteria

The AASHTO Guide Specifications for the Structural Design of Sound Barriers, with current Interims, shall be used. The allowable stress design method (working stress design method and a 90 mph wind design speed) shall be used for all components of noise barriers.

Design criteria for the noise barrier structural components, not specifically herein addressed, shall conform to applicable Sections of the AASHTO Standard Specifications for Highway Bridges, with current interims. For new bridge superstructure components supporting noise barrier, design criteria shall conform to applicable Sections of the AASHTO LRFD Specifications, with current interims, as modified by Subsection 2.2.

The Tables listed in the AASHTO Guide Specifications shall be referred to for determining the design category and the design wind pressure, P, for the design of noise barriers.

Notes:

1. Adjoining ground surface shall be defined as the ground elevation (or water elevation) immediately adjacent to the structure. In situations where noise barriers are mounted on bridges and retaining walls, the height to be utilized in determining the design wind pressure, P, shall be taken from the lowest average ground or water elevation adjacent to the noise barrier, to the centroid of the loaded area.
2. C_c refers to the combined height, exposure and location coefficient.

2.7.3 Load Combinations

The following are load groups to which the noise barriers may be subjected. Each part of the noise barrier structure shall be proportioned for the load combinations. Foundations shall be proportioned according to Subsection 2.7.4.

Dead Loads
Wind Loads
Seismic Loads
Earth Loads
Traffic Loads
Ice and Snow Loads
Bridge Loads

The AASHTO *Guide Specifications for Structural Design of Sound Barriers* shall be used to determine the loading combinations for ground mounted noise barrier components.

The ASSHTO *LRFD Bridge Design Specifications*, current edition, with interims, shall be used to determine the loads and loading combinations for noise barriers mounted to existing or new bridge structures.

The AASHO *Standard Specifications for Structural Supports for Highway Signs, Luminaries, and Traffic Signals,* current edition shall be used to determine the loads and loading combinations for noise barriers mounted to specially designed noise barrier support structures.

The following information for seismic loads shall be referenced when considering seismic load combinations for ground mounted noise barrier structural components or for noise barriers mounted to specially designed noise barrier support structures. Seismic loads and load combinations for design of bridge mounted noise barriers shall be in accordance with the AASHTO *LRFD Bridge Design Specifications,* fifth edition.

Seismic Loads

The seismic dead load, EQD, in the following formula shall be computed as follows:

EQD = A x f x D

Where: EQD = Seismic dead load
D = Dead load of noise barrier, excluding foundations
A = Acceleration coefficient (as per Subsection 2.2.6)
f = Dead load coefficient (as shown below)

f	
0.75	Dead load, except on bridges
2.50	Dead load, on bridges
8.0	Dead load for connections of walls, not cast in place, to bridges
5.0	Dead loads for connections of walls, not cast in place, to retaining walls

The dead load shall consist of the weight of all the component materials making up the noise barrier, excluding the foundation. The point of application of the Seismic Dead Load, EQD, of the individual components shall be at their respective centers of gravity.

When a noise barrier is supported by a bridge superstructure, the wind or seismic load to be transferred to the superstructure and substructure of the bridge shall be as specified herein. As noted below, additional steel support framing and/or additional reinforcement may be required in concrete barrier curbs and deck slab overhangs to resist the loads transferred by the noise barrier.

2.7.4 Functional Requirements:

1. Guide rail or concrete barrier curb shall be installed when the noise barrier is located within the clear zone (see Section 1A and 1B of this Manual for more information).

2. Stopping sight distance criteria shall apply in determining the location of a noise barrier. Horizontal clearances which reduce the stopping sight distance shall be avoided. In those extreme cases where reduced stopping sight distances may be warranted, justification shall be provided and approval from the Authority's Engineering Department shall be obtained to justify the need.

3. Noise Barrier Heights - Noise barrier heights shall be established based on noise studies performed by the Authority and in accordance with the Authority's Noise Barrier Policy.

4. Consideration of surrounding features should be evaluated such that a high wall does not create an unsightly impact on the environmental aesthetic features of the territory.

5. When the tops of noise walls have to be stepped, the maximum height of step should not exceed 2 feet.

6. Barriers can obstruct light as well as noise. Special consideration shall be given to possible roadway icing and other induced environmental conditions caused by the placement of the noise barrier wall.

7. It is important to have drainage facilities along noise barriers to assure soil stability. Soil with phi (ϕ) angles of 25 degrees or less may develop flowing characteristics when saturated. Surface runoffs should be directed away from the noise barrier.

8. Provisions may be necessary to allow access to fire hydrants on the opposite side of the noise barrier. The Engineer should consult with local fire and emergency officials regarding their specific needs.

9. For noise barriers that bridge conduits, provisions should be made to accommodate differential settlement in the noise barriers substructures.

10. Noise barriers shall be designed to retain all anticipated differential fills plus an additional 2 feet of soil as a minimum.

11. The Phase A Submission for noise barriers shall include a report to address the possibility of icing, the storage of snow, utilities impact, drainage, mounting on culverts or bridges and the issues discussed in Items 4, 5, 6, 7 and 8 above.

2.7.5 Maintenance Considerations:

1. Noise barriers placed within the area between the shoulder and right of way line may complicate the ongoing maintenance and landscaping operations, especially if landscaping is placed on both sides of the noise barrier. Consideration should be given to maintaining the adjoining land behind the noise barrier and adjacent to the right of way line.

2. In some urban areas, noise barriers may be subjected to graffiti being placed on their surfaces. In these locations, the surface texture selected should be such that it is difficult to place the graffiti or such that the graffiti is easily removed. Noise barriers with rough textures and dark colors tend to discourage graffiti.

3. Access to the back side of the noise barrier should be provided for inspection, litter control, soil erosion monitoring, grass mowing, drainage repairs, maintenance, etc. In subdivision or residential areas, access may be via local streets, when available. If access is not available via local streets, openings in the noise barriers shall be provided as follows:
    - Openings shall be provided at a spacing of 1,000 feet measured along the roadway; maintenance openings are not required for noise barriers with lengths shorter than 1,000 feet that can provide access to the residential side from one of the ends
    - Location of the access openings should be coordinated with the appropriate agency or landowner
    - Offset barriers concealing the access opening must be overlapped a minimum of 4 times the offset distance in order to maintain the integrity of the noise attenuation of the main barrier

- The offset of the barriers shall allow for a 12'- 0" wide vehicular gate
- This gate or the barrier end shall be accessible from the right shoulder and not be obstructed by beam guide rail or barrier parapet
- The ground leading to the gate or noise barrier end, as well as the ground behind the noise barrier, shall be graded to allow for maintenance vehicle access.

Application of this subsection shall be required as part of the project Phase B submission. At locations where the criteria cannot be accommodated, submit documentation of concerns and questions for discussion with the Authority.

2.7.6 Noise Barriers on Bridges:

1. Provisions for expansion shall be placed in the noise barrier at locations of bridge deck expansion joints and at parapet deflection joints.

2. When a noise barrier with a height up to 16 feet is designed to be supported by a new bridge superstructure, the attachment to the superstructure shall be made to the concrete parapet or directly to the superstructure framing. When designing for wall attachments to the concrete parapet, the mechanical behaviors of the bridge superstructure framing and the deck slab overhang shall be analyzed, including the effects of the torsional moments and twist caused by the weight of the noise barrier and wind load. The distribution of the superimposed noise barrier dead load (non-light weight panels and posts) on the superstructure's three outside girders / stringers shall not be determined in a manner of 50% to the fascia girder/stringer, 35% to the first interior girder/stringer and 15% to the second interior girder/stringer, as described in Subsection 2.2.2. A 3-dimensional analysis of the bridge superstructure shall be performed in order to determine the effective superimposed dead load and wind load distribution to the superstructure elements.

   When a noise barrier with a height over 16 feet and up to 25 feet is designed to be supported by a new bridge superstructure, the noise barrier structure shall be directly supported by the superstructure framing. A 3-dimensional analysis of the bridge superstructure shall be performed. The noise barrier panels made of lightweight materials are strongly recommended.

3. For noise barrier retrofit onto existing bridges, the noise barrier wall adds a significant amount of stress on the bridge superstructure caused by the additional weight and rotational loading for which the existing structure may not have been originally designed. The Engineer must perform a complete 3-dimensional analysis of the bridge superstructure, and verify that the dead, live load and wind load from the wall do not overstress any component of the bridge including the existing parapets, slab overhang, girders and superstructure or substructure members. The analysis may

result in need to strengthen the existing superstructure (i.e. installation of additional full depth diaphragms, girder/stringer cover plates, etc.).

Both the dead load of noise barriers and the wind load on the noise barriers can affect the overload capacity and deflection of some existing bridges. The effects of the torsional moments and twist shall be included. The Engineer must check the change in the load capacity of the bridge and verify whether the change is acceptable.

2.7.7 Types of Barriers

1. Precast reinforced concrete post and panel systems are preferred to be used, except on bridge structures; however, if unusual site conditions prohibit the use of a post and panel system, another noise barrier type may be considered (such as aluminum or lightweight proprietary systems for noise barrier on bridges). Determination of the type of barrier and architectural treatments to be used at a site prior to the design of the barrier will be made by the Authority. The Engineer shall obtain the necessary information regarding barrier type and architectural treatments from the Authority's Engineering Department and shall refine and incorporate this information into the design.

2. In most cases, foundations for noise barriers shall be drilled shafts; however, in cases where shallow rock formations exist, spread footings may be unavoidable. The Engineer shall select the most cost-effective foundation based on a thorough geotechnical investigation. Noise barriers on bridges shall be mounted on the parapets, attached directly behind the parapet, or directly supported by the superstructure framing.

   In a bridge retrofit or rehabilitation situation, where it is determined that the existing or rehabilitated structure cannot accommodate the noise barrier loading, a separate supporting structure for the noise barrier may be considered. Sound leakage between the parapet and noise barrier shall be prevented by the use of flashing or other mechanical means.

3. A number of proprietary noise barrier systems are available for use on bridges or where unusual site conditions prohibit the use of a precast reinforced concrete post and panel system. The materials, load carrying mechanisms and capabilities vary with each system; however, these systems shall conform to the criteria outlined in Subsection 2.7.1 and applicable project Special Provisions. Proprietary wall systems shall be approved prior to the design of the barrier.

2.7.8 Materials

1. *Concrete for cast in place foundations and precast / prestressed posts and panels shall conform to the Standard Specifications.* ***Class P concrete shall be used for precast elements.*** *Class B concrete shall be used for pedestals. Class C concrete shall be used for foundations other than drilled shafts. Class A or SCC concrete shall be used for drilled shaft foundations.*

   SCC shall be considered for use in drilled shafts where:

- *Deep excavations may otherwise promote aggregate separation.*
- *Congested reinforcing bar placement may restrict the free flow of plastic concrete.*
- *Vibrating of the plastic concrete is not possible or practical.*
- *Placement in wet conditions (tremie placement) which would require a highly plastic concrete mixture to more completely displace ambient ground water.*

Any use of SCC concrete shall be reviewed with the Authority's Project Engineer prior to inclusion in the Contract Documents.

2. Reinforcing steel shall conform to ASTM A615, Grade 60, fs =24 ksi. ASTM A706, Grade 60 may be used for reinforcement in foundations.

   Welded wire fabric fabricated from deformed wire may be substituted for reinforcing bars in noise barrier panels only. Refer to the Standard Specifications for additional criteria concerning the use of welded wire fabric reinforcement.

   The provision of corrosion protected reinforcement shall be as determined on a project to project basis. The location of the noise barrier panels, in relationship to the offset distance from the roadway, shall be evaluated to determine if provision of corrosion protected reinforcement is warranted.

   If the location of the noise barrier panels may subject the panels to splashing from the roadway surface, provision of corros ion protected reinforcement, should be recommended. In such cases, the panels anticipated to be affected by this splashing should be scheduled for placement of corrosion protected reinforcement.

3. Allowable stresses for aluminum shall conform to the current edition of the Aluminum Association Specifications for Aluminum Structures. The allowable stresses pertaining to bridge structures shall be utilized.

2.7.9 Foundation Design

1. The method of design for drilled shaft foundations shall be approved, or as directed, by the Authority's Engineering Department. Acceptable methods shall include Broms Theory and approved computer methods of analysis such as COM624P and LPILE. The lateral load determined by the Controlling Group Load Case and from Section 20, Subsection I.C shall be applied to the noise barrier and shall be multiplied by a factor of 2 to obtain F, the applied lateral load. The intent of this procedure is to maintain a factor of safety of 2 against overturning. The allowable overstresses referenced in the Section 20, Subsection I.B publications should not be applied to the allowable soil strength.

2. Special Requirements for Sloped Soil Conditions
   As stated in Appendix C, Part B of the AASHTO Guide Specifications for the Structural Design of Sound Barriers, a level ground condition is defined as one in which the ground surface is approximately level or,

when sloping down and away from the drilled shaft foundation, is not steeper than 1:10 (V:H) for phi (ϕ) = 35 degrees or 1:14 (V:H) for phi (ϕ) = 25 degrees. When these conditions prevail within a distance of two times the drilled shaft foundation embedment, the ground may be considered level, regardless of steeper slopes outside these limits.

Drilled shafts located in slopes shall be protected by a berm that shall be level and provide a minimum cover of 12 inches over the drilled shaft. It shall extend a minimum of 12 inches beyond the face of the drilled shaft.

Sloped soil conditions shall be taken into account when computing the required embedment length for drilled shaft foundations.

3. A foundation report shall be submitted for noise barriers in accordance with Section 5 of this Manual.

2.8 BRIDGE REPAIR CONTRACTS

Each year the Authority plans several structural repair contracts that are funded out of their Capital Budget program. The structural repair contracts have included but are not necessarily limited to: concrete deck replacements; repair or reconstruction of deteriorated concrete in decks, superstructure and substructure elements; repairing or replacing bridge deck joints; repair or reconstruction of damaged structural elements; realignment of expansion bearings; strengthening, repair or replacement of deteriorated structural steel and safety improvements to structures.

2.8.1 Format and Content

Information contained on the title sheet shall be as described in Section 6A of the Procedures Manual. The title of the contract shall include the mile post limits which bracket the bridge work sites. The typical arrangement of information presented on the Title Sheet below the New Jersey Turnpike / Garden State Parkway banner is as follows:

CONTRACT NO. T100.010

BRIDGE DECK REPAIRS AND RESURFACING

MILE 83 TO MILE 117

AND THE NEWARK BAY — HUDSON COUNTY EXTENSION

The index of drawings on the Title Sheet shall be sufficiently detailed so as to identify and locate every rehabilitation plan for each structure being affected by the Contract.
The Plan format will vary depending upon the type of work to be done; however, a General Location Plan and an Estimate of Quantities must be included. For contracts involving a number of structure sites throughout the Turnpike and Parkway, the Location Plan is to be a strip map upon which each site has been indexed with its appropriate Structure Number. The Estimate of Quantities is an item-by-item tabulation of pay items for each structure site and includes a column for the insertion of "As-Built" quantities. A separate tabulation of items concerning Maintenance and Protection of Traffic for the total contract will also be given.

Due to the unique nature of repair contracts, the Standard Legend Sheet is not usually applicable; a legend with the special symbols and general notes pertaining to the specific contract at hand shall be included.

As a minimum, a general plan of every structure affected shall be included in the Contract. The scale shall be no less than 1"=50' preferably 1"=30' or 1"=20'. Where applicable, the following data is to be furnished:

1. Abutment bearing lines and pier centerlines.

2. Turnpike/Parkway continuous stationing at each substructure element.

3. North Arrow

4. Lane lines and direction of travel

5. Proposed work areas

6. Drainage facilities

7. Utilities

8. Railroads tracks and right of way lines; each track shall be identified by the railroad line and branch number and structure number where applicable.

9. Pertinent existing topographic and planimeter features which may have an affect on the proposed work.

10. Vehicular detector loops/pavement sensors for weather system.

Maintenance and protection of traffic plans shall also show Mileposts.

Inasmuch as repair plans require details of existing construction of many bridges, a considerable number of reference drawings may be involved. It has been the practice not to include all reference drawings of affected structures as part of the plans, but to include only those reference drawings necessary to determine the extent of work for the bidding process. Contract specifications should identify applicable drawings which may be examined by prospective bidders or obtained by the Contractor from the Authority after award.

In the preparation of repair contracts, considerable thought and planning must be given to the maintenance and protection of traffic at, over, under and adjacent to work sites. It is imperative that arrangements given in Contract Documents for traffic and construction staging, including permissible work times, lane closing, and type of protection devices, be closely coordinated with the Authority's Operations Department. Reference is made to the NJTA Supplementary Standard Specifications for the Authorities general guidelines and construction requirements. Engineers will be required to revise the supplementary specifications on a project by project basis to properly encompass the work.

It is required that, when arranging traffic protection on or over facilities owned by other agencies, including railroads, the Authority's Engineering Department be provided with written statements attesting that all responsible agencies have been informed of the work and have reviewed and concur with the planned schemes for maintaining and protecting traffic on or over their facilities. The Authority's Engineering Department shall also be provided with written statements attesting that all affected utilities have been informed of the work, reviewed and concur with the planned schemes for protecting their facilities. In scheduling plan preparation, time must be allotted for review by these agencies. The concurrence of these agencies must be obtained in writing.

2.8.2 Deck Replacement Contracts

2.8.2.1 Details and Design

Slab replacements for deteriorated decks shall ordinarily span between stringer centerlines. The length of replacement will have been determined by field inspection. The replacement slab shall be constructed, where possible, with permanent steel bridge deck forms.

Deck slab replacements shall be designed in accordance with Subsection 2.2.4.2.

When the longitudinal limit of the replacement does not occur over an existing diaphragm, the Plans shall provide for new intermediate diaphragms of steel or reinforced concrete to provide edge support for the replacement slab where it abuts the existing slab.

The details shall include the following:

1. For each site, a bridge deck plan upon which the anticipated limits of each replacement are outlined with respect to the lane lines of the traveled roadways and substructure elements. Each deck replacement location shall be identified by the lane to be closed in order to conduct the construction. If the replacement requires a concrete and debris catch and/or steel protection plates, it shall be indicated.

2. Cross-sections shall show the replacement slab with its new reinforcement and splices to existing bars. This view shall show the corrugations of the steel deck forms and dimensions which position the bars with respect to the top and bottom concrete surface.

3. Diaphragm details

4. Details for replacements which abut deck joints.

5. Schedule of slab replacement designs by structure site.

6. Traffic protection details and/or Detour Routes.

The design of the permanent metal bridge deck forms shall be the Contractor's responsibility. Requirements governing the selection, design and fastening of the forms shall be set forth in the contract specification. Shop drawings shall be furnished by the Contractor showing design, details and connections.

The Contractor is responsible for the design and details of the concrete and debris catch. Most agencies, railroads, utility companies, etc., which have facilities that are spanned by the affected structure, have specific requirements for catch design. Catches are required to protect structures, building, houses, utilities, streets, railroads, traffic, waterways, recreational and storage areas located beneath the work sites.

2.8.2.2 Traffic Protection

In planning the sequencing of slab replacements within a bridge deck, consideration must be given to the maintenance and protection of traffic (MPT).

The Plans shall show the required staging of construction and traffic by sectional views which illustrate the available traffic lanes and slab replacements in each stage. In general, replacement shall be sequenced such that on bridges carrying mainline roadways of the Turnpike or Parkway, one lane may be closed for construction but a minimum of two traffic lanes must be available in every stage in each direction. For example, the Turnpike's Hudson County Extension is a two-lane roadway in each direction. Two traffic lanes must be maintained when conducting slab replacement. This is accomplished by using the right shoulder as a traffic lane during construction. It is

noted that the Parkway has areas where there are no shoulders. Traffic protection within these areas requiring slab replacements may require the reduction for the number of lanes over short durations/weekends and shall be reviewed on project by project basis.

On Turnpike roadways and ramps, lane and shoulder closings for slab replacement work will be done in accordance with standard procedures as outlined in the “TP” series of Standard Drawings. Lane and shoulder closings in interchange areas, ramps and mixing bowl areas may require special details and arrangements of traffic protection devices which must be given on the Plans. On Parkway roadways and ramps, lane and shoulder closings for slab replacement work will be done in accordance with standard procedures as outlined in the Garden State Parkway Traffic Manual and MUTCD and details and arrangements of traffic protection devices must be given on the Plans.

In general on contracts for Turnpike and Parkway roadways and ramps, the Contractor will generally install the lane closings and certain shoulder closings, and will install and maintain the all of the MPT device, as required.

When planning slab replacements on bridges over Turnpike or Parkway, where the Authority is responsible for maintenance of the bridge, maintenance and protection of traffic will be governed by the agency with jurisdiction over traffic. Full detailed plans of the various stages of construction and of the traffic control devices required shall be included in the Contract plans. These plans must be approved by the governing agency before insertion into the Contract. Maintenance and protection of traffic on a roadway under an agency jurisdiction other than the Turnpike/Parkway is paid for as a lump sum item and shall include all costs incurred for traffic and safety personnel, materials and equipment that may be required by the agency having jurisdiction. The Contractor will be responsible for installing and maintaining traffic control devices for all non-NJTA roadways.

On Turnpike and Parkway roadways and ramps, traffic protection for deck replacements consists of placing a continuous line of temporary precast concrete construction barriers as detailed on Standard Drawing TP-13 and TP-14. If the parapet is being replaced with the deck slab or the median barrier between opposing directions of travel on Turnpike/Parkway roadways is being replaced, traffic protection shall consist of a continuous line of precast concrete construction barrier, shielded at the entry end with a temporary impact attenuator such as an array of sand barrels. Precast concrete construction barrier and temporary impact attenuator shall be placed in accordance with the latest FHWA recommendations and shall be detailed in the Plans.

The Engineer shall strive to maintain the standard 12 ft traffic lane, if possible. When lane width reductions are necessary, 11 ft minimum travel lane is desirable with 10’-6” being the absolute minimum

allowed at an isolated location and only with the approval of the Authority's Operation Department. On Turnpike/Parkway ramps, 10 ft travel lane width is the absolute minimum, but this should only be used in long straight away sections. The minimum width to use for ramps on curves shall be that which can be safely traversed by tractor-trailers.

In some cases, minimum ramp lane widths cannot be met without some modifications to the ramp due to the stringer spacing. In these cases, a temporary beam shall be constructed and the deck replacement done in two separate stages to maintain traffic.

At locations where there are several deck replacements in a longitudinal row, such as adjacent to the fascia or median or within a continuous span unit, the deck replacements shall be staggered in substages. This is due to the sequence of placing concrete in continuous spans or the inability of the cantilever parapet or median section to support itself in proper position when the adjacent slab is removed.

At some locations in two lane roadways (mainly Newark Bay-Hudson County Extension), the existing stringer spacing precludes the use of standard procedures for maintaining two lanes of traffic. In these instances, steel plates are used to protect newly placed concrete deck replacement until sufficient time has elapsed for curing in order to maintain two lanes of traffic. During periods of lower traffic volumes, mainly weekends, two lanes are closed to traffic. The existing slab is removed and the new concrete slab is placed and cured approximately 18 hours prior to the placement of steel protection plates and precast concrete construction barrier allowing the reopening of a second lane to traffic**.** The following weekend, the roadway is again reduced to one lane of traffic; the steel protection plates are removed and membrane waterproofing and asphalt concrete bridge surfacing is placed over the replacement area and the roadway is then completely opened to traffic.

2.8.2.3 Repair of Spalls

Contracts for deck replacements include items for the repair of deck spalls. Except for the estimated and as-built quantities, the tabulation of repaired locations will not be required. In accordance with the NJTA Standard Specifications and the Standard Drawings RE-5 and RE-6, the following spall repairs shall typically be specified:

Spall Repair, Type 1	Removal of concrete in deck and replacement with non-shrink high strength mortar.
Spall Repair, Type 2	Removal of existing surfacing, waterproofing membrane, and concrete in deck and replacement with non-shrink high strength mortar, waterproofing membrane, and HMA bridge surfacing.

Spall Repair, Type 3 Removal of concrete in deck and replacement with a modified epoxy mortar.

Spall Repair, Type 4 Removal of full depth concrete deck slab adjacent to filled or armored deck joint and replacement with Class A concrete mix capable of obtaining a 3,000 psi minimum compressive strength within 24 hours and which contains a water reducing admixture conforming to NJTA Standard Specifications.

Spall Repair, Type 5 Removal of concrete in deck and replacement with nonshrink, high early strength mortar. Spall repair Type 5 shall be used only where called for or expressly authorized in writing by the Engineer.

Spall Repair, Type 6 Removal to full depth of concrete slab and replacement with Class A concrete mix capable of obtaining a minimum compressive strength of 3,000 psi within 24 hours, and which contains a water-reducing admixture. The type of admixture, as directed by the Engineer, shall conform to NJTA Standard Specifications.

The item Removal of Existing Surfacing is generally specified for bridge decks in areas where the asphalt surfacing is showing evidence of cracking or possible deterioration of the underlying concrete (spalling). This item typically consists of the removal of large areas, usually a lane width wide and joint to joint of a span, of deteriorated bridge asphalt surfacing. Any removal of existing bridge surfacing greater than four square yards in size is paid for under this item.

The item of Removal and Replacement of Existing Surfacing is specified for individual areas and when Spall Repair, Type 2 is called for. In general, these areas are less than four square yards in size.

Headblock Repairs consists of the reconstruction with concrete of existing abutment headblocks that are spalled or deteriorated or have been surfaced over with asphalt. Care must be taken during the removal of existing concrete to not displace or damage the joint armoring and other embedded steelwork. The various types of headblock repairs are dependent upon the configuration of the headblock and/or the depth of concrete removal.

Generally at locations where the existing bridge surfacing has been removed abutting the deck joints, the headers are reconstructed using materials other than asphalt. The type of joint reconstruction varies depending upon the configuration of the joint, depth of removal of the existing material and the replacement materials used. After the new

asphalt bridge surfacing has been placed and compacted, a sawcut is made parallel to the joint armoring and the material between the armoring and the sawcut is removed. The new header material is then placed and cured as per the manufacturer's instructions.

The original Turnpike bridges were designed and built with bare concrete decks. In subsequent years, the decks received an overlay of a waterproofing material and asphalt. In order to maintain the height of the overlay at deck joints, a thin steel bar was welded to the top of the joint armoring. The item Pavement Riser Repair consist of removing and replacing these damaged steel bars atop the joint armoring. The work is done in conjunction with the reconstruction of the joint headers.

2.8.2.4 Pay Items and Quantities

The following are some of the items associated with deck replacement contracts:

Deck Repair/Replacement Pay Items	Unit
HMA Bridge Surfacing	Ton
Membrane Waterproofing	Sq. Yd.
Reinforcement Steel, Epoxy Coated	Lbs.
Drill And Grout Reinforcement Bars	Each
Concrete Deck Replacement	Sq. Yd.
Concrete Deck Replacement with Catches	Sq. Yd.
Concrete Deck Replacement with Steel Plates	Sq. Yd.
Permanent Metal Form Removal	Sq. Yd.
Diaphragms	Each
Joint Reconstruction, Type _____	Lin. Ft.
Pavement Riser Repair	Lin. Ft.
Removal Of Asphalt Surfacing And Scarify Concrete	Sq. Yd.
Removal of Existing Surfacing	Sq. Yd.
Removal and Replacement of Existing Surfacing	Sq. Ft.
Spall Repair, Type _____	Sq. Ft.
Deck Haunch Repair	Sq. Ft.
Headblock Repair, Type _____	Lin. Ft.
Joint Sealer (Eva)	Lin. Ft.
Joint Seal Replacement, Type _____	Lin. Ft.
Emergency Concrete Deck Replacement	Sq. Yd.
Emergency Pavement Replacement	Sq. Yd.
Emergency Spall Repair, Type _____	Sq. Ft.
Emergency Head Block Repair	Lin. Ft.
Emergency Joint Reconstruction, Type _____	Lin. Ft.
Removal Of Sip Metal Forms	Sq. Yd.
Dowel Bar Removal	Each
Pavement Striping White, ____"Wide	Lin. Ft.
Pavement Striping Yellow, ____"Wide	Lin. Ft.

The above are to be tabulated on a per structure basis. This is usually done by a distribution of quantities type table which is to be located near the front of a Contract.

Turnpike Traffic Protection Pay Items	Unit
Picking Up and Returning Authority's Traffic Protection Devices	Lump Sum
Placing and Removing Concrete Barrier	Lin. Ft.
Install, Maintain and Remove Supplementary Lane Closings	Each
Temporary Pavement Striping	Lin. Ft.
Uniformed Flagmen	Man hrs.
Maintenance and Protection of Traffic on ____	Lump Sum
Variable Message Sign	Each
Truck and Attenuator	Each
Furnish Variable Message Sign	Each
Furnishing Temporary Impact Attenuator	Each
Placing and Removing Temporary Impact attenuator	Each
Resetting Concrete Barrier	Lin. Ft.

Parkway Traffic Protection Pay Items	Unit
Furnishing Traffic Control Devices	Lump Sum
Traffic Directors	Man hrs.
Precast Concrete Curb Construction Barrier	Lin. Ft.
Temporary Crash Cushion, Frangible Module Type	Unit
Police Traffic Directors	Man hrs

Individual items for furnishing all MPT devices will be required when it has been determined in advance that such devices are not available from the Authority.

The above are to be tabulated for the entire Contract.

2.8.3 Miscellaneous Structural Repair Contracts

Miscellaneous structural repair contracts are basically catchall for the repair of bridges. The work can consist of the repair of deteriorated or damaged concrete in piers, abutments, bearing pads, parapets, median barrier, curbs and safetywalks; waterproofing concrete surfaces of abutments, piers, pier caps and bridge seats; repairing cracks in structural concrete; repairing and resetting or replacing bridge bearings; repairing or replacing damaged or deteriorated structural steel, and replacing dowels, sole plates and masonry plates.

Work locations are generally labeled by a directional and/or numbering convention. The Plans shall indicate the numbering convention used in the general notes. Typically, the Turnpike's numbering convention is from west to east or south to north; for example, Stringer S-4 would be the fourth stringer, including the fascia stringer, from either the west or south. A few bridges, Structure Nos. E107.87, E109.83, W107.88 and N2.01, violate this numbering convention, but on the whole, most bridges have their various structural elements numbered in this fashion.

2.8.3.1 Traffic Protection

In planning the various repairs, consideration must be given to access of the work site and, if needed, to the maintenance of traffic.

On Turnpike roadways and ramps, lane and shoulder closings for repair work will be done in accordance with standard procedures as outlined in the “TP” series of Standard Drawings. Lane and shoulder closings in interchange areas, ramps and mixing bowl areas may require special details and arrangements of traffic protection devices which must be given on the Plans. On Parkway roadways and ramps, lane and shoulder closings for repair work will be done in accordance with standard procedures as outlined in the Garden State Parkway Traffic Manual and MUTCD and details and arrangements of traffic protection devices must be given on the Plans.

In general, the Contractor will install the lane closings and certain shoulder closings on Turnpike and Parkway roadways and ramps for miscellaneous repair contracts.

When the Contractor’s operations affect non-NJTA roadways and railroads, the Contractor must first receive approval and comply with the regulation of the agency with jurisdiction over the traffic.

2.8.3.2 Pay items and Quantities

The following are some of the items associated with miscellaneous structural repair contracts:

Bridge Repair Pay Items	Unit
Drill And Grout Reinforcement Bars	Each
Repair Spalled Concrete, Type____ - Abutment	Sq. Ft.
Repair Spalled Concrete, Type ___ - Pier	Sq. Ft.
Repair Spalled Concrete - Underwater	Sq. Ft.
Repair Spalled Concrete - Bearing Pads	Each
Sidewalk, Parapet And Curb Surface Repairs	Sq. Ft.
Epoxy Resin Injection	Lin. Ft.
Furnish Epoxy Resin	Gal.
Replace Structural Steel Diaphragm	Lump Sum
Repair Of Structural Steel	Lump Sum
Repair Of Structural Steel, Type ___	Lump Sum
Repair Bearing Area - Abutment	Each
Repair Bearing Area - Pier	Each
Repair Bearing, Rocker	Each
Epoxy Resin Injection - Pier	Lin. Ft.
Furnish Epoxy Resin - Pier	Gal.
Epoxy Resin Injection - Abutment	Lin. Ft.
Furnish Epoxy Resin - Abutment	Gal.
Repair Bearing, Rocker - Abutment	Each
Repair Bearing, Rocker - Pier	Each
Reconstruct Bearing Area	Each
Repair Bearing, Sliding Plate - Abutment	Each
Repair Bearing, Sliding Plate - Pier	Each

Repair Bearing_____	Each
Reset Bearing	Each
Replace Masonry Plate	Each
Replace Anchor Bolt	Each
Substructure Waterproofing	Sq. Ft.

The above are to be tabulated on a per structure basis.

Traffic protection pay items are similar to those given in Subsection 2.8.2 - Deck Replacement Contracts and are to be tabulated for the entire Contract.

The table on the next page is an example of the descriptive quantity table to appear on each plan sheet of all affected structures within the Contract.

Each location of work on an affected structure shall he noted. This is typically done by labeling each and every work area with a letter(s) designation. The letter is shown on the general plan with a leader pointing to the work area that corresponds to the letter found in the "KEY" row of the descriptive quantity table.

Near the front of the Contract shall be a distribution of quantities type table showing the breakdown of quantities on a per structure basis and also a total quantity for the Contract.

ITEM NO.	ITEM	QUANTITY			
		PLAN	AS-BUILT	KEY	LOCATION DESCRIPTION
4	Repair Spalled Concrete-Abutment	2 SF		A	S. Abutment under S-4 on Brstw
4	Repair Spalled Concrete-Abutment	4 SF		B	S. Abutment near S-7 on Bkw
4	Repair Spalled Concrete-Abutment	4 SF		E	S. Abut top East WW
5	Repair Spalled Concrete-Pier	6 SF		H	P4 E. End Cantilever Faced & Seat
5	Repair Spalled Concrete-Pier	2 SF		AA	P14 N Face under S-4 at Top
8	Epoxy Resin Injection-Pier	10 LF		J	P4 N Face under S-5 at Bottom
8	Epoxy Resin Injection-Pier	15 LF		BB	P15 N Face under S-2 at Top
9	Furnish Epoxy Resin-Pier	2.3 Gal		J	P4 N Face under S-2 at Top
11	Clean and Resent Rockers-Pier	5 Ea.		BB	P15 Face under S-2 of Top
12	Substructure Waterproofing	400 SF		DDD	N. Abut under S-1 thru S-7

2.8.4 Drainage Modifications Contracts

In the course of the years since the various Turnpike/Parkway structures have been constructed, drainage facilities have deteriorated or clogged, design standards have changed; or the area of outfall or discharge has been developed. Thus, there is a need to modify existing drainage facilities.

The original design philosophy for drainage on structure was to place inlets in the gutters uphill of a joint. If the joint can be sealed to prevent runoff from going through the joint, then some inlets can be eliminated. A gutter flow analysis should be run in accordance with Section 4 of this Manual to determine the necessity of the inlets. Inlets that can be eliminated are then plugged with concrete and the discharge piping removed.

Since the original construction of Turnpike and Parkway structures, the area underlying the bridge has been developed. Thus, inlets that are air drop may require piping of the runoff to the ground below and open joints without; troughs may need to have troughs installed to collect the runoff and funnel it to an acceptable discharge point.

Drainage facilities should be designed to be self-cleaning with smooth surfaces and edges to prevent snagging of debris. Sharp bends in the piping often causes debris such as a soda can or cigarette box to snag, which in turn clogs the pipe.

Lately, an elastomeric membrane or sheet has been used in the construction of troughs under open joints. This material offers a smooth surface to prevent snagging and is flexible enough, that under the vibration of the bridge due to traffic, it provides a constant flushing action to remove debris.

Traffic protection shall be similar to that found in Subsection 2.8.3.

2.8.4.1 Pay Items and Quantities

Drainage modification work items are usually unique in nature; they differ from one work site to the other. Most items tend to be lump sum per work site, therefore, no common pay items really exist. Because of the pay items being lump sum, the details should be explicit and fully explain the work to be done.

REFERENCES

1. **AASHTO LRFD Bridge Design Specifications, 4th Ed, with 2008 Interims.**
2. AASHTO LRFD Bridge Construction Specifications, 2nd Ed, with 2006 Interims
3. AASHTO Guide Manual for Condition Evaluation and Load and Resistance Factor Rating of Highway Bridges, 1st Ed., with 2005 Interim Revisions.
4. AASHTO Manual for Condition Evaluation of Bridges, 2nd Edition, with 2003 Interims
5. AASHTO Standard Specifications for Highway Bridges, 17th Edition
6. AASHTO Standard Specifications for Structural Supports for Highway Signs, Luminaires and Traffic Signals, 4th Edition with 2003 Interims
7. AASHTO Guide Specifications for the Structural Design of Sound Barriers, 1st Edition with 2002 Interims

8. AASHTO/AWS D1.5 Bridge Welding Code
9. Guide Specifications for Seismic Isolation Design, 2nd Edition including 2000 interims
10. Stanton, J.F., et al. *Stability of Laminated Elastomeric Bearings*, ASCE Journal of Engineering Mechanics, Vol. 116, No. 6, June 1990.
11. Applied Technology Council, 1997a, *NEHRP Guidelines for the Seismic Rehabilitation of Buildings*, FEMA 273, Washington, D.C.
12. Applied Technology Council, 1997b, *NEHRP Commentary for the Seismic Rehabilitation of Buildings*, FEMA 274, Washington, D.C.
13. Building Seismic Safety Council, 2003a, *NEHRP Recommended Provisions for Seismic Regulations for New Buildings and Other Structures, Part 1 - Provisions*, 2003 Edition, FEMA 450, Washington, D.C.
14. Building Seismic Safety Council, 2003b, *NEHRP Recommended Provisions for Seismic Regulations for New Buildings and Other Structures, Part 2 - Commentary*, 2003 Edition, FEMA 450, Washington, D.C.
15. Federal Highway Administration, *Seismic Retrofitting Manual for Highway Bridges*, 1995 Edition, FHWA-RD-94-052, MacLean, VA.

SERIES 100 – BRIDGE DECK GEOMETRY

EXHIBIT 2 - 100
TURNPIKE BRIDGE DECK GEOMETRY MAINLINE – 1

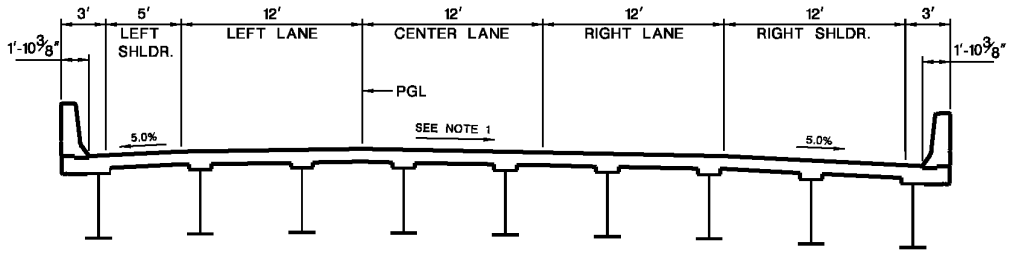

NORMAL SECTION

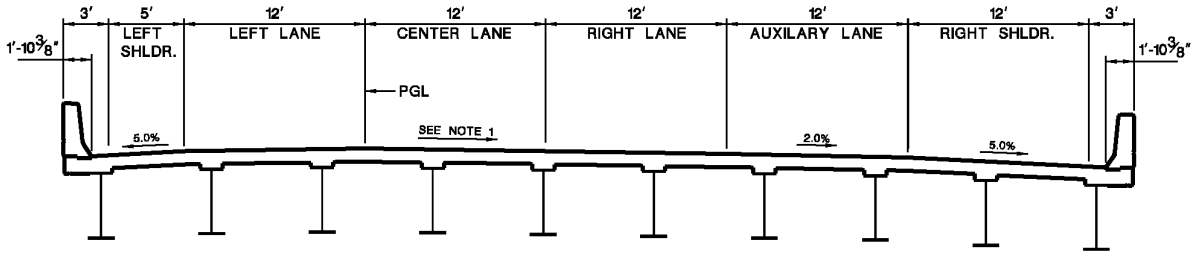

NORMAL SECTION WITH AUXILARY LANE

THREE LANE TURNPIKE ROADWAY
NTS

NOTES:

1. For Longitudinal grades <0.5%, lane cross slopes = 2.0% min.
   For Longitudinal grades ≥0.5%, lane cross slopes = 1.5% min.

2. Sections apply to new construction. Modifications to existing structures will be reviewed on an individual basis.

EXHIBIT 2 - 101
TURNPIKE BRIDGE DECK GEOMETRY MAINLINE – 2

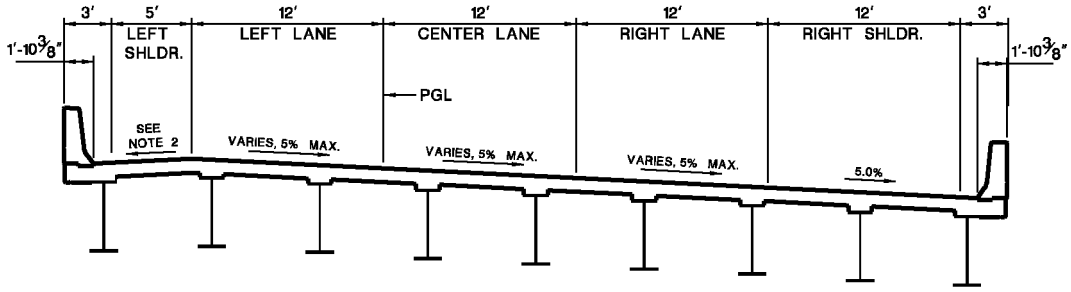

SUPERELEVATED - CURVE RIGHT

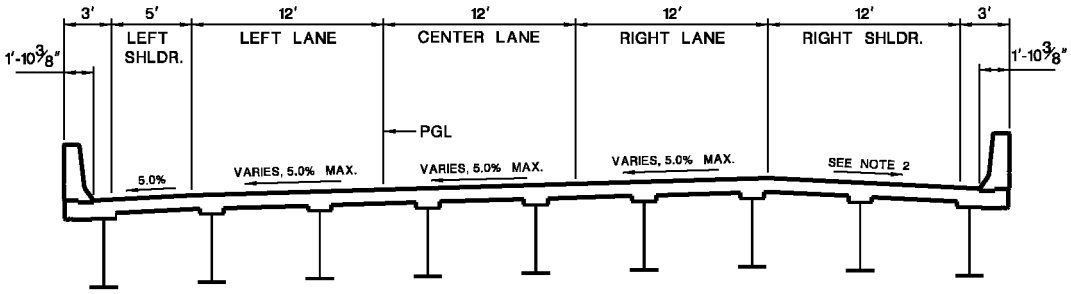

SUPERELEVATED - CURVE LEFT

THREE LANE TURNPIKE ROADWAY

NTS

NOTES:

1. Sections apply to new construction. Modifications to existing structures will be reviewed on an individual basis.

2. For Superelevated lane cross slope ≤3% shoulder cross slope shall be 5% max. For Superelevated lane cross slope >3% to 5% max., shoulder cross slope shall vary from 5% maximum to 3% minimum. Rollover shall not exceed 8% maximum.

EXHIBIT 2 - 102
TURNPIKE BRIDGE DECK GEOMETRY MAINLINE – 3

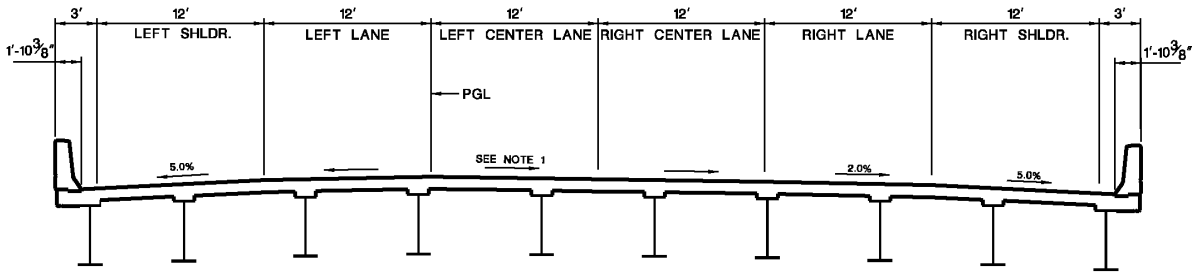

NORMAL SECTION

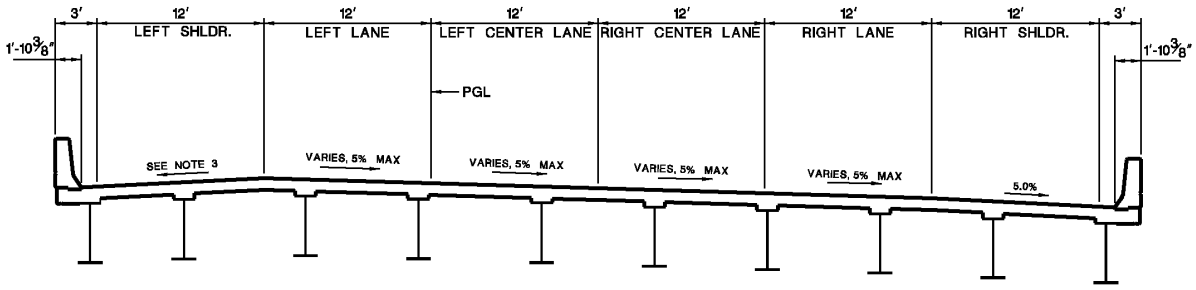

SUPERELEVATED - CURVED RIGHT

FOUR LANE TURNPIKE ROADWAY

NTS

NOTES:

1. For Longitudinal grades <0.5%, lane cross slopes = 2.0% min.
   For Longitudinal grades ≥0.5%, lane cross slopes = 1.5% min.

2. Sections apply to new construction. Modifications to existing structures will be reviewed on an individual basis.

3. For Superelevated lane cross slope <3% shoulder cross slope shall be 5% max.
   For Superelevated lane cross slope >3% to 5% max., shoulder cross slope shall vary from 5% maximum to 3% minimum. Rollover shall not exceed 8% maximum.

EXHIBIT 2 - 103
TURNPIKE BRIDGE DECK GEOMETRY RAMPS – 1

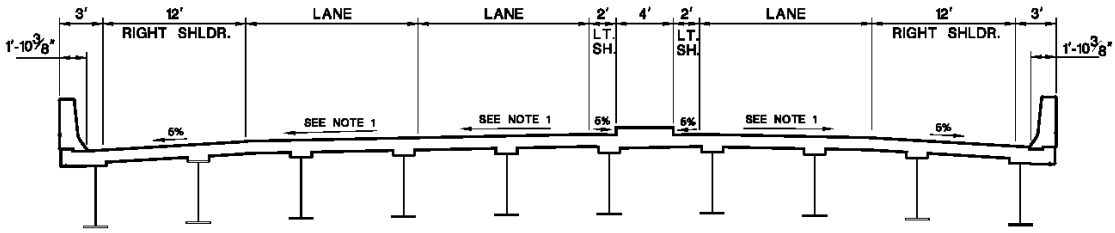

NORMAL SECTION

TWO WAY TURNPIKE RAMPS
NTS

NOTES:

1. For Longitudinal grades <0.5%, lane cross slopes = 2.0% min.
   For Longitudinal grades ≥0.5%, lane cross slopes = 1.5% min.
2. For Roadway widths and cross slopes follow Roadway Standards.
3. Sections apply to new construction. Modifications to existing structures will be reviewed on an individual basis.

EXHIBIT 2 - 104
TURNPIKE BRIDGE DECK GEOMETRY RAMPS – 2

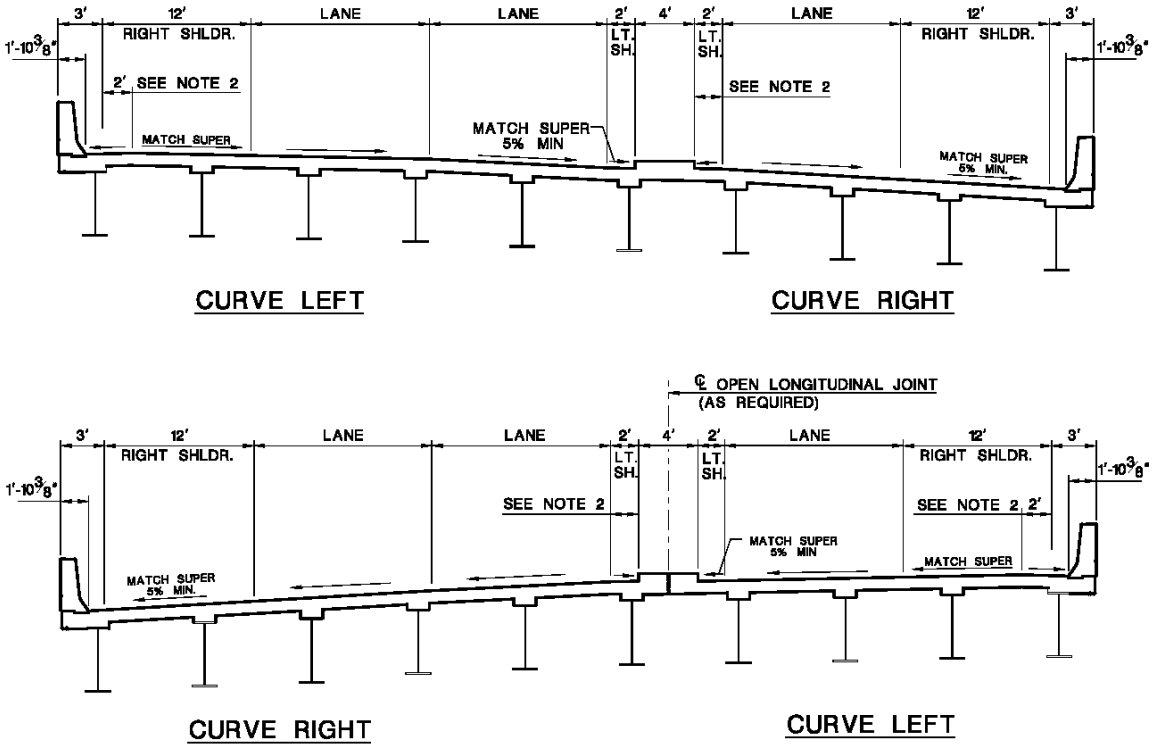

SUPER >3%
TWO WAY TURNPIKE RAMPS
NTS

NOTES:

1. For Roadway widths and cross slopes follow Roadway Standards.
2. For superelevated roadway cross slope >3% to 6% maximum, the shoulder cross slope shall vary from 5% maximum to 2% minimum. Rollover shall not exceed 8% maximum.
3. Sections apply to new construction. Modifications to existing structures will be reviewed on an individual basis.

EXHIBIT 2 - 105
TURNPIKE BRIDGE DECK GEOMETRY RAMPS – 3

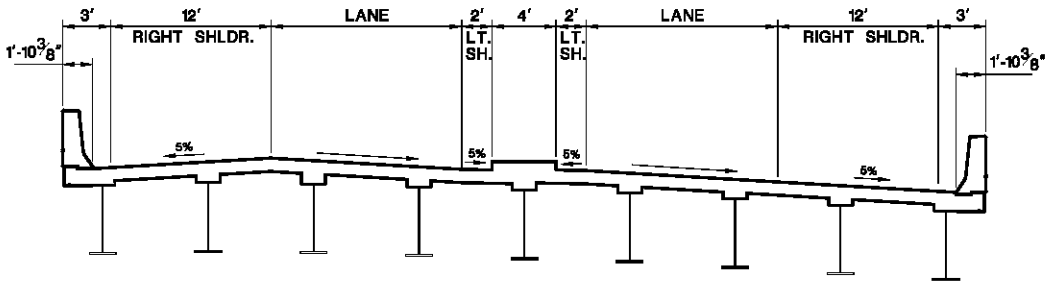

CURVE LEFT CURVE RIGHT

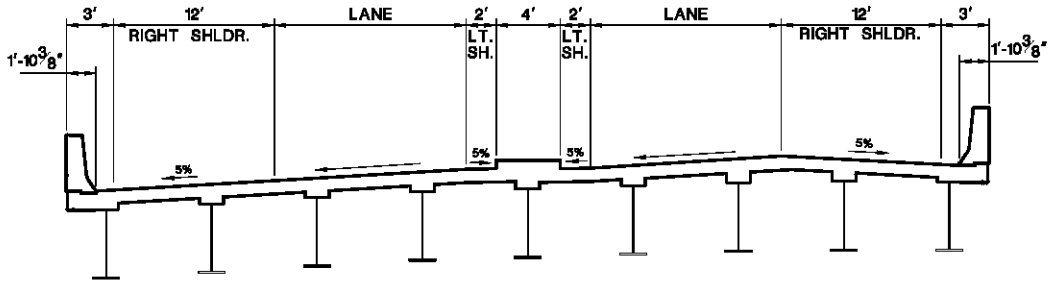

CURVE RIGHT CURVE LEFT

SUPER ≤ 3%

TWO WAY TURNPIKE RAMPS

NTS

NOTES:

1. For Roadway widths and cross slopes follow Roadway Standards.
2. Sections apply to new construction. Modifications to existing structures will be reviewed on an individual basis.

EXHIBIT 2 - 106
TURNPIKE BRIDGE DECK GEOMETRY RAMPS – 4

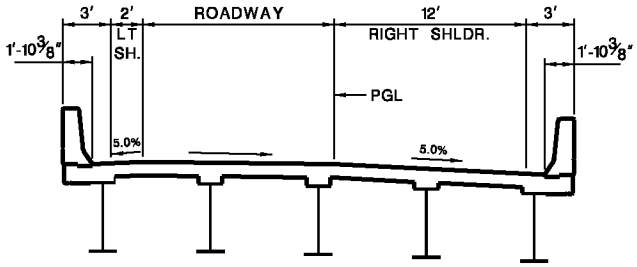

NORMAL SECTION

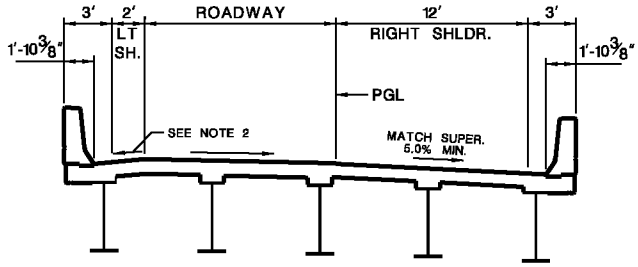

CURVE RIGHT

ONE WAY TURNPIKE RAMPS

NTS

NOTES:

1. For Roadway widths and cross slopes follow Roadway Standards.

2. For superelevated roadway cross slope < 3%, shoulder cross slope = 5%. For superelevated roadway cross slope > 3% to 6% maximum, shoulder cross slope shall vary from 5% maximum to 2% minimum. Rollover shall not exceed 8%.

3. Sections apply to new construction. Modifications to existing structures will be reviewed on an individual basis.

EXHIBIT 2 - 107
TURNPIKE BRIDGE DECK GEOMETRY RAMPS – 5

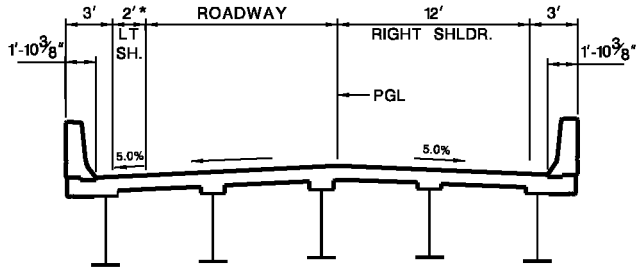

SUPER ≤ 3%

CURVE LEFT

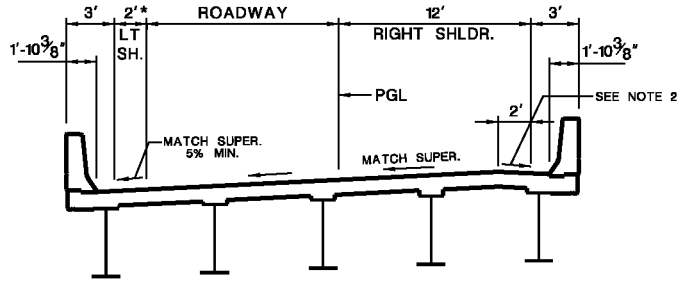

SUPER > 3%

CURVE LEFT

ONE WAY TURNPIKE RAMPS

* WIDEN IF REQUIRED FOR HORIZONTAL SIGHT DISTANCE

NTS

NOTES:

1. For Roadway widths and cross slopes follow Roadway Standards.

2. For superelevated roadway cross slope < 3%, shoulder cross slope = 5%. For superelevated roadway cross slope > 3% to 6% maximum, shoulder cross slope shall vary from 5% maximum to 2% minimum. Rollover shall not exceed 8%.

3. Sections apply to new construction. Modifications to existing structures will be reviewed on an individual basis.

EXHIBIT 2 - 108
PARKWAY BRIDGE DECK GEOMETRY MAINLINE – 1

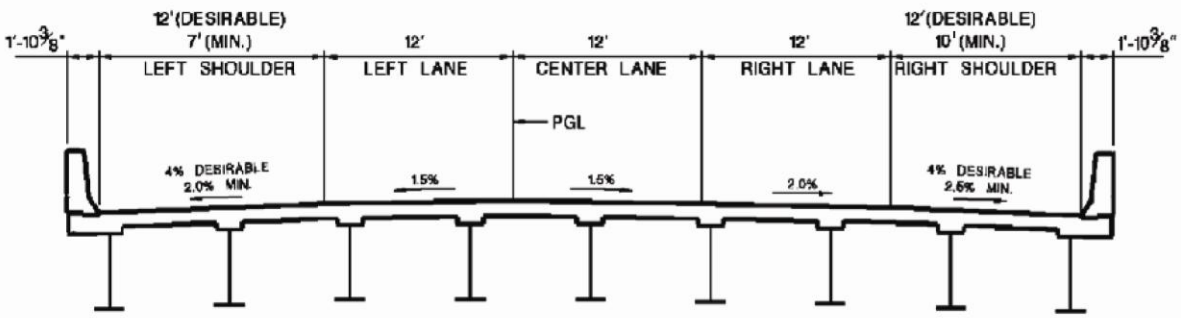

NORMAL SECTION

THREE LANE PARKWAY ROADWAY
NTS

NOTES:

1. Sections apply to new construction. Modifications to existing structures will be reviewed on an individual basis.

EXHIBIT 2 - 109
PARKWAY BRIDGE DECK GEOMETRY MAINLINE – 2

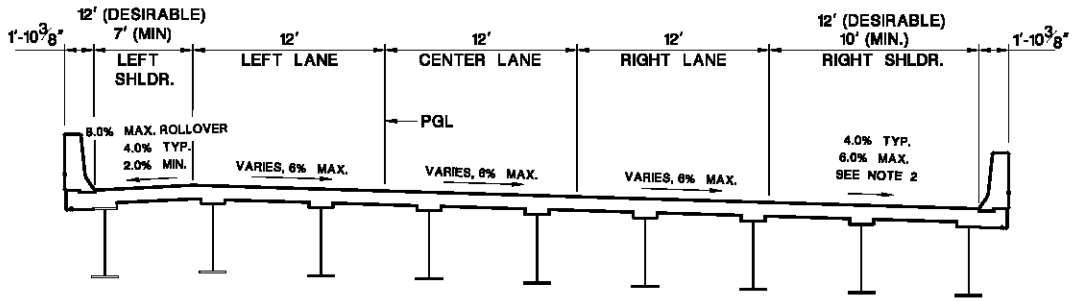

SUPERELEVATED - CURVE RIGHT

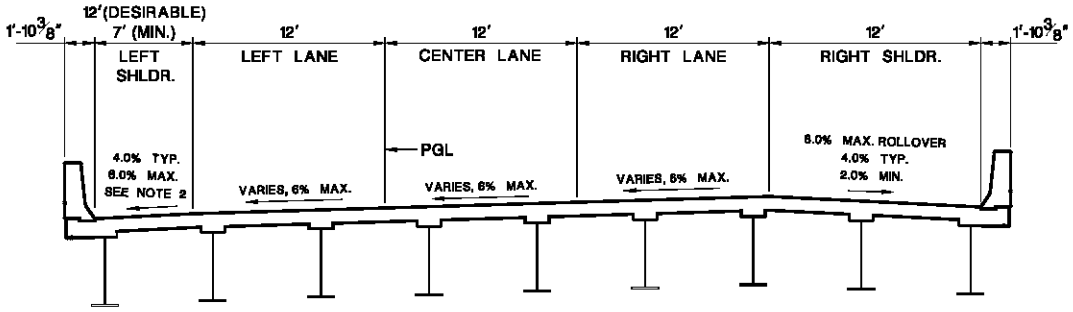

SUPERELEVATED - CURVE LEFT

THREE LANE PARKWAY ROADWAY

NTS

NOTES:

1. Sections apply to new construction. Modifications to existing structures will be reviewed on an individual basis.

2. Shoulder Cross Slope shall match Roadway Cross Slope when Roadway Cross Slope exceeds 4%.

EXHIBIT 2 - 110
PARKWAY BRIDGE DECK GEOMETRY MAINLINE – 3

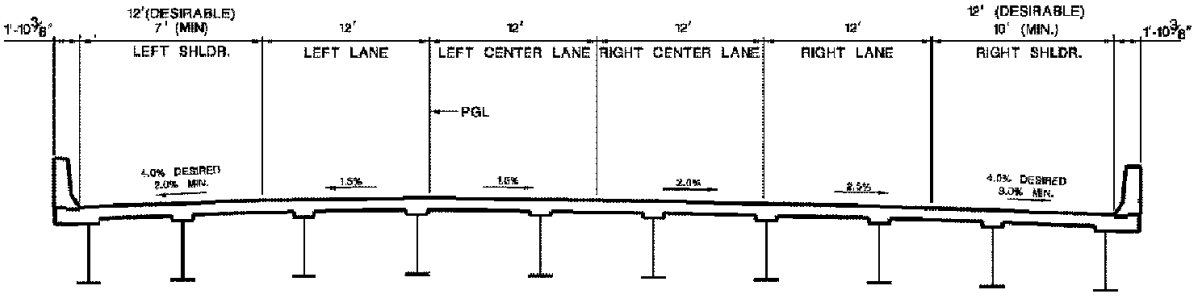

NORMAL SECTION

FOUR LANE PARKWAY ROADWAY

NTS

NOTES:

1. Sections apply to new construction. Modifications to existing structures will be reviewed on an individual basis.

EXHIBIT 2 - 111
PARKWAY BRIDGE DECK GEOMETRY RAMPS – 1

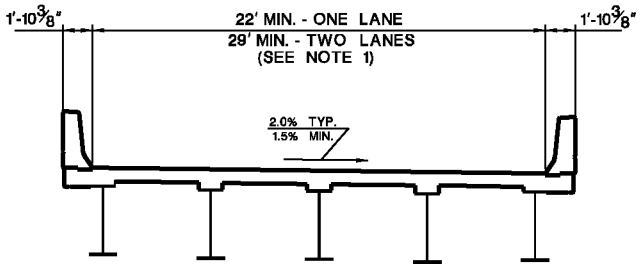

NORMAL SECTION

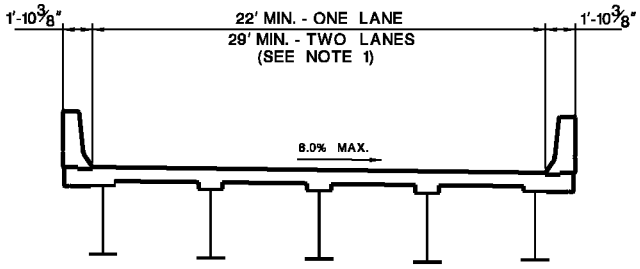

CURVE RIGHT
CURVE LEFT SIMILAR

ONE WAY PARKWAY RAMPS
NTS

NOTES:

1. For roadway widths, shoulder widths and cross slopes follow Roadway Standards.
2. Sections apply to new construction. Modifications to existing structures will be reviewed on an individual basis.

SERIES 200 – SUBSTRUCTURE DETAILS

*EXHIBIT 2 - 200
SUBSTRUCTURE DETAILS – 1

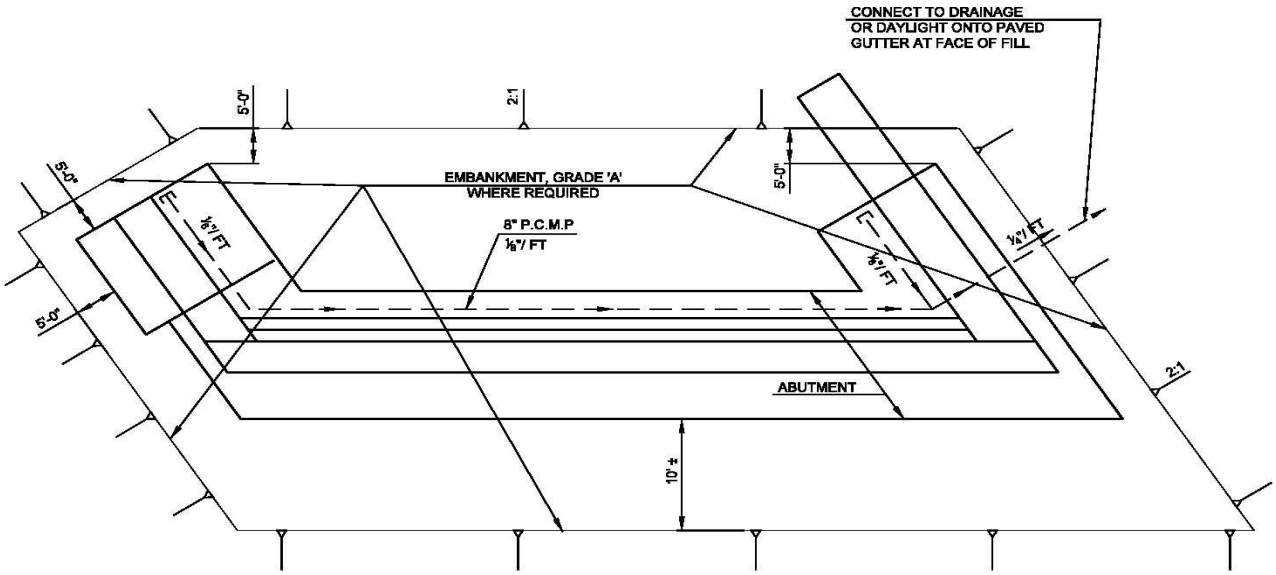

DETAIL 1
CONVENTIONAL ABUTMENT PLAN
NTS

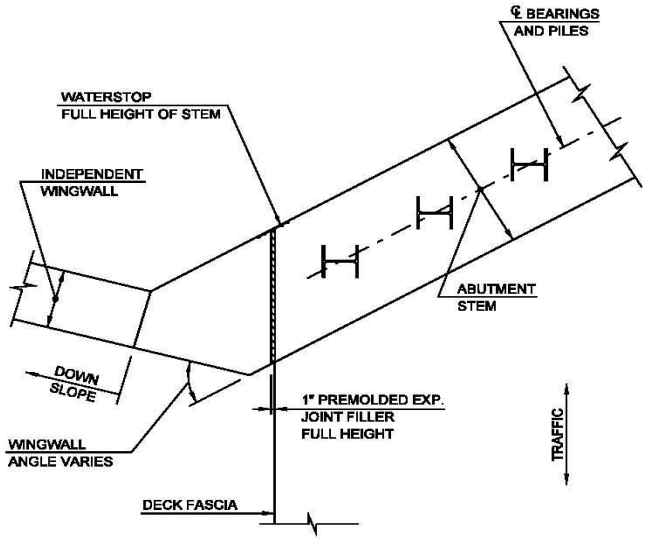

DETAIL 1A
INDEPENDENT CONCRETE WINGWALL
JOINT DETAILS FOR INTEGRAL ABUTMENTS
(FLARED WINGWALLS SHOWN, IN-LINE & U-WALLS SIMILAR)
NTS

***Revised 8-2008**

EXHIBIT 2 - 201
SUBSTRUCTURE DETAILS – 2

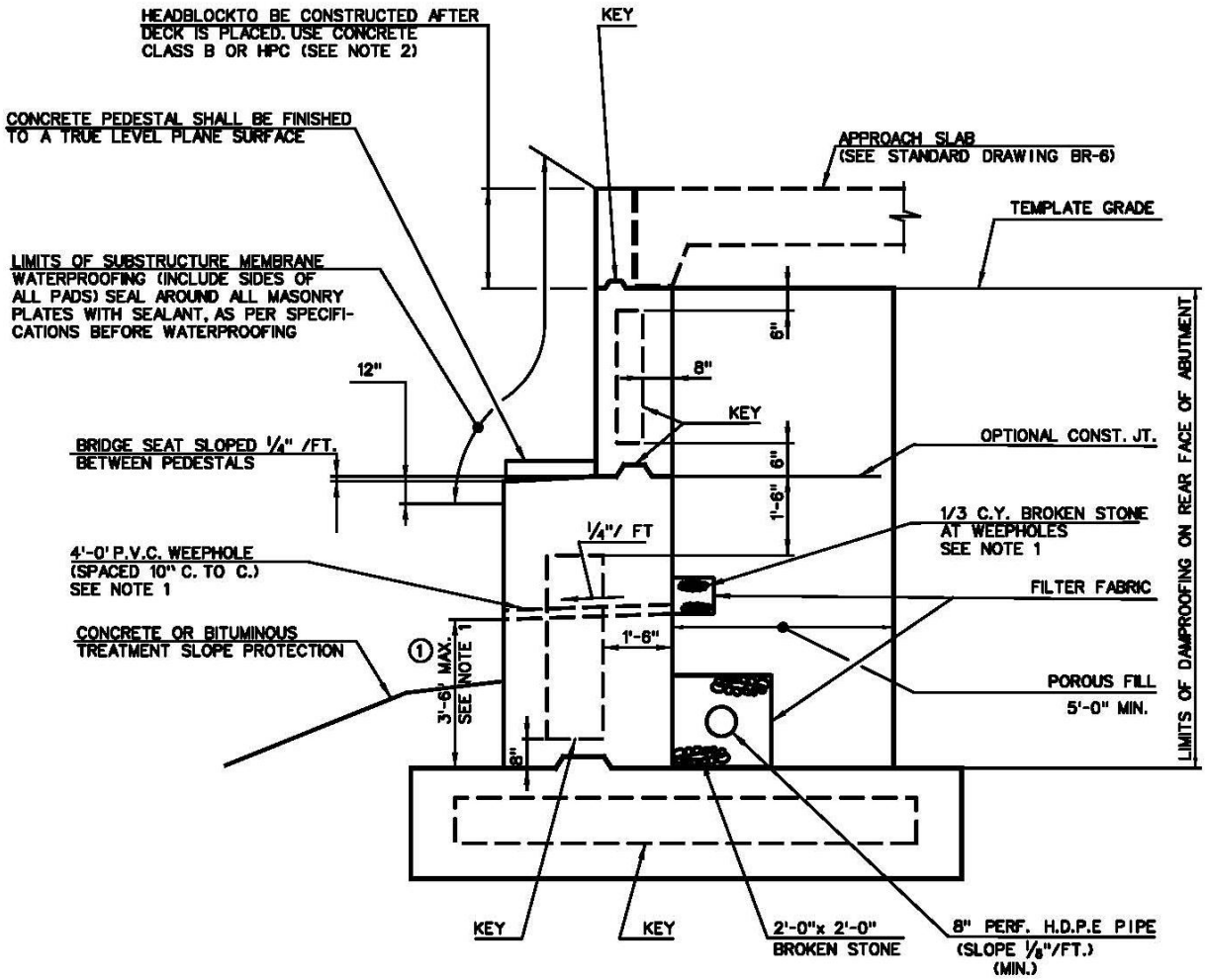

TYPICAL ABUTMENT SECTION
NTS

NOTES:

1. Abutments and Walls will normally be drained by weepholes and 8" HDPE pipe, as shown. The weepholes should not be used where they drain onto a sidewalk or roadway, or where they must be placed more than 3'-6" above the top of footing.

2. Headblock shall be HPC when deck is constructed of HPC.

EXHIBIT 2 - 202
SUBSTRUCTURE DETAILS – 3

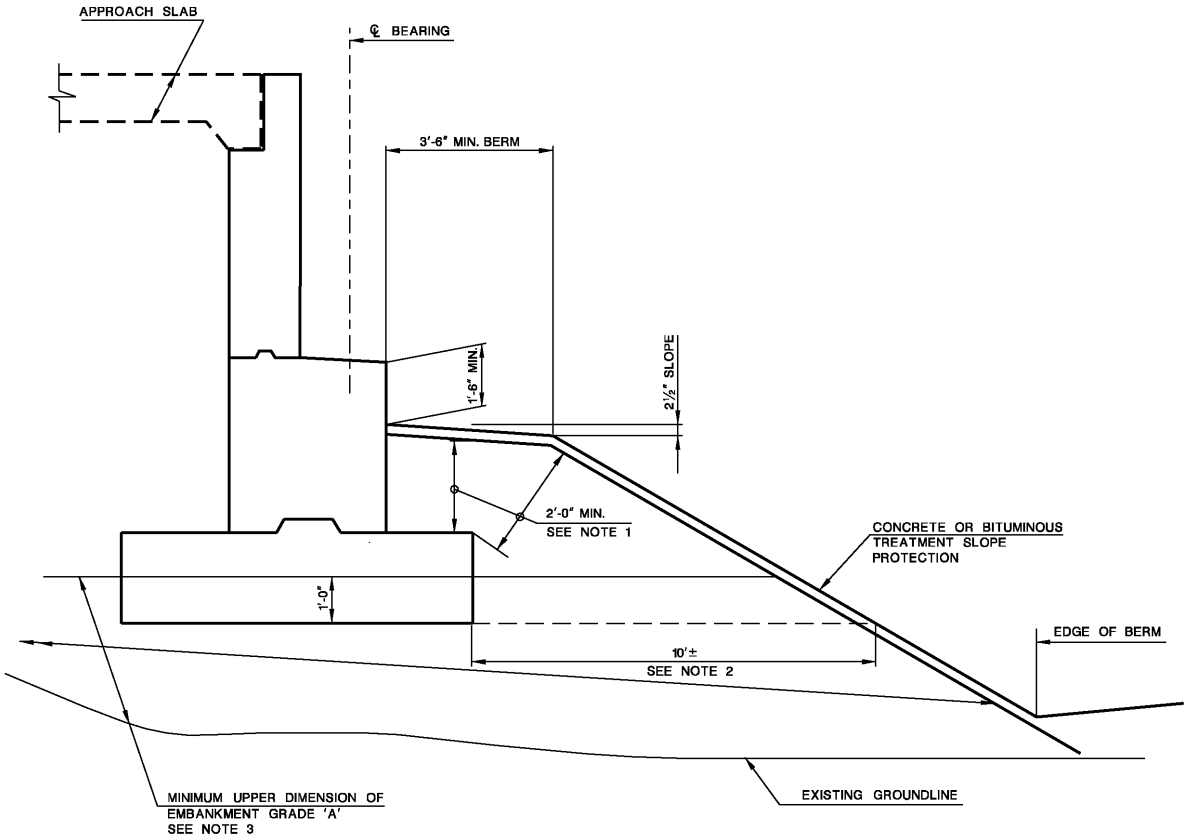

ABUTMENT IN FILL ON SPECIAL SUBGRADE MATERIAL

ABUTMENT DETAILS
NTS

NOTES:

1. Maintain 2'-0" minimum cover to all footings. Increase berm width, or lower footing if necessary.
2. For soil bearing abutments maintain 10ft. ±. Increase berm width, or lower footing if necessary.
3. Place common embankment in fill areas under pile supported abutments.

EXHIBIT 2 - 203
SUBSTRUCTURE DETAILS – 4

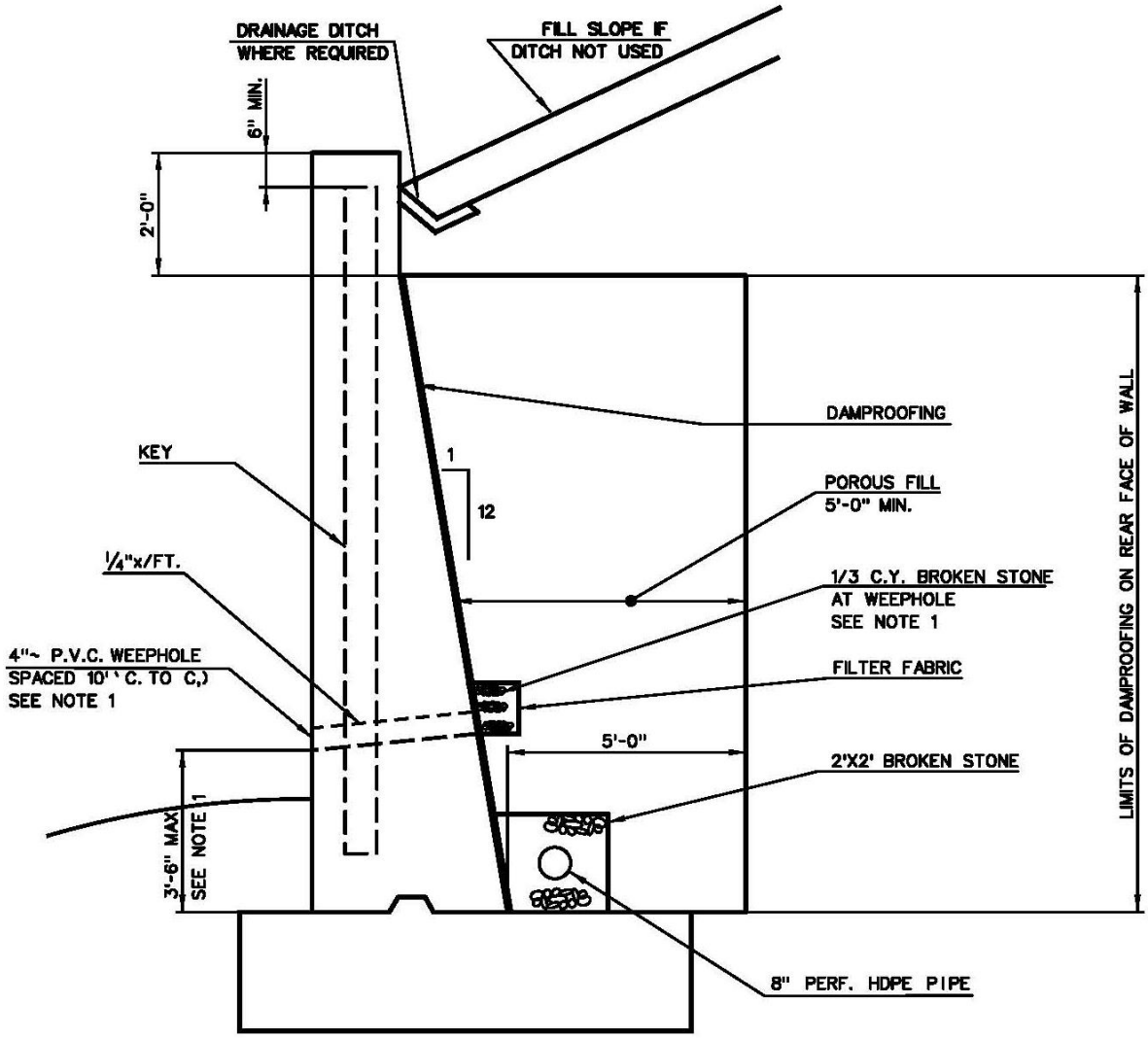

TOE OF SLOPE WALL SECTION

WALL DETAILS

NTS

NOTES:

1. Abutments and Walls will normally be drained by weepholes and 8" HDPE pipe, as shown. The weepholes should not be used where they drain onto a sidewalk or roadway, or where they must be placed more than 3'-6" above thr top of footing.

2. See Plate Exhibit 2-202 for additional details..

EXHIBIT 2 - 204
SUBSTRUCTURE DETAILS – 5

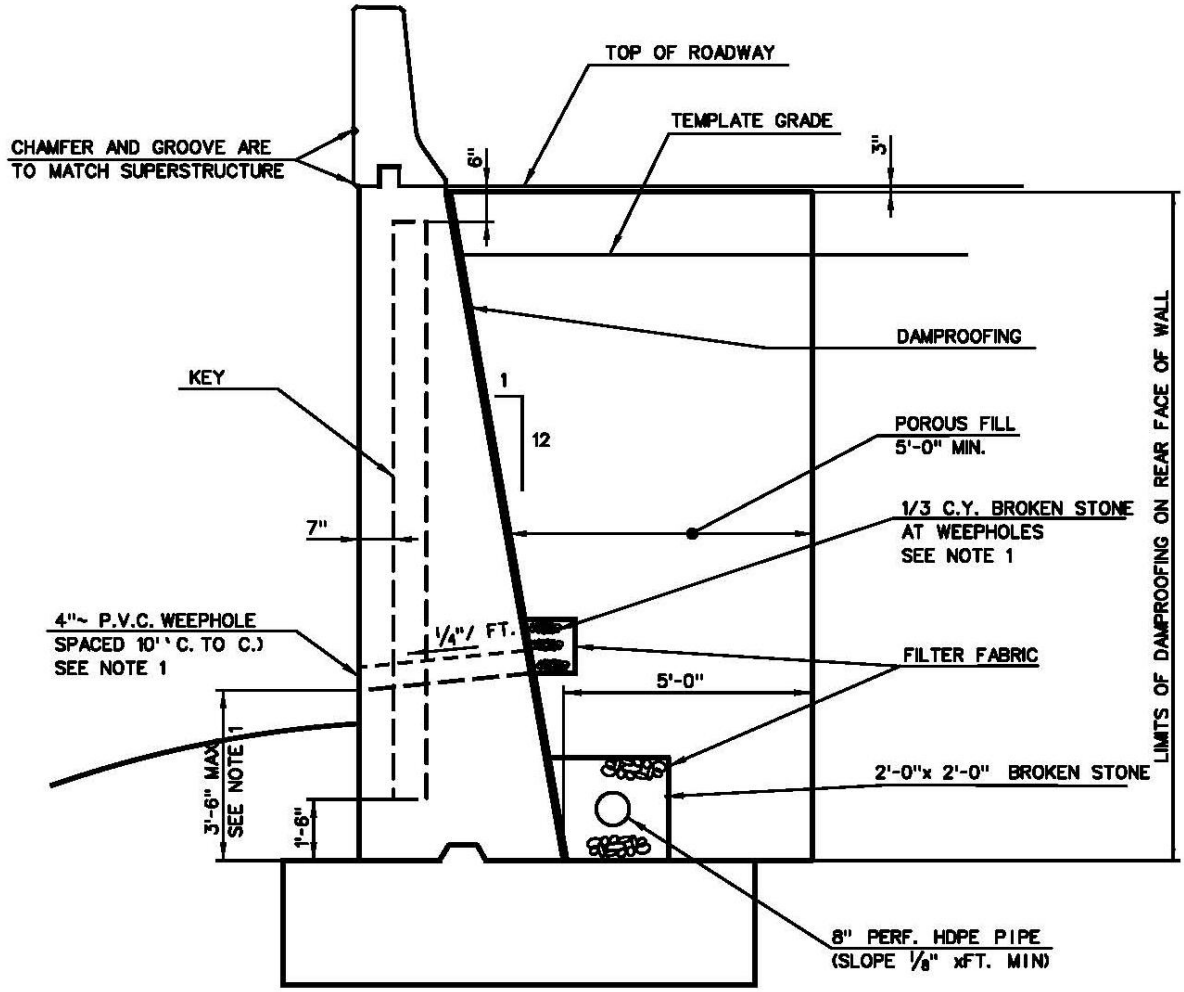

WINGWALL OR RETAINING WALL
SECTION WITH A PARAPET

WALL DETAILS

NOTES:

1. Abutments and Walls will normally be drained by weepholes and 8" HDPE pipe, as shown. The weepholes should not be used where they drain onto a sidewalk or roadway, or where they must be placed more than 3'-6" above the top of footing.

2. See Plate Exhibit 2-202 for additional details.

EXHIBIT 2 - 205
SUBSTRUCTURE DETAILS – 6

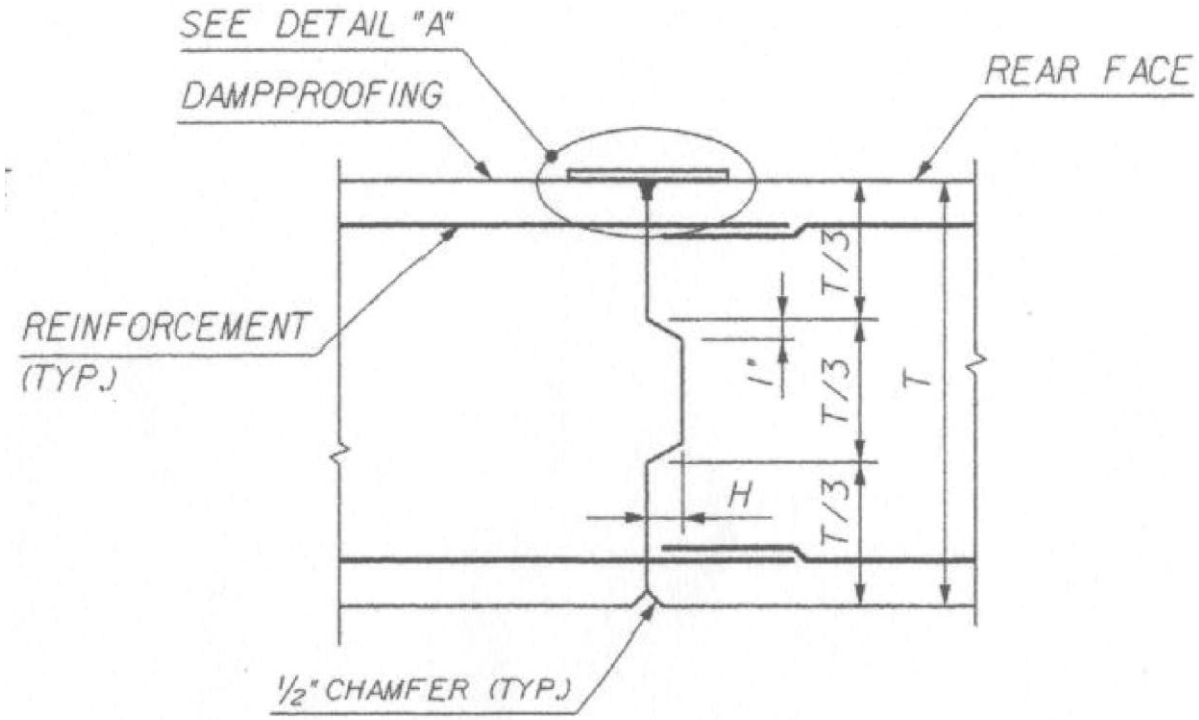

CONSTRUCTION JOINT

JOINT AND KEY DETAILS

NOTES:

1. H=2" for Joints below headblock and 3" for all other joints.
2. For Detail A, see Exhibit 2-209.

EXHIBIT 2 - 206
SUBSTRUCTURE DETAILS – 7

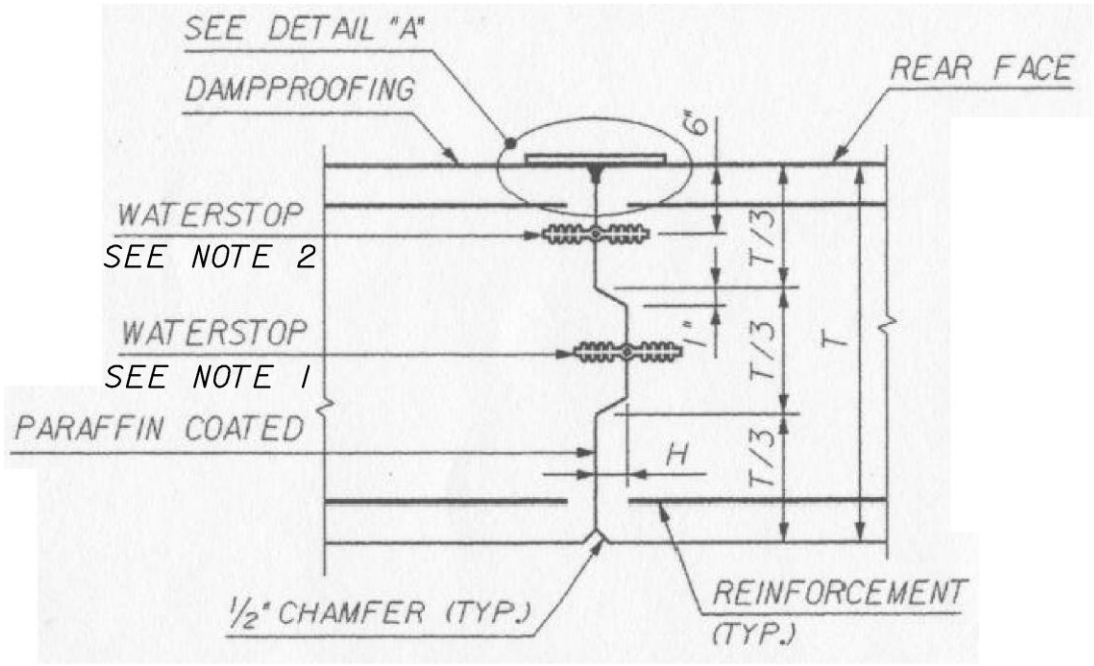

CONTRACTION JOINT

JOINT AND KEY DETAILS

NOTES:

1. Placement of waterstop in box culverts, toll plaza tunnels and wall less than 2'-0" wide.
2. Placement of waterstop in abutments and battered retaining walls.
3. Reinforcement is discontinuous at contraction and expansion joints.
4. Contraction joints shall be tight and shall be paraffin coated.
5. H=2" for joints below headblock and 3" for all other joints.
6. For Detail A, see Exhibit 2-209.

EXHIBIT 2 - 207
SUBSTRUCTURE DETAILS – 8

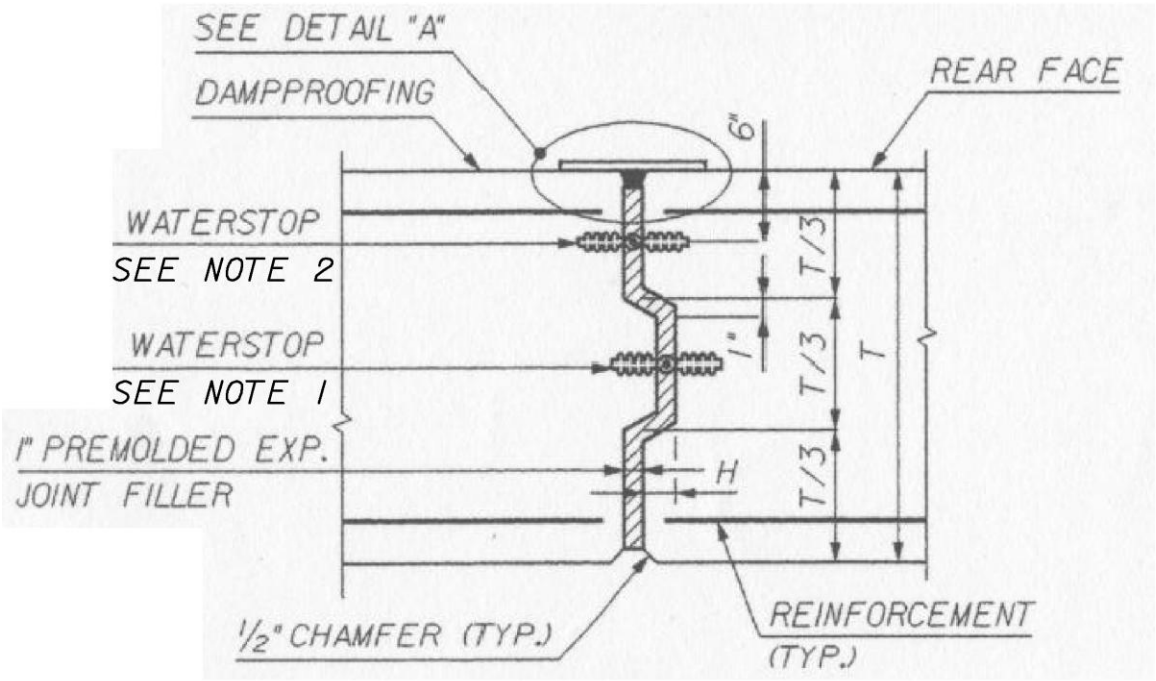

EXPANSION JOINT

JOINT AND KEY DETAILS

NOTES:

1. Placement of waterstop in box culverts, toll plaza tunnels and wall less than 2'-0" wide.
2. Placement of waterstop in abutments and battered retaining walls.
3. Reinforcement is discontinuous at contraction and expansion joints.
4. H=2" for joints below headblock and 3" for all other joints.
5. For Detail A, see Exhibit 2-209.

EXHIBIT 2 - 208
SUBSTRUCTURE DETAILS – 9

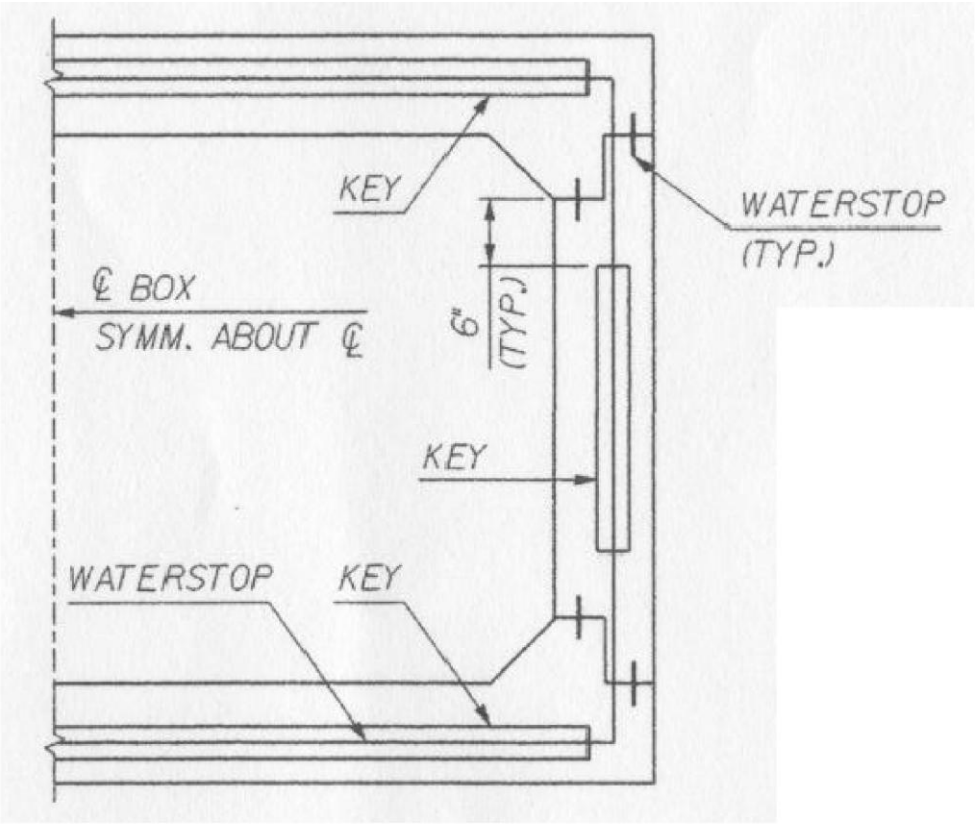

BOX CULVERT OR TUNNEL

JOINT AND KEY DETAILS

NOTES:

1. Waterstops shall be Continuous Plastic Waterstops, without splices, along the bottom half of Culverts or Tunnels.

EXHIBIT 2 - 209
SUBSTRUCTURE DETAILS – 10

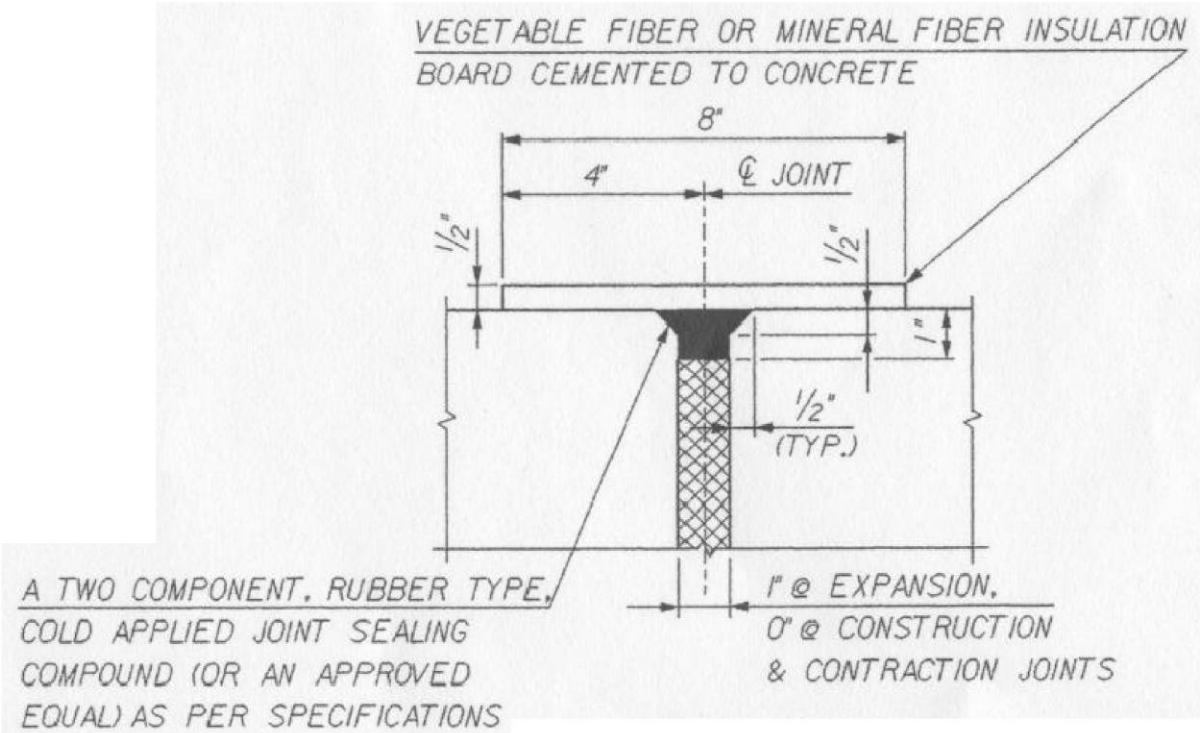

DETAIL A

JOINT AND KEY DETAILS

NOTES:

1. For Location of Detail A, see Exhibits 2-205, 2-206 and 2-207.

EXHIBIT 2 - 210
SUBSTRUCTURE DETAILS – 11

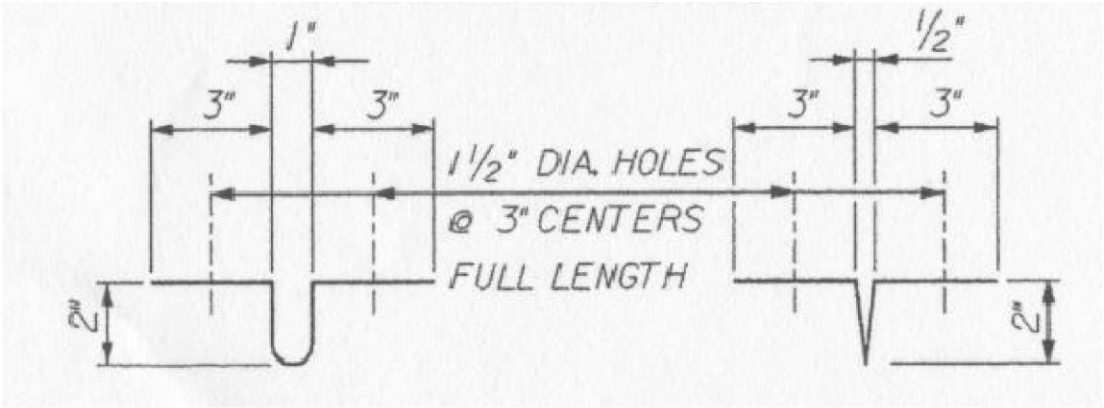

EXPANSION CONTRACTION

16 OZ. COPPER WATERSTOP - 10" WIDE

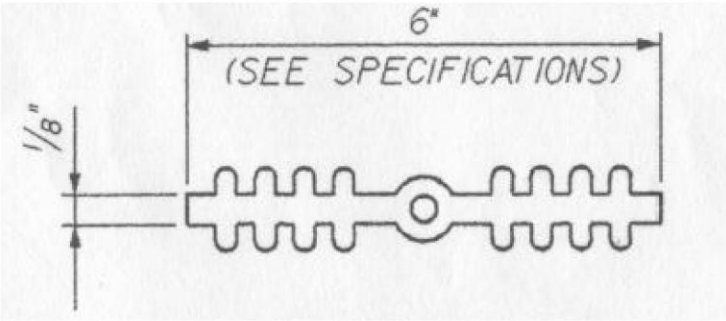

JOINT AND KEY DETAILS

NOTES:

1. Waterstop shall be either 6" plastic, or 16 oz. copper (10" long), as directed by the Engineer.

2. Wherever practicable, waterstop shall be one continuous length.

EXHIBIT 2 - 211
SUBSTRUCTURE DETAILS – 12

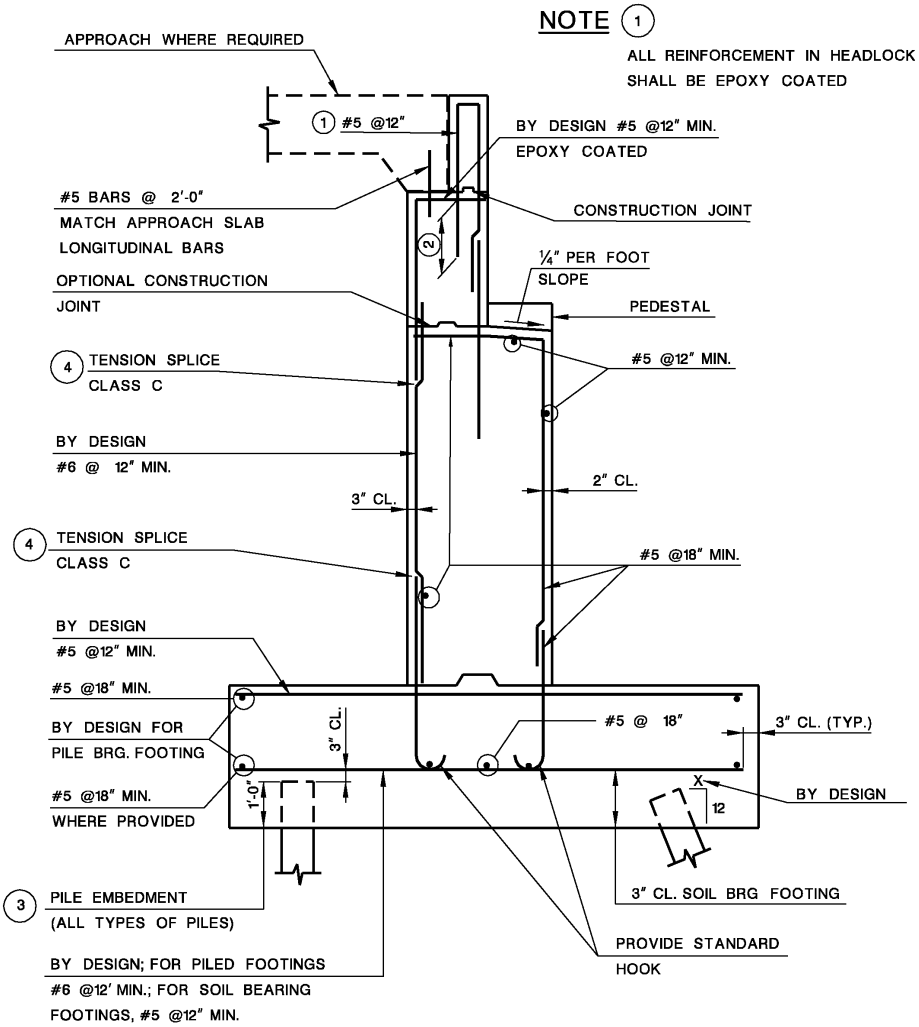

NOTES:

3 When required by design the piles shall be designed and detailed to resist uplift.

4 For splice criteria refer to current AASHTO requirements.

ABUTMENT REINFORCEMENT DETAIL
(WALL REINFORCEMENT SIMILAR)
NTS

EXHIBIT 2 - 212
SUBSTRUCTURE DETAILS – 13

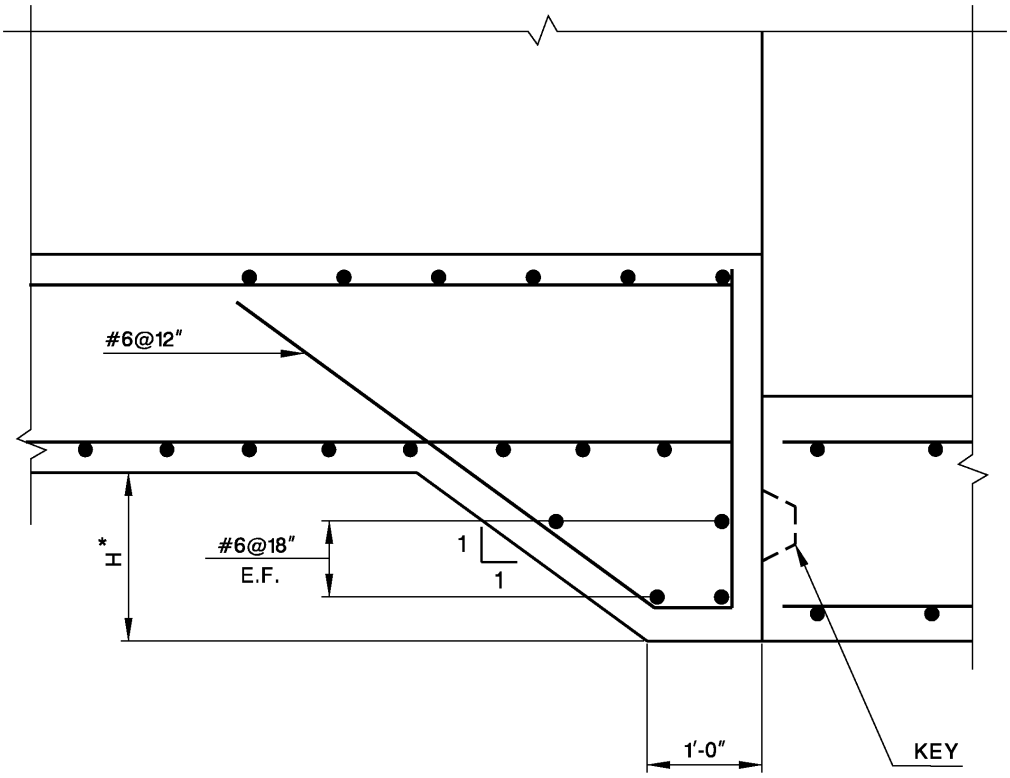

* Reinforcement to be provided when H≥2'.
H shall not be grater than depth of the footing; except that when the footing is on piles, H may be twice the depth of the footing

FOOTING HAUNCH DETAIL

NTS

EXHIBIT 2 - 213
SUBSTRUCTURE DETAILS – 14

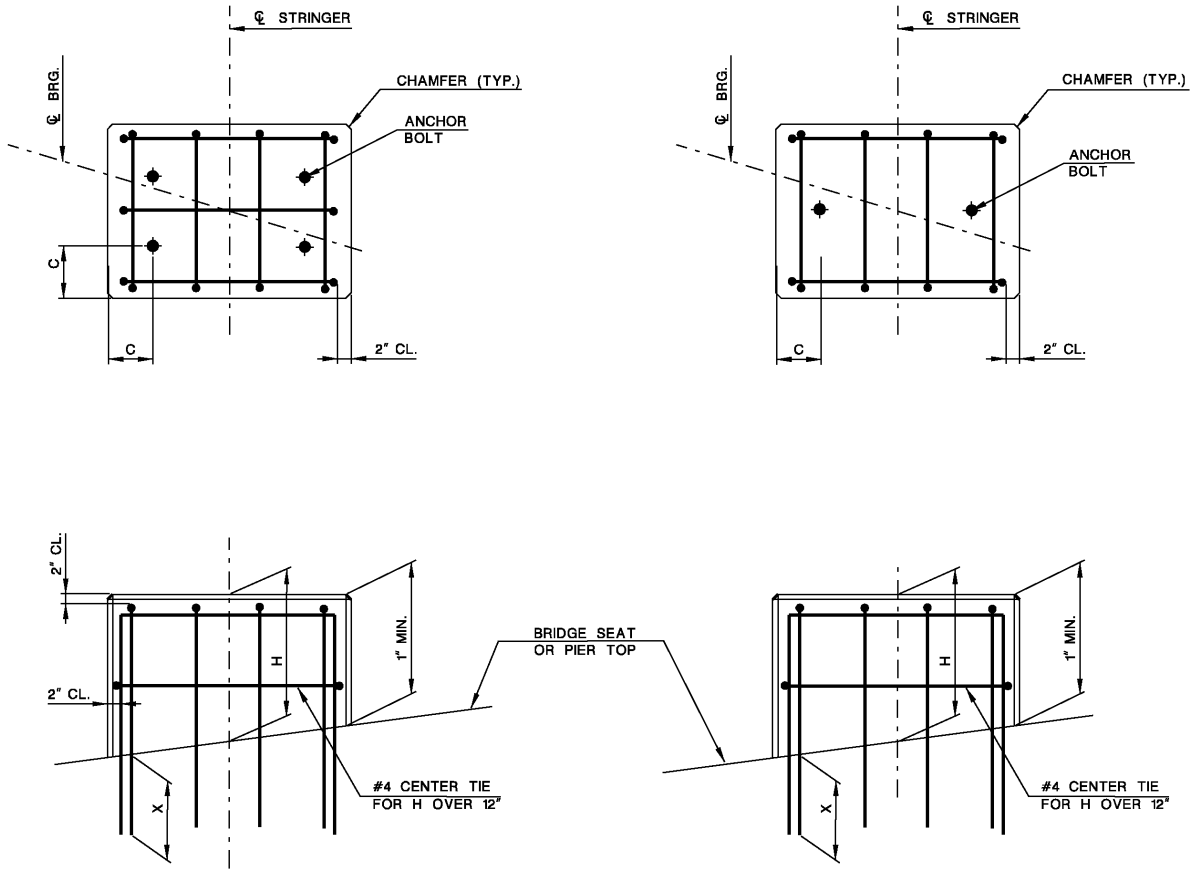

FOUR ANCHOR BOLTS

TWO ANCHOR BOLTS

For H up to 4", reinforcement is not required.
For H greater than 16", special investigation shall be made.

H	C	Bar Size	X
to 8"	5"	#4	12"
to 12"	5"	#5	15"
to 16"	6"	#5	15"

PEDESTAL REINFORCEMENT DETAILS
PIERS AND ABUTMENTS
NTS

EXHIBIT 2 - 214
SUBSTRUCTURE DETAILS – 15

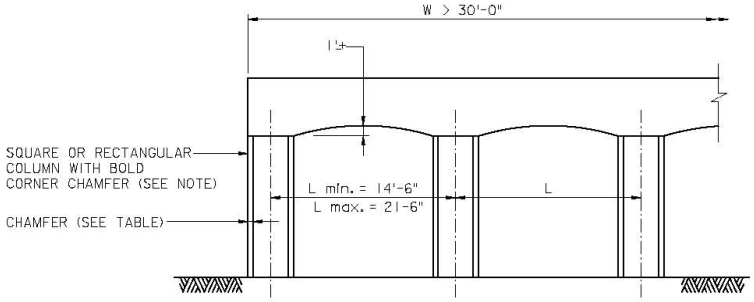

WITHOUT CANTILEVERS

NOTE:
APPLICABLE TO SINGLE COLUMN PIERS AND SINGLE COLUMNS USED TO SUPPORT BOX GIRDERS.

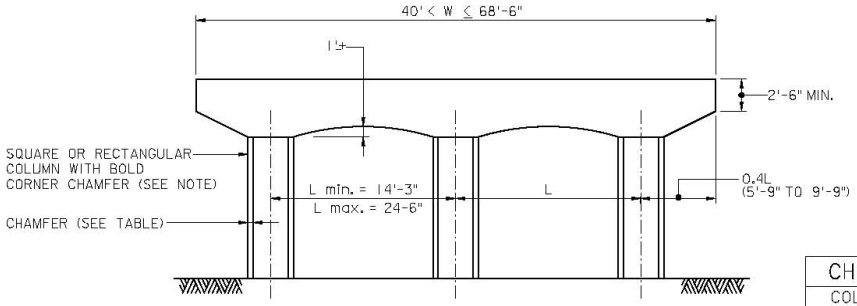

CHAMFER TABLE	
COLUMN DIMENSION	CHAMFER SIZE
3'-0"	6"
3'-6"	7"
4'-0"	8"

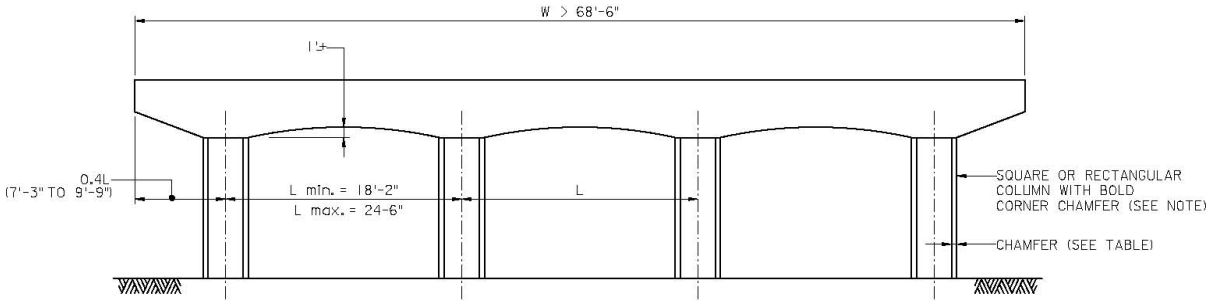

WITH CANTILEVERS

TURNPIKE PIER DETAIL GUIDELINES
NTS

SERIES 300 – SUPERSTRUCTURE DETAILS

EXHIBIT 2 - 300
SUPERSTRUCTURE DETAILS – 1

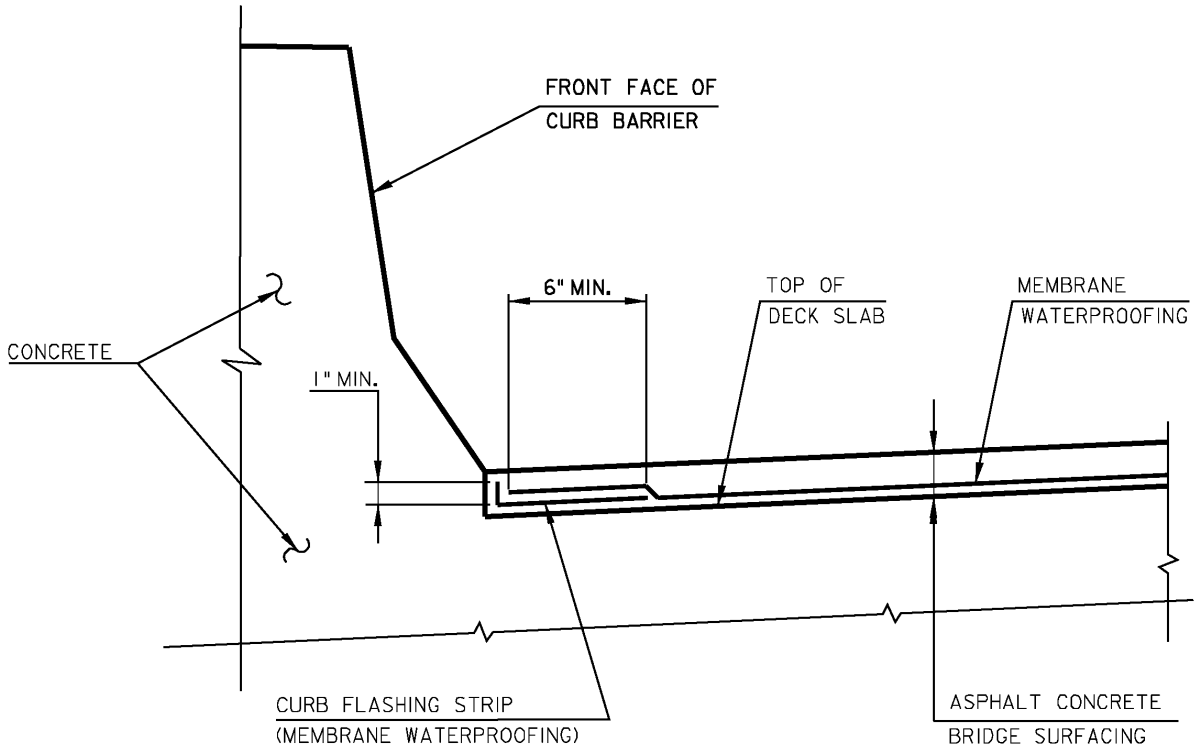

MEMBRANE WATERPROOFING DETAIL AT CURB

NTS

EXHIBIT 2 - 301
SUPERSTRUCTURE DETAILS – 2

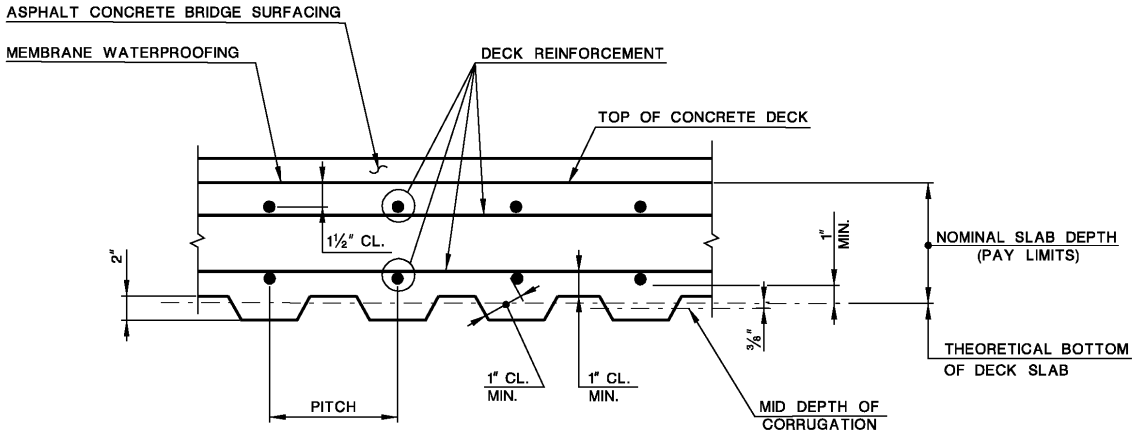

LONGITUDINAL SECTION
(ASPHALT SURFACED DECKS)

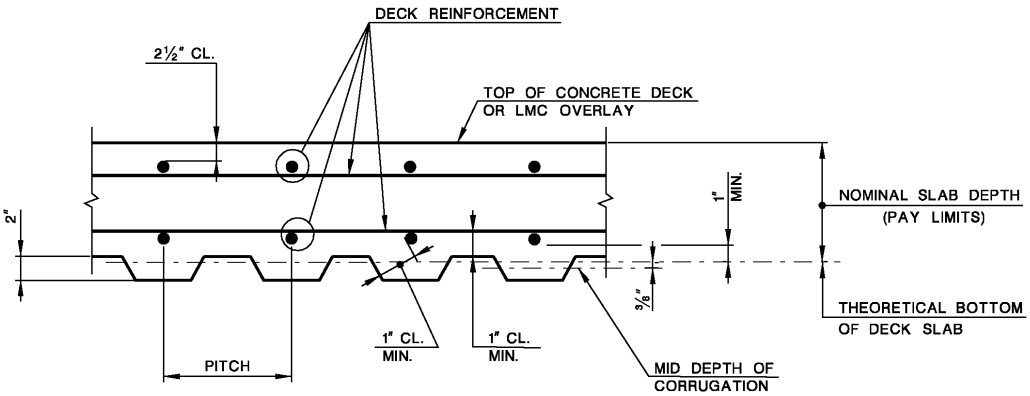

LONGITUDINAL SECTION
(BARE DECKS AND LMC OVERLAYED DECKS)

FORM AND REINFORCEMENT DETAILS
NTS

EXHIBIT 2 - 302
SUPERSTRUCTURE DETAILS – 3

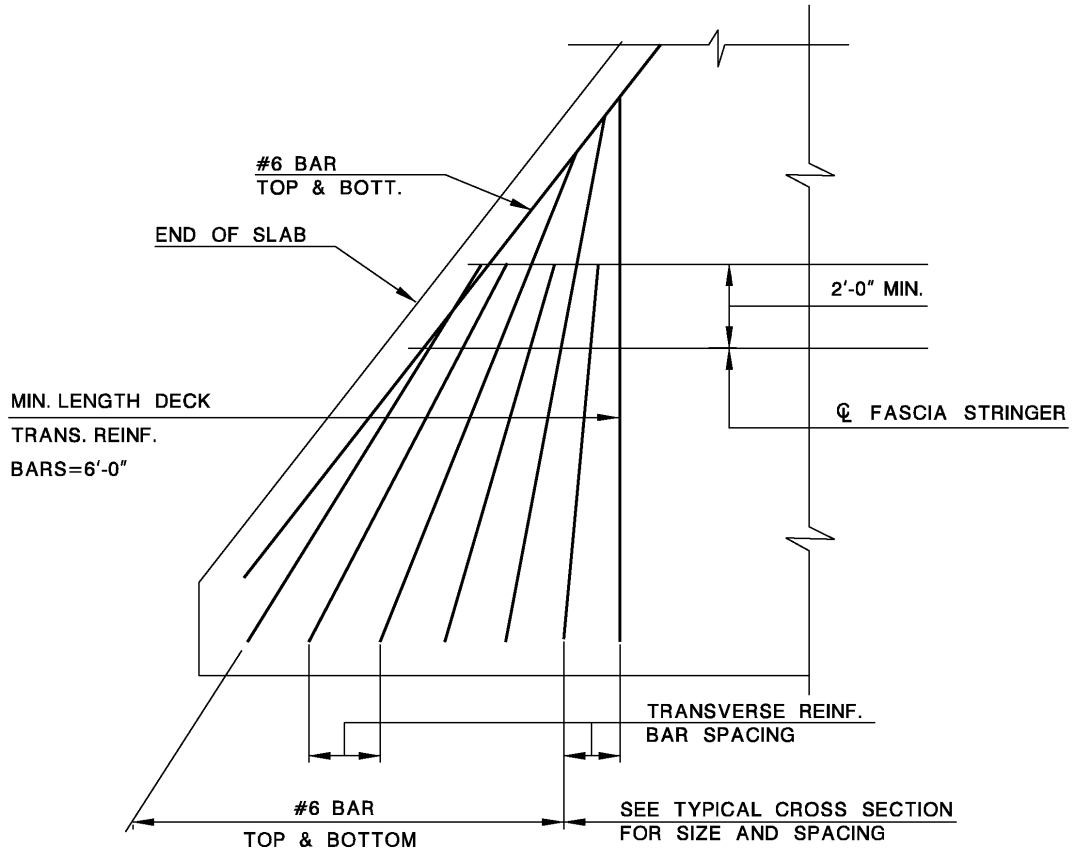

REINFORCEMENT IN CORNERS OF SKEWED SLABS

FORM AND REINFORCEMENT DETAILS
NTS

EXHIBIT 2 - 303
SUPERSTRUCTURE DETAILS – 4

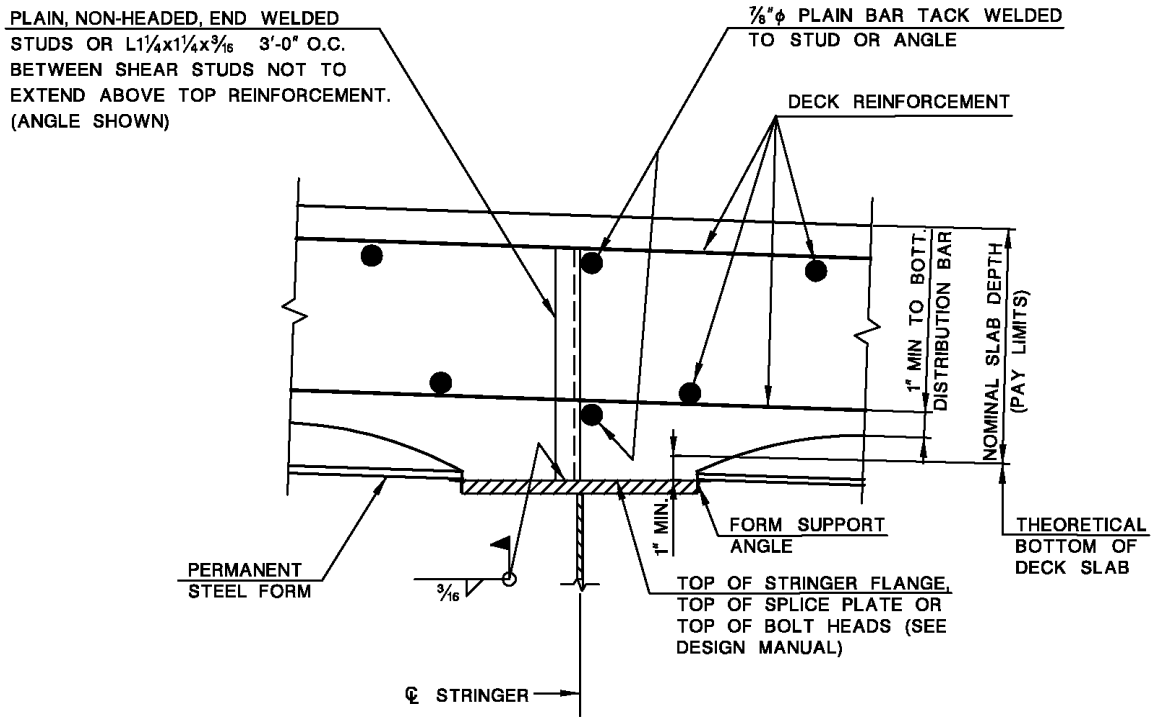

TRANSVERSE SECTION
(COMPRESSION FLANGES ONLY)

FORM AND REINFORCEMENT DETAILS
NTS

NOTES:

1. For beams with Tension in the Top Flange, Reinforcement Support shall not be welded directly to the Top Flange. Contract Plans shall include Non Welded Connection Details.

SERIES 400 – SIGN STRUCTURES

EXHIBIT 2 - 400
PARKWAY GROUND MOUNTED SIGNS – 1

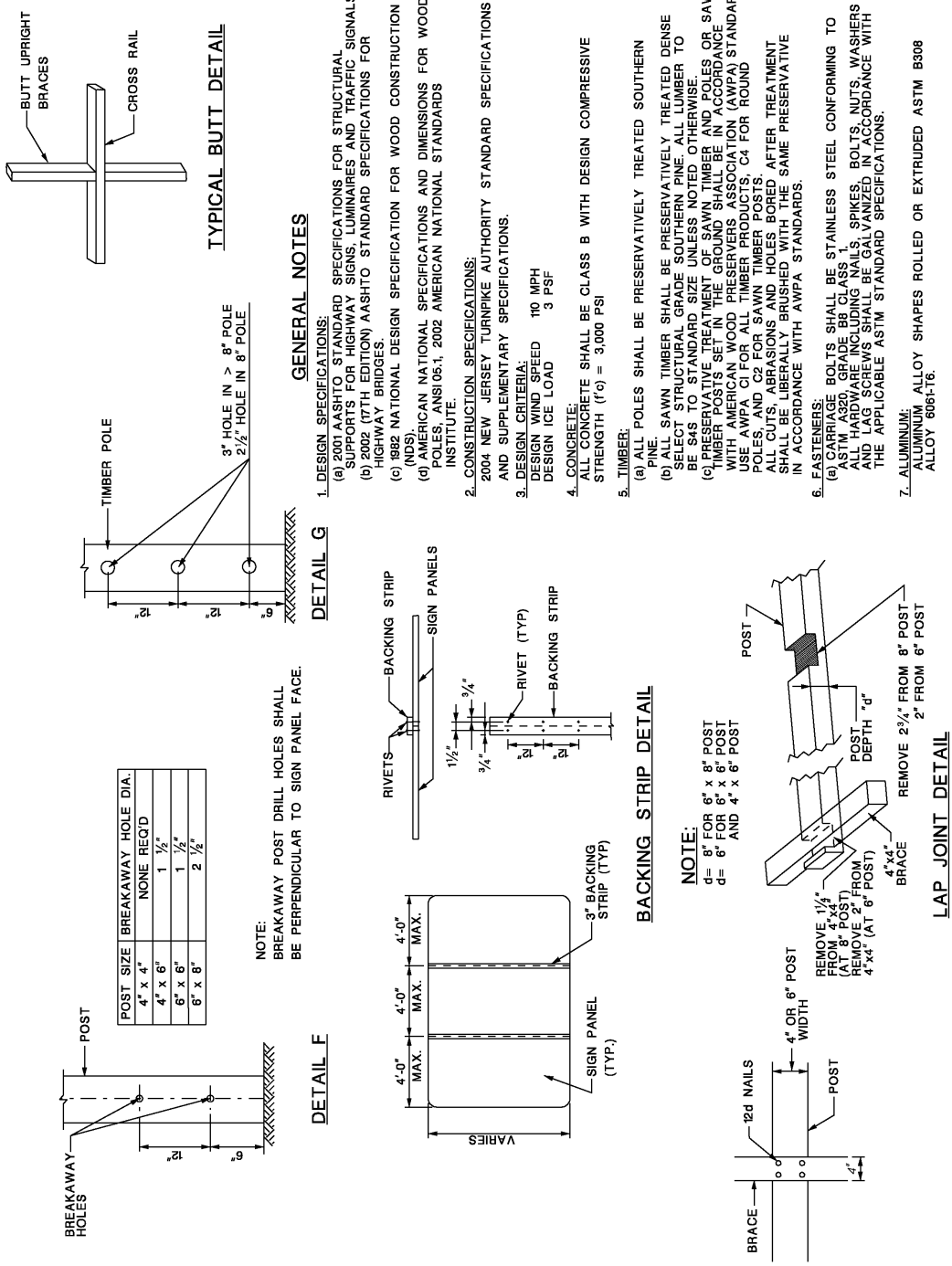

POST SIZE	BREAKAWAY HOLE DIA.
4" x 4"	NONE REQ'D
4" x 6"	1 ½"
6" x 6"	1 ½"
6" x 8"	2 ½"

GENERAL NOTES

1. DESIGN SPECIFICATIONS:
   (a) 2001 AASHTO STANDARD SPECIFICATIONS FOR STRUCTURAL SUPPORTS FOR HIGHWAY SIGNS, LUMINAIRES AND TRAFFIC SIGNALS.
   (b) 2002 (17TH EDITION) AASHTO STANDARD SPECIFICATIONS FOR HIGHWAY BRIDGES.
   (c) 1982 NATIONAL DESIGN SPECIFICATION FOR WOOD CONSTRUCTION (NDS).
   (d) AMERICAN NATIONAL SPECIFICATIONS AND DIMENSIONS FOR WOOD POLES, ANSI 05.1, 2002 AMERICAN NATIONAL STANDARDS INSTITUTE.
2. CONSTRUCTION SPECIFICATIONS:
   2004 NEW JERSEY TURNPIKE AUTHORITY STANDARD SPECIFICATIONS AND SUPPLEMENTARY SPECIFICATIONS.
3. DESIGN CRITERIA:
   DESIGN WIND SPEED 110 MPH
   DESIGN ICE LOAD 3 PSF
4. CONCRETE:
   ALL CONCRETE SHALL BE CLASS B WITH DESIGN COMPRESSIVE STRENGTH (f'c) = 3,000 PSI
5. TIMBER:
   (a) ALL POLES SHALL BE PRESERVATIVELY TREATED SOUTHERN PINE.
   (b) ALL SAWN TIMBER SHALL BE PRESERVATIVELY TREATED DENSE SELECT STRUCTURAL GRADE SOUTHERN PINE. ALL LUMBER TO BE S4S TO STANDARD SIZE UNLESS NOTED OTHERWISE.
   (c) PRESERVATIVE TREATMENT OF SAWN TIMBER AND POLES OR SAWN TIMBER POSTS SET IN THE GROUND SHALL BE IN ACCORDANCE WITH AMERICAN WOOD PRESERVERS ASSOCIATION (AWPA) STANDARDS. USE AWPA C1 FOR ALL TIMBER PRODUCTS, C4 FOR ROUND POLES AND C2 FOR SAWN TIMBER POSTS.
   ALL CUTS, ABRASIONS AND HOLES BORED AFTER TREATMENT SHALL BE LIBERALLY BRUSHED WITH THE SAME PRESERVATIVE IN ACCORDANCE WITH AWPA STANDARDS.
6. FASTENERS:
   (a) CARRIAGE BOLTS SHALL BE STAINLESS STEEL CONFORMING TO ASTM A320, GRADE B8 CLASS 1.
   ALL HARDWARE INCLUDING NAILS, SPIKES, BOLTS, NUTS, WASHERS AND LAG SCREWS SHALL BE GALVANIZED IN ACCORDANCE WITH THE APPLICABLE ASTM STANDARD SPECIFICATIONS.
7. ALUMINUM:
   ALUMINUM ALLOY SHAPES ROLLED OR EXTRUDED ASTM B308 ALLOY 6061-T6.

EXHIBIT 2 - 401
PARKWAY GROUND MOUNTED SIGNS – 2

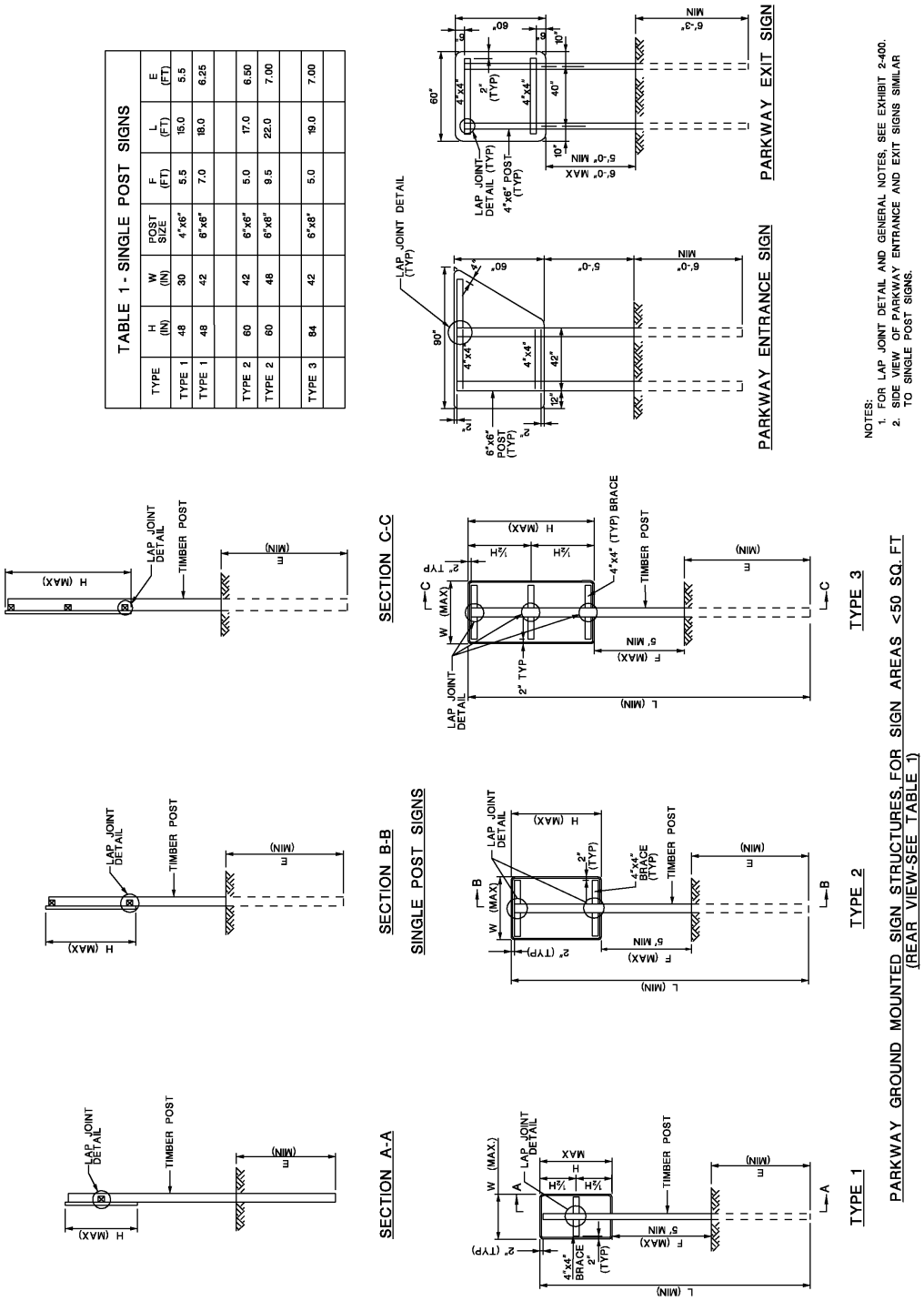

TABLE 1 - SINGLE POST SIGNS

TYPE	H (IN)	W (IN)	POST SIZE	F (FT)	L (FT)	E (FT)
TYPE 1	48	30	4"x6"	5.5	15.0	5.5
TYPE 1	48	42	6"x6"	7.0	18.0	6.25
TYPE 2	60	42	6"x6"	5.0	17.0	6.50
TYPE 2	60	48	6"x8"	9.5	22.0	7.00
TYPE 3	84	42	6"x8"	5.0	19.0	7.00

PARKWAY GROUND MOUNTED SIGN STRUCTURES FOR SIGN AREAS <50 SQ. FT
(REAR VIEW-SEE TABLE 1)

EXHIBIT 2 - 402
PARKWAY GROUND MOUNTED SIGNS – 3

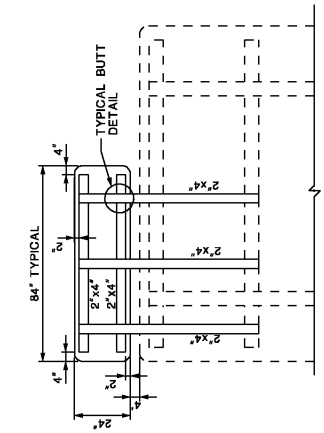

EXIT OVERPANEL SIGN

NOTE:
EXIT PANEL LOCATED ON SAME SIDE AS EXIT RAMP

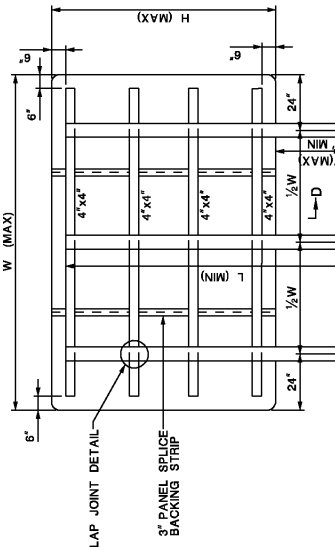

TRIPLE POST SIGNS

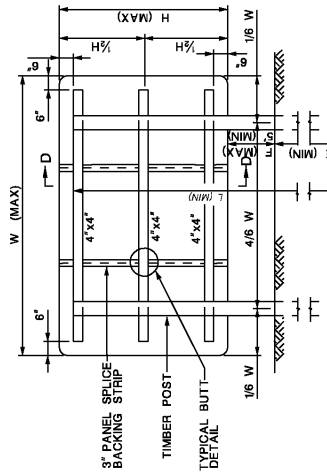

DOUBLE POST SIGNS

GROUND MOUNTED SIGN STRUCTURES FOR SIGN AREAS > 50 SQ. FT. AND < 100 SQ. FT.
(REAR VIEW - SEE TABLES 2 & 3)

NOTES:
FOR LAP JOINTS, BUTT DETAILS, BACKING STRIP DETAILS AND GENERAL NOTES, SEE EXHIBIT 2-400.

TABLE 2 - DOUBLE POST SIGNS

H (FT)	W (FT)	POST SIZE (IN)	F (FT)	L (FT)	E (FT)	H (FT)	W (FT)	POST SIZE (IN)	F (FT)	L (FT)	E (FT)
4	5	4 x 6	5 TO 9	15 TO 19	6.0	5	12	6 x 8	5 TO 8	18 TO 21	8.0
4	5	6 x 6	9 TO 12	19 TO 22	6.0	5	12	6 x 8	8 TO 12	22 TO 26	9.0
4	6	4 x 6	5 TO 6	15 TO 16	6.0	6	6	6 x 6	5 TO 9	18 TO 22	7.0
4	6	6 x 6	6 TO 12	17 TO 23	7.0	6	6	6 x 6	9 TO 12	22.5 TO 25.5	7.5
4	8	6 x 6	5 TO 10	16 TO 21	7.0	6	8	6 x 8	5 TO 8	18.5 TO 21.5	7.5
4	8	6 x 8	10 TO 12	21 TO 23	7.0	6	8	6 x 8	8 TO 12	22.5 TO 26.5	8.5
4	10	6 x 6	5 TO 10	16 TO 18	7.0	6	10	6 x 8	5 TO 10	19 TO 24	8.0
4	10	6 x 8	10 TO 12	18.5 TO 23.5	7.5	6	10	6 x 8	10 TO 12	25 TO 27	9.0
5	5	6 x 6	5 TO 8	16 TO 19	6.0	7	7	6 x 6	5 TO 9	19.5 TO 23.5	7.5
5	5	6 x 8	8 TO 12	19.5 TO 23.5	6.5	7	7	6 x 8	9 TO 12	24.5 TO 27.5	8.5
5	6	6 x 8	5 TO 8	16 TO 19	6.0	7	8	6 x 8	5 TO 7	19.5 TO 21.5	7.5
5	6	6 x 8	8 TO 12	19.5 TO 23.5	6.5	7	8	6 x 8	7 TO 12	22.5 TO 27.5	8.5
5	8	6 x 6	5 TO 7	17 TO 19	7.0	7	10	6 x 8	5 TO 8	20.5 TO 23.5	8.5
5	8	6 x 8	7 TO 10	19 TO 22	7.0	7	10	6 x 8	8 TO 12	24.5 TO 28.5	9.5
5	8	6 x 8	10 TO 12	22.5 TO 24.5	7.5	8	6	6 x 8	5 TO 9	20.5 TO 24.5	7.5
5	10	6 x 8	5 TO 9	17.5 TO 21.5	7.5	8	6	6 x 8	9 TO 12	25 TO 28	8.0
5	10	6 x 8	9 TO 12	22.5 TO 25.5	8.5						

TABLE 3 - TRIPLE POST SIGNS

H (FT)	W (FT)	POST SIZE (IN)	F (FT)	L (FT)	E (FT)
6	12	6 x 8	5 TO 8	18.5 TO 21.5	7.5
6	12	6 x 8	8 TO 12	22 TO 26	8.0
7	12	6 x 8	5 TO 8	20 TO 23	8.0
7	12	6 x 8	8 TO 12	23.5 TO 27.5	8.5
8	10	6 x 8	5 TO 10	21 TO 26	8.0
8	10	6 x 8	10 TO 12	26.5 TO 28.5	8.5
8	12	6 x 8	5 TO 8	21.5 TO 24.5	8.5
8	12	6 x 8	8 TO 12	25.5 TO 29.5	9.5
9	8	6 x 8	5 TO 8	21.5 TO 24.5	7.5
9	8	6 x 8	8 TO 12	25 TO 29	8.0
9	10	6 x 8	5 TO 7	22 TO 24	8.0
9	10	6 x 8	7 TO 12	25 TO 30	9.0

EXHIBIT 2 - 403
PARKWAY GROUND MOUNTED SIGNS – 4

TABLE 4 - DOUBLE & TRIPLE POLE SIGNS

H (FT)	W (FT)	A (FT)	CLASS POLE*	L (FT)	D (FT)	E (FT)	NO. POLES
10	10	6 TO 8	1	25	2.0	5.5	2
10	10	8 TO 14	1	30	2.0	6.5	2
10	12	6 TO 10	1	35	2.5	6.5	2
10	12	10 TO 14	H2	35	2.5	6.5	2
10	14	6 TO 8	1	35	2.5	6.5	2
10	14	8 TO 10	H1	40	2.5	6.5	2
10	16	6 TO 10	1	30	2.5	6.0	3
10	16	10 TO 14	1	35	2.5	6.5	3
10	18	6 TO 8	1	30	2.0	6.0	3
10	18	8 TO 15	H1	35	2.5	6.5	3
10	20	6 TO 8	1	35	2.5	6.0	3
10	20	8 TO 12	H1	35	2.5	6.5	3
10	20	12 TO 15.5	H2	35	2.5	7.0	3
11	11	6 TO 10	1	35	2.5	6.5	2
11	11	10 TO 14	H1	35	2.5	6.5	2
11	12	6 TO 10	1	35	2.5	6.5	2
11	12	10 TO 14	H1	40	2.5	6.5	2
11	14	6 TO 10	1	35	2.5	6.5	2
11	14	10 TO 14	H2	40	2.5	6.5	2
11	16	6 TO 13	1	35	2.5	6.5	3
11	16	13 TO 14	H1	40	2.5	6.5	3
11	18	6 TO 10	1	35	2.5	6.5	3
11	18	10 TO 15	H2	35	2.5	6.5	3
11	20	6 TO 8	1	35	2.5	6.5	3
11	20	8 TO 12	H2	35	2.5	6.5	3
11	20	12 TO 15.5	H2	40	2.5	7.0	3
12	12	6 TO 8	1	35	2.5	6.5	2
12	12	8 TO 14	H2	40	2.5	6.5	2
12	14	6 TO 9	H2	35	2.5	6.5	2
12	14	8 TO 14	H2	40	2.5	6.5	2
12	16	6 TO 10	1	35	2.5	6.5	3
12	16	10 TO 14	H2	35	2.5	6.5	3
12	18	6 TO 10	H1	35	2.5	6.5	3
12	18	10 TO 12	H2	35	2.5	6.5	3
12	19	7 TO 15	H3	40	2.5	6.5	3
12	20	6 TO 8	H1	35	2.5	6.5	3
12	20	8 TO 14	H2	40	2.5	7.0	3
12	20	14 TO 15.5	H3	40	2.5	8.0	3
13	13	6 TO 8	H1	35	2.5	6.5	2
13	13	8 TO 14	H2	45	2.5	7.0	2
13	14	6 TO 10	H2	40	2.5	6.5	2
13	14	10 TO 14	H2	40	2.5	7.0	2
13	16	6 TO 8	H2	40	2.5	7.0	3
13	16	8 TO 14	H2	40	2.5	6.5	3
13	18	6 TO 9	H2	35	2.5	6.5	3
13	18	10 TO 15.5	H3	40	2.5	7.0	3
13	20	6 TO 8	H2	40	2.5	8.0	3
13	20	8 TO 12	H3	40	2.5	7.0	3
13	20	12 TO 15.5	H3	40	2.5	8.0	3
14	14	6 TO 12	H1	35	2.5	6.5	3
14	14	12 TO 14	H2	35	2.5	7.0	3
14	16	6 TO 10	H2	35	2.5	6.5	3
14	16	10 TO 14	H3	40	2.5	7.0	3
14	18	6 TO 10	H3	35	2.5	7.0	3
14	18	10 TO 15.5	H3	40	2.5	8.0	3
14	20	6 TO 8	H2	35	2.5	7.0	3
14	20	8 TO 14	H3	40	2.5	8.0	3
14	20	14 TO 15.5	H4	45	2.5	8.0	3
15	15	6 TO 10	H2	35	2.5	7.0	3
15	15	10 TO 14	H3	40	2.5	7.0	3
15	16	6 TO 8	H1	35	2.5	6.5	3
15	16	8 TO 14	H3	40	2.5	7.0	3
15	18	6 TO 8	H2	35	2.5	7.0	3
15	18	8 TO 12	H3	40	2.5	8.0	3
15	18	12 TO 15.5	H4	45	2.5	8.0	3
15	20	6 TO 8	H3	40	2.5	7.0	3
15	20	8 TO 15.5	H4	45	2.5	8.0	3

*ANSI STANDARD DESIGNATION

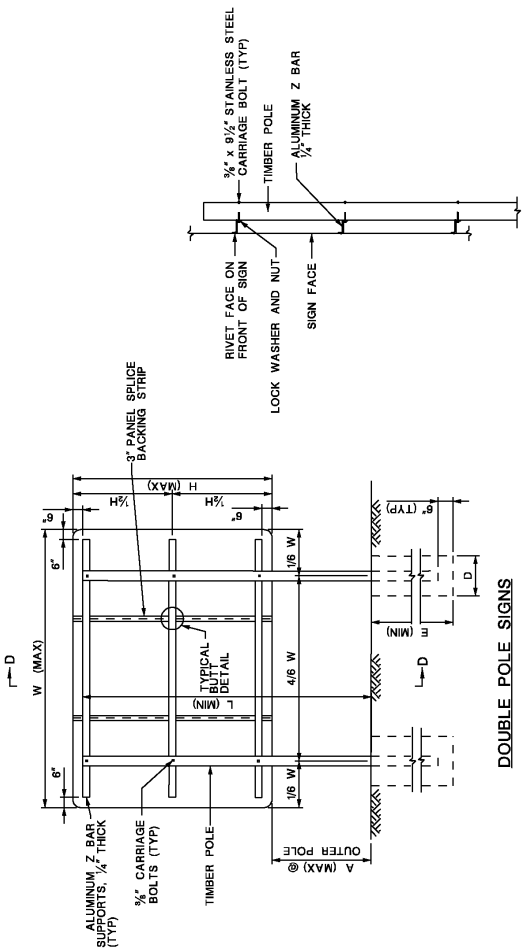

NOTES:
1. FOR BUTT DETAILS, BACKING STRIP DETAILS AND GENERAL NOTES, SEE EXHIBIT 2-400

PARKWAY GROUND MOUNTED SIGN STRUCTURES FOR SIGN AREAS > 100 SQ. FT.
(REAR VIEW - SEE TABLE 4)

EXHIBIT 2 - 404
OVERHEAD SIGN STRUCTURES NOTES

Overhead Sign Structure Notes

A. On span structures where “Lane Ends” sign is used, “Lane Ends” sign to be centered over the lane to be dropped; Exit Direction Sign to be centered over the decel lane or shifted right to obtain 6” min. between signs if necessary; the Thru Lane Designation Sign is to be centered over the remaining left lanes or shifted left to obtain the 6” min. between signs, if necessary.
B. On other span structures, Exit Direction Sign to be centered over right lane and decel lane; the Thru Lane Designation Sign is to be centered over the remaining left lanes or shifted left to obtain the 6” min. between signs, if necessary.
C. Sign Panels are to be positioned vertically to provide 17’-0” min. to 18’-0” max vertical clearance above high point of roadway, unless otherwise noted.
D. The end frame heights and diameters of the end posts shall be shown on the Sign Support Structure elevation views in the contract plans.
E. Elev. “A” is to be 4’-0” minimum above the high point of the Turnpike/Parkway Roadways, Elev. “AR” and “AL” are to be the same.
F. Sign elevations will always be taken in the direction of the driver. Right and left end frames will be referred to in this manner.
G. Normal dimensions from face of guide rail to back of post is 1’-5”.

EXHIBIT 2 - 405
TURNPIKE OVERHEAD SIGN STRUCTURES – 1

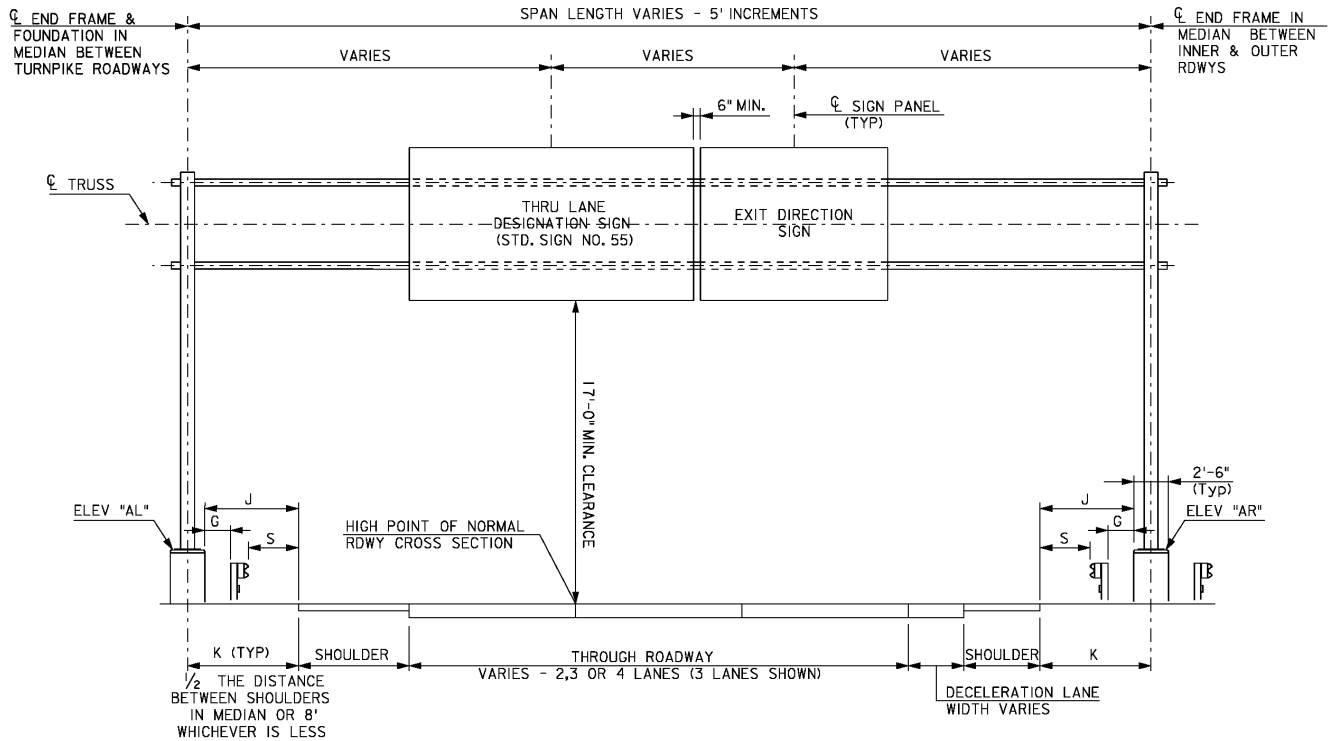

	WHEN K=4'-6"	WHEN K=8'-0"
G	1'-10"	3'-4"
S	0"	2'-0"
J	3'-3"	6'-9"

WHEN K IS GREATER THAN 8'-0", GUIDE RAIL CRITERIA TO GOVERN.
WHEN K IS LESS THAN 4'-6" CONCRETE BARRIER PROTECTION SHALL BE USED.

OVERHEAD SPAN STRUCTURE
NTS

NOTES:

1. SEE EXHIBIT 2-404 FOR OVERHEAD SIGN STRUCTURE NOTES.

EXHIBIT 2 - 406
TURNPIKE OVERHEAD SIGN STRUCTURES – 2

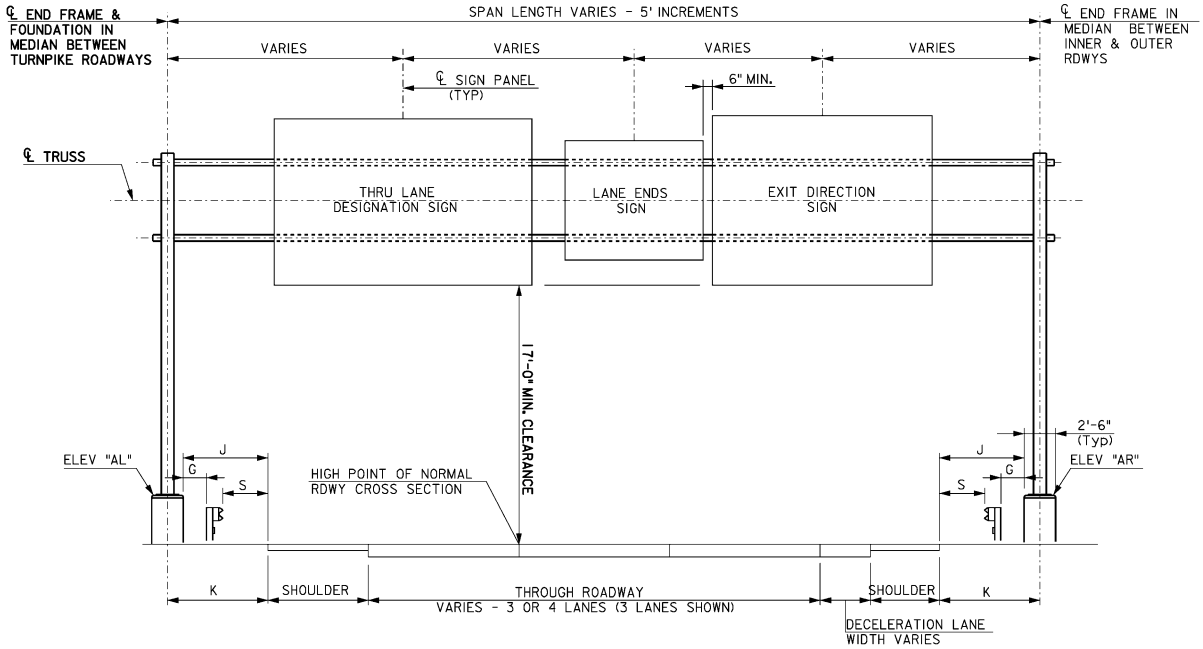

OVERHEAD SPAN STRUCTURE
NTS

NOTES:

1. SEE EXHIBIT 2-404 FOR OVERHEAD SIGN STRUCTURE NOTES.
2. SEE 2-405 FOR ADDITIONAL TABLE.

EXHIBIT 2 – 407
TURNPIKE OVERHEAD SIGN STRUCTURES – 3

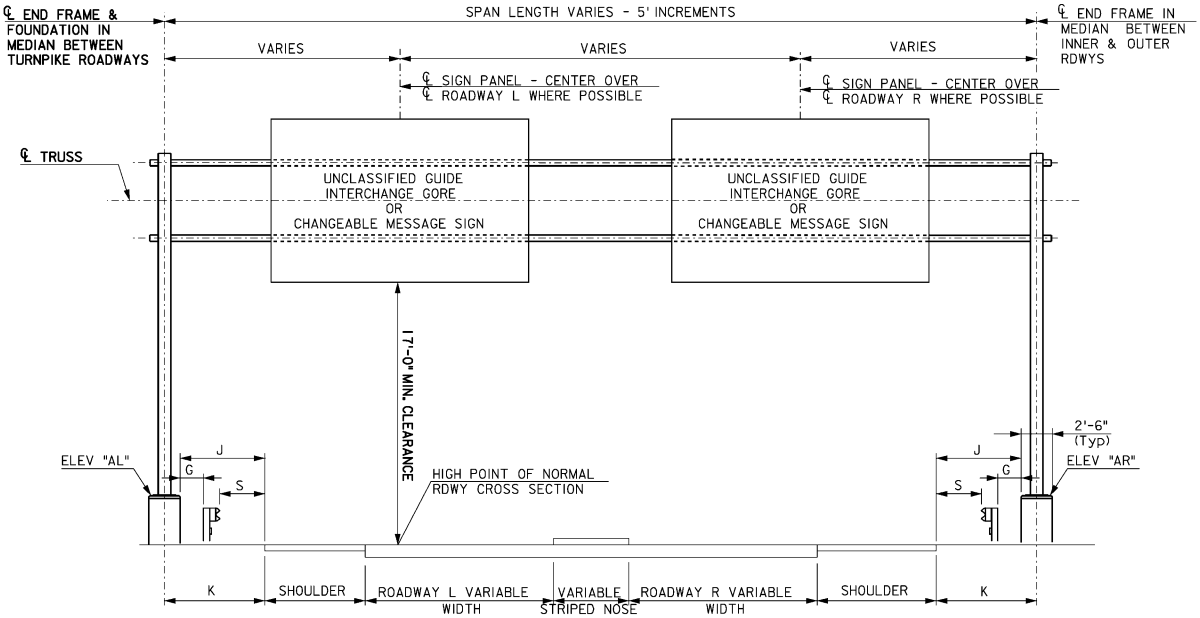

SPAN STRUCTURE - VARIABLE WIDTH ROADWAY
NTS

NOTES:

1. SEE EXHIBIT 2-404 FOR OVERHEAD SIGN STRUCTURE NOTES.
2. SEE 2-405 FOR ADDITIONAL TABLE.

EXHIBIT 2 - 408
TURNPIKE OVERHEAD SIGN STRUCTURES – 4

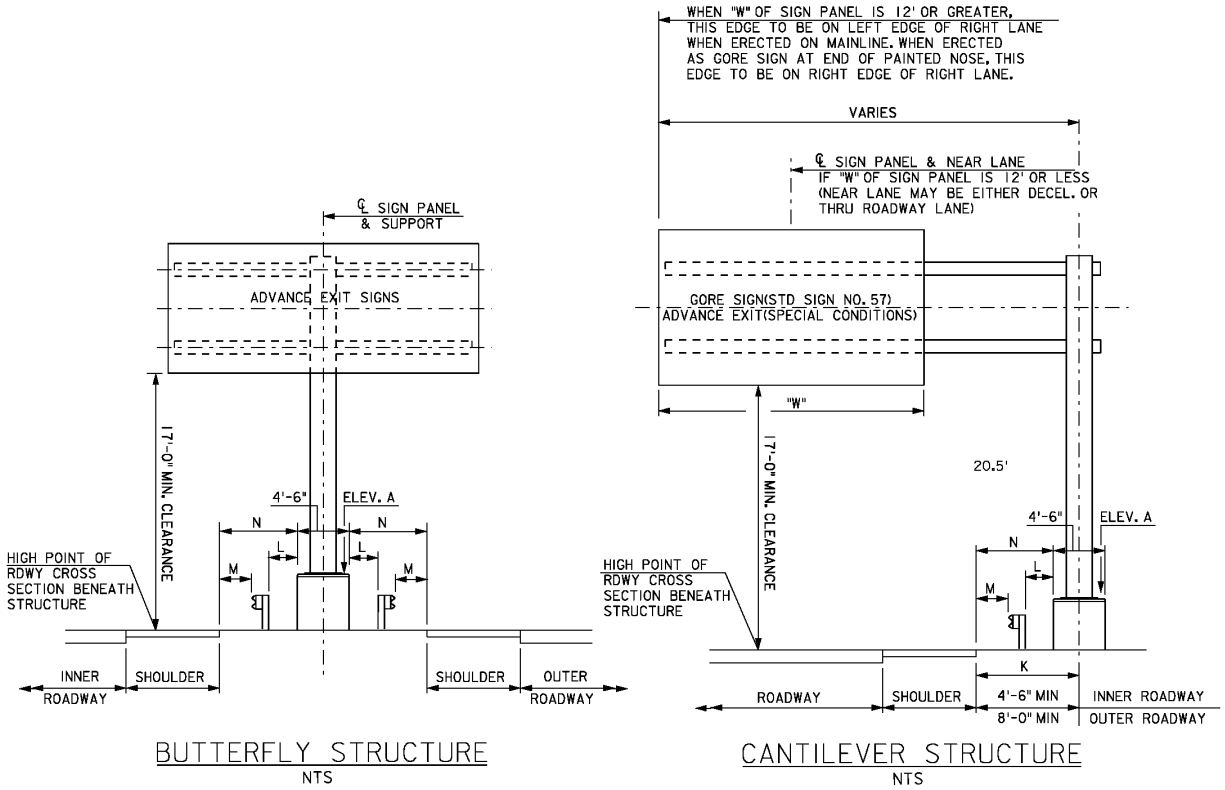

	WHEN K=4'-6"	WHEN K=8'-0"
L	10"	2'-4"
M	0"	2'-0"
N	2'-3"	5'-9"

WHEN K IS GREATER THAN 8'-0", GUIDE RAIL CRITERIA TO GOVERN.
WHEN K IS LESS THAN 4'-6" CONCRETE BARRIER PROTECTION SHALL BE USED.

NOTES:

1. SEE EXHIBIT 2-404 FOR OVERHEAD SIGN STRUCTURE NOTES.

EXHIBIT 2 - 409
PARKWAY OVERHEAD SIGN STRUCTURES – 1

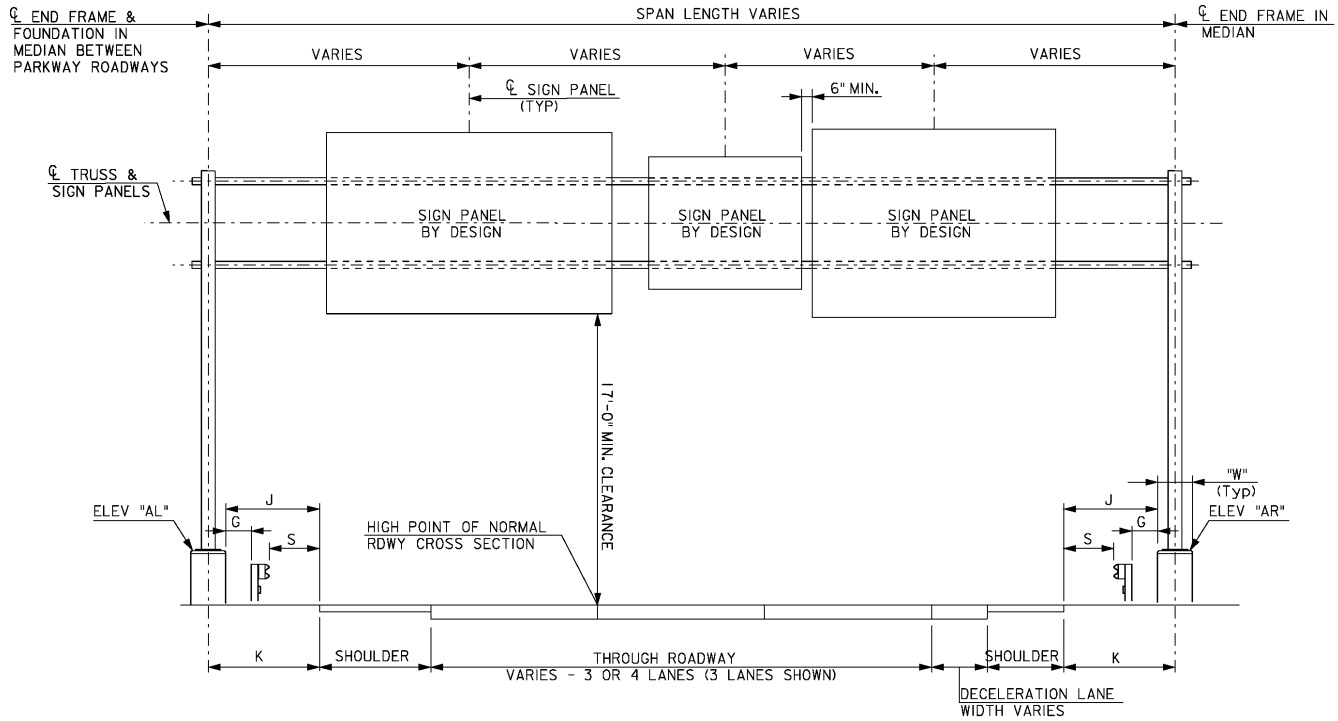

OVERHEAD SPAN STRUCTURE
NTS

NOTES:

1. SEE EXHIBIT 2-404 FOR OVERHEAD SIGN STRUCTURE NOTES.
2. SEE 2-410 FOR ADDITIONAL TABLES.

EXHIBIT 2 - 410
PARKWAY OVERHEAD SIGN STRUCTURES – 2

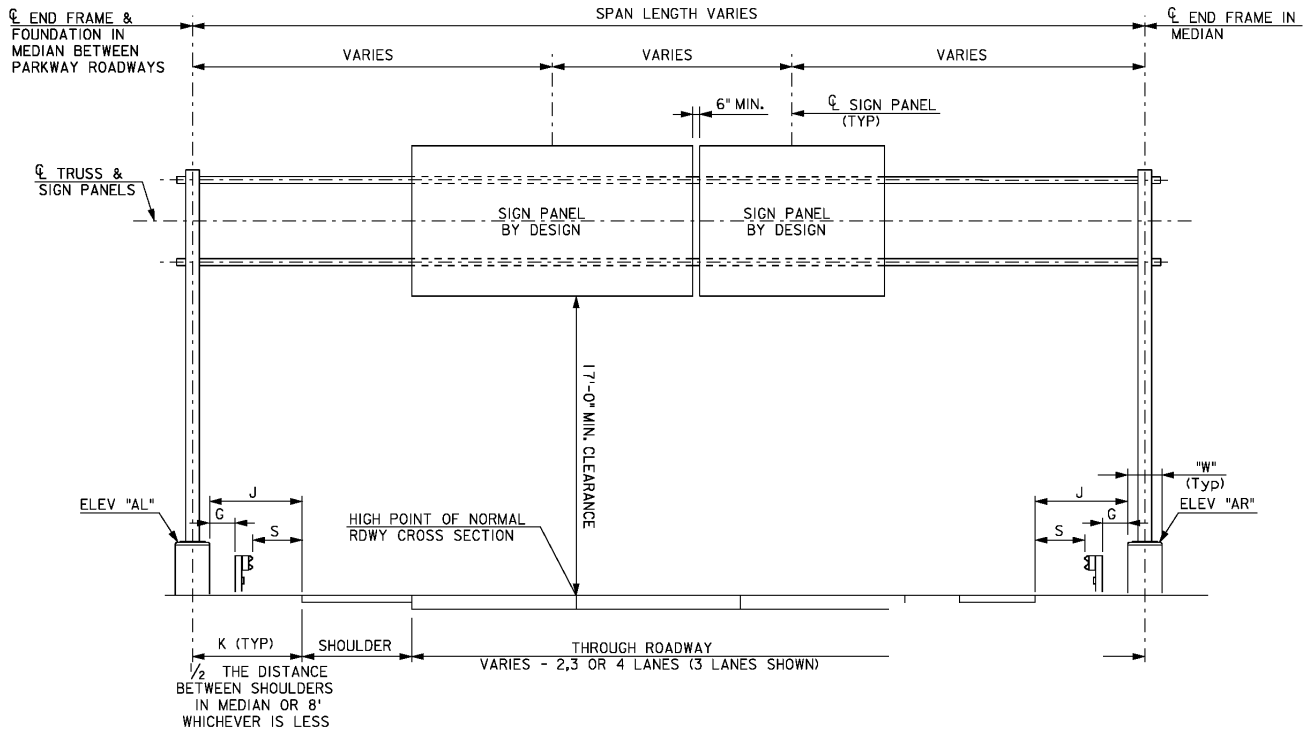

	W=3'-6"	
	WHEN K=4'-6"	WHEN K=8'-0"
G	1'-4"	2'-10"
S	0"	2'-0"
J	2'-9"	6'-3"

	W=4'-6"	
	WHEN K=4'-6"	WHEN K=8'-0"
G	10"	2'-4"
S	0"	2'-0"
J	2'-3"	5'-9"

WHEN K IS GREATER THAN 8'-0", GUIDE RAIL CRITERIA TO GOVERN.
WHEN K IS LESS THAN 4'-6" CONCRETE BARRIER PROTECTION SHALL BE USED.

OVERHEAD SPAN STRUCTURE
NTS

NOTES:

1. SEE EXHIBIT 2-404 FOR OVERHEAD SIGN STRUCTURE NOTES.

EXHIBIT 2 - 411
PARKWAY OVERHEAD SIGN STRUCTURES – 3

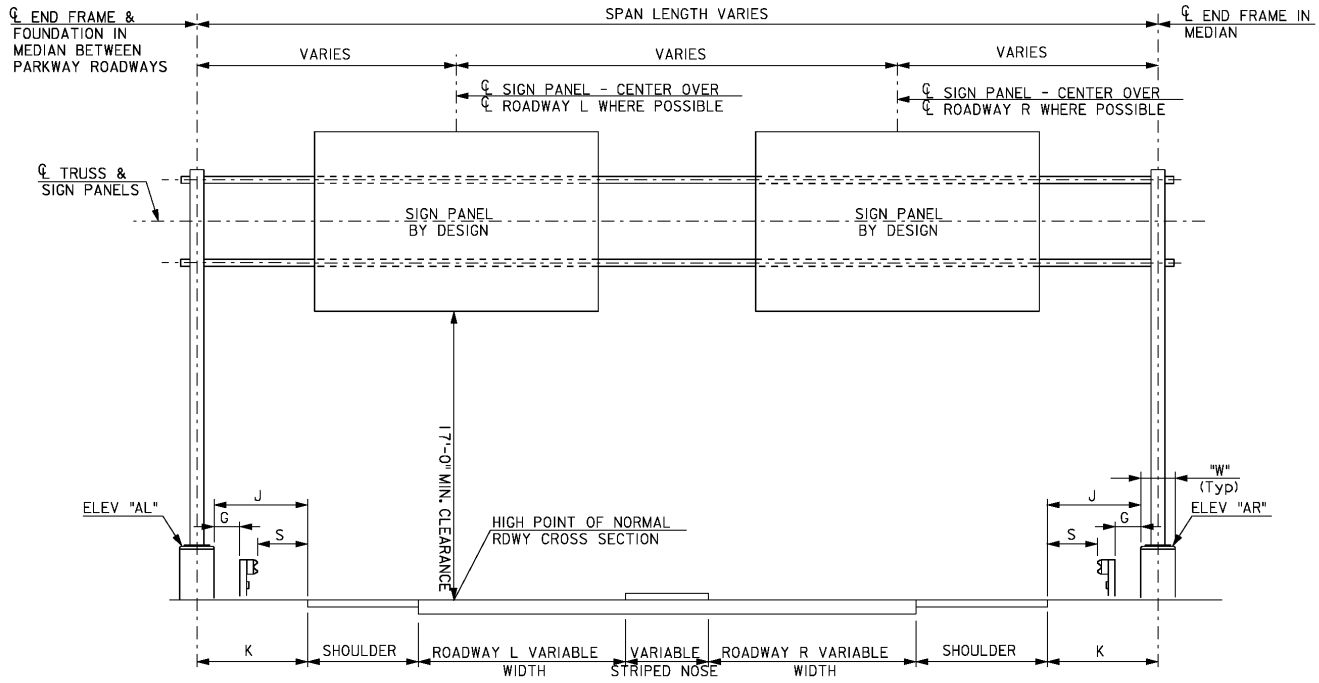

SPAN STRUCTURE - VARIABLE WIDTH ROADWAY
NTS

NOTES:

1. SEE EXHIBIT 2-404 FOR OVERHEAD SIGN STRUCTURE NOTES.
2. SEE 2-410 FOR ADDITIONAL TABLES.

EXHIBIT 2 - 412
PARKWAY OVERHEAD SIGN STRUCTURES – 4

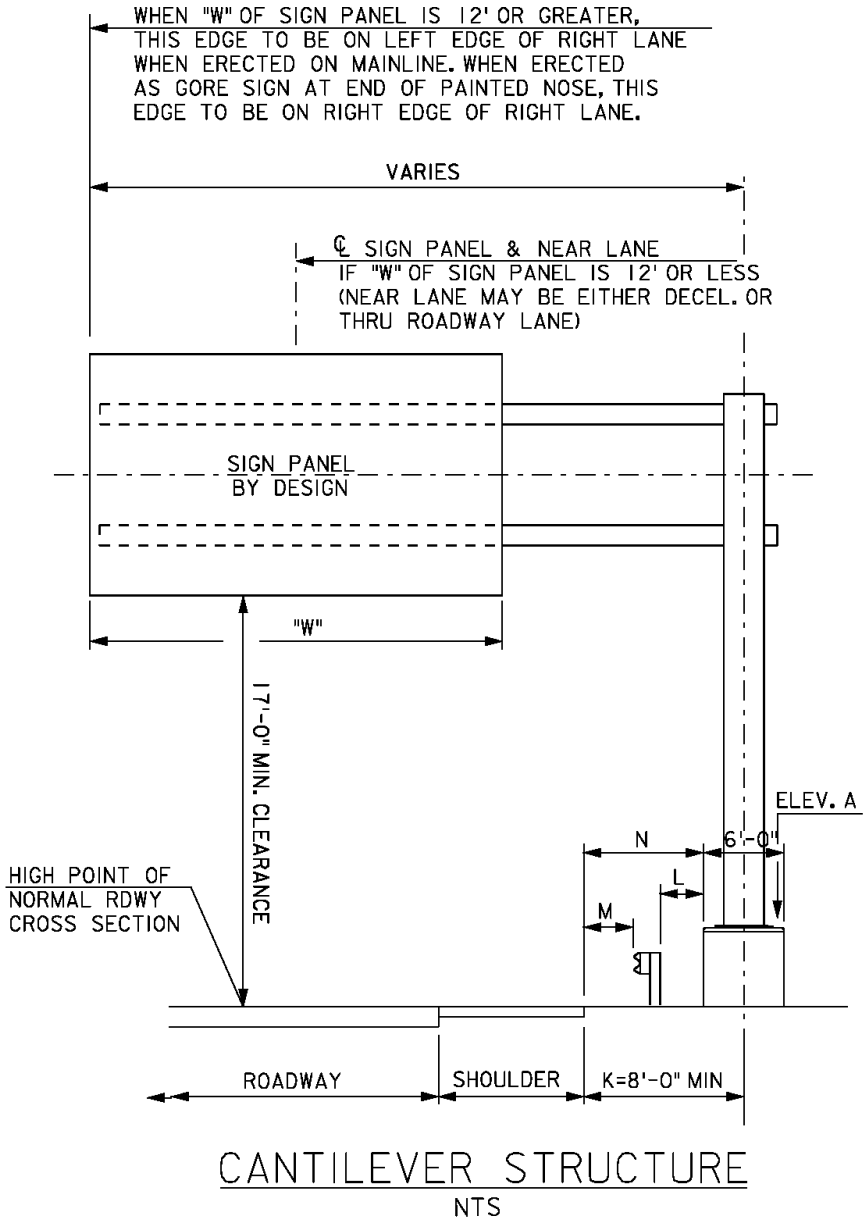

CANTILEVER STRUCTURE
NTS

	WHEN K=8'-0"
L	1'-7"
M	2'-0"
N	5'-0"

NOTES:

1. SEE EXHIBIT 2-404 FOR OVERHEAD SIGN STRUCTURE NOTES.

EXHIBIT 2 – 413
ANTI-SNAG NOSING DETAILS – 1

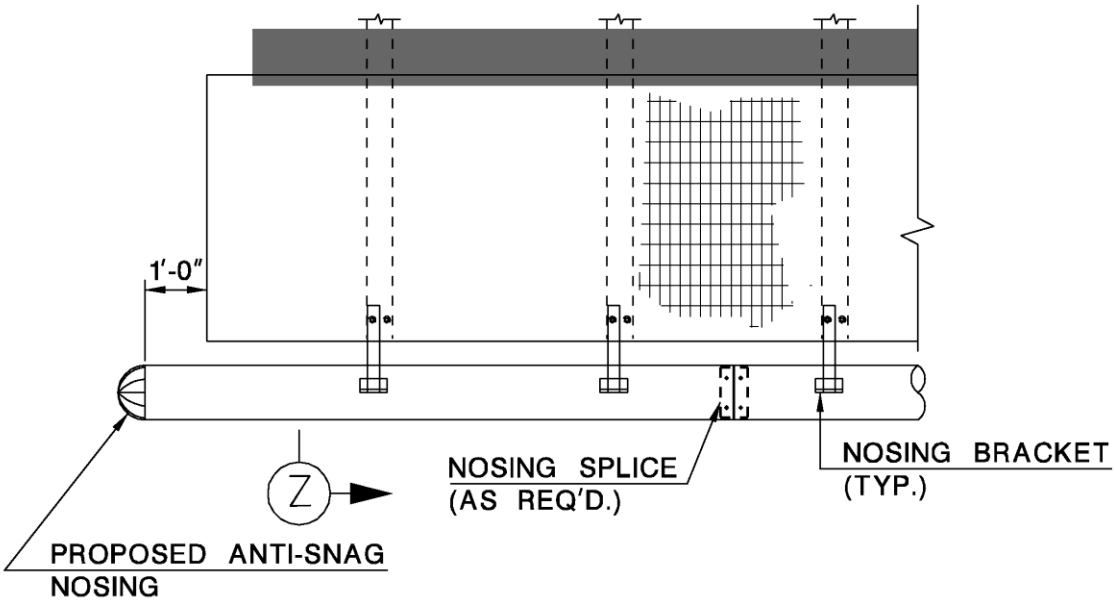

SIGN STRUCTURE WALKWAY PLAN

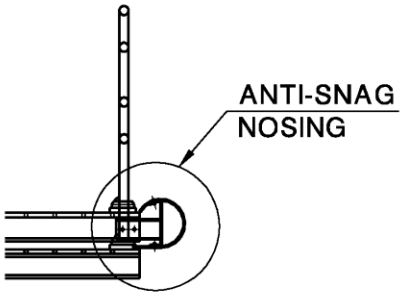

SECTION Z-Z

NOTES:

1. All shapes, plates, brackets, hardware and fabrications shown for the Anti-Snag Nosing shall be made from 6061-T6 Aluminum unless otherwise noted.
2. Anti-Snag attachment hardware shall be 18-18 Stainless Steel, Bolts shall be button-head cap screws, McMaster-Carr Part No. 92949A587 or approved equal. Locking Nuts, shall be low-profile type with nylon inserts, McMaster-Carr Part No. 90101A237 or approved equal.

Note:
Use This Detail for Existing Bridge Mounted Signs Only.

EXHIBIT 2 - 414
ANTI-SNAG NOSING DETAILS – 2

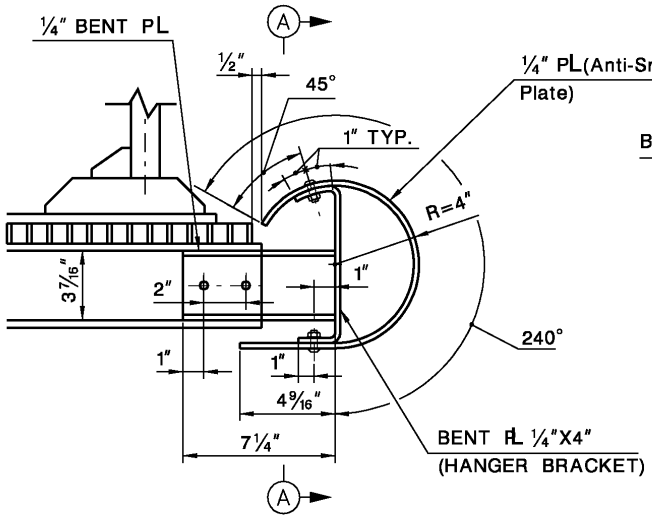

ANTI-SNAG DETAIL SECTION AT HANGER BRACKET

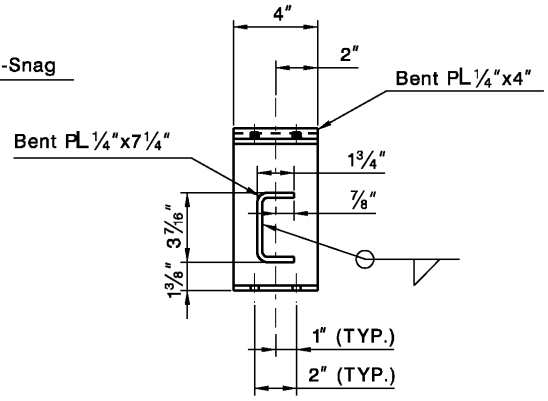

SECTION A-A
(HANGER BRACKET)
ANTI-SNAG PLATE NOT SHOWN FOR CLARITY

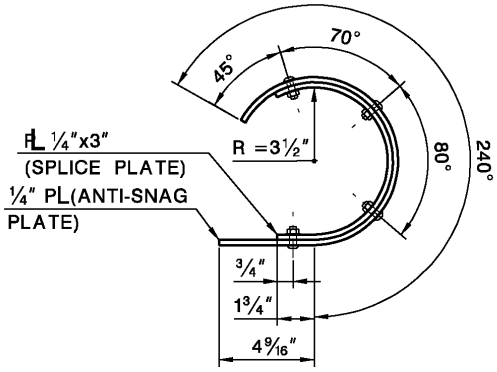

SECTION AT SPLICE PLATE
(SPLICE PLATE)

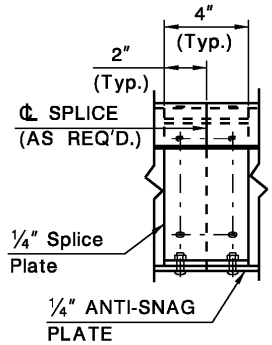

REAR ELEVATION AT SPLICE PLATE

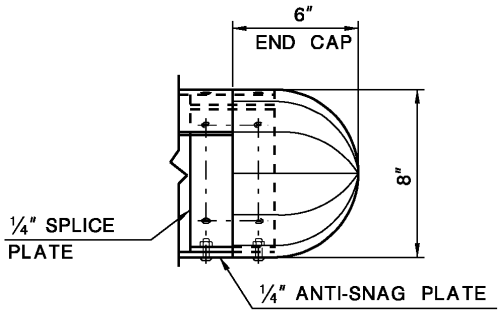

REAR ELEVATION AT END CAP

Notes:
For Notes See Exhibit 2-413
Use this Detail for Existing Bridge Mounted Signs Only.

SERIES 500 – PROPRIETARY WALL SERIES

EXHIBIT 2 - 500
PROPRIETARY RETAINING WALL DETAILS – 1

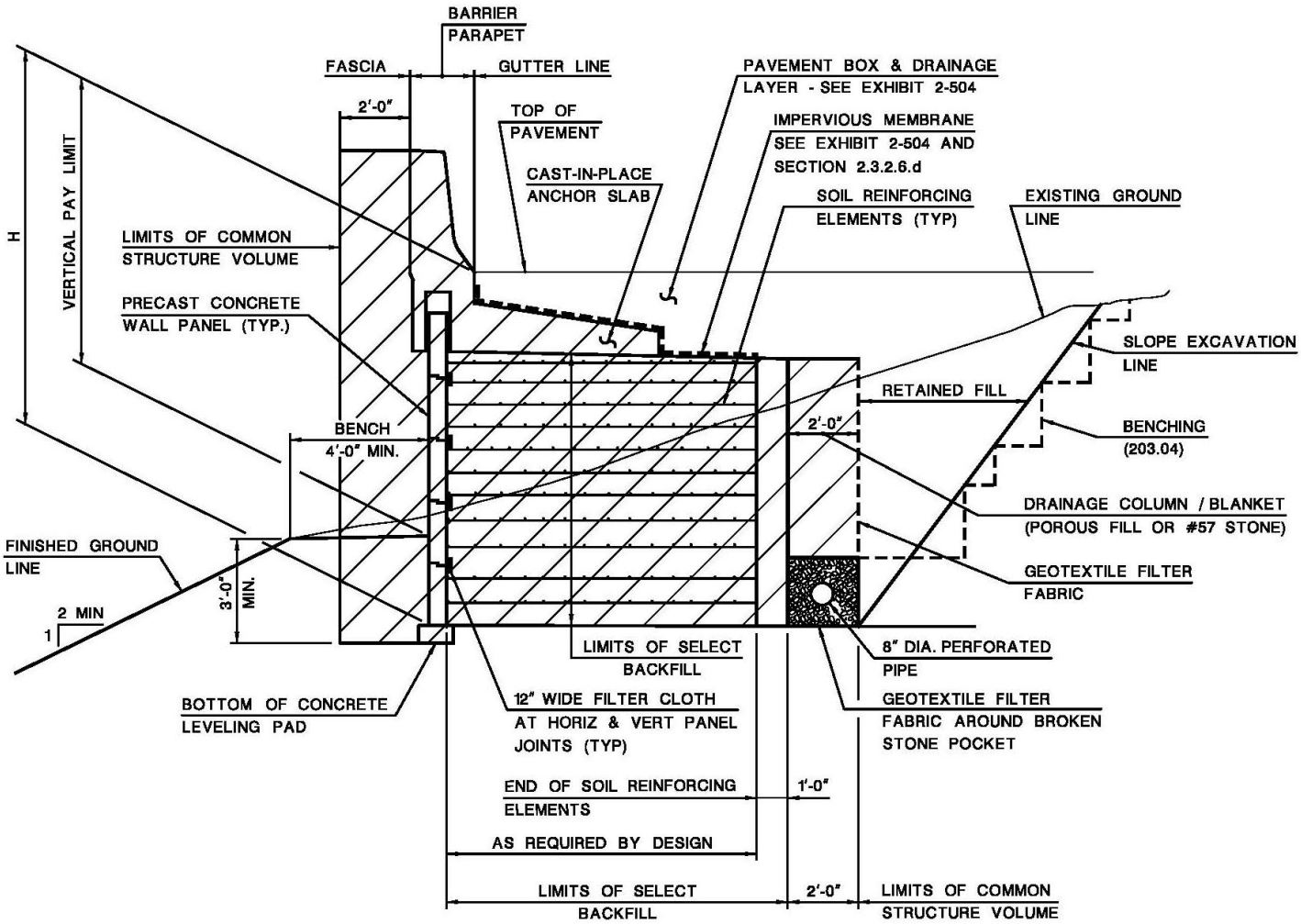

PROPRIETARY WALL SECTION

(MSE SHOWN)
(CUT SHOWN)

EXHIBIT 2 - 501
PROPRIETARY RETAINING WALL DETAILS – 2

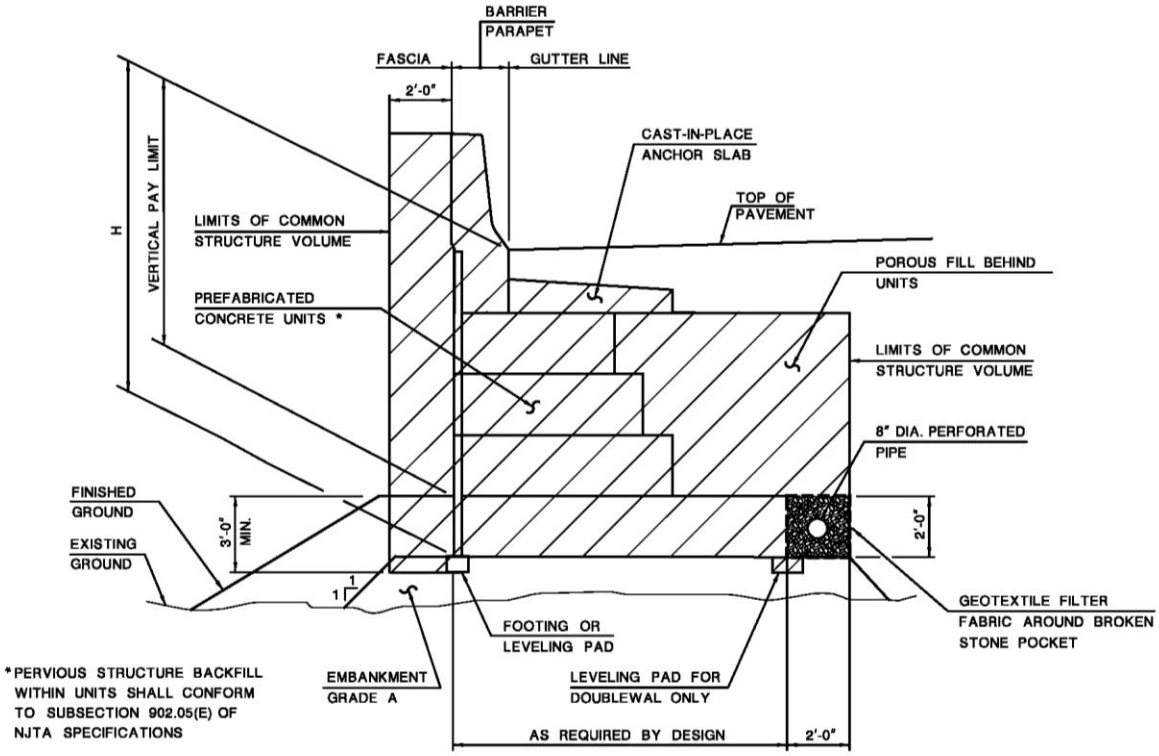

PROPRIETARY WALL SECTION

(PREFABRICATED MODULAR WALL SHOWN)
(FILL SHOWN)

EXHIBIT 2 - 502
PROPRIETARY RETAINING WALL DETAILS – 3

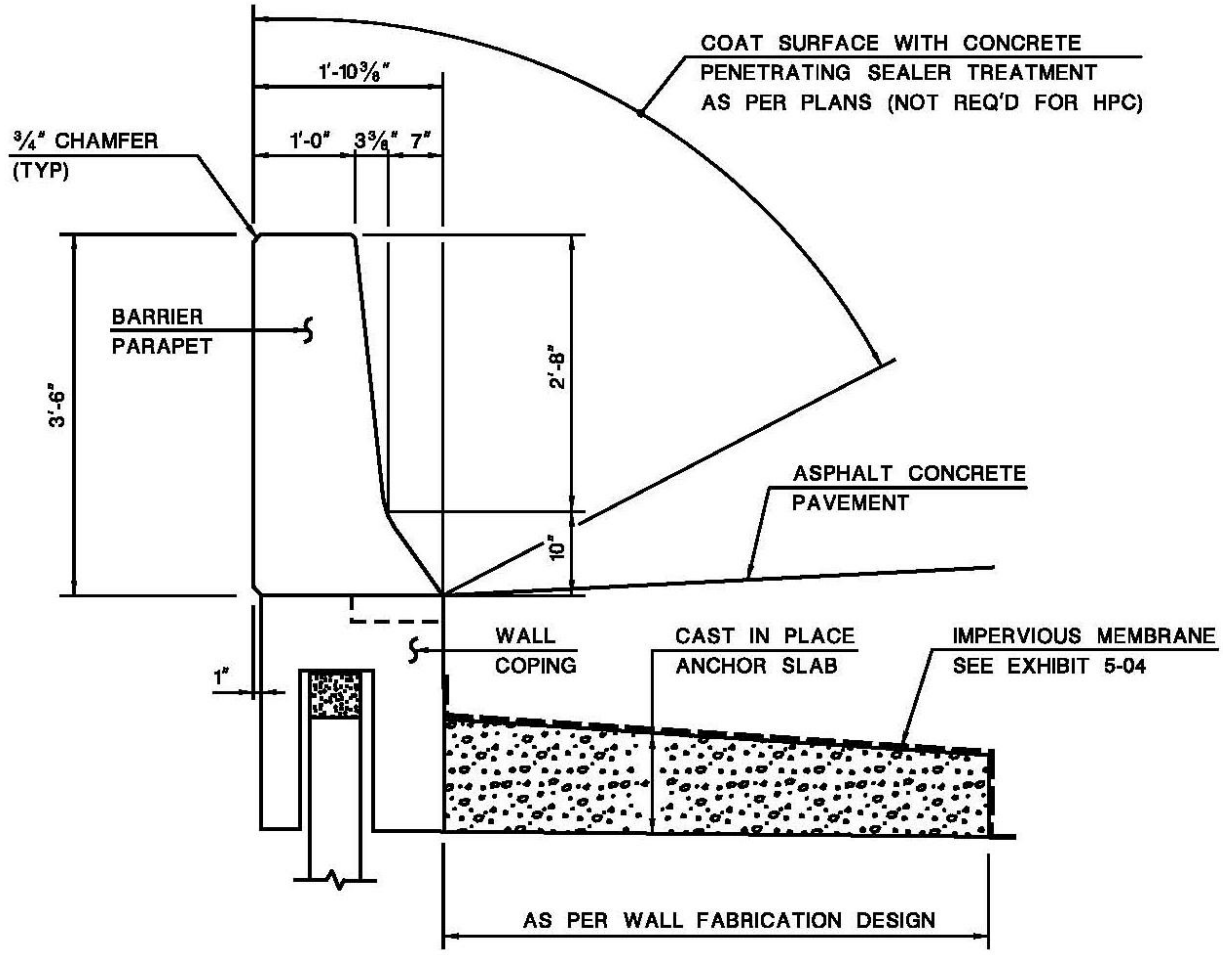

PRECAST CONCRETE BARRIER SECTION

(FOR PROPRIETARY WALLS)

EXHIBIT 2 - 503
PROPRIETARY RETAINING WALL DETAILS – 4

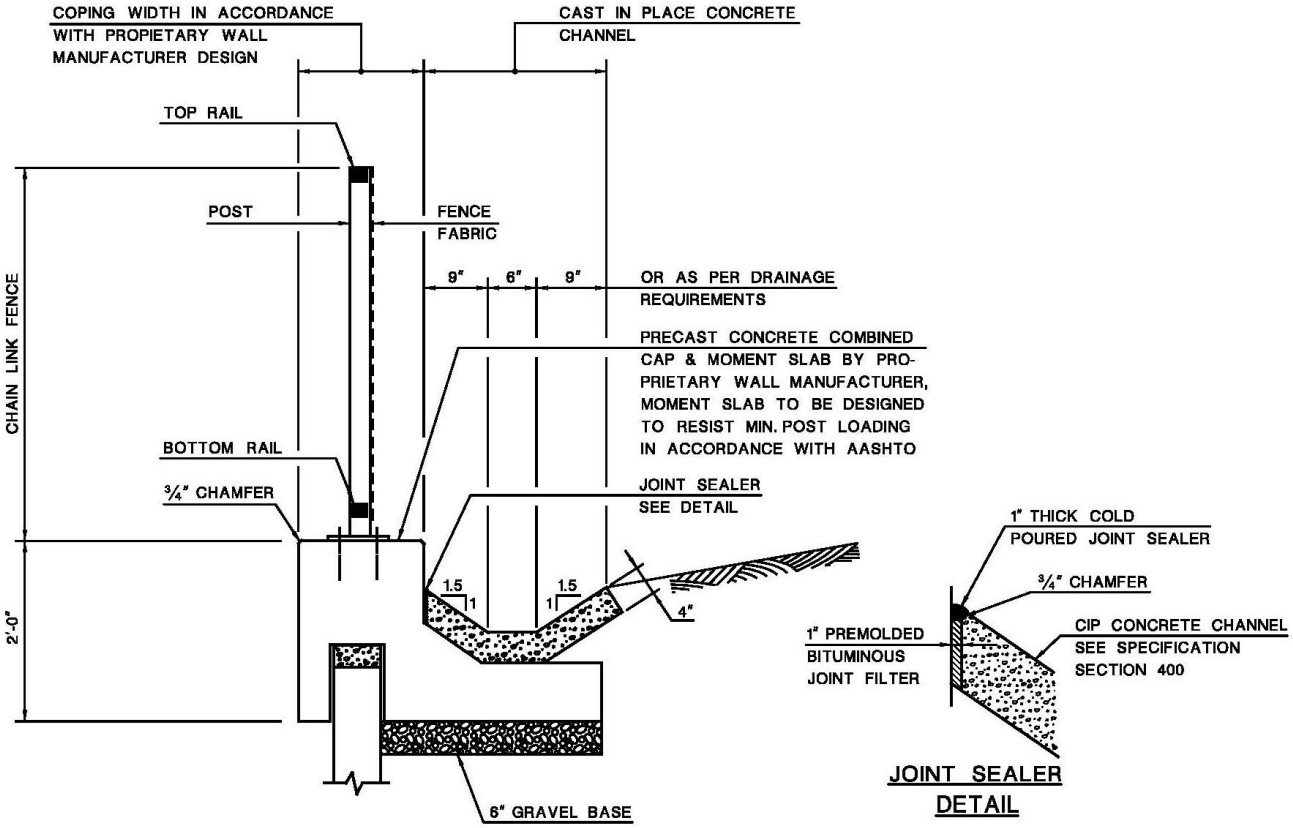

FENCE CAP AND MOMENT SLAB DETAIL FOR PROPRIETARY WALLS

EXHIBIT 2 - 504
PROPRIETARY RETAINING WALL DETAILS – 5

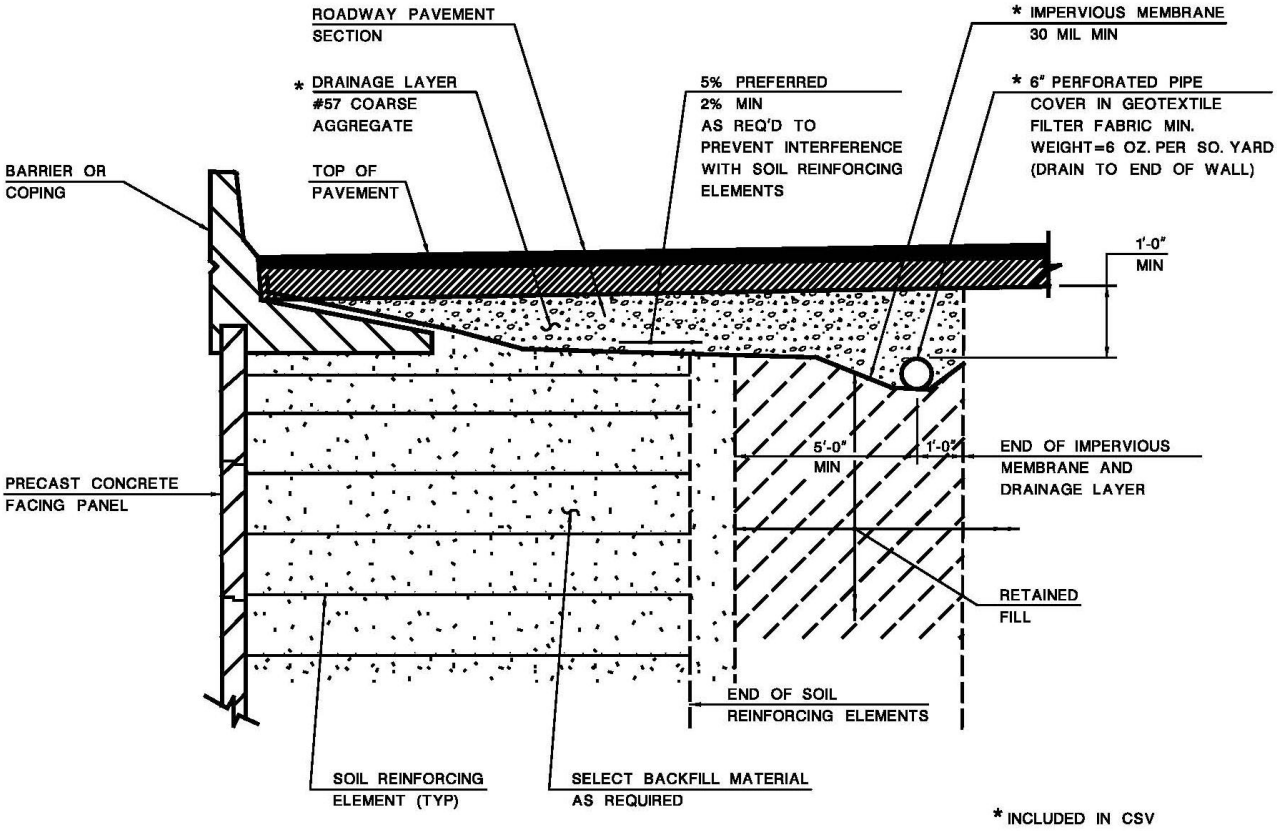

IMPERVIOUS MEMBRANE DETAIL

(PROPRIETARY RETAINING WALL DETAIL-5)
(MSE WALLS)

EXHIBIT 2 - 505
PROPRIETARY RETAINING WALL DETAILS – 6

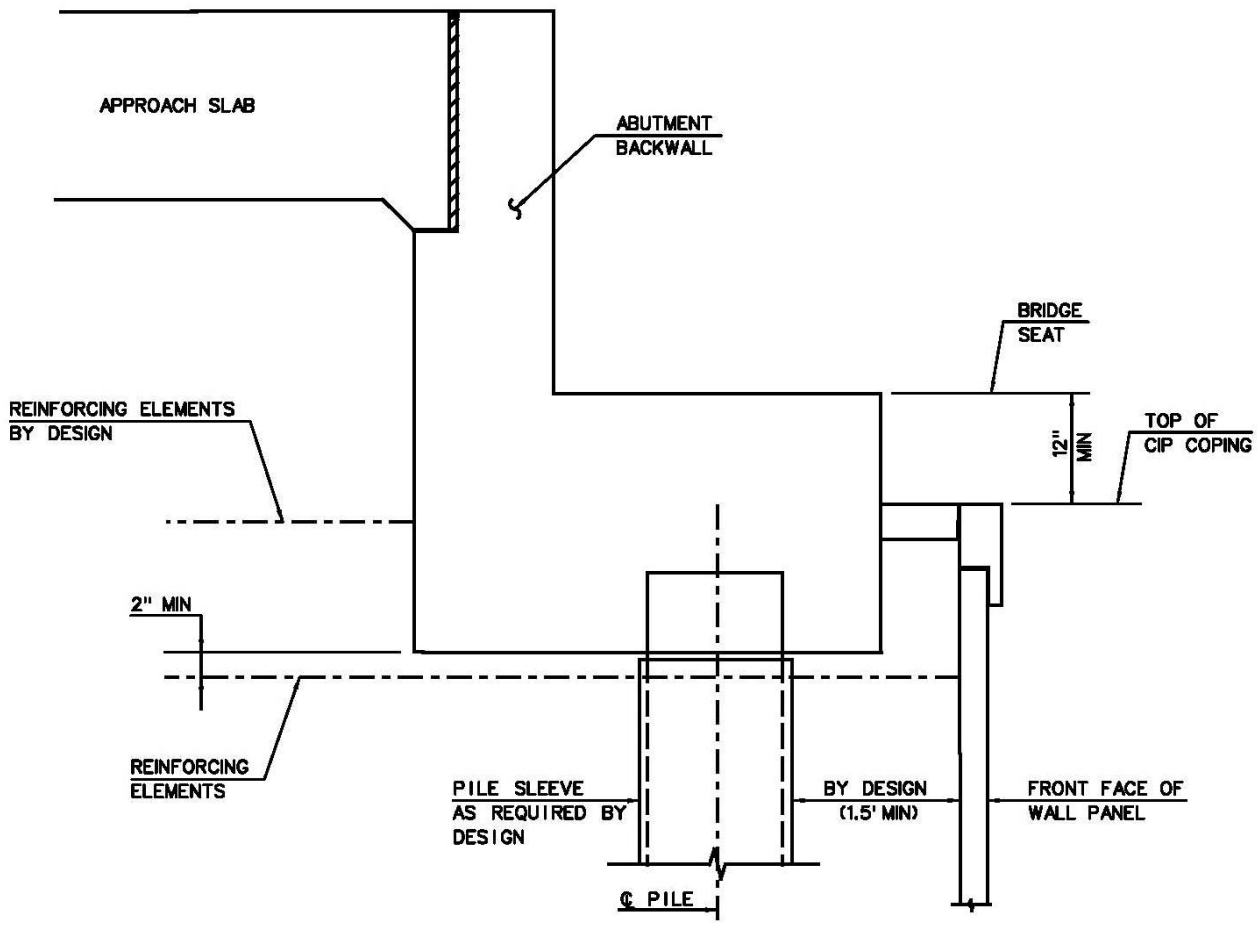

MSE ABUTMENT