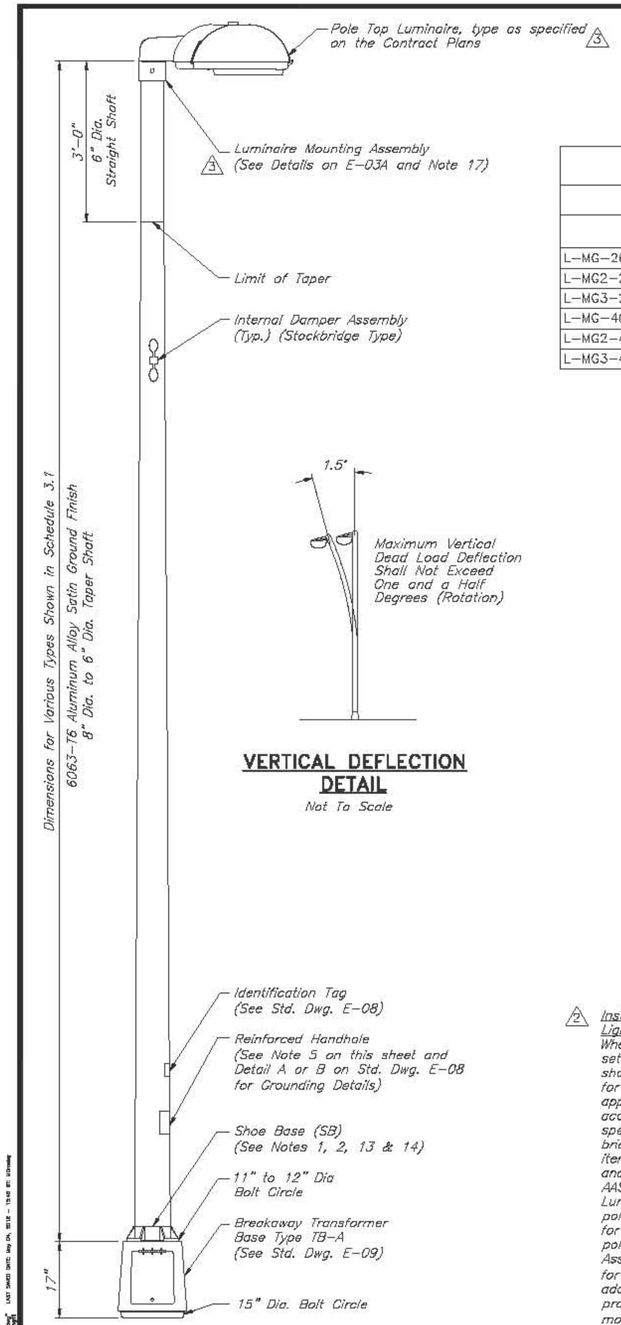

LIGHTING STANDARD ASSEMBLY TYPE L-MG 3

Scale: 3/4" = 1'

	BY	DATE
MADE	EMG	05/2009
TRACED	MDC	05/2009
CHECKED	EMG	05/2009
SUPERVISED	ALB	05/2009

VERTICAL DEFLECTION DETAIL

Not To Scale

SCHEDULE 3.1

LIGHTING STANDARD TYPE					MAX. LUMINAIRE SIZE (Individual Luminaire)	
TYPES	3 # OF LUMINAIRES	SHAFT DIMENSIONS TAPER	MIN. WALL THICKNESS	LENGTH	WEIGHT	PROJ.AREA SQ.FT.
L-MG-26/L-MG-26-SB	1	8"x6"	.188"	22'	60#	2.5
L-MG2-26/L-MG2-26-SB	2	8"x6"	.188"	22'	60#	2.5
L-MG3-26/L-MG3-26-SB	3	8"x6"	.188"	22'	60#	2.5
L-MG-40/L-MG-40-SB	1	8"x6"	.250"	37'	60#	2.5
L-MG2-40/L-MG2-40-SB	2	8"x6"	.250"	37'	60#	2.5
L-MG3-40/L-MG3-40-SB	3	8"x6"	.250"	37'	60#	2.5

2 *Instruction To Designers for Product Inclusion on The List of Approved Bridge Light Standard Vendors:*
Where lighting standards are to be placed on bridges or structures, a complete set of drawings and calculations signed and sealed by a Professional Engineer shall be submitted by the lighting standard vendor to the engineer of record for review and approval prior to inclusion into the contract specifications as approved bridge lighting standard supplier. Only those vendors who submit acceptable drawings and calculations shall be listed in the contract specifications.Light standard vendors must now examine fatigue issues related to bridge mounted structures prior to being permitted to bid fabrication of these items. Bridge mounted light standards will not be classified as common poles and therefore fatigue design in accordance with the current edition of the AASHTO Standard Specifications for Structural Supports for Highway Signs, Luminaires, and Traffic Signals shall be performed for all bridge mounted light pole designs. Submitted calculations must include strength and fatigue designs for the cast shoe base and associated weldments. For the cast shoe base to pole weldment only, the Authority will permit the use of the Aluminum Association's 2010 Design Manual, Figure 3.1 Detail Category F1, which provides for an allowable constant amplitude fatigue threshold (CAFL) of 3.2 ksi. In addition to these fatigue design provisions, all aluminum light standards shall be provided with vibration damping mechanisms capable of damping both first mode (cantilever sway) and second mode (S-shape) vibration behaviors.

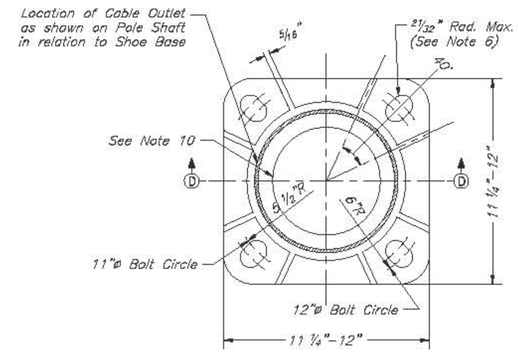

Aluminum Alloy 356-T6 ASTM Spec No. Sand Cst'g B26 or Perm. Mold Cst'g B108 ASTM Alloy Desig. SG 70A

PLAN

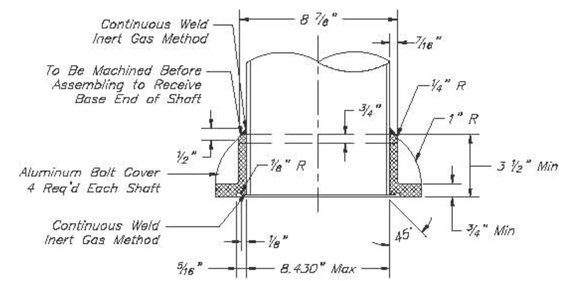

SECTION D-D

ALUMINUM SHOE BASE (SB)

Scale: 1/4" = 1"

NOTES

1. Certifications shall be furnished that aluminum alloy and temper shown meet requirements as set forth below or as otherwise indicated on drawing. Aluminum castings, permanent or sand mold for clamps, and shoe base, trade designation 356-T6.

3 2. Furnish with each pole:

   For luminaire mounting assembly to pole:
   All hardware listed on Std. Dwg. E-03A details.

   For pole connection to transformer base:
   All hardware as shown on Std. Dwg. E-09

3. Aluminum lighting standard assembly and all appurtenances shall be designed to support luminaire(s) of the weight and projected area as called for in Schedule 3.1 on this sheet, for tilt ranges of 0° to 45°.

4. Untapered 8" dia. Section on the 37' shaft will be permitted, but untapered section shall not exceed 25' maximum from base of the shaft.

5. A reinforced flush handhole is required on all Shoe Base (SB) lighting standards and shall be located 20"-24" from base of shaft. When located behind chainlink fence, the handhole shall be located one foot above the fence. A fiberglass handhole cover (modified for UV resistance) shall be used. Handhole cover shall be attached to pole with a 15" long S.S. keeper chain. Screws to be covered with anti-seize 17015 by Loctite Corp. or approved equal.

6. Shoe base holes shall be 1 1/16" in diameter.

7. A ground stud shall be installed opposite the handhole or transformer base door.

8. Ground-mounted lighting standard assemblies shall be provided with transformer bases, and shall be certified by the FHWA as an approved breakaway roadside hardware device to the most current AASHTO standards.

9. Lighting standards shall be designed and manufactured in accordance with the AASHTO Standard Specifications for Structural Supports for Highway Signs, Luminaires and Traffic Signals (latest edition). Features of design not shown but required for fabrication shall be designed in accordance with codes specified on this sheet.

10. Opening shall have a minimum diameter of 6". The geometry shall be determined by the manufacturer.

11. All dimensions of castings shall be +1/32" and -0".

12. The manufacturer shall supply all hardware which is necessary to install the pole.

13. Transformer base not required for all SB (shoe base) lighting standards. Type SB lighting standards shall be mounted directly to bridge parapet blister. (See Std. Dwg. BR-15).

14. All stainless steel hardware shall be Type 304 in accordance with ASTM A193 Grade B8.

15. Each arm shall be 180° away from each other.

16. Inner diameter (I.D.) of mounting assemblies shall have a tolerance of ± 1/16".

3 17. Provide luminaire mounting assemblies as required to support luminaires as specified on the Contract Plans.

3 18. Type H2 and H3 mounting assemblies shall be as shown on the Contract Plans where required.

3 19. For poles other than 6" O.D., the Luminaire Mounting Assembly I.D. shall be adjusted accordingly. Confirm and coordinate prior to fabrication.

If you use this Standard Drawing:	
You also need	E-01,E-03A,E-08,E-09
You may need	E-11, E-12, BR-15

0 1/2 1 2 3 4
ORIGINAL SIZE IN INCHES

APP.	NO.	DATE	REVISION
	3	05/2012	SPLIT TO E-03 AND E-03A, CHANGED DWG TITLE
	2	04/2012	REVISED NOTE TO DESIGNER
	1	11/2011	REVISED NOTE TO DESIGNER
	0	05/2009	ORIGINAL DRAWING

NEW JERSEY TURNPIKE AUTHORITY

NEW JERSEY TURNPIKE

POLE-TOP LIGHTING STANDARD TYPE L-MG

HNTB 145 RT. 46 WEST, SUITE 400, WAYNE, NJ 07470 - COA# 24GA28000700

ANTHONY L. BARTELLO

New Jersey Professional Engineer License No. GE 42846

STANDARD DRAWING E-03

CONTRACT NO. SHEET NO. OF

ACAD FILE NAME: NJTA-SD E-03.dwg Layout: E-03