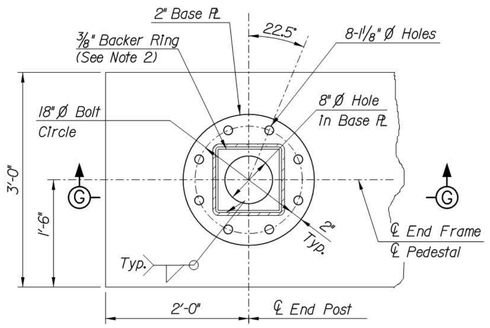

BASE PLATE PLAN VIEW

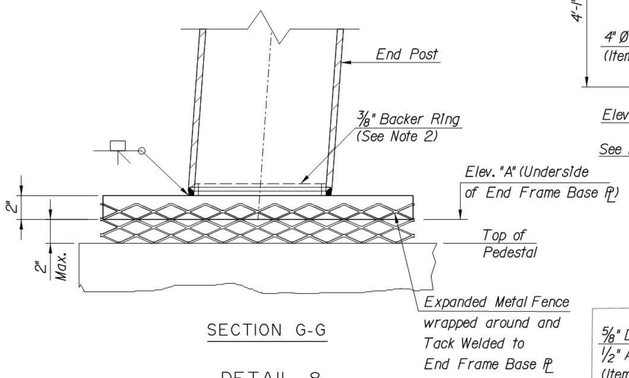

SECTION G-G

DETAIL 8

N.T.S.

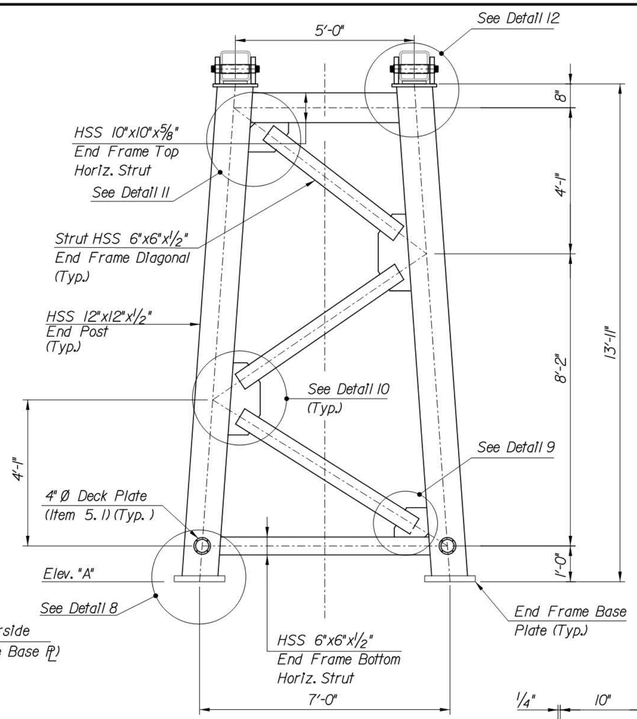

END FRAME ELEVATION

1/2" = 1'-0"

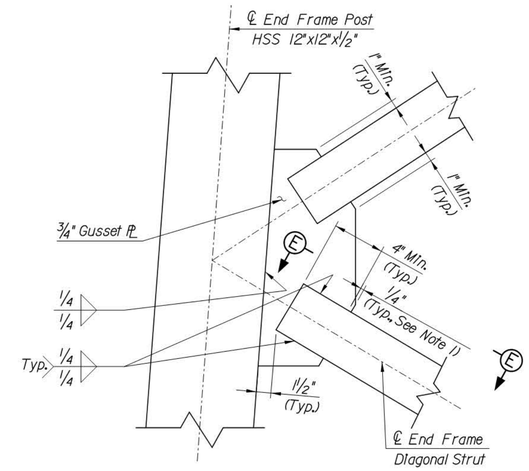

DETAIL 10

1 1/2" = 1'-0"

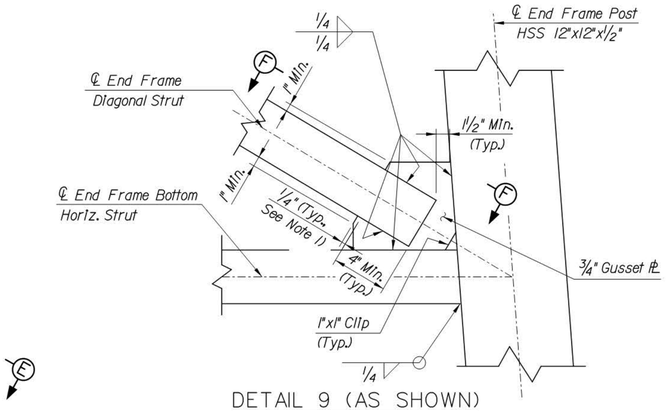

DETAIL 9 (AS SHOWN)

DETAIL 11 (SIMILAR)

1 1/2" = 1'-0"

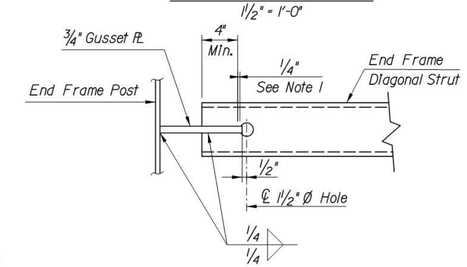

SECTION E-E (AS SHOWN)

SECTION F-F (OPP. HD.)

1 1/2" = 1'-0"

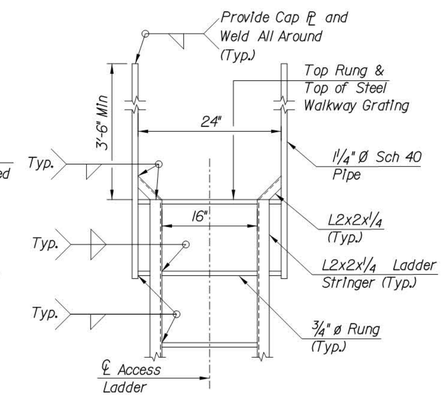

HANDRAIL DETAIL

1" = 1'-0"

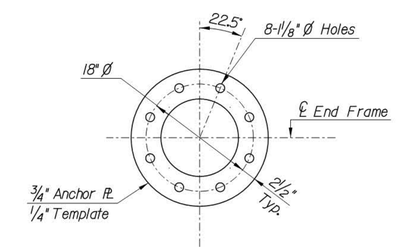

ANCHOR PLATE 8 TEMPLATE DETAIL

(See Sheets VM-8 & VM-9 for placement)

N.T.S.

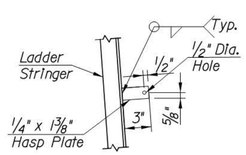

HASP PLATE DETAIL

1 1/2" = 1'-0"

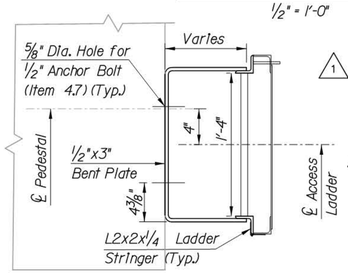

LADDER ATTACHMENT TO PEDESTAL

(For additional details not shown, see Detail 13)

1 1/2" = 1'-0"

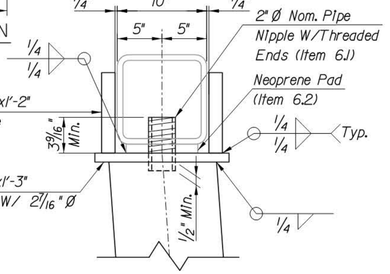

DETAIL 12

1 1/2" = 1'-0"

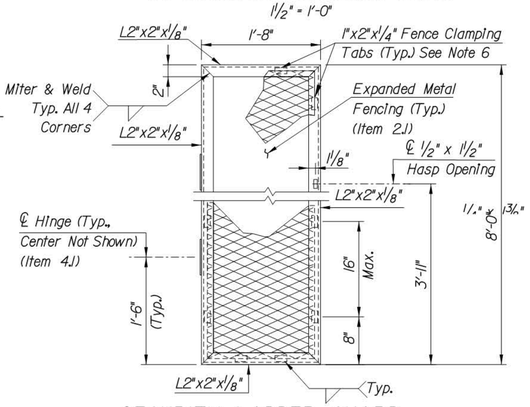

SECURITY LADDER GUARD

1" = 1'-0"

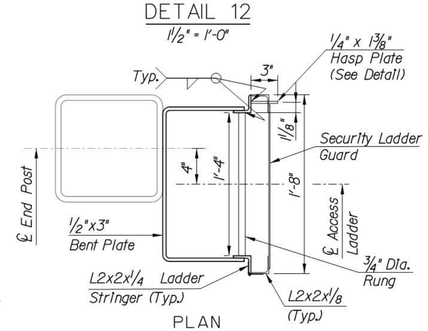

PLAN

DETAIL 13

(See Note 5)

1 1/2" = 1'-0"

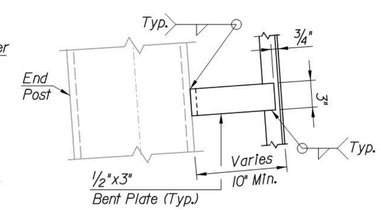

ELEVATION

0 1/2 1 2 3 4

ORIGINAL SIZE IN INCHES

NOTES:

1. Welds for HSS to Gusset Plate Connections shall be terminated 1/4" from the edge of the Gusset Plate.
2. Full penetration welded end post to base plate connection with the backing ring attached to the plate with a continuous fillet weld around the interior face of the backing ring. The thickness of the backing ring shall not exceed 3/8".
3. For Items List, see Sheet VM-10.
4. The two base plate templates for each end frame shall be permanently attached to each other while connected to the end frame to ensure proper placement of the anchor bolts during foundation construction. Each template pair shall be clearly labeled as to the correct end post of the structure and an arrow pointing upstation. All markings shall be visible upon placement.
5. Bent plate supports shall be shop-welded to the end frame and welded or field-bolted with 1/2" dia. bolts to the ladder stringers.
6. Expanded metal fencing shall be rigidly clamped to the door frame angle prior to welding the tabs to ensure a vibration free operation. Spot repair all damaged galvanizing on fencing and hinges after fabrication in accordance with ASTM A-780.
7. For location of Security Ladder Guard, Hasp Plate, Handrail and Detail 13, see Sheet VM-6.

APP.	NO.	DATE	REVISION
	1	4/16	REVISED DETAIL 12
	C	3/14	CONFORMED DRAWING

NEW JERSEY TURNPIKE AUTHORITY

NEW JERSEY TURNPIKE

OVERHEAD SPAN VMS/VSLS SUPPORT STRUCTURES

END FRAME AND LADDER DETAILS

OFFICE OF THE CHIEF ENGINEER
NEW JERSEY TURNPIKE AUTHORITY

WOODBRIDGE NEW JERSEY

2008 STANDARD

DRAWING VM-5

CONTRACT NO.

SHEET NO. OF