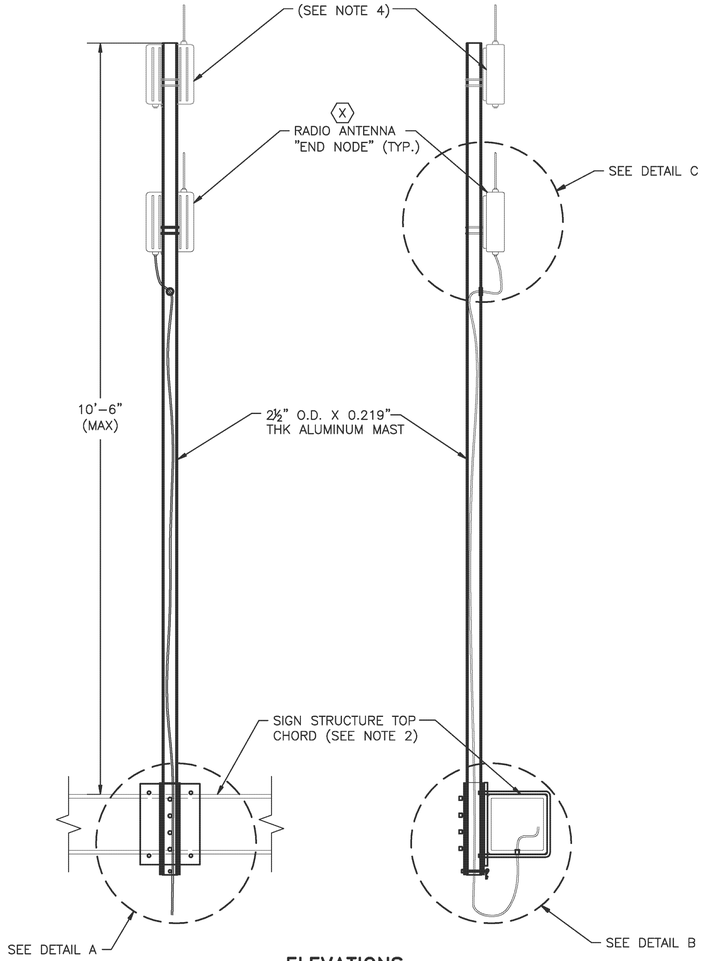

ELEVATIONS
SCALE: 1" = 1'–0"

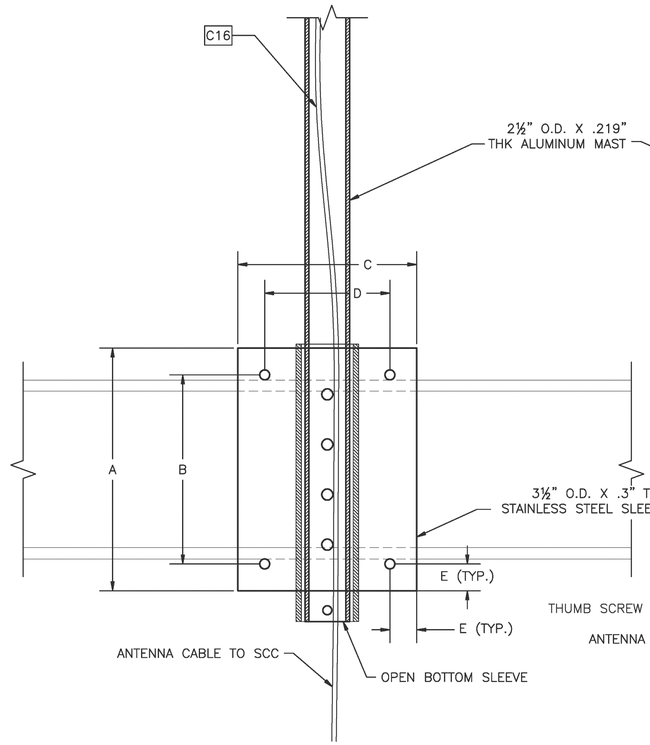

DETAIL A
SCALE: 3" = 1'–0"

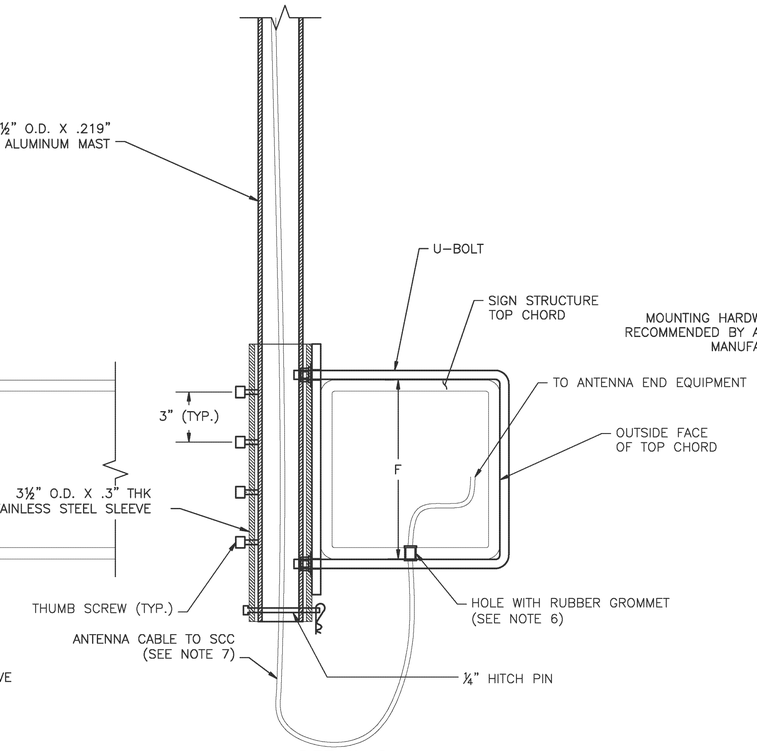

DETAIL B
SCALE: 3" = 1'–0"

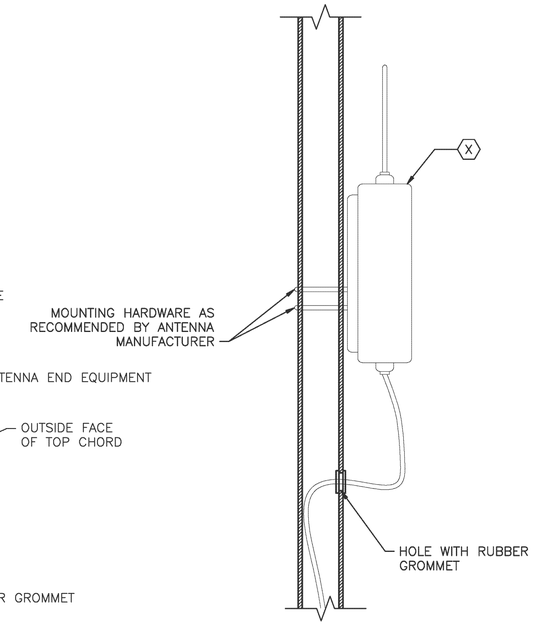

DETAIL C
SCALE: 3" = 1'–0"

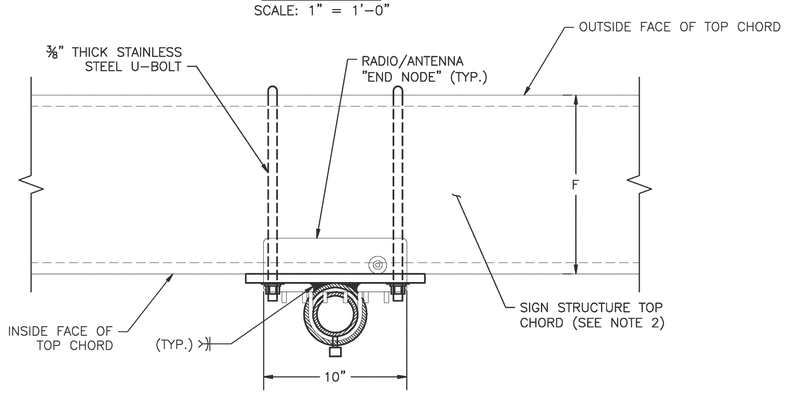

PLAN
SCALE: 3" = 1'–0"

MATERIAL SIZES		
	OVERHEAD STRUCTURE	CANTILEVER & BUTTERFLY STRUCTURE
A	1'–1 9/16"	1'–5 9/16"
B	10 9/16"	1'–2 9/16"
C	10"	10"
D	7"	7"
E	1½"	1½"
F	10"	1'–2"

NOTES:

1. FOR LEGEND, ABBREVIATIONS, AND GENERAL NOTES, SEE DRAWINGS ITS–01 AND ITS–02.
2. TYPICAL INSTALLATIONS SHALL BE APPLIED TO OTHER APPLICABLE INSTALLATION UNLESS OTHERWISE NOTED.
3. SEE VM STANDARD DRAWINGS FOR SIGN STRUCTURE DETAILS.
4. FINAL LOCATION OF THE MOUNT AND MOUNTING HEIGHT OF RADIO ANTENNA SHALL BE COORDINATED WITH THE ENGINEER.
5. FOR OVERHEAD SPAN STRUCTURE, ANTENNA MOUNT SHALL BE INSTALLED ON THE INNER SIDE OF THE TOP CHORD.
6. CONTRACTOR SHALL FIELD DRILL HOLE IN SIGN STRUCTURE AND INSTALL A RUBBER GROMMET TO PULL COMMUNICATIONS CABLE FOR RADIO ANTENNA THROUGH SIGN STRUCTURE. ALL EDGES OF HOLE SHALL BE DEBURRED AND REMOVED OF ANY SHARP EDGES THAT MAY DAMAGE THE CABLE.
7. CONTRACTOR SHALL LEAVE A MINIMUM OF 8' OF SLACK IN COMMUNICATION CABLE TO ALLOW THE LOWERING OF ANTENNA FOR MAINTENANCE. COIL AND SECURE SLACK WITH UV RESISTANT WEATHERPROOF TIES OR AS APPROVED BY THE ENGINEER.

0 ½ 1 2 3 4
ORIGINAL SIZE IN INCHES

	BY	DATE
MADE	EMG	08/2010
TRACED	EMG	08/2010
CHECKED	MS	08/2010
SUPERVISED	ALB	08/2010

APP.	NO.	DATE	REVISION
	0	08/2010	ORIGINAL DRAWING

NEW JERSEY TURNPIKE AUTHORITY
NEW JERSEY TURNPIKE
RADIO ANTENNA MOUNT

HNTB 145 RT. 46 WEST, SUITE 400, WAYNE, NJ 07470 – COA# 24GA28000700
ANTHONY L. BARTELLO
New Jersey Professional Engineer License No. GE 45642

STANDARD DRAWING
ITS–26

CONTRACT NO. SHEET NO. OF

ACAD FILE NAME: NJTA–SD ITS–26.dwg Layout: .Layout1