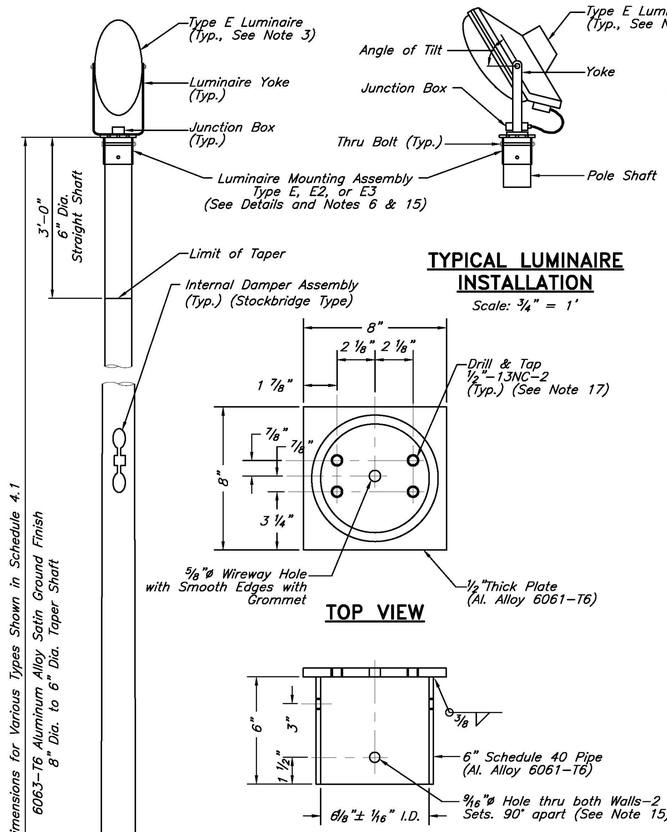

TYPICAL LUMINAIRE INSTALLATION

Scale: 3/4" = 1'

TOP VIEW

LUMINAIRE MOUNTING ASSEMBLY TYPE E

Not To Scale

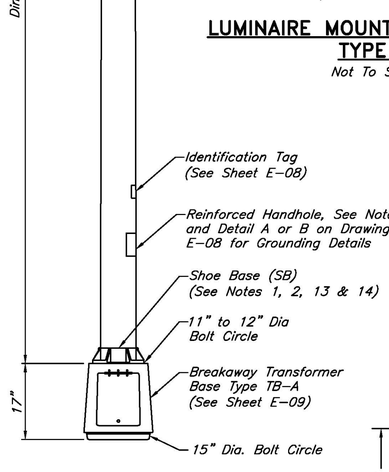

LIGHTING STANDARD ASSEMBLY

Scale: 3/4" = 1'

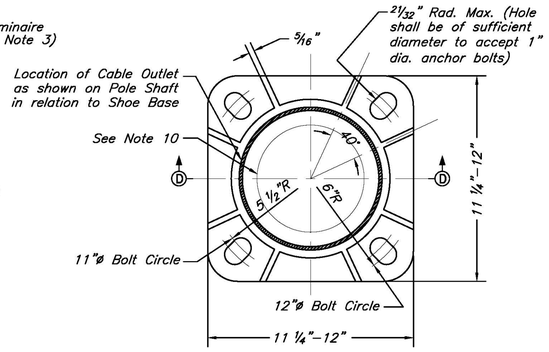

Aluminum Alloy 356-T6 ASTM Spec No. Sand Cst'g B26 or Perm. Mold Cst'g B108 ASTM Alloy Desig. SG 70A

PLAN

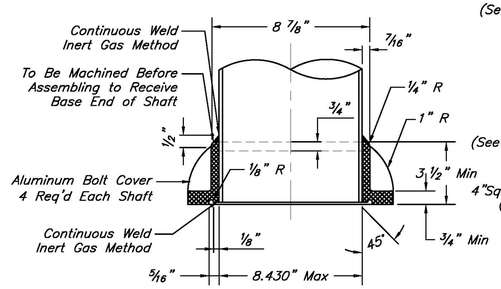

SECTION D-D

ALUMINUM SHOE BASE (SB)

Not To Scale

SCHEDULE 4.1					
LIGHTING STANDARD TYPE				MAX. LUMINAIRE SIZE	
TYPES	SHAFT DIMENSIONS			WEIGHT	PROJ.AREA SQ.FT.
	TAPER	MIN. WALL THICKNESS	LENGTH		
L-E-40 / L-E-40-SB	8"x6"	.250"	37'	100#	3.8
L-E2-40 / L-E2-40-SB	8"x6"	.250"	37'	100#	3.8
L-E3-40 / L-E3-40-SB	8"x6"	.250"	37'	100#	3.8

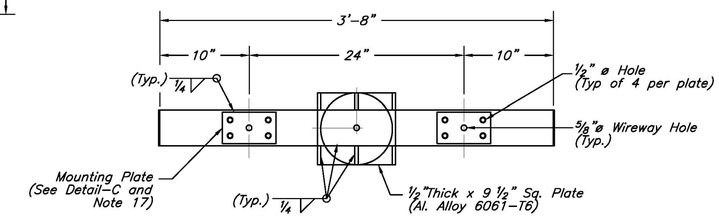

TOP VIEW

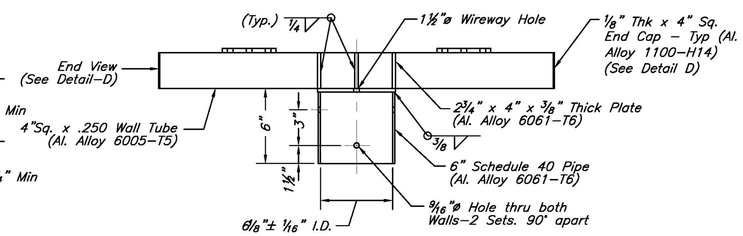

LUMINAIRE MOUNTING ASSEMBLY TYPE E2

Not To Scale

DETAIL D

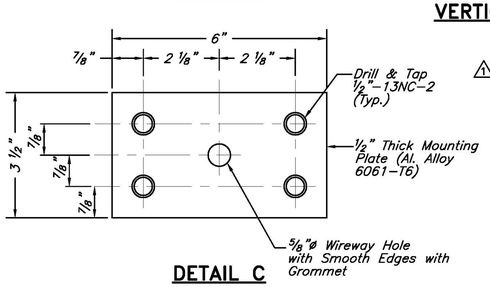

DETAIL C

Scale: 1/2" = 1'

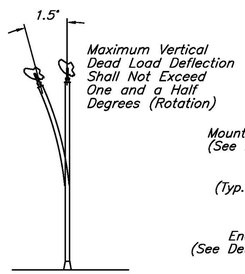

VERTICAL DEFLECTION DETAIL

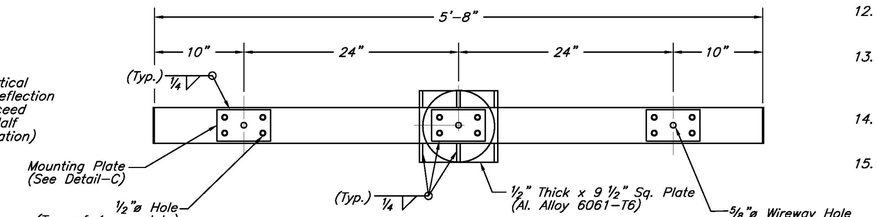

TOP VIEW

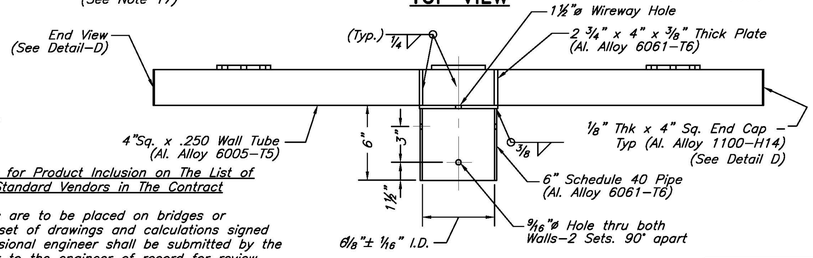

LUMINAIRE MOUNTING ASSEMBLY TYPE E3

Not To Scale

⚠ *Instruction To Designers for Product Inclusion on The List of Approved Bridge Light Standard Vendors in The Contract Specifications:*

Where lighting standards are to be placed on bridges or structures, a complete set of drawings and calculations signed and sealed by a professional engineer shall be submitted by the lighting standard vendor to the engineer of record for review and approval prior to inclusion into the contract specifications as approved bridge lighting standard supplier. Only those vendors who submit acceptable drawings and calculations shall be listed in the contract specifications.

Light standard vendors must now examine fatigue issues related to bridge mounted structures prior to being permitted to bid fabrication of these items. Bridge mounted light standards will not be classified as common poles and therefore fatigue design in accordance with the current edition of the AASHTO Standard Specifications for Structural Supports for Highway Signs, Luminaires, and Traffic Signals shall be performed for all bridge mounted light pole designs.

NOTES

1. Certifications shall be furnished that aluminum alloy and temper shown meet requirements as set forth below or as otherwise indicated on drawing. Aluminum castings, permanent or sand mold for clamps, and shoe base, trade designation 356-T6.
2. Furnish with each pole:

   For luminaire mounting assembly to pole:
   All hardware as shown on the details this sheet.

   For pole connection to transformer base:
   All hardware as shown on Std. Dwg. E-09.
3. Aluminum lighting standard assembly and all appurtenances shall be designed to support luminaire(s) of the weight and projected area as called for in Schedule 4.1 on this sheet, for tilt ranges of 0° to 45°.
4. Untapered 8" dia. Section on the 37' shaft will be permitted, but untapered section shall not exceed 25' maximum from base of the shaft.
5. A reinforced flush handhole is required on all Shoe Base (SB) lighting standards and shall be located 20"-24" from base of shaft. When located behind chainlink fence, the handhole shall be located one foot above the fence. A fiberglass handhole cover (modified for UV resistance) shall be used. Handhole cover shall be attached to pole with a 15" long S.S. keeper chain. Screws shall be S.S. and shall be covered with anti-seize 17015 by Loctite Corp. or approved equal.
6. Shoe base holes shall be 11/16" in diameter.
7. A ground stud shall be installed opposite the handhole or transformer base door.
8. Ground-mounted lighting standard assemblies shall be provided with transformer bases, and shall be certified by the FHWA as an approved breakaway roadside hardware device to the most current AASHTO standards.
9. Lighting standards shall be designed and manufactured in accordance with the AASHTO Standard Specifications for Structural Supports for Highway Signs, Luminaires and Traffic Signals (latest edition). Features of design not shown but required for fabrication shall be designed in accordance with codes specified on this sheet.
10. Opening shall have a minimum diameter of 6". The geometry shall be determined by the manufacturer.
11. All dimensions of castings shall be +1/32" and -0".
12. The manufacturer shall supply all hardware which is necessary to install the pole.
13. Transformer base not required for all SB (shoe base) lighting standards. Type SB lighting standards shall be mounted directly to bridge parapet blister. (See Std. Dwg. BR-15).
14. All stainless steel hardware shall be Type 304 in accordance with ASTM A193 Grade B8.
15. Luminaire Mounting Assemblies shall be fastened to pole shaft with 2 sets of 1/2"ø thru bolts, flat washers, lock washers and nuts, all stainless steel.
16. Refer to the NJTA Design Manual Section 7 for information on where this drawing may be applicable.
17. Use 1/2"-13NC x 1" long stainless steel hex head bolts to secure luminaire to mounting assembly with washer and lock washer.

If you use this Standard Drawing:	
You also need	E-08, E-09
You may need	E-11, E-12, BR-15

0 1/2 1 2 3 4

ORIGINAL SIZE IN INCHES

USE THIS DRAWING ONLY WHEN APPROVED IN ADVANCE BY THE AUTHORITY

	BY	DATE
MADE	EMG	05/2009
TRACED	MDC	05/2009
CHECKED	EMG	05/2009
SUPERVISED	ALB	05/2009

APP.	NO.	DATE	REVISION
	1	11/2011	REVISED NOTE TO DESIGNER
	0	05/2009	ORIGINAL DRAWING

NEW JERSEY TURNPIKE AUTHORITY

NEW JERSEY TURNPIKE

EXPRESSWAY LIGHTING STANDARD 40 FOOT NOMINAL MOUNTING HEIGHT

HNTB 145 RT. 46 WEST, SUITE 400, WAYNE, NJ 07470 - COA# 24GA28000700

ANTHONY L. BARTELLO

New Jersey Professional Engineer License No. GE 45842

STANDARD DRAWING E-04

CONTRACT NO. SHEET NO. OF

ACAD FILE NAME: NJTA-SD E-04.dwg Layout: E-04