State of New Jersey

DEPARTMENT OF ENVIRONMENTAL PROTECTION
Bureau of Nonpoint Pollution Control
Division of Water Quality
Mail Code 401-02B
Post Office Box 420
Trenton, New Jersey 08625-0420
609-633-7021 Fax: 609-777-0432
http://www.state.nj.us/dep/dwq/bnpc_home.htm

CHRIS CHRISTIE
Governor

KIM GUADAGNO
Lt. Governor

BOB MARTIN
Commissioner

December 21, 2017

Daniel J. Figola, PE
General Manager
BaySaver Technologies, LLC
1030 Deer Hollow Drive
Mt. Airy, MD 21771

Re: MTD Laboratory Certification
BayFilter™ Enhanced Media Cartridge by BaySaver Technologies, LLC
Off-line Installation

TSS Removal Rate 80%

Dear Mr. Figola:

This revised certification letter supersedes the Department's prior certification dated January 10, 2017. The revision was completed to add another Enhanced Media Cartridge model (model 530) to the two previously certified EMC models, 545 and 545LP (now relabeled 522).

The Stormwater Management rules under N.J.A.C. 7:8-5.5(b) and 5.7(c) allow the use of manufactured treatment devices (MTDs) for compliance with the design and performance standards at N.J.A.C. 7:8-5 if the pollutant removal rates have been verified by the New Jersey Corporation for Advanced Technology (NJCAT) and have been certified by the New Jersey Department of Environmental Protection (NJDEP). BaySaver Technologies, LLC has requested a Laboratory Certification for the BayFilter™ System.

This project falls under the "Procedure for Obtaining Verification of a Stormwater Manufactured Treatment Device from New Jersey Corporation for Advanced Technology" dated January 25, 2013. The applicable protocol is the "New Jersey Department of Environmental Protection Laboratory Protocol to Assess Total Suspended Solids Removal by a Filtration Manufactured Treatment Device" dated January 25, 2013.

NJCAT verification documents submitted to the NJDEP indicate that the requirements of the afore-mentioned protocol have been met or exceeded. The NJCAT letter also included a recommended certification TSS removal rate and the required maintenance plan. The NJCAT Verification Report with

the Verification Appendix for this device is published online at http://www.njcat.org/verification-process/technology-verification-database.html.

The NJDEP certifies the use of the BayFilter™ by BaySaver Technologies, LLC at a TSS removal rate of 80%, when designed, operated and maintained in accordance with the information provided in the Verification Appendix and subject to the following conditions:

1. The maximum treatment flow rate (MTFR) for the manufactured treatment device (MTD) is calculated using the New Jersey Water Quality Design Storm (1.25 inches in 2 hrs.) in N.J.A.C. 7:8-5.5. The MTFR is calculated based on a verified loading rate of 0.5 gpm/sf of effective filtration treatment area for models 545 and 522, and 0.33 gpm/sq.ft. for model 530.

2. The BayFilter™ System shall be installed using the same configuration as the unit verified by NJCAT, and sized in accordance with the criteria specified in item 6 below.

3. This device cannot be used in series with another MTD or a media filter (such as a sand filter), to achieve an enhanced removal rate for total suspended solids (TSS) removal under N.J.A.C. 7:8-5.5.

4. Additional design criteria for MTDs can be found in Chapter 9.6 of the New Jersey Stormwater Best Management Practices (NJ Stormwater BMP) Manual which can be found on-line at www.njstormwater.org.

5. The maintenance plan for a site using this device shall incorporate, at a minimum, the maintenance requirements for the BayFilter™, which is attached to this document. However, it is recommended to review the maintenance website at http://www.baysaver.com/downloads/BayFilter-Technical-and-Design-Manual.pdf for any changes to the maintenance requirements.

6. Sizing Requirements:

   The example below demonstrates the sizing procedure for a BayFilter™ System.

   Example: A 0.25-acre impervious site is to be treated to 80% TSS removal using a BayFilter™ System. The impervious site runoff (Q) based on the New Jersey Water Quality Design Storm was determined to be 0.79 cfs or 354.58 gpm.

   The selection of configuration for use in the BayFilter™ System is based upon both the MTFR and the maximum inflow drainage area. It is necessary to select the configuration using both methods and to rely on the method that results in the larger configuration determined by the two methods.

   Inflow Drainage Area Evaluation:

   The drainage area to the BayFilter™ System in this example is 0.25 acres. Based upon the information in Table 1 below, the following minimum configurations are required in a

BayFilter™ System to treat the impervious area without exceeding the maximum drainage area:

1. BayFilter™ 545 EMC: Configuration 4' manhole
2. BayFilter™ 530 EMC: Configuration 4' manhole
3. BayFilter™ 522 EMC: Configuration 4' by 6' vault

Maximum Treatment Flow Rate (MTFR) Evaluation:

The site runoff (Q) was determined based on the following:

time of concentration = 10 minutes
i=3.2 in/hr. (page 5-8, Fig. 5-3 of the NJ Stormwater BMP Manual)
c=0.99 (runoff coefficient for impervious)
Q=ciA=0.99x3.2x0.25=0.79 cfs=0.79x448.83 gpm=354.58 gpm

Based on a flow rate of 354.58 gpm, the following minimum configurations are required in a BayFilter™ System to treat the impervious area without exceeding the MTFR:

1. BayFilter™ 545 EMC: Configuration 8' by 10' vault
2. BayFilter™ 530 EMC: Configuration 8' by 12' vault
3. BayFilter™ 522 EMC: Configuration 8' by 16' vault

The MTFR Evaluation results will be used since that method results in the higher minimum configuration determined by the two methods.

The sizing table corresponding to the available system models are noted below. Additional specifications regarding each model can be found in the Verification Appendix under Table A-1 and Table A-2.

Table 1 BayFilter™ Models

Configuration	MTFR[1] (gpm)			Maximum Allowable Drainage Area[2] (acres)		
	545	530	522	545	530	522
4' manhole	45	30	22.5	0.44	0.44	0.22
4' by 6' vault	90	60	45	0.87	0.87	0.44
5' manhole	135	90	67.5	1.31	1.31	0.66
6' manhole	180	120	90	1.75	1.75	0.87
6' by 6' vault	180	120	90	1.75	1.75	0.87
7' manhole	225	150	112.5	2.18	2.18	1.09
8' manhole	315	210	157.5	3.06	3.06	1.53
8' by 10' vault	450	300	225	4.37	4.37	2.18

8' by 12' vault	585	390	292.5	5.68	5.68	2.84
8' by 14' vault	675	450	337.5	6.55	6.55	3.28
8' by 16' vault	810	540	405	7.86	7.86	3.93
10' by 16' vault	945	630	472.5	9.17	9.17	4.59
10' by 20' vault	1215	810	607.5	11.79	11.79	5.90

1. Based on 0.5 gpm/sq. ft. of effective filtration treatment area for 545 and 522. 0.33 gpm/sq.ft. for 530.
2. Based on the equation in the NJDEP Filter Protocol: Maximum Inflow Drainage Area (acres) = Weight of TSS before 10% loss in MTFR (lbs.)/600 lbs. per acre of drainage area annually.

Be advised a detailed maintenance plan is mandatory for any project with a Stormwater BMP subject to the Stormwater Management Rules, N.J.A.C. 7:8. The plan must include all of the items identified in Stormwater Management Rules, N.J.A.C. 7:8-5.8. Such items include, but are not limited to, the list of indication of problems in the system, and training of maintenance personnel. Additional information can be found in Chapter 8: Maintenance and Retrofit of Stormwater Management Measures.

If you have any questions regarding the above information, please contact Shashi Nayak of my office at (609) 633-7021.

Sincerely,

James J. Murphy, Chief
Bureau of Nonpoint Pollution Control

Attachment: Maintenance Plan

cc: Chron File
Richard Magee, NJCAT
Vince Mazzei, NJDEP - DLUR
Ravi Patraju, NJDEP - BES
Gabriel Mahon, NJDEP - BNPC
Shashi Nayak, NJDEP – BNPC

BAYSAVER TECHNOLOGIES, INC.
Engineering Stormwater Solutions

BayFilter

Technical and Design Manual

www.BaySaver.com

BAYFILTER™ SYSTEM

Technical and Design Manual

© BaySaver Technologies, Inc.
1302 Rising Ridge Road, Unit One
Mount Airy, Maryland 21771
Phone 301-829-6470 • Fax 301-829-3747

Table of Contents

INTRODUCTION 1

PRINCIPLES OF OPERATION . 2

Media Filtration 2

Mechanisms of Removal 2

The BayFilter™ Cartridge 2

The Drain Down Module 4

Performance Characteristics 4

DESIGN GUIDELINES FOR THE BAYFILTER™ SYSTEM 6

BayFilter™ Treatment Train Design 6
On-line and Off-line Systems 6
Pretreatment 7
Extended Detention Systems 8

Selecting the Number of Cartridges 9
Required Data 9
Flow Capacity 10
Sediment Load Capacity 10
Water Quality Volume 12

Determining the Size of the Flow Restrictor Disk 13

Determining the Number of Drain Down Modules 14

Preparing Site Plans for the BayFilter™ System 14
Location 14
Standard Details and Notes 14

BayFilter™ System Configuration 14
Manhole BayFilter™ 15
Precast Vault BayFilter™ 16
Box Culvert BayFilter™ 17
Cast-in-place BayFilter™ 18

INSTALLATION OF THE BAYFILTER™ SYSTEM 19

Tool List 20

Trolley Installation Instructions 21

MAINTENANCE OF THE BAYFILTER™ SYSTEM 22

Maintenance Procedures 23

BAYFILTER™ SYSTEM COSTS AND AVAILABILITY 24

BAYFILTER™ DETAILED OPERATING SEQUENCE 25

SYSTEM DRAWINGS 31

PROJECT INFORMATION SHEET 53

Chapter

1

Introduction

Founded in 1997, BaySaver Technologies, Inc. is a manufacturer of stormwater treatment technologies. BayFilter™ [1] is a stormwater filtration device designed to remove fine sediments, heavy metals, and phosphorus from stormwater runoff.

BayFilter™ relies on a spiral wound media filter cartridge with approximately 43 square feet of active filtration area. The filter cartridges are housed in a concrete structure that evenly distributes the flow between cartridges. System design is offline with an external bypass that routes high intensity storms away from the system to prevent sediment resuspension. Flow through the filter cartridges is gravity driven and self-regulating, which makes the BayFilter™ system a low maintenance, high performance stormwater treatment technology.

The BayFilter™ system has been extensively tested, and has consistently shown more than 80% removal of suspended sediment from influent water. The system also demonstrated the capability to remove more than 50% of the total phosphorus influent load, including a portion of the dissolved phosphorus.

This manual provides detailed technical information on the BayFilter™ system including its capabilities and limitations. The manual describes the steps involved in designing a BayFilter™ system as well as the installation and maintenance requirements of the system.

BaySaver Technologies is a complete stormwater solutions provider. We are always willing to assist design professionals to achieve the most efficient, economical systems for their clients and projects. Please call the BaySaver Technologies Inc. Engineering Department at 1.800.229.7283 for assistance.

[1] The BayFilter™ stormwater filtration system is protected by U.S. Patent #6869528, in addition to several pending patents.

Principles of Operation

The BayFilter™ system removes contaminants from stormwater runoff via media filtration. This Technical and Design Manual describes the principles by which the BayFilter™ system works to improve the quality of the environment throughout the United States.

Media Filtration

Media filtration has long been used in drinking water and wastewater treatment processes. This technology has proven effective at removing sediments, nutrients, heavy metals, and a wide variety of organic contaminants. The target pollutants, hydraulic retention time, filter media, pretreatment, and flow rate all affect the removal efficiency of the filter.

Mechanisms of Removal

The BayFilter™ removes pollutants from water by two mechanisms: 1) interception/attachment and 2) adsorption. Interception occurs when a pollutant becomes trapped within the filter media. A sediment particle, for example, may be carried into the filter media by the water and become stuck in the interstices of the media. Such a particle will typically remain trapped within the media until the media is removed or the filter is backwashed.

Attachment occurs when pollutants bind themselves to the surface of the filter media, and this happens primarily through adsorption. Adsorption is a surface process by which dissolved ions are removed from a solution and chemically bind themselves to the surface of the media. This occurs when the surface of the filter media particle contains sites that are chemically attractive to the dissolved ions. The BayFilter™ system uses a proprietary media containing activated alumina to enhance adsorption of anions such as phosphates.

The BayFilter™ Cartridge

The main building block of the BayFilter™ stormwater filtration system is the BayFilter™ cartridge (BFC), shown in Figure 1. The BFCs are housed in a structure which may be a vault, manhole or other structure. This structure contains the inlet and outlet pipes as well as an internal manifold that delivers treated water to the outlet of the BayFilter™ system.

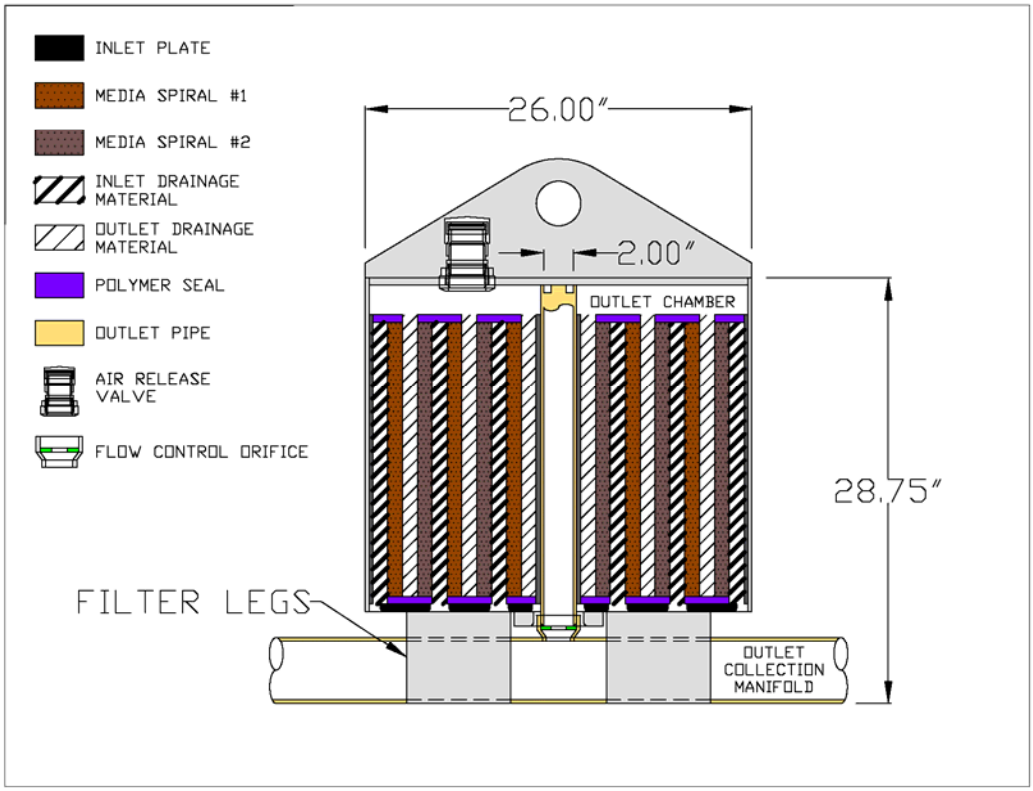

Stormwater runoff enters the manhole or concrete structure via an inlet pipe and begins to fill the structure. When the water surface elevation in the vault/manhole reaches operating level, water flows through the BFC driven by a hydrostatic head. Within the BFC, the water flows through a proprietary filter media and drains via a vertical pipe. The vertical drain is connected to the under drain system which conveys filtered water to the outfall.

During a typical storm event, the BayFilter™ system has four cycles:

1. Vault fill and air release;

2. Uniform bed load hydrodynamic filtration;

3. Uniform bed load siphon filtration; and

4. Siphon break and hydrodynamic backwash.

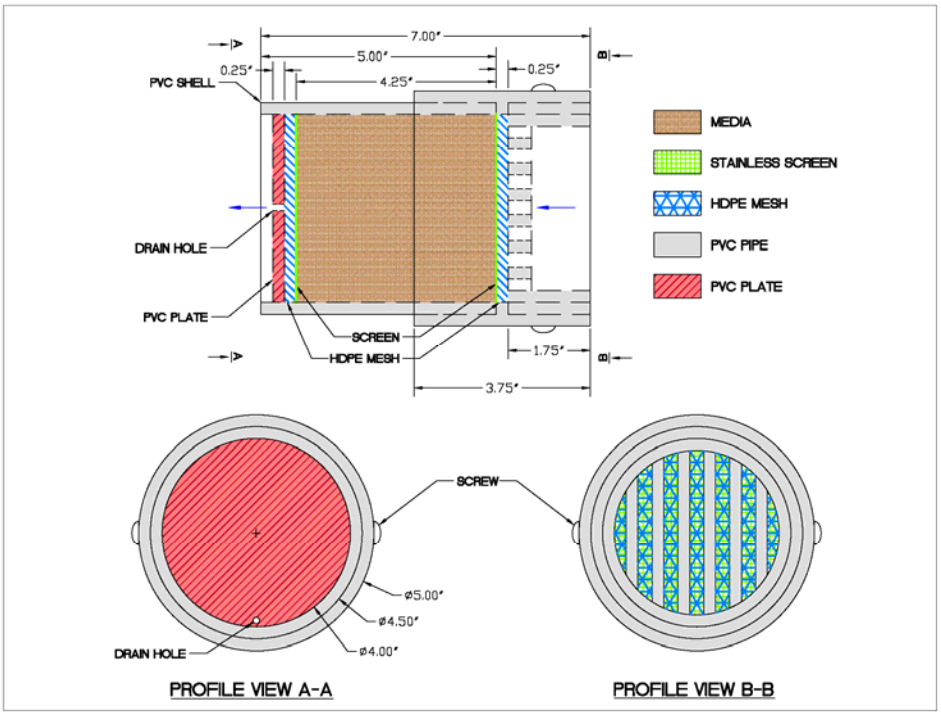

Figure 2: Drain Down Module

A detailed depiction of the BFC operating sequence is given in Appendix A.

The Drain Down Module

Each BayFilter™ Stormwater Treatment System will include a number of standard BFCs and at least one drain down module per BFC. The drain down module which has a flow capacity of 0.5 gpm, will allow the manhole/vault to empty after the siphon has broken and the standard BFCs are no longer operating. The drain down module prevents the system from retaining standing water between storm events, thereby reducing the chance of mosquitoes or other disease vectors breeding within the system and preventing the system from becoming anaerobic during dry periods. This cartridge also uses the same media as the BFC and has a removal efficiency in excess of 90 percent.

Performance Characteristics

The BayFilter™ has been extensively tested in the laboratory. This testing has been carried out using SIL-CO-SIL 106 as a sediment source. SIL-CO-SIL

106 is a silica product containing approximately 90% fine sediments (d_{50} = 23 microns), and is widely accepted as a sediment source for stormwater simulations by regulatory agencies such as the Washington State Department of Ecology (TAPE) program, New Jersey Department of Environmental Protection (TARP), as well as other leading agencies.

The BFC needs only 28" of depth of water to begin full flow operation. Once the full flow operation has been achieved, the BFC will operate to a depth of 6" at which time the siphon will break and the system will backwash. At this point the only flow is from the drain down cartridge which will drain the vault to a depth below 1".

Each BFC has a maximum nominal flow of 30 gpm. At this flow, each cartridge can treat 150 lbs of the total sediment load before maintenance. In addition, through the use of different size flow control orifice(s), the BFC flow is regulated. As the flow is lowered, the treated sediment load increases. For example, when the flow is lowered to 15 gpm, the cartridge is able to treat 300 lbs of the total sediment load before maintenance.

Chapter

2

Design Guidelines for the BayFilter™ System

Designing a BayFilter™ system is done in four phases: (1) determine the treatment train design; (2) locate the system on the site and incorporate it into the plans; (3) determine the number of cartridges, size of the flow restrictor disks and number of drain down modules necessary; and (4) select a system configuration. It is important to realize that the design process can be iterative until the desired design parameters are satisfied. Again, it is important to note that the BayFilter™ systems are designed offline. This section details the design process and provides examples for each of the three steps. During the design process, the engineer must consider factors in addition to regulatory requirements. These include:

- Site specific constraints
- Proposed system location
- System configuration (flow through or extended detention
- Pretreatment
- Efficiency requirements
- Pollutant loading (sediment load)
- Treatment flow rates and hydraulics
- Maintenance intervals

BayFilter™ Treatment Train Design

On-line and Off-line Systems

BayFilter™ systems are usually designed to treat moderate to low flow rates. In the vast majority of applications, the peak design flow through the storm

drain system will be significantly greater than the treatment design flow through BayFilter™. Because of this difference, a bypass structure is required for most BayFilter™ installations. Therefore, BayFilter™ systems are installed offline, utilizing an external bypass to route high flows around the system.

A schematic of an offline BayFilter™ system is shown in Figure 3 below. The bypass structure diverts low flows to the BayFilter™ system and allows high flows to pass to a separate outfall. The bypass structure will feature flow controls designed by an engineer to ensure that the required treatment flows are sent to the BayFilter™. The two effluent streams (the treated effluent from the BayFilter™ and the high intensity bypass) may be combined into a single stream or discharged to separate outfalls. These configurations typically involve higher flow per cartridge, but reduced treated sediment load per cartridge. These configurations are, however, usually limited more by flow sediment capacity.

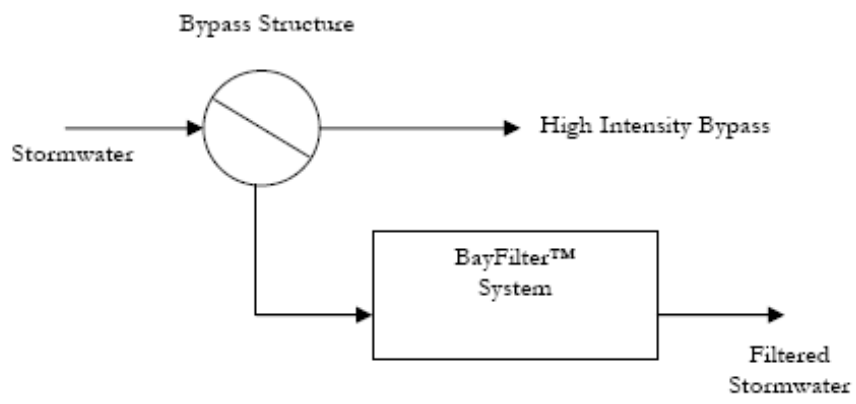

Figure 3: Offline BaySaver Technologies, Inc. System

In BayFilter™ installations sediment will accumulate in the vault as well as in the filter cartridges. In offline installations high intensity flows are routed away from the vault minimizing the risk of resuspending this accumulated sediment. In online applications it is possible for high flows to mobilize and release this sediment.

Pretreatment

The BayFilter™ system is designed to remove a minimum of 80% of suspended sediments and 50% of the total phosphorus load. If the anticipated sediment load is particularly heavy or if there will be a significant oil load, the system may require pretreatment.

Pretreatment may also be required by local regulations. Pretreatment systems will remove a portion of the influent pollutant load. BaySaver

Technologies, Inc. BaySeparator™ system is an ideal hydrodynamic separator that removes sediments and floatables from stormwater runoff.

Figure 4 shows a schematic of a typical BayFilter™ installation with pretreatment. Note that the pretreatment structure is downstream from the bypass. The system will work as long as 28" of head is achieved to activate the cartridge flow and will continue to work until it reaches the siphon break level (6"). Consult BaySaver Technologies, Inc. Engineering Department for verification based on your particular site conditions.

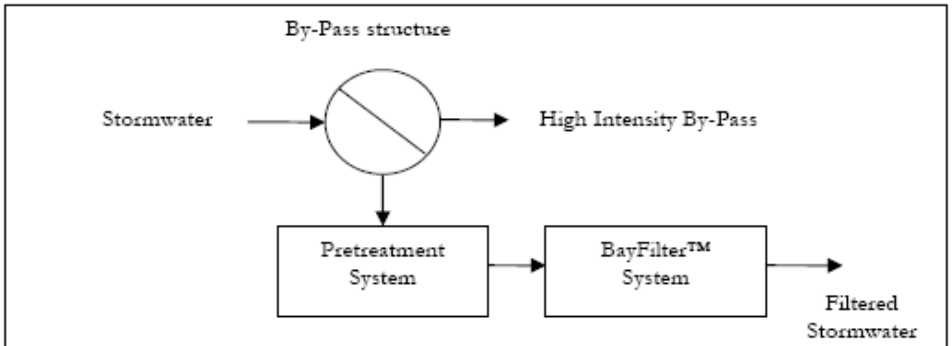

Figure 4: Off line BayFilter™ System with Pretreatment

Extended Detention Systems

In some applications, BayFilter™ systems will be installed in conjunction with extended detention systems. Extended detention systems attenuate peak flow rates within the storm drain system. In these cases, the BayFilter™ is placed downstream from an extended detention system, as shown in Figure 5.

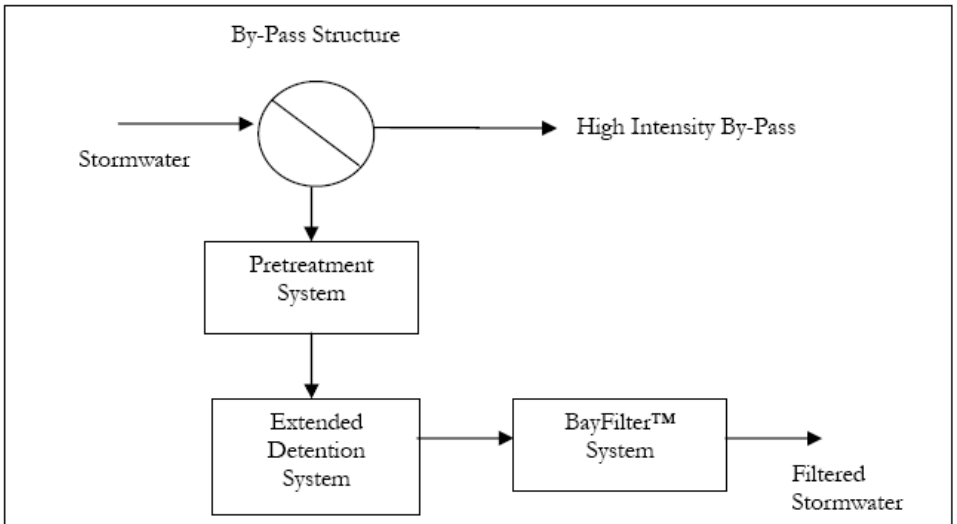

Figure 5: Offline BayFilter™ System with Extended Detentions

Systems with smaller drops can be designed as well. The system will work as long as 28" of head is achieved to activate the cartridge flow and will continue to work until it reaches the siphon break level (6"). Consult BaySaver Technologies, Inc. Engineering Department for verification based on your particular site conditions.

Selecting the Number of Cartridges

Each BayFilter™ system relies on a collection of individual cartridges to achieve the desired removal efficiency and it is important to correctly determine the number of filter cartridges required. Too few cartridges will result in a system that does not meet the performance specifications while too many cartridges will result in a system larger than necessary for the site.

To accurately determine the number of cartridges required for a BayFilter™ installation, three factors must be considered:

- **The flow capacity of the system**
- **Treated sediment load of the system**
- **Jurisdiction – specific sizing requirements (water quality volume)**

Each of the above factors when evaluated will determine a minimum of cartridges required to address that design parameter. Calculations for all three factors need to be done to determine which design parameter is the limiting factor. In each case it will be the computation that results in the highest minimum number of cartridges, the one that will determine the cartridge count. In other words, whichever item requires the most cartridges to meet any one particular design parameter will determine the minimum number of cartridges required for the system.

Required Data

To ensure that the correct number of cartridges is specified for the BayFilter™ system, the designer must be aware of the local regulatory requirements for stormwater treatment. Depending on the jurisdiction in which the project site is located, the engineer may have to meet minimum treatment flow rates, treatment volumes or some other criteria such as filter bed area. Some jurisdictions specify a methodology for calculating a minimum treatment flow rate for a given site. Other jurisdictions may require extended detention upstream from the filtration system or have volume-based rather than flow-based requirements.

Flow Capacity

At many sites regulatory requirements will specify a minimum treatment flow rate (Q_{TRT}) that must be passed through the stormwater treatment system. These regulatory requirements may also specify pretreatment or extended detention practices that need to be included in the site design. Some jurisdictions specify that the stormwater filtration systems be designed on the basis of filter area following prescribed methodologies.

In most cases pretreatment can be provided by a hydrodynamic separator like the BaySaver Technologies, Inc. BaySeparator™ system. Regardless of the pretreatment design, the minimum number of BayFilter™ cartridges can be determined by dividing the treatment flow rate by 30 gpm (0.067 cfs) and rounding up to the next whole number using Equation 1. This calculation provides the minimum number of BFCs that will be necessary to fully treat the water quality flow from the site. This computation does not take into account the sediment load portion of the design, which needs to be performed as well. The design flow per cartridge will ultimately be determined by the cartridge sediment load (Table 1). The step-by-step procedure is shown below.

1. Determine the required treatment flow rate (Q_{TRT}) based on locally approved methodologies for the project site. This may involve the use of the Rational Method, TR-55 or another locally specified hydrologic model. If a locally approved methodology is not specified, BaySaver Technologies, Inc. recommends using one of these commonly accepted models.

2. Using the treatment flow rate, calculate the minimum numbers of BayFilter™ cartridges required to treat that flow using Equation 1.

$$\#Cartridges = \frac{Q_{TRT}(cfs) * 448.8 \frac{gpm}{cfs}}{Q_{BFC}}$$

Equation 1

The minimum number of BFCs is equal to the maximum treatment flow rate divided by Q_{BFC}, rounded up to the next whole number. In most cases, Q_{BFC} will be 30 gpm (0.067 cfs) per cartridge.

Sediment Load Capacity

Once the minimum number of BFCs required to treat the flow is known, the engineer must ensure that the number of BFCs specified will be capable of handling the sediment load from the site. BayFilter™ systems are typically designed around a maintenance cycle. It is important to note that the number of BFCs required to treat the anticipated total system sediment load is a minimum

number. For any site, it is necessary to calculate the minimum number of BFCs required to treat both the peak flow rate and the total system sediment load (as discussed in this section). The number of BFCs required for the site is the greater of the calculated numbers.

To ensure that the BayFilter™ will function acceptably with annual maintenance, it is necessary to calculate the incoming annual sediment load from the site.

1. Calculate the annual treated runoff volume according to Equation 2. In Equation 3, V_{TRT} is the annual treated runoff volume, P is the

$$V_{TRT}\left(ft^3\right) = P * A * c * \frac{1ft}{12in} * \frac{43560\,ft^2}{acre} * \%\,Capture$$

Equation 2

average annual precipitation (in inches), A is the area of the site (in acres), c is the runoff coefficient of the site (c is dimensionless), and % Capture is the fraction of the total runoff that is treated by the stormwater quality system. If % Capture is not otherwise specified, a default value of 0.90 can be used.

2. Using the annual treated runoff volume, calculate the anticipated total system sediment load to BayFilter™ according to Equation 3. In Equation 3, L is the mass of sediment that BayFilter™ is exposed to annually (in pounds), V_{TRT} is the annual treated runoff volume as calculated in step 1 (in ft^3), and TSS_{IN} is the influent concentration of TSS in the runoff (in mg/L). The influent TSS concentration (TSS_{IN})

$$L = V_{TRT} * TSS_{IN} * \frac{28.3L}{ft^3} * \frac{kg}{10^6\,mg} * \frac{2.2lbs}{kg}$$

Equation 3

depends greatly on the site and the surrounding land use. In the absence of readily available data, BaySaver Technologies, Inc. recommends using a minimum event mean concentration (EMC) TSS value of 60 mg/l. The impact of the on the filter cartridge will also be less if the filtration system is preceded by pretreatment. In these cases, the influent TSS to the BayFilter™ system need to be reduced to reflect pretreatment sediment removal. The BaySaver Technologies' Engineering Department can assist with these calculations.

3. Once the total annual system sediment load (L) is calculated, the engineer must ensure that the number of cartridges specified will be able to remove that sediment load at the specified design flow rate. Divide the total system sediment load L by the capacity of each BFC and note the associated BFC flow rate. Round up to the next whole number to get the minimum number of BFCs required to treat this sediment load at the required flow rate per BFC.

Water Quality Volume

In some cases the BayFilter™ system will have to be placed downstream from an extended detention facility or local regulations will specify a treatment volume rather than a treatment flow rate. In these cases the minimum number of BFCs may not be determined using the treatment flow rate calculation. Instead, the minimum number of cartridges for this system depends on the controlled discharge rate Q_{TRT} from the upstream detention facility or the filtration system.

1. Determine the WQv for the site. This may vary significantly from one jurisdiction to the next based on local regulations. Maryland for instance requires that new developments treat the first one inch of water coming off of the site.

2. Most jurisdictions will also specify a drain down time for the detention system. This is usually in the 24 to 40 hour range. It is recommended that the maximum drain down time not exceed 40 hours, beyond which the detained water could potentially become anoxic. BayFilter systems should instead be designed with an initial drain down time of less than 40 hours. Then, as the filter cartridges become occluded, the drain down time will gradually increase to 40 hours. Once it takes in excess of 40 hours for the detention system to fully drain out then the BayFilter system should be maintained.

3. Once you have determined the WQv and the drain down time, the quantity of BayFilter cartridges can be determined by dividing the WQv by the drain down time and then dividing the resulting number by the treatment flow rate of a BayFilter cartridge. For volume based BayFilter systems, the treatment flow rate of each cartridge should be limited to 15 gpm. For example if:

   WQv = 10,000cf

   Drain down time = 24hrs (1440min)

   BFC flow rate = 15gpm

   Number of BFC's = ((10,000cf/86,400)*448.83)/15gpm

   Number of BFC's = 4

Determine the Size of the Flow Restrictor Disk:

The BayFilter cartridges have a flow restrictor disk that controls the initial filtration rate of the cartridge until the media within the cartridge becomes partially filled with solids; at which time the media becomes the flow restriction and the flow restrictor disk is rendered moot. The flow restrictor is initially sized to restrict the WQv release to 24 hours. Over time as the filters become partially restricted this will exceed the 24 hours. When the BayFilter Cartridges no longer release the WQv within 40 hours, the cartridges must be maintained.

1. Continuing from our previous example, if the desired drain down time is 24 hours and the site requires 4 BayFilter Cartridges, then the actual per cartridge flow rate is calculated by:

   Per Cartridge Flow Rate (gpm) = ((WQv/86,400) * 448.83)/# of BFC's

   Per Cartridge Flow Rate (gpm) = (10,000cf/86400) * 448.83/4

   Per Cartridge Flow Rate (gpm) = 13gpm

2. From this, the orifice size can be determined based on the chart below:

BFC Cartridge Flow in (GPM)

Head	***Orifice Diameter (Inches)***							
(ft)	***1.32"***	***1.24"***	***1.14"***	***0.80"***	***0.75"***	***0.70"***	***0.60"***	***0.50"***
5				13.5	11.6	9.9	6.6	4.4
4.8				12.9	11.1	9.4	6.4	4.3
4.6			30.3	12.4	10.7	9.0	6.2	4.2
4.4			29.6	12.1	10.4	8.7	6.1	4.1
4.2			29.2	11.5	9.9	8.3	5.9	4.0
4.0			26.1	10.8	9.4	8.1	5.8	3.9
3.8			22.8	10.2	8.8	7.4	5.6	3.8
3.5			19.4	9.7	8.3	7.1	5.5	3.7
3.3			18.4	9.3	8.0	6.7	5.3	3.6
3.1		30.4	17.7	8.8	7.6	6.4	5.1	3.5
3.0		24.3	15.7	8.3	7.1	6.0	5.0	3.3
2.7		22.4	14.0	8.0	6.9	5.8	4.8	3.2
2.5*	30.5	20.5	12.4	7.7	6.7	5.6	4.6	3.1

*** Note when the head is below 2.5 it continues to function at the equivalent head of 2.5 because the system goes into siphon.**

Determining the Number of Drain Down Modules (DDM's):

The number of drain down modules is almost always equal to the number of BayFilter cartridges. Their purpose is to remove any excess standing water from the BayFilter vault once the siphon has broken. Therefore, in rare instances it may be beneficial to add additional drain down modules to a system if very high influent sediment loads are expected.

Preparing Site Plans for the BayFilter™ System

Once the BayFilter™ system has been selected, the chosen system must be included on the site plans.

Location

The location of BayFilter™ on the site will be determined by several factors; maintenance access, the unit's footprint, available drop, available depth, and the surface elevation of the receiving waters must all be considered when selecting the system's location. The location and configuration must be in compliance with MCDPS's underground SWM Structure regulations

The BayFilter™ system must be installed in an area that is accessible to maintenance equipment. The maintenance of a BayFilter™ system requires a vacuum truck as well as the removal and replacement of the filter cartridges. The manhole covers, and or Access Hatches of the BayFilter™ must be placed in locations that can be easily reached by such a vehicle.

The BayFilter™ should be placed in a location that minimizes its interference with other existing or planned underground utilities.

Standard Details and Notes

All of the standard details and notes for the plans are available in AutoCAD and .pdf format from BaySaver Technologies, Inc. They are also be available on the Website at www.BaySaver.com

BayFilter System Configuration

There are four (4) types of BayFilter systems:

1.) Manhole: Standard precast manholes with O-Ring gasket joints

2.) Precast vault: Monolithically poured concrete vault (base and walls)

3.) Box culvert vault: Must be made by MCDPS approved supplier

4.) Cast in place vault: Custom designed for site.

Manhole BayFilter™

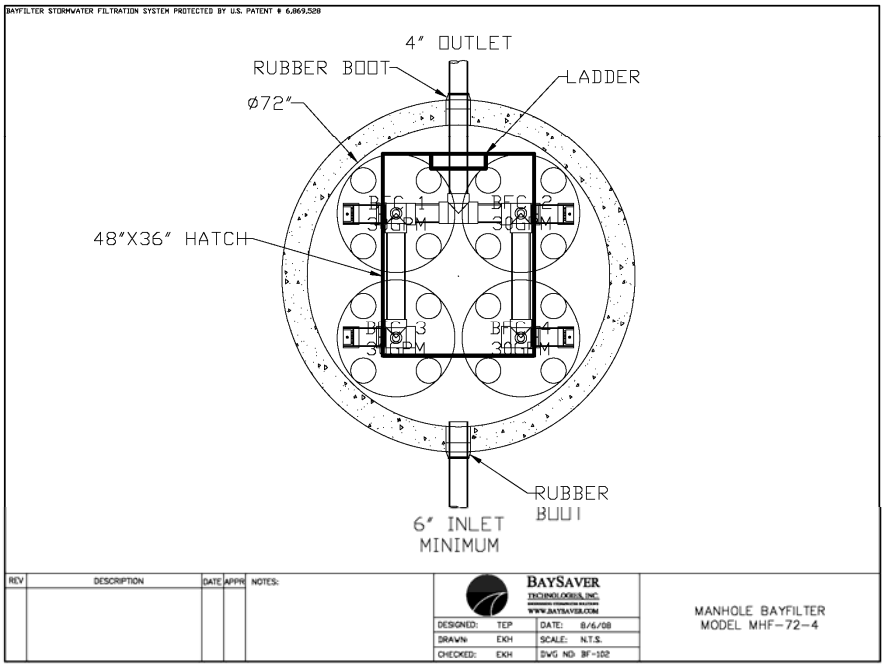

Manhole BayFilter™ systems have a small footprint, and can be fit into site plans easily without interfering with other underground utilities. Manhole BayFilter™ systems are ideal for applications downstream from water quality detention structures. Please consult with the BaySaver Technologies, Inc. Engineering Department for more details.

Access to the Manhole BayFilter™ for inspection or maintenance is achieved through a minimum 30" diameter frame and cover. In each Manhole BayFilter™ system, the BFCs are arranged so that a maintenance worker can stand on the floor of the manhole while installing or removing the cartridges. Please refer to Appendix C for engineering drawings showing the available Manhole BayFilter™ configurations.

Available manhole filter systems include:

BayFilter™ Model	Manhole Size	Maximum Number of BFCs	Maximum Treatment Flow gpm (cfs)
MHF-60-3	60”	3	90 (0.20)
MHF-72-4	72”	4	120 (0.27)
MHF-84-5	84”	5	150 (0.33)
MHF-96-7	96”	7	210 (0.47)

Precast Vault BayFilter™

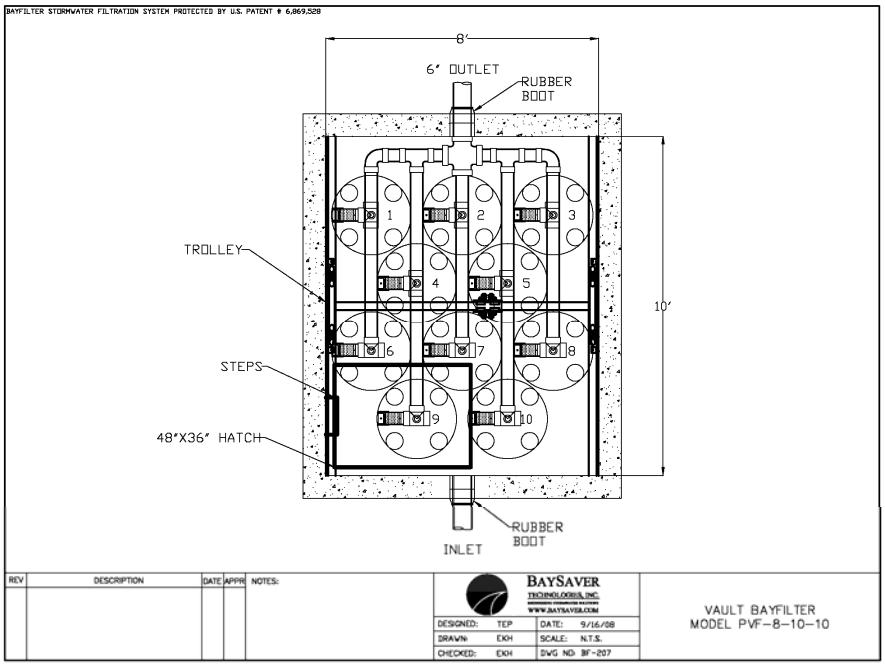

When more BFCs are required, Precast Vault BayFilter™ systems may be used on larger sites or sites with more impervious area. The Precast Vault BayFilter™ system is larger than the Manhole BayFilter™. Constructed within a precast concrete vault, it has a treatment capacity ranging from 240 gpm (0.53 cfs) in an 8’ x 10’ vault to 2,010 gpm (4.48 cfs) in a 10’ x 48’ vault. Should precast vaults of the dimensions outlined not be available locally, these structures can be cast in place. The table below shows the available Precast Vault BayFilter™ systems, along with the maximum number of filter cartridges and treatment capacities. The minimum system drop is typically 28” however this can be

reduced on a site specific basis by BaySaver Technologies, Inc. in conjunction with an engineer.

The figure above shows the layout of a PVF-8-10-10, an 8' x 10' precast vault BayFilter™ system. The system comprises ten standard BFCs and 10 drain down modules. Unlike the manhole BayFilter™, the outlet manifold in the precast vault BayFilter™ does not connect directly to the outlet pipe. Instead, each of the under drain lines enters an outlet manifold which drains to the outlet pipe.

Box Culvert BayFilter™

Like the manhole BayFilter™, access to the box culvert BayFilter™ is provided through the hinged access hatch. The box culvert BayFilter™ is constructed in 10' x 6' sections. Each vault has at least one access hatch. The BFCs and outlet manifolds are arranged to allow maintenance personnel to stand on the concrete floor while working inside the structure. The BayFilter™ cartridges and under drain manifold components are supplied by BaySaver Technologies, Inc. together with the precast vaults. Please refer to Appendix C for a complete set of box culvert BayFilter™ configurations.

Available precast vault and box culvert filter systems include:

BayFilter™ Model	Vault Size (ft x ft)	Maximum Number of BFCs	Maximum Treatment Flow gpm (cfs)
PVF-8-10-10	8' x 10'	10	300 (0.67)
PVF-8-12-13	8' x 12'	13	390 (0.87)
PVF-8-14-15	8' x 14'	15	450 (1.00)
PVF-8-16-18	8' x 16'	18	540 (1.20)
PVF-10-16-21	10’ x 16'	21	630 (1.40)
PVF-10-20-27	10 x 20'	27	810 (1.80)
PVF-10-26-33	10' x 26'	33	990 (2.21)
PVF-10-32-42	10' x 32'	42	1,260 (2.81)
PVF-10-38-51	10' x 38'	51	1,530 (3.41)
PVF-10-40-54	10' x 40'	54	1,620 (3.61)

PVF-10-44-60	10' x 40'	60	1,800 (4.01)
PVF-10-48-66	10' x 48'	66	1,980 (4.41)

Cast-in-place BayFilter™

For sites requiring more than 66 BFCs or for projects on which a large precast vault or box culvert BayFilter™ is not feasible, BaySaver Technologies, Inc. can supply custom-designed BayFilter™ systems. These custom systems utilize a cast in place vault or other system, and can be designed around specific site constraints. High flow rates, shallow installations, very flat sites, limited footprints, and other design considerations can be addressed with a cast in place system. For more information on custom BayFilter™ designs, please contact BaySaver Technologies, Inc. directly.

Chapter

3

Installation of the BayFilter™ System

BayFilter™ systems are installed along with the storm drain. Installation procedures vary depending on the configuration of the BayFilter™ system. Installation instructions for manhole BayFilter™ systems and precast vault BayFilter™ systems are contained in this section.

Custom BayFilter™ systems may have particular installation issues that will be addressed during the design. Installation instruction for a custom BayFilter™ will be included with the custom design documents.

Installation of a BayFilter™ System

1. Contact utility locator to mark any nearby underground utilities and make sure it is safe to excavate.

2. Reference the site plan and stake out the location of the BayFilter™ manhole/vault.

3. Excavate the hole, providing any sheeting and shoring necessary to comply with all federal, state and local safety regulations.

4. Level the subgrade to the proper elevation. Verify the elevation against the manhole/vault dimensions, the invert elevations, and the site plans. Adjust the base aggregate, if necessary.

5. Have the soil bearing capacity verified by a licensed engineer for the required load bearing capacity. On solid subgrade, set the first section of the BayFilter™ manhole/vault.

6. Check the level and elevation of the first section to ensure it is correct before adding any riser sections.

7. If additional section(s) are required, add a watertight seal to the first section of the BayFilter™ manhole/vault. Set additional section(s) of the manhole/vault, adding a watertight seal to each joint.

8. Install the trolley system (if applicable). See separate instruction sheet.

9. Install the PVC outlet manifold. Glue all PVC joints with the exception of the BayFilter cartridge coupling.

10. Install the PVC outlet pipe in BayFilter™ manhole/vault.

11. Install the inlet pipe to the BayFilter™ manhole/vault.

12. Install BayFilter Drain Down Modules (DDM) with red mark aligned to the top of the manifold system.

13. After the site is stabilized, remove any accumulated sediment or debris from the vault and install the flow disks and the BayFilter™ cartridges.

Tool List:

- PVC glue and primer
- Crane / lifting mechanism to lower cartridges in to the vault (each cartridge weighs 350 lb)
- Screwdriver or nut driver for Fernco couplers

- Soft blow hammer
- Saw (in case PVC manifold length needs to be adjusted)

Trolley Installation Instructions

1. Attach the mounting brackets to the track.

2. Mark a horizontal line 6" down from the ceiling of the vault structure on the two long walls.

3. Each track is split in sections. The length and number of sections vary depending on the vault. It is generally better to start installing longer track sections first. Hold a section in place and align the top of the brackets with the horizontal line on the wall. Mark the center of the hole in each bracket and remove the track.

4. Using a hammer drill and ¼" bit, drill a hole approximately 3" deep at each mark.

5. Hold the track back in place and realign the brackets with the holes. Place a plastic spacer block behind each bracket and using the supplied ¼" x 3¼" anchor bolts mount the track in place. Only install one section of track at this stage.

6. Repeat this procedure on the opposite wall of the vault directly across from the first section.

7. Bolt the 4 trolleys to the aluminum I-beam as shown in the attached diagram. Make sure that the wheels for each trolley are mounted an equal distance from the top of the I-beam.

8. Lift the I-beam in to place and insert the trolleys in to the track.

9. Using the supplied couplers, install the second sections of track via the same procedure. Continue until the track runs the length of the vault or as designed.

Chapter

4

Maintenance of the BayFilter™ System

The BayFilter™ system requires periodic maintenance to continue operating at the design efficiency. The maintenance process comprises the removal and replacement of each BayFilter™ cartridge and drain down module and the cleaning of the vault or manhole with a vacuum truck. BayFilter™ maintenance should be performed by a BaySaver Technologies, Inc. certified maintenance contractor.

The maintenance cycle of the BayFilter™ system will be driven mostly by the actual solids load on the filter. The system should be periodically monitored to be certain it is operating correctly. Since stormwater solids loads can be variable, it is possible that the maintenance cycle could be more or less than the projected duration.

The BayFilter systems in New Development applications are designed to treat the WQv in 24 hours initially. Later in the cycle these cartridges will flow at a slower rate, and when the WQv does not drain down within +/- 40 hours after the storm event, the system must be maintained.

When a BayFilter™ system is first installed, it is recommended that it be inspected every six (6) months. When the filter system exhibits flows below design levels the system should be maintained. Filter cartridge replacement should also be considered when sediment levels are at or above the level of the 4 inch manifold system. Please contact the BaySaver Technologies Inc. Engineering Department for maintenance cycle estimations or assistance at 1.800.229.7283.

Maintenance Procedures

1. Remove the manhole covers and open all access hatches.

2. Before entering the system make sure the air is safe per OSHA Standards or use a breathing apparatus. Use low O_2, high CO, or other applicable warning devices per regulatory requirements.

3. Using a vacuum truck remove any liquid and sediments that can be removed prior to entry.

4. Using a small lift or the boom of the vacuum truck, remove the used cartridges by lifting them out.

5. Any cartridges that cannot be readily lifted directly out of the vault should be removed from their location and carried to the lifting point using the Trolley system installed in the Vault (if applicable).

6. When all cartridges and drain down modules are removed, remove the balance of the solids and water; then loosen the stainless clamps on the Fernco couplings in the pipe manifold; remove the drain pipes as well. Carefully cap the manifold and the Fernco's and rinse the floor removing the balance of the collected solids.

7. Clean the manifold pipes, inspect, and reinstall.

8. Install the exchange cartridges and close all covers.

9. The used cartridges must be sent back to BaySaver Technologies, Inc. for exchange/recycling and credit on undamaged units.

Chapter

5

BayFilter™ System Costs and Availability

BayFilter™ systems are available throughout the United States from ADS. Material, installation, and maintenance costs can vary significantly with location. For BayFilter™ pricing in your area, please contact ADS at 1-800-821-6710.

BayFilter™ cartridges and outlet components can be shipped anywhere in the continental United States. Manholes and precast vaults are also supplied by BaySaver Technologies, Inc. as part of a complete stormwater filtration system.

Appendix

A

BayFilter™ Detailed Operating Sequence

The cycle operation of a BayFilter™ is as follows:

A. Vault Fill and Air Release: Water enters the system through an inlet pipe which fills the BayFilter™ vault. As the vault fills, water enters the cartridge through the inlet plate on the bottom.

As the water level rises in the vault, air from inside the BFC is exhausted via an air release valve. This operation is critical for the proper functioning of the siphon, which drives the BayFilter™ during periods of low water level in the vault. (Refer to Figure A-1 for details on this operation).

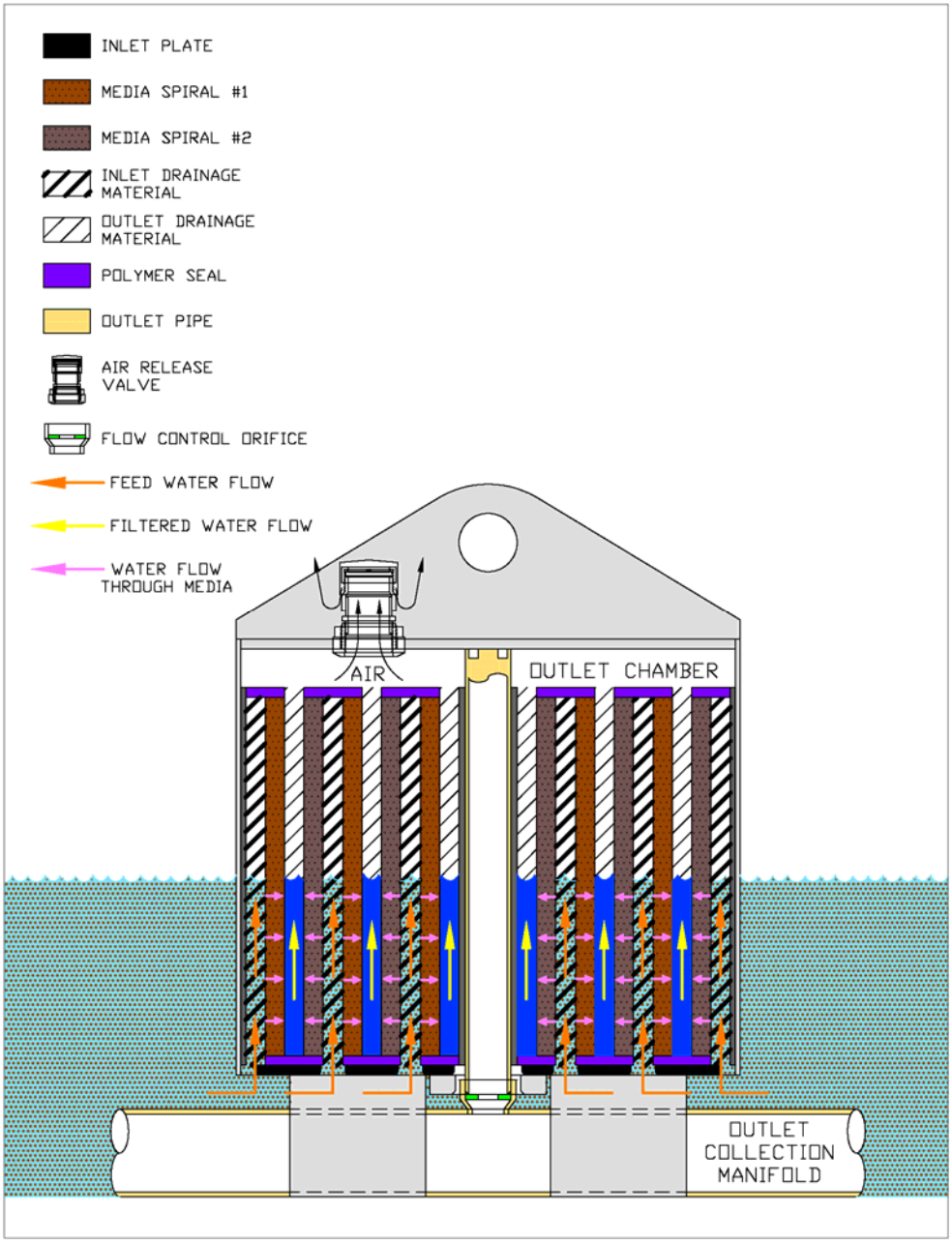

Figure A-1: Vault filling operation and release

B. Filtration: As water enters the continuous inlet drainage spiral, air is exhausted. Water then flows horizontally through the engineered media. Next it flows to the outlet drainage spiral which is also one continuous piece material. Filtered water then flows vertically to the outlet chamber located at the top of the filter media inside of the cartridge. Finally, filtered water flows in to the center outlet drain and leaves the system via the outlet manifold below the inlet plate. (Figure A-2)

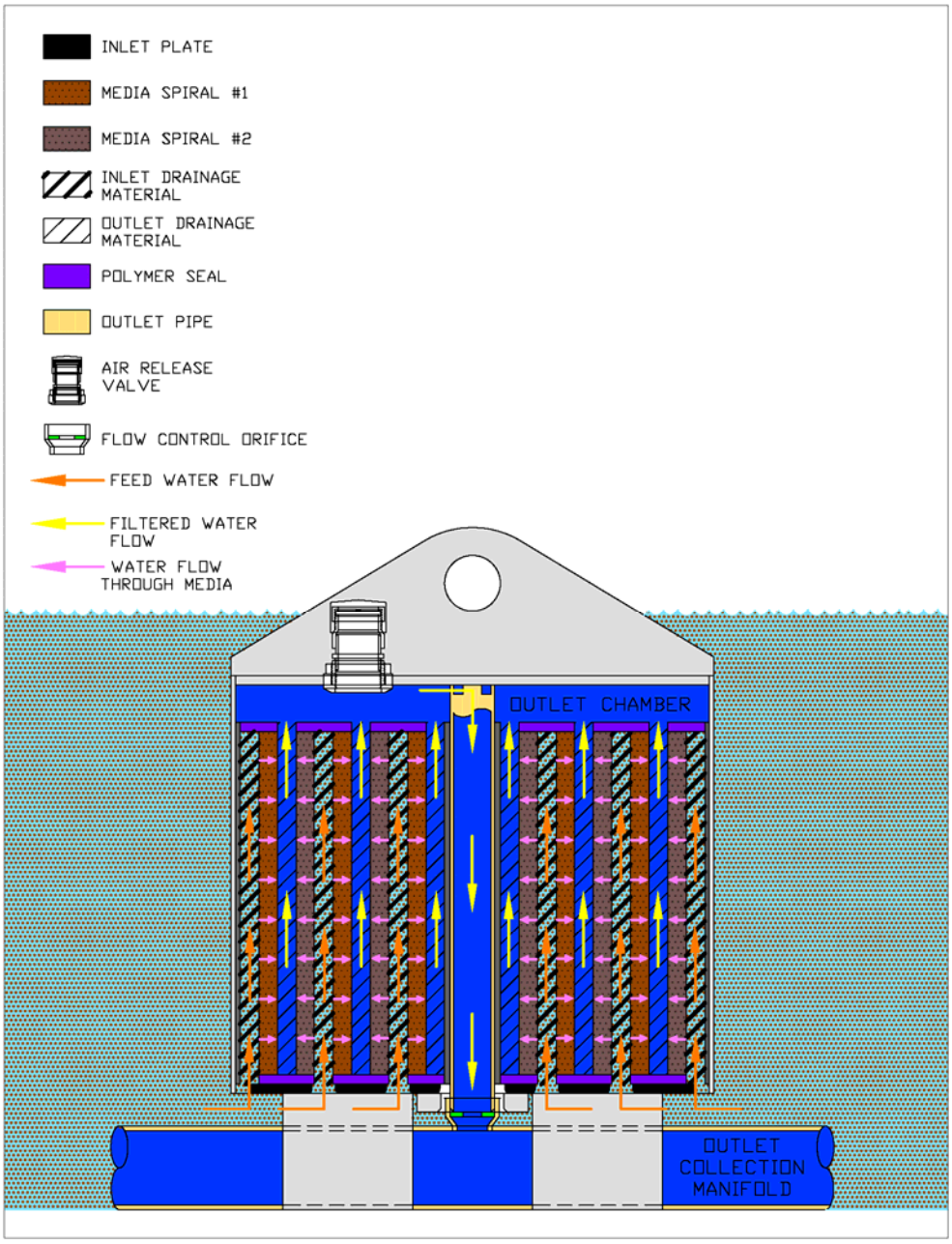

Figure A-2: Normal filter operation

C. Siphon Filtration: After the water level in the vault falls below the top of the filter cartridge, a siphon is established and water will continue to flow (Figure A-3) until the siphon is broken. During siphon the water level in the vault will decrease until it reaches the base of the BFC; air then enters the filter cartridge and breaks the siphon. This cause's filtration flow to stop and hydrodynamic backwash begins.

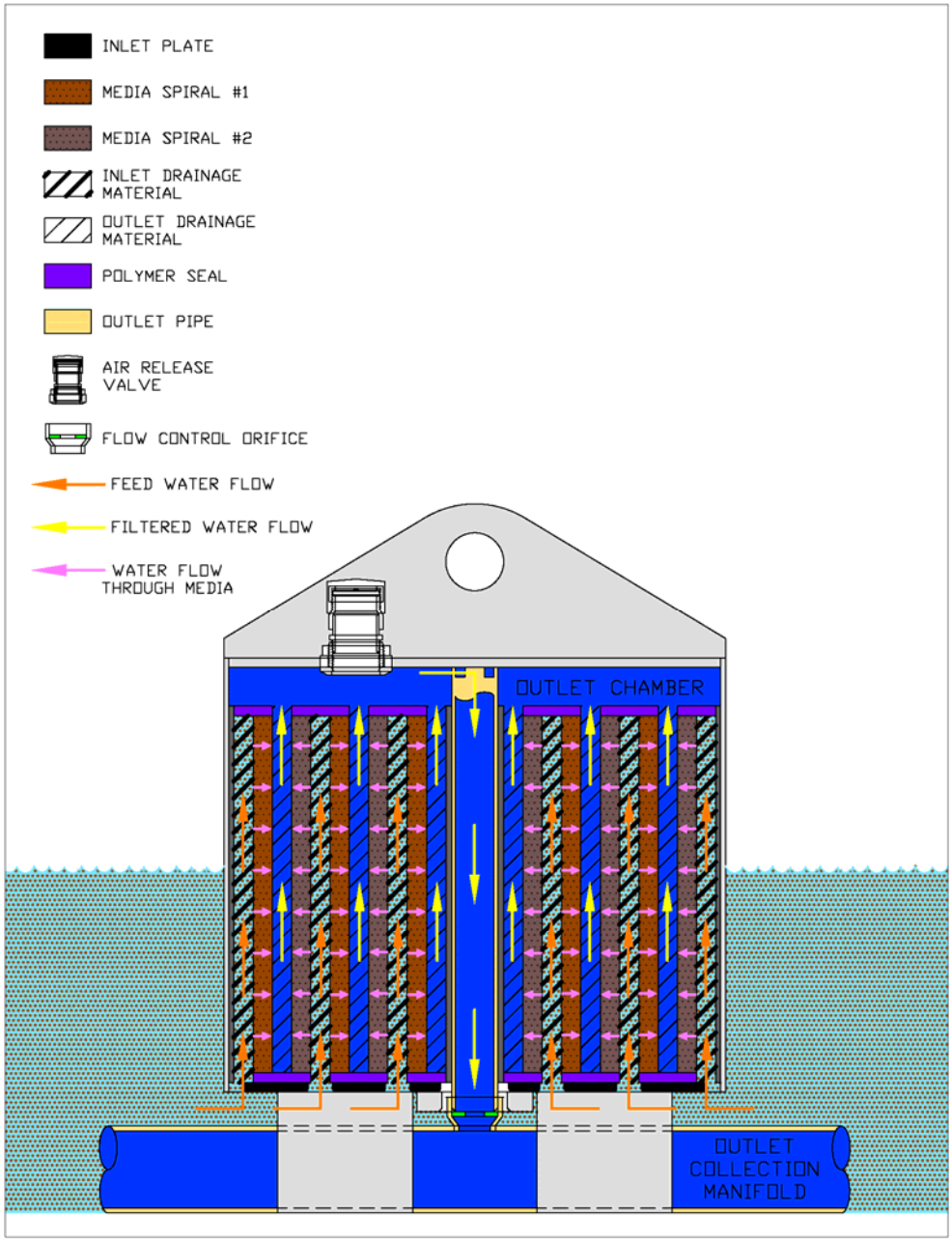

Figure A-3: Siphon filtration

D. When air enters the filter, the siphon breaks (Figure A-4), and a gravity-driven backwash occurs with all of the water flowing from the outlet chamber backwards through the filter media (Figure A-5). This backwash has the effect of dislodging particles captured in the filtration layers and re-establishing porosity. Dislodged particles are transported back in to the filter vault and accumulate on the filter vault floor.

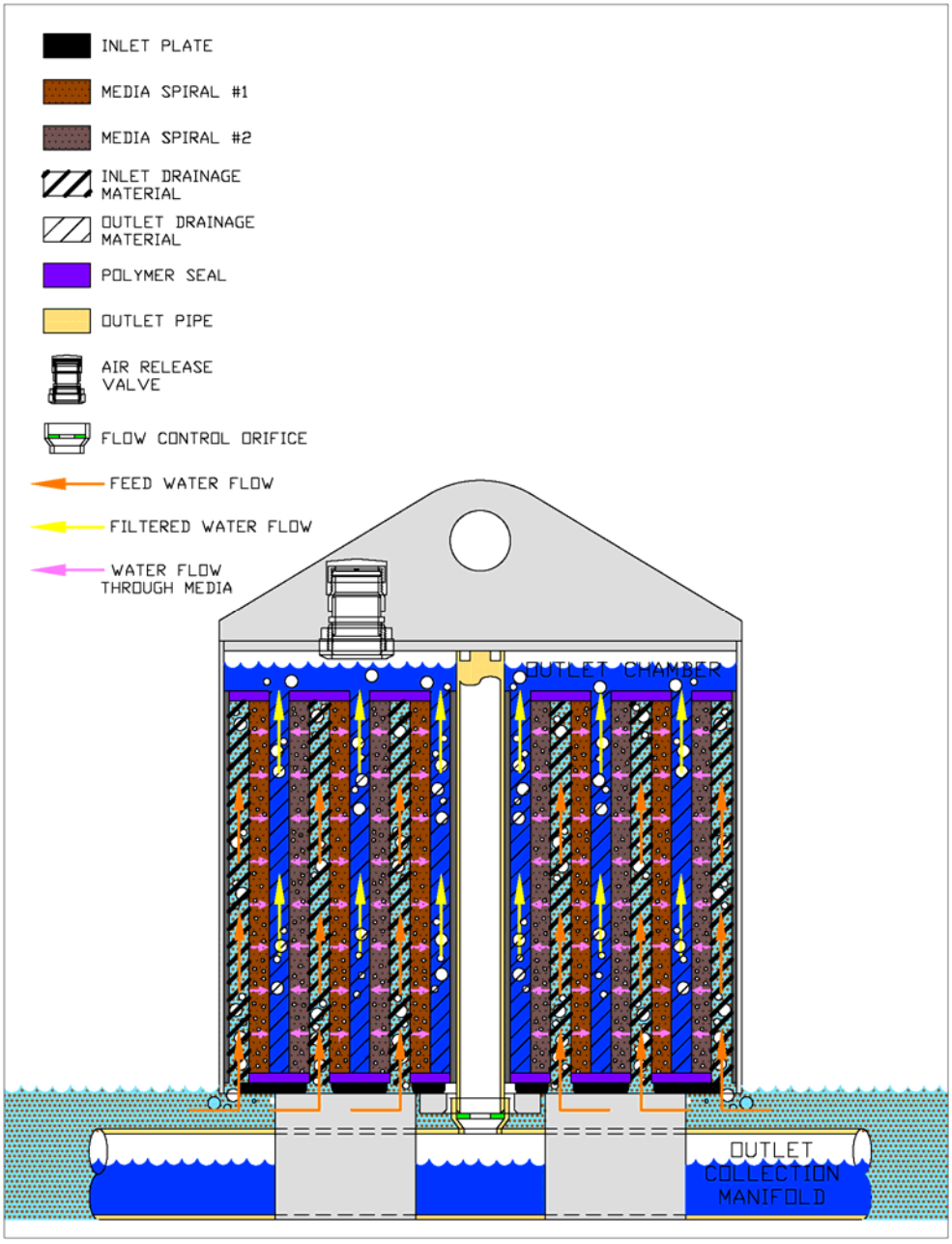

Figure A-4: Siphon Break

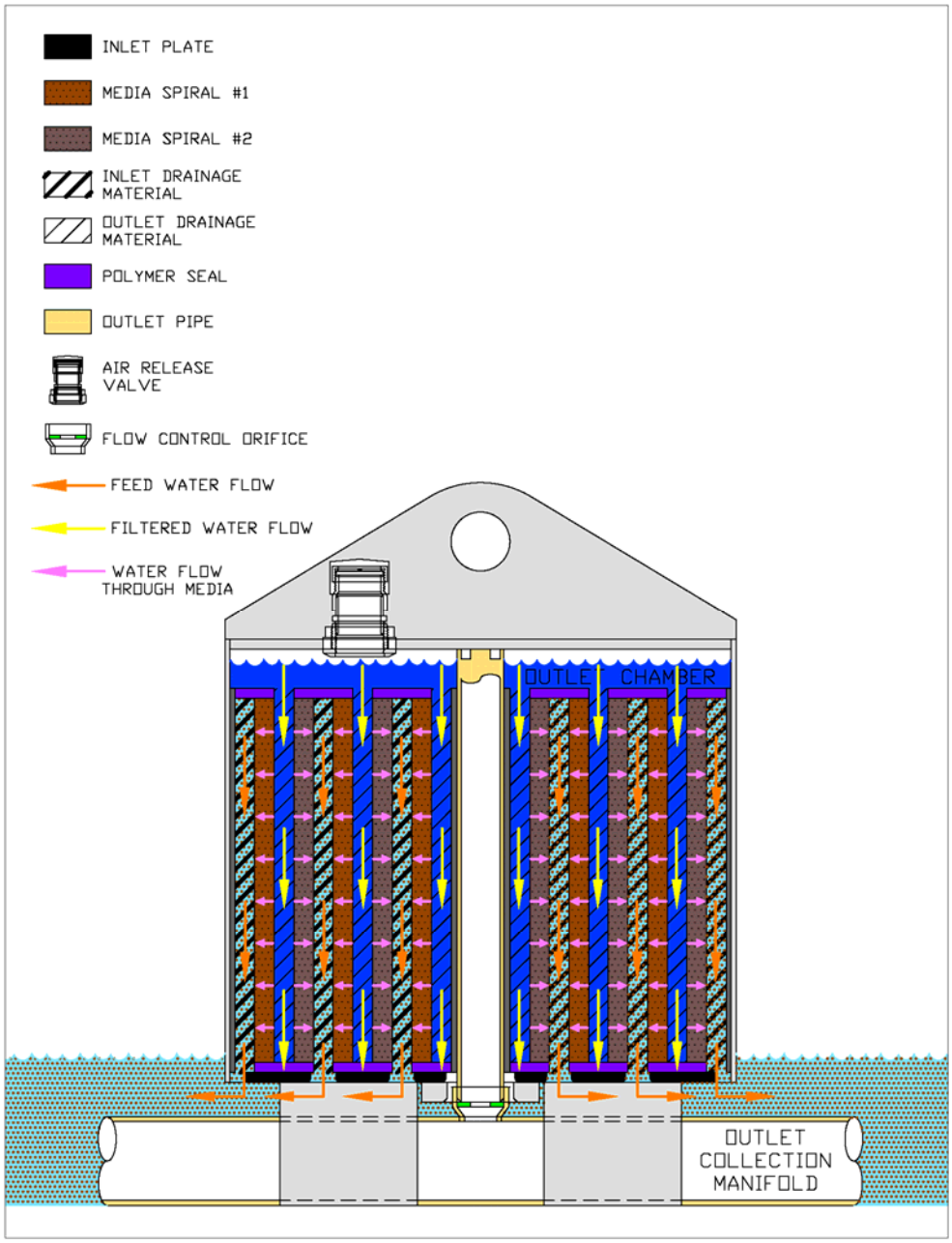

Figure A-5: Backwash

Appendix

B

System Drawings

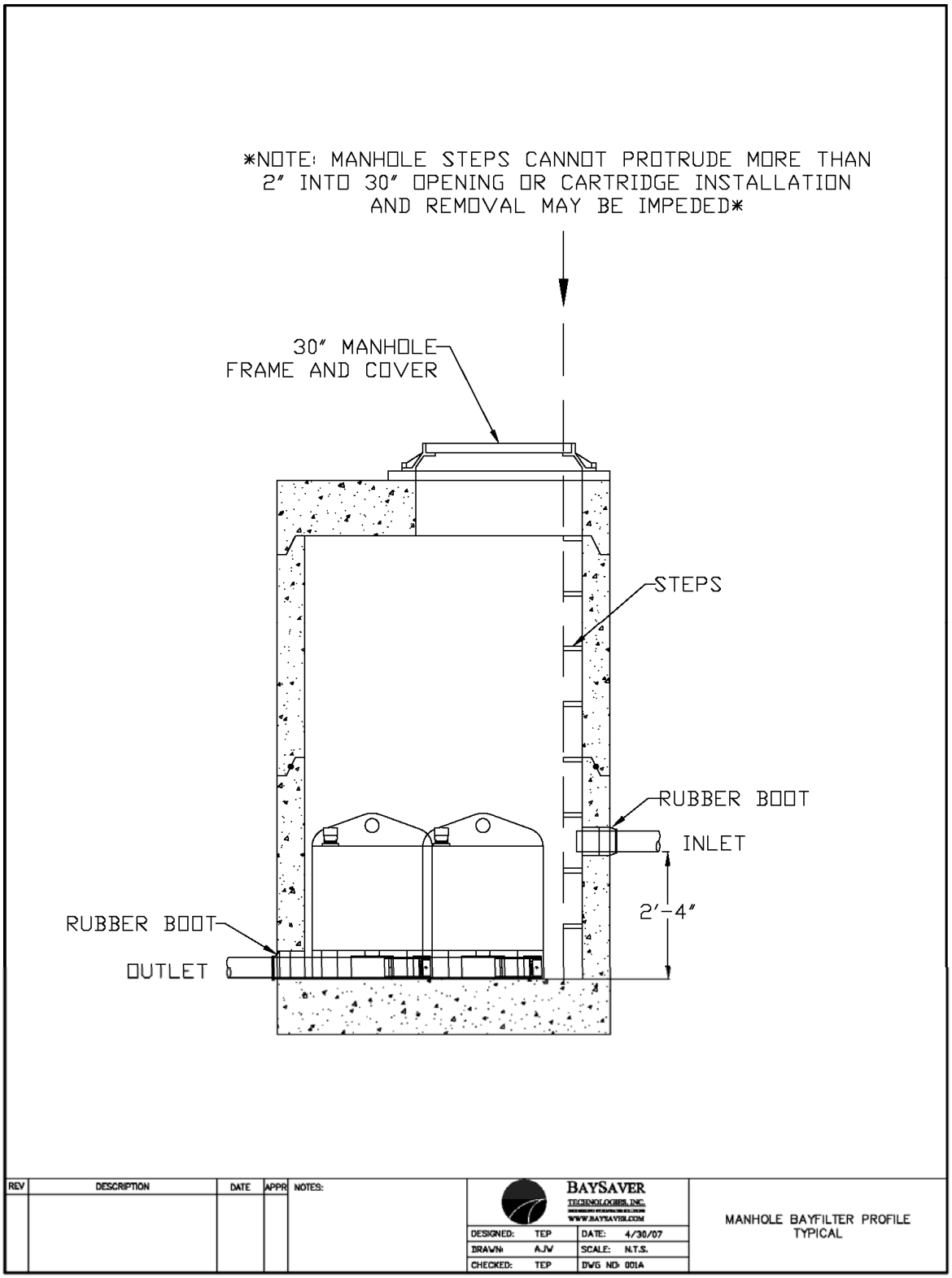
NOTE: MANHOLE STEPS CANNOT PROTRUDE MORE THAN 2" INTO 30" OPENING OR CARTRIDGE INSTALLATION AND REMOVAL MAY BE IMPEDED
30" MANHOLE FRAME AND COVER
STEPS
RUBBER BOOT
INLET
2'-4"
RUBBER BOOT
OUTLET
REV
DESCRIPTION
DATE
APPR
NOTES:
BAYSAVER
TECHNOLOGIES, INC.
WWW.BAYSAVER.COM
DESIGNED: TEP
DATE: 4/30/07
DRAWN: AJW
SCALE: N.T.S.
CHECKED: TEP
DWG NO: 001A
MANHOLE BAYFILTER PROFILE
TYPICAL

BAYFILTER STORMWATER FILTRATION SYSTEM PROTECTED BY U.S. PATENT # 6,869,528

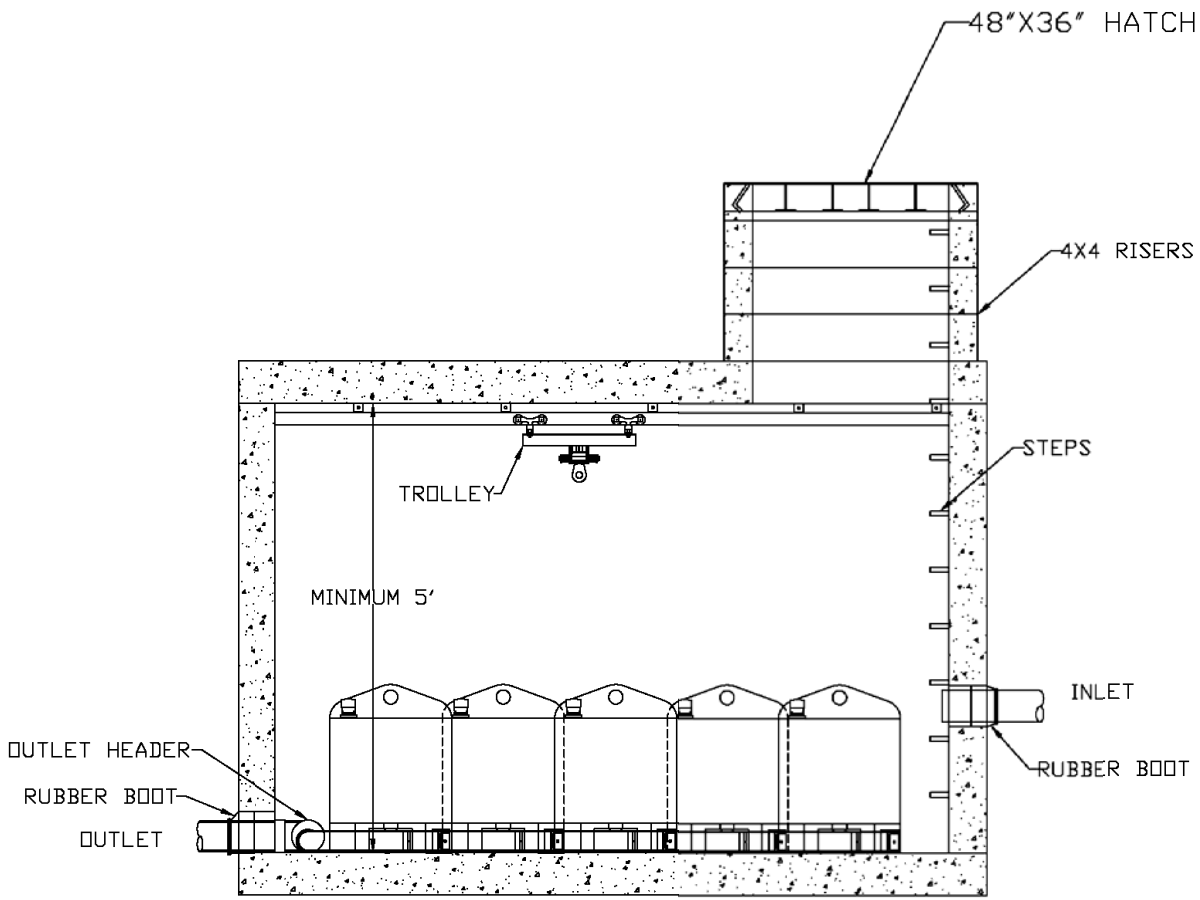

REV	DESCRIPTION	DATE	APPR	NOTES:

BAYSAVER TECHNOLOGIES, INC.
WWW.BAYSAVER.COM

DESIGNED:	TEP	DATE:	4/30/07
DRAWN:	AJW	SCALE:	N.T.S.
CHECKED:	AJW	DWG NO:	BF-208

VAULT BAYFILTER PROFILE
TYPICAL

BAYFILTER STORMWATER FILTRATION SYSTEM PROTECTED BY U.S. PATENT # 6,869,528

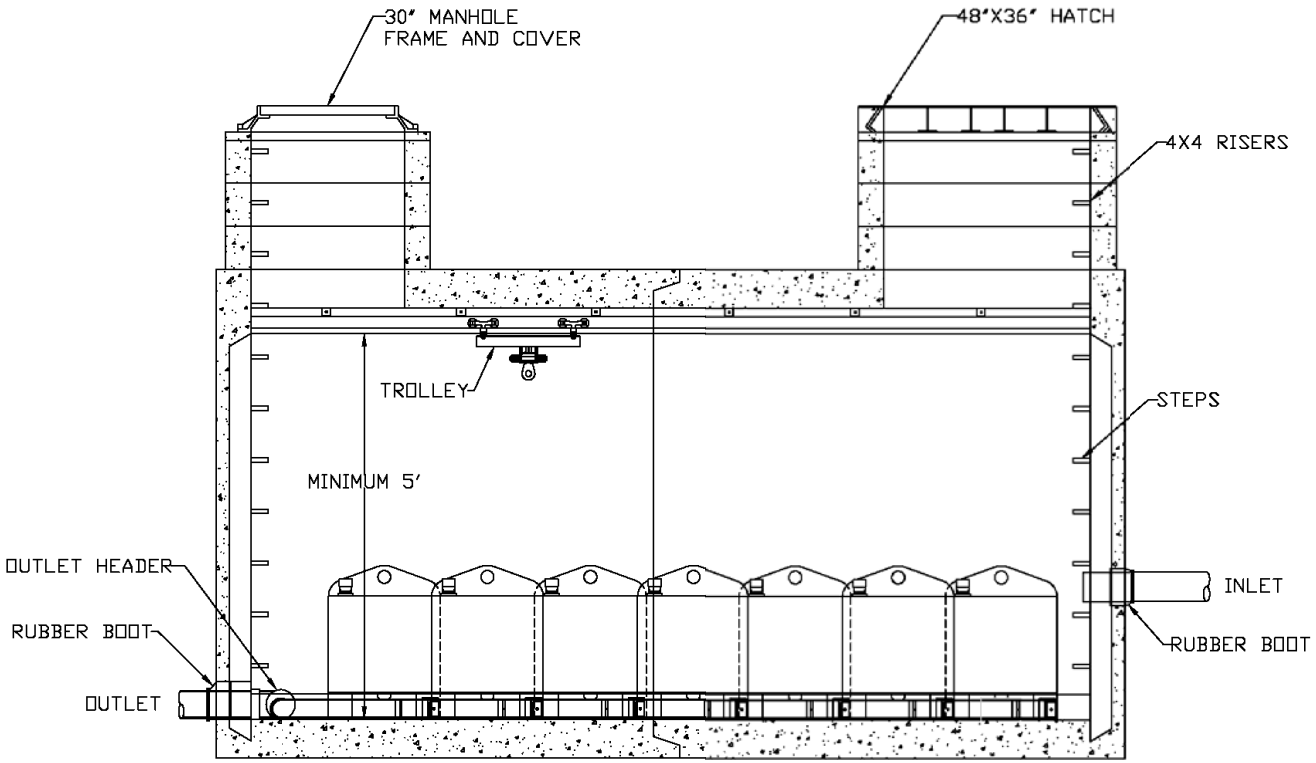

REV	DESCRIPTION	DATE	APPR	NOTES:

BAYSAVER TECHNOLOGIES, INC.
WWW.BAYSAVER.COM

DESIGNED:	TEP	DATE:	4/30/07
DRAWN:	AJW	SCALE:	N.T.S.
CHECKED:	AJW	DWG NO:	BF-209

BOX CULVERT BAYFILTER PROFILE
TYPICAL

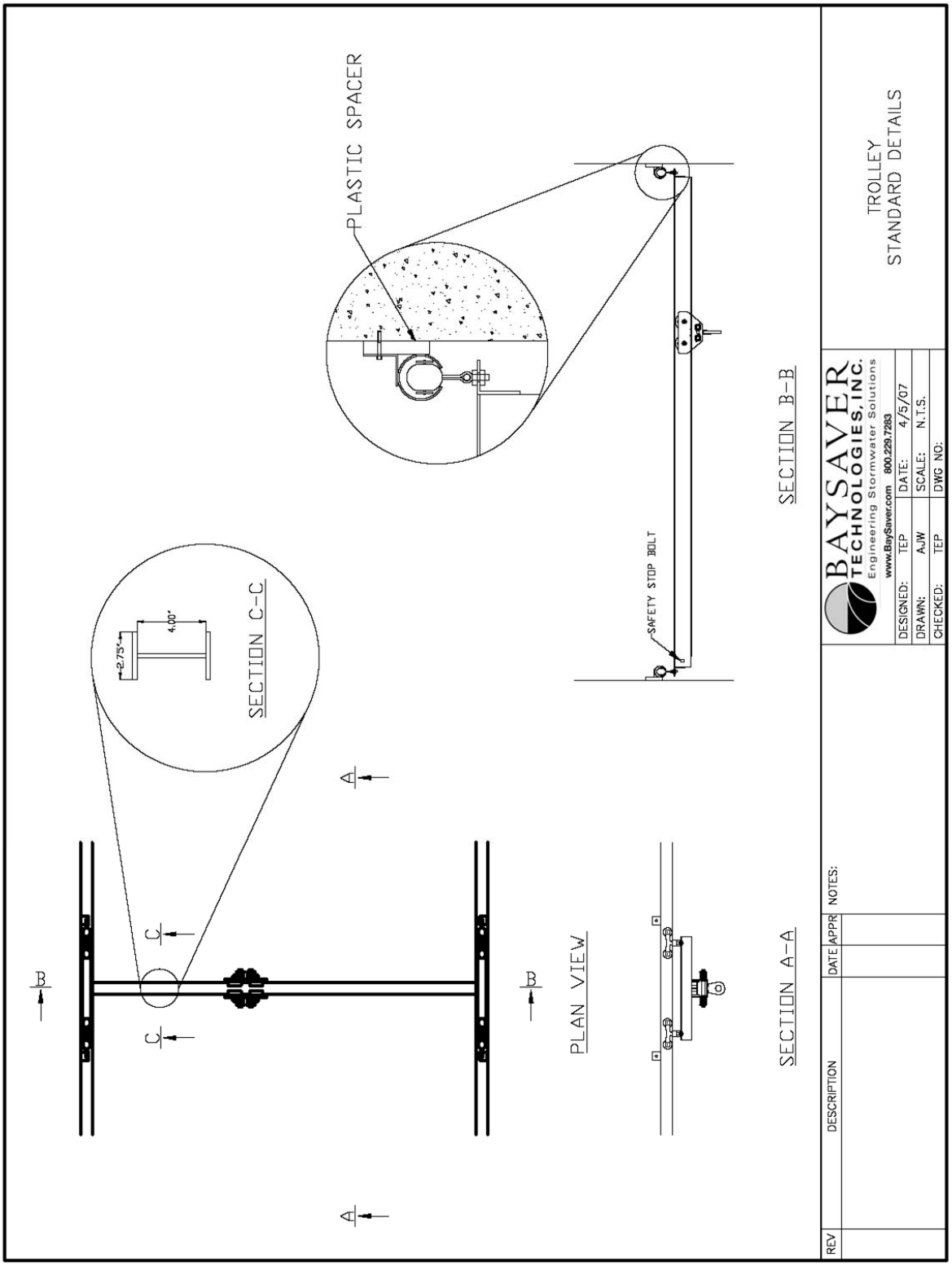
PLASTIC SPACER
SECTION C-C
2.75"
4.00"
SECTION B-B
SAFETY STOP BOLT
PLAN VIEW
SECTION A-A
A
B
C
TROLLEY
STANDARD DETAILS
BAYSAVER
TECHNOLOGIES, INC.
Engineering Stormwater Solutions
www.BaySaver.com 800.229.7283
DESIGNED: TEP
DATE: 4/5/07
DRAWN: AJW
SCALE: N.T.S.
CHECKED: TEP
DWG NO:
REV
DESCRIPTION
DATE
APPR
NOTES:

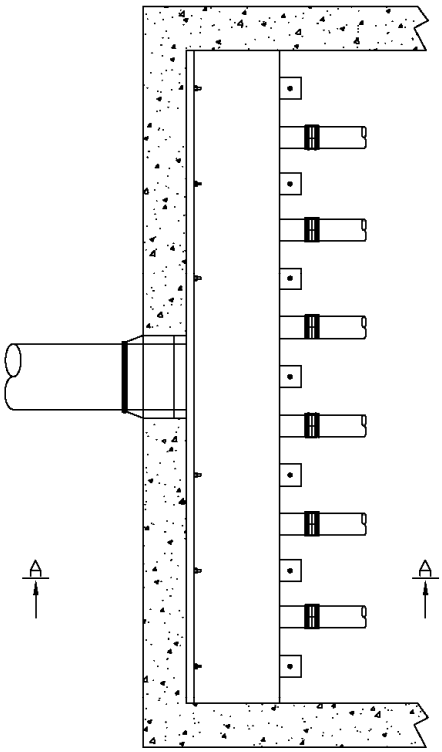

PLAN VIEW

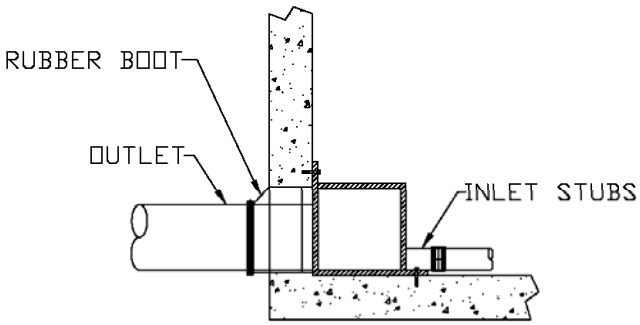

SECTION A-A

REV	DESCRIPTION	DATE	APPR	NOTES:

BAYSAVER TECHNOLOGIES, INC.
WWW.BAYSAVER.COM

DESIGNED:	TEP	DATE:	5/1/07
DRAWN:	AJW	SCALE:	N.T.S.
CHECKED:	JAM	DWG NO:	

OUTLET HEADER
STANDARD DETAIL

BAYFILTER STORMWATER FILTRATION SYSTEM PROTECTED BY U.S. PATENT # 6,869,528

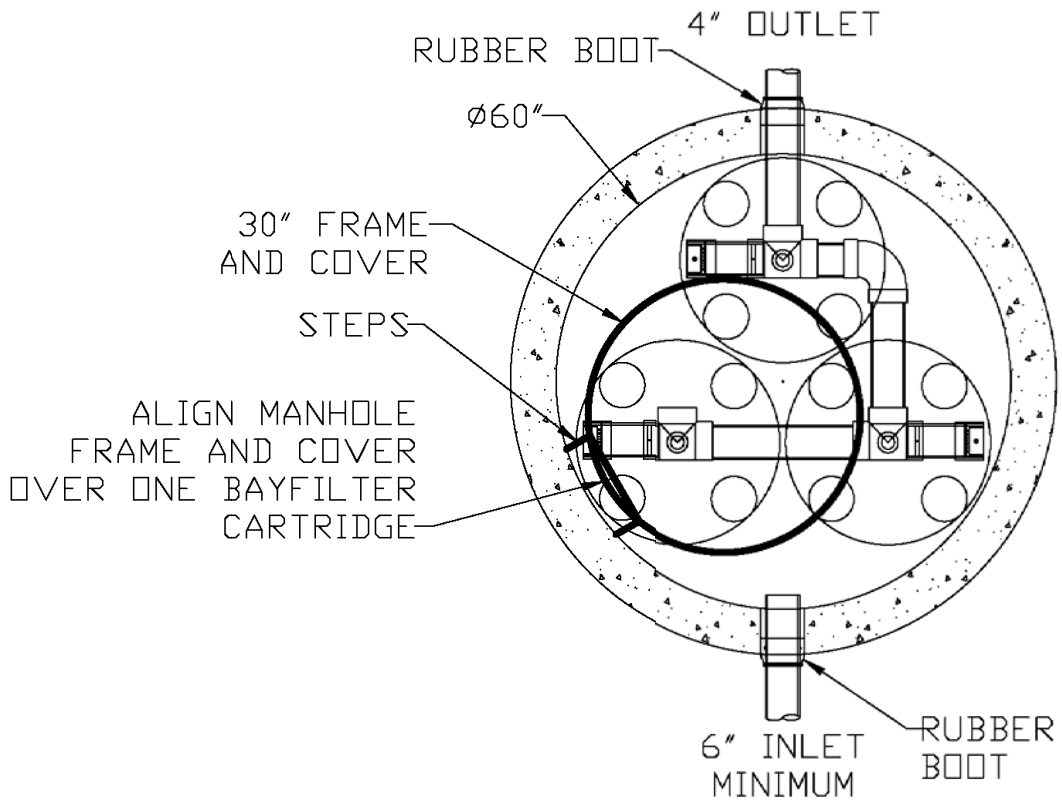

REV	DESCRIPTION	DATE	APPR	NOTES:

BAYSAVER TECHNOLOGIES, INC.
WWW.BAYSAVER.COM

DESIGNED:	TEP	DATE:	11/7/08
DRAWN:	EKH	SCALE:	N.T.S.
CHECKED:	EKH	DWG NO:	BF-101

MANHOLE BAYFILTER
MODEL MHF-60-3

BAYFILTER STORMWATER FILTRATION SYSTEM PROTECTED BY U.S. PATENT # 6,869,528

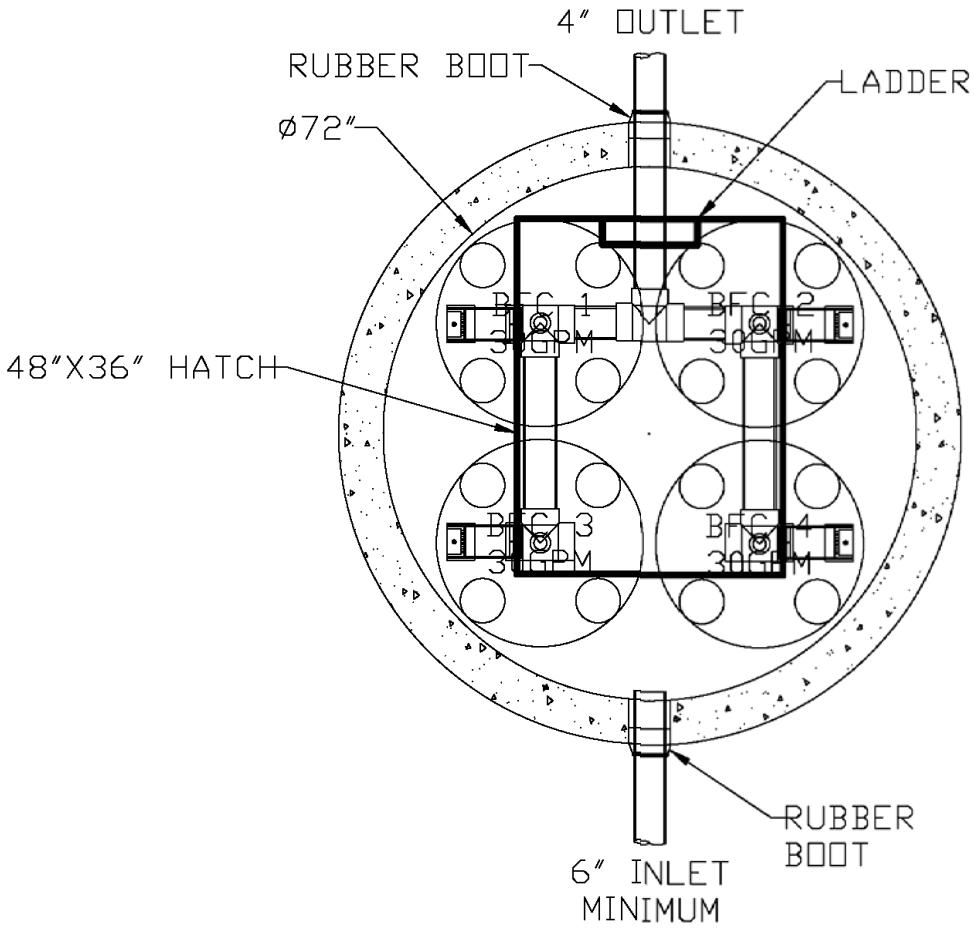

REV	DESCRIPTION	DATE	APPR	NOTES:

BAYSAVER TECHNOLOGIES, INC.
WWW.BAYSAVER.COM

DESIGNED:	TEP	DATE:	8/6/08
DRAWN:	EKH	SCALE:	N.T.S.
CHECKED:	EKH	DWG NO:	BF-102

MANHOLE BAYFILTER
MODEL MHF-72-4

BAYFILTER STORMWATER FILTRATION SYSTEM PROTECTED BY U.S. PATENT # 6,869,528

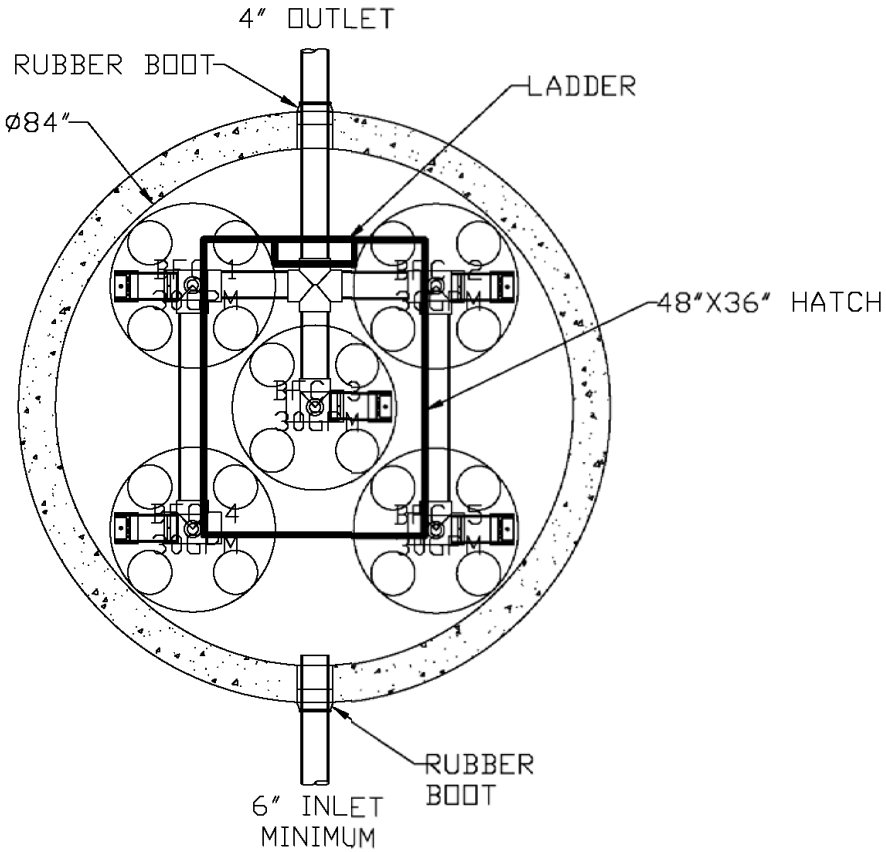

REV	DESCRIPTION	DATE	APPR	NOTES:

BAYSAVER TECHNOLOGIES, INC.
WWW.BAYSAVER.COM

DESIGNED:	TEP	DATE:	3/7/07
DRAWN:	AJW	SCALE:	N.T.S.
CHECKED:	AJW	DWG NO:	BF-103

MANHOLE BAYFILTER
MODEL MHF-84-5

BAYFILTER STORMWATER FILTRATION SYSTEM PROTECTED BY U.S. PATENT # 6,869,528

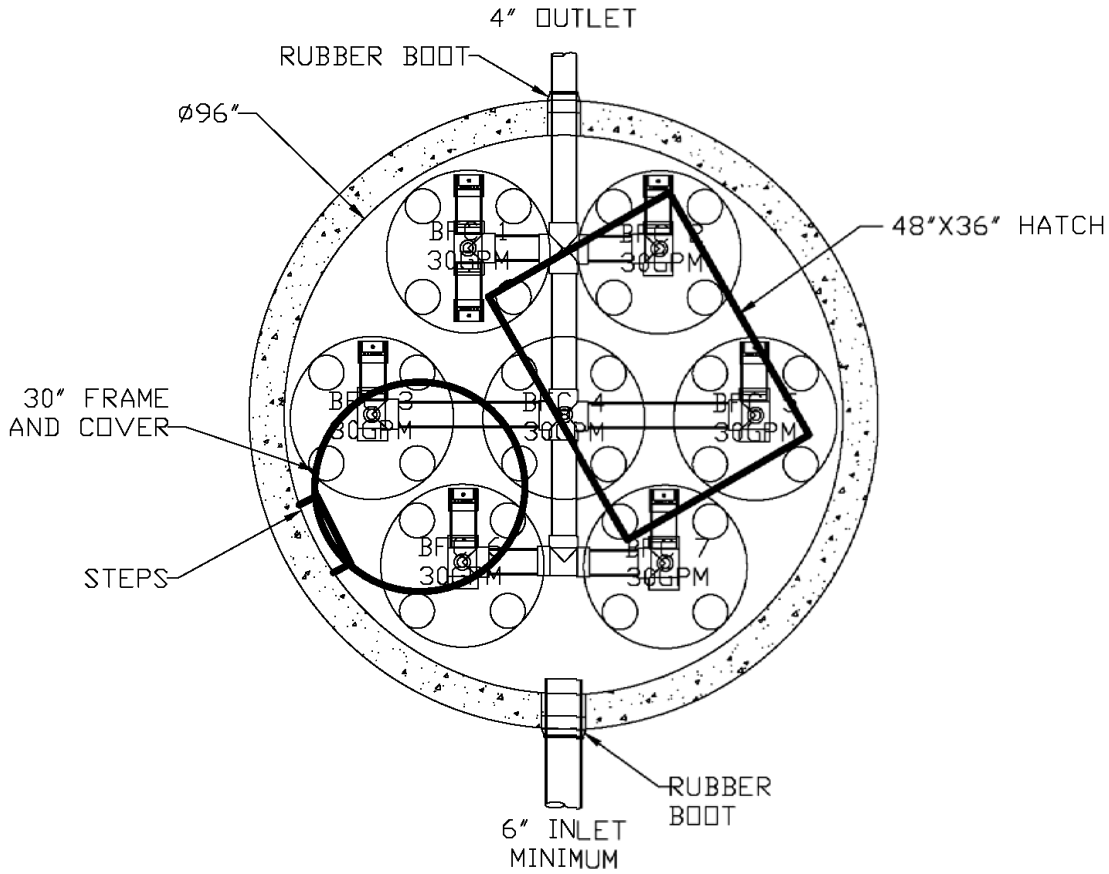

REV	DESCRIPTION	DATE	APPR	NOTES:

BAYSAVER TECHNOLOGIES, INC.
WWW.BAYSAVER.COM

DESIGNED:	TEP	DATE:	9/16/08
DRAWN:	EKH	SCALE:	N.T.S.
CHECKED:	EKH	DWG NO:	BF-104

MANHOLE BAYFILTER
MODEL MHF-96-7

BAYFILTER STORMWATER FILTRATION SYSTEM PROTECTED BY U.S. PATENT # 6,869,528

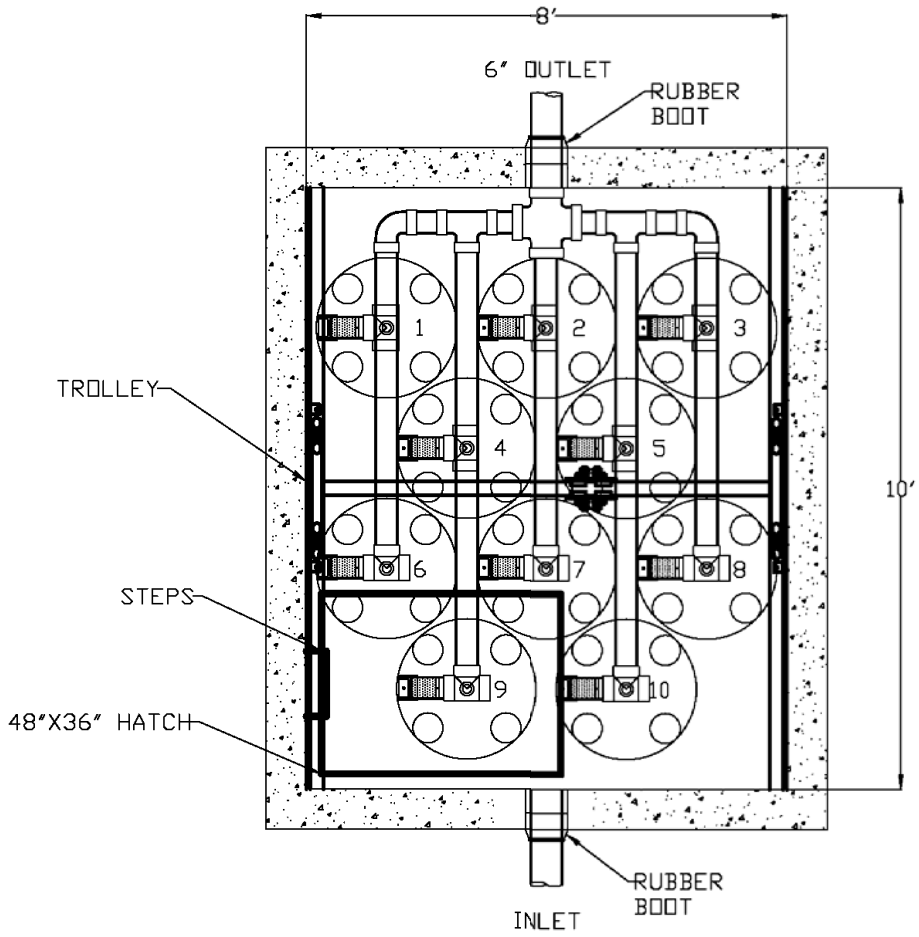

REV	DESCRIPTION	DATE	APPR	NOTES:

BAYSAVER TECHNOLOGIES, INC.
WWW.BAYSAVER.COM

DESIGNED:	TEP	DATE:	9/16/08
DRAWN:	EKH	SCALE:	N.T.S.
CHECKED:	EKH	DWG NO:	BF-207

VAULT BAYFILTER
MODEL PVF-8-10-10

BAYFILTER STORMWATER FILTRATION SYSTEM PROTECTED BY U.S. PATENT # 6,869,528

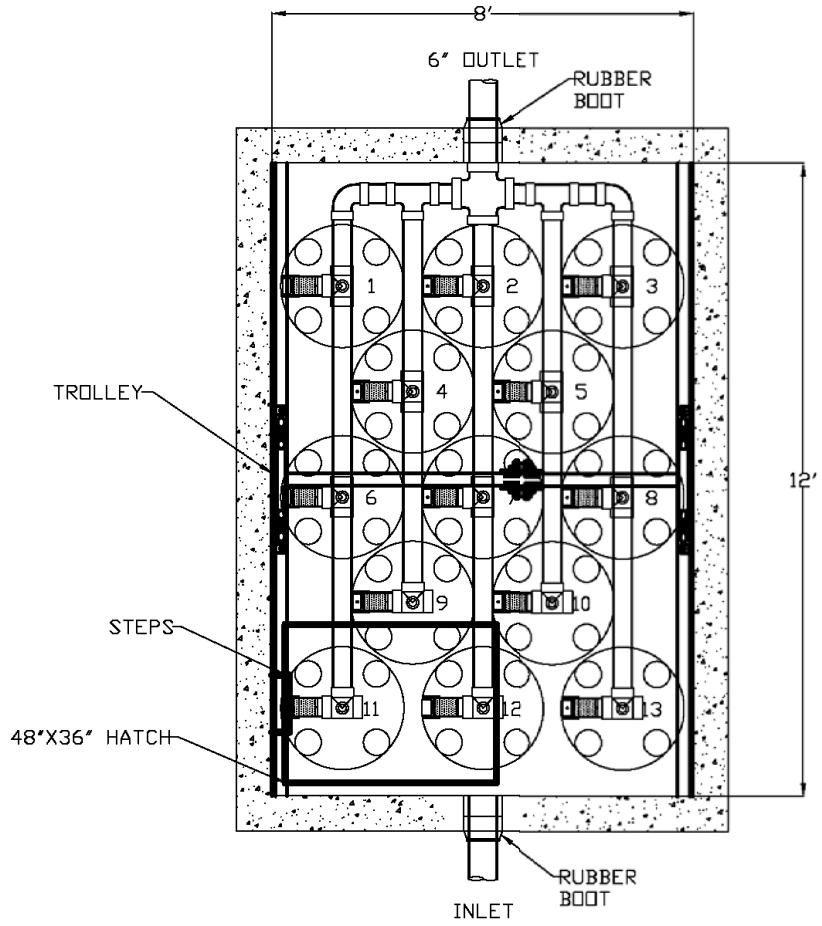

REV	DESCRIPTION	DATE	APPR	NOTES:

BAYSAVER TECHNOLOGIES, INC.
WWW.BAYSAVER.COM

DESIGNED:	TEP	DATE:	9/16/08
DRAWN:	EKH	SCALE:	N.T.S.
CHECKED:	EKH	DWG NO:	BF-208

VAULT BAYFILTER
MODEL PVF-8-12-13

BAYFILTER STORMWATER FILTRATION SYSTEM PROTECTED BY U.S. PATENT # 6,869,528

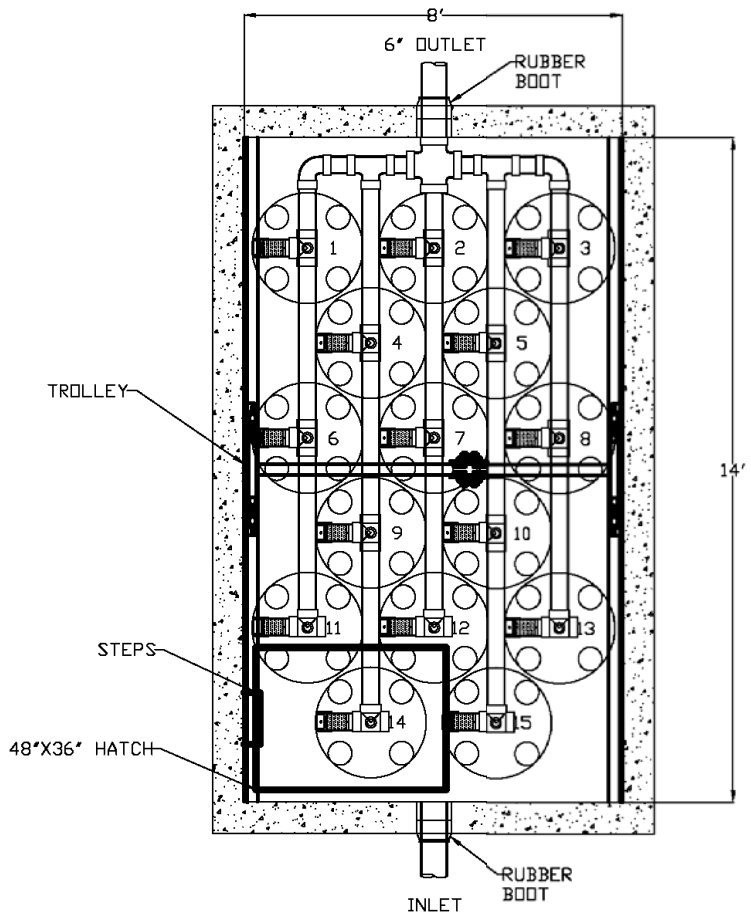

REV	DESCRIPTION	DATE	APPR	NOTES:

BAYSAVER TECHNOLOGIES, INC.
WWW.BAYSAVER.COM

DESIGNED:	TEP	DATE:	9/16/08
DRAWN:	EKH	SCALE:	N.T.S.
CHECKED:	EKH	DWG NO:	BF-209

VAULT BAYFILTER
MODEL PVF-8-14-15

BAYFILTER STORMWATER FILTRATION SYSTEM PROTECTED BY U.S. PATENT # 6,869,528

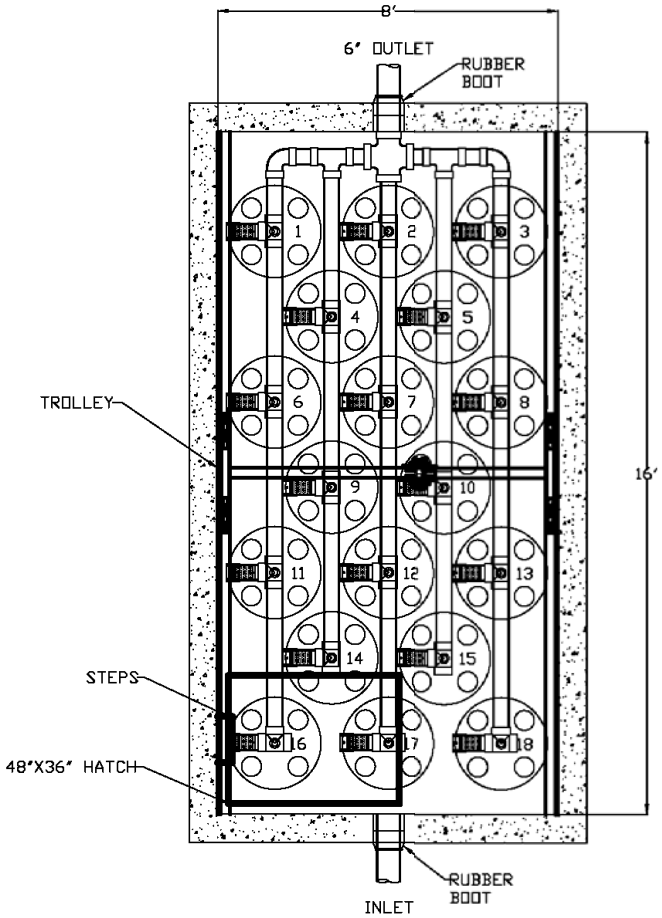

REV	DESCRIPTION	DATE	APPR	NOTES:

BAYSAVER TECHNOLOGIES, INC.
WWW.BAYSAVER.COM

DESIGNED:	TEP	DATE:	3/7/07
DRAWN:	AJW	SCALE:	N.T.S.
CHECKED:	AJW	DWG NO:	BF-210

VAULT BAYFILTER
MODEL PVF-8-16-18

BAYFILTER STORMWATER FILTRATION SYSTEM PROTECTED BY U.S. PATENT # 6,869,528

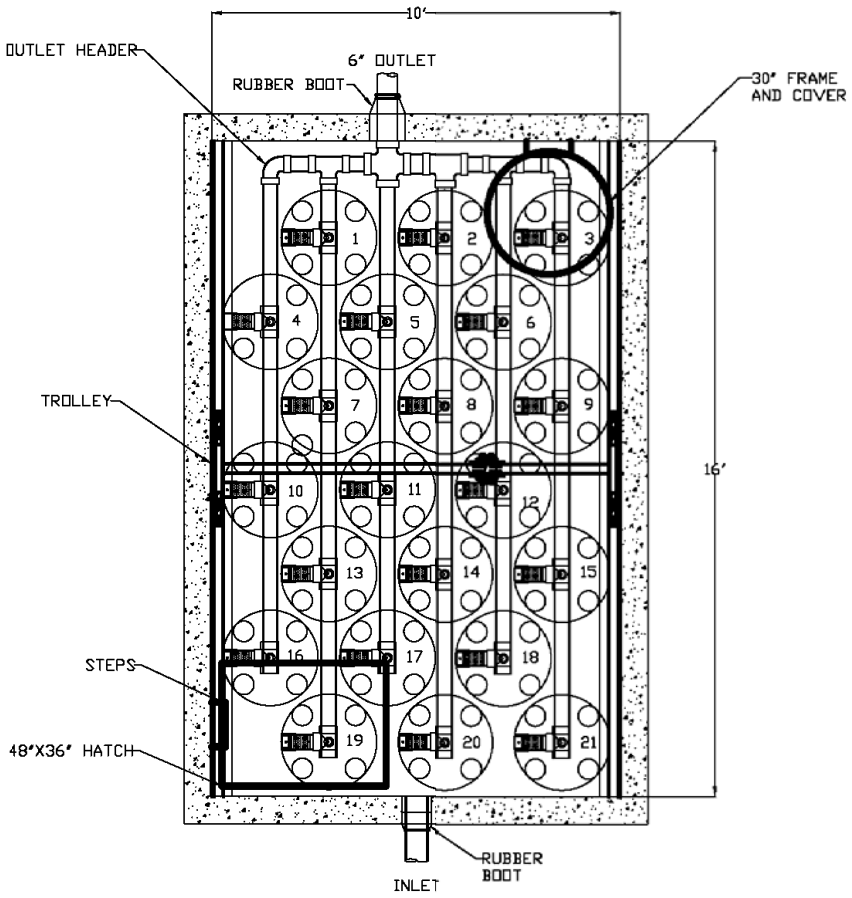

REV	DESCRIPTION	DATE	APPR	NOTES:

BAYSAVER
TECHNOLOGIES, INC.
WWW.BAYSAVER.COM

DESIGNED:	TEP	DATE:	11/14/07
DRAWN:	EKH	SCALE:	N.T.S.
CHECKED:	AJW	DWG NO:	BF-203

VAULT BAYFILTER
MODEL PVF-10-16-21
PRELIMINARY

BAYFILTER STORMWATER FILTRATION SYSTEM PROTECTED BY U.S. PATENT # 6,869,528

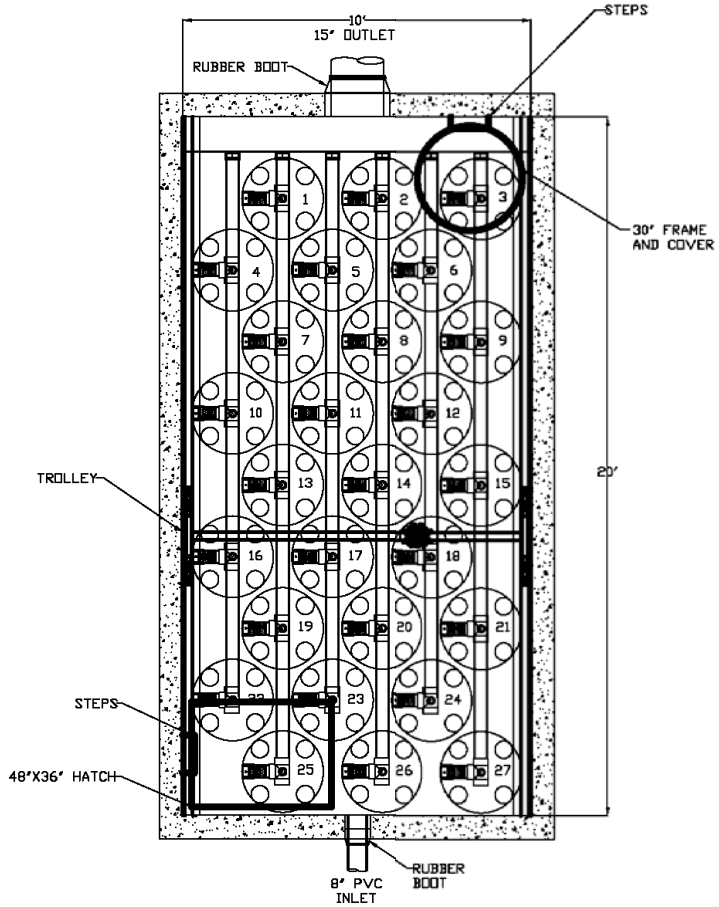

REV	DESCRIPTION	DATE	APPR	NOTES:

BAYSAVER
TECHNOLOGIES, INC.
WWW.BAYSAVER.COM

DESIGNED:	TEP	DATE:	11/14/07
DRAWN:	EKH	SCALE:	N.T.S.
CHECKED:	AJW	DWG NO:	BF-203

VAULT BAYFILTER
MODEL PVF-10-20-27
PRELIMINARY

BAYFILTER STORMWATER FILTRATION SYSTEM PROTECTED BY U.S. PATENT # 6,869,528

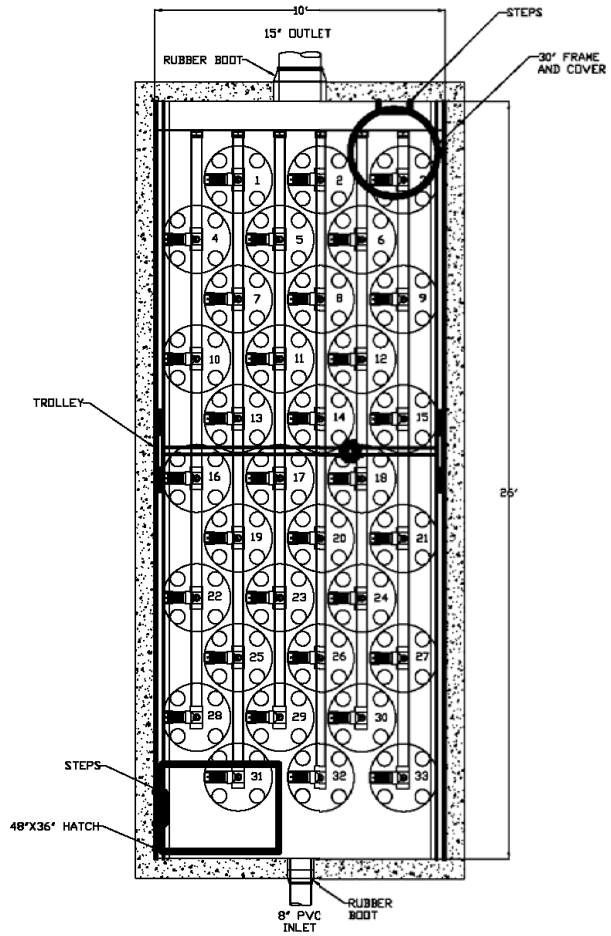

REV	DESCRIPTION	DATE	APPR	NOTES:

BAYSAVER
TECHNOLOGIES, INC.
WWW.BAYSAVER.COM

DESIGNED:	TEP	DATE:	11/14/07
DRAWN:	EKH	SCALE:	N.T.S.
CHECKED:	AJW	DWG NO:	BF-203

VAULT BAYFILTER
MODEL PVF-10-26-33
PRELIMINARY

BAYFILTER STORMWATER FILTRATION SYSTEM PROTECTED BY U.S. PATENT # 6,869,528

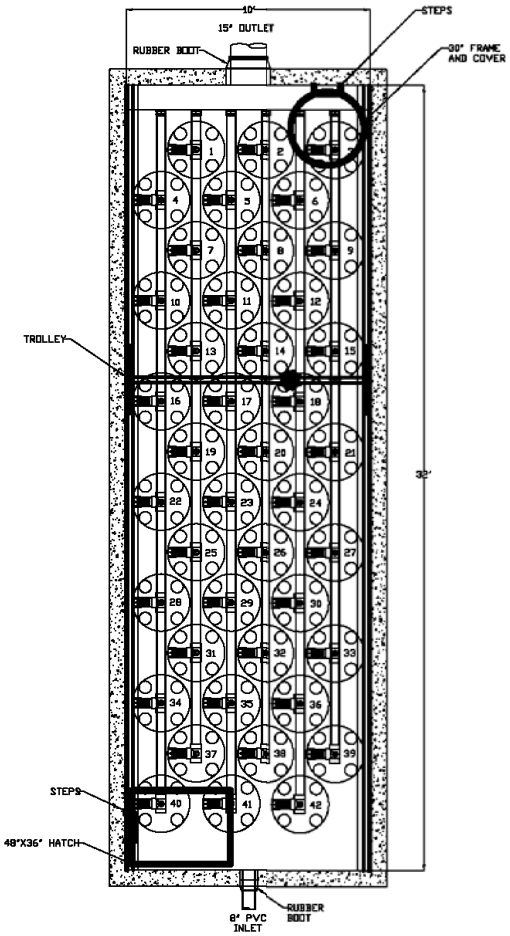

REV	DESCRIPTION	DATE	APPR	NOTES:

BAYSAVER
TECHNOLOGIES, INC.
WWW.BAYSAVER.COM

DESIGNED:	TEP	DATE:	9/30/08
DRAWN:	EKH	SCALE:	N.T.S.
CHECKED:	EKH	DWG NO:	BF-204

VAULT BAYFILTER
PRELIMINARY
MODEL PVF-10-32-42

BAYFILTER STORMWATER FILTRATION SYSTEM PROTECTED BY U.S. PATENT # 6,869,528

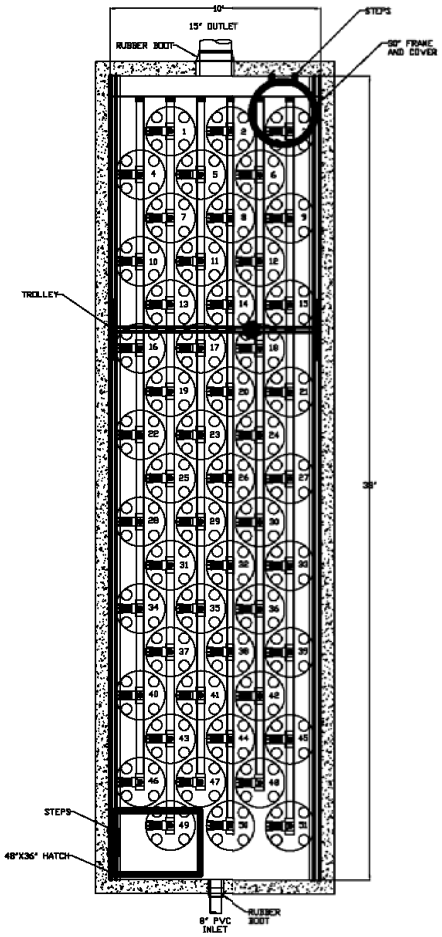

REV	DESCRIPTION	DATE	APPR	NOTES:

BAYSAVER
TECHNOLOGIES, INC.
WWW.BAYSAVER.COM

DESIGNED:	TEP	DATE:	11/14/07
DRAWN:	EKH	SCALE:	N.T.S.
CHECKED:	AJW	DWG NO:	BF-203

VAULT BAYFILTER
MODEL PVF-10-38-51
PRELIMINARY

BAYFILTER STORMWATER FILTRATION SYSTEM PROTECTED BY U.S. PATENT # 6,869,528

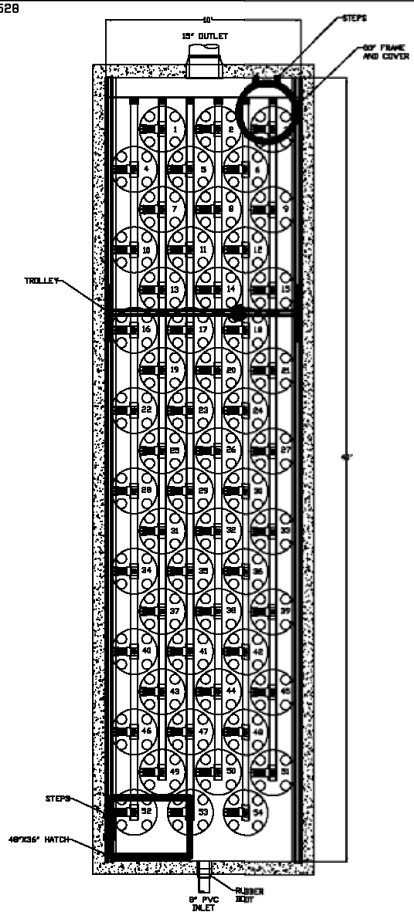

REV	DESCRIPTION	DATE	APPR	NOTES:

BAYSAVER
TECHNOLOGIES, INC.
WWW.BAYSAVER.COM

DESIGNED:	TEP	DATE:	9/29/08
DRAWN:	EKH	SCALE:	N.T.S.
CHECKED:	EKH	DWG NO:	BF-203

VAULT BAYFILTER
MODEL PVF-10-40-54
PRELIMINARY

BAYFILTER STORMWATER FILTRATION SYSTEM PROTECTED BY U.S. PATENT # 6,869,528

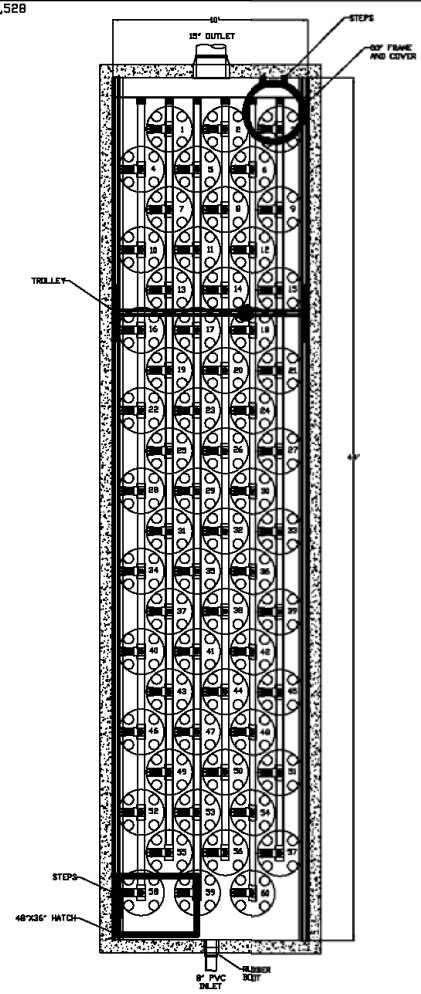

REV	DESCRIPTION	DATE	APPR	NOTES:

BAYSAVER
TECHNOLOGIES, INC.
WWW.BAYSAVER.COM

DESIGNED:	TEP	DATE:	9/29/08
DRAWN:	EKH	SCALE:	N.T.S.
CHECKED:	EKH	DWG NO:	BF-203

VAULT BAYFILTER
MODEL PVF-10-44-60
PRELIMINARY

BAYFILTER STORMWATER FILTRATION SYSTEM PROTECTED BY U.S. PATENT # 6,869,528

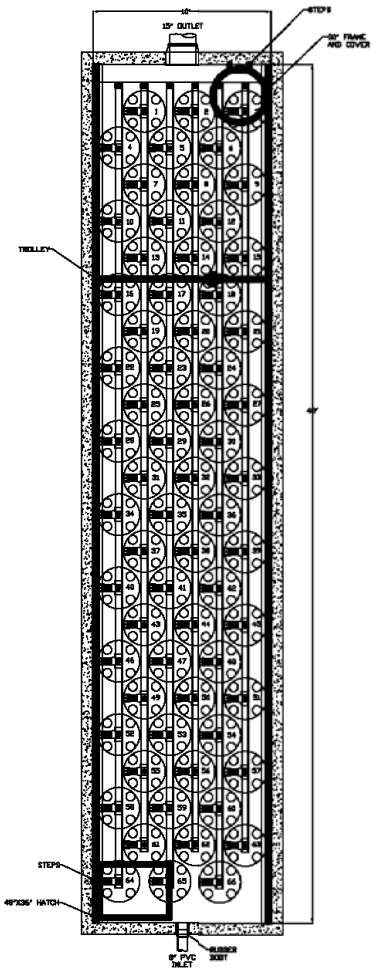

REV	DESCRIPTION	DATE	APPR	NOTES:

BAYSAVER
TECHNOLOGIES, INC.
WWW.BAYSAVER.COM

DESIGNED:	TEP	DATE:	9/29/08
DRAWN:	EKH	SCALE:	N.T.S.
CHECKED:	EKH	DWG NO:	BF-203

VAULT BAYFILTER
MODEL PVF-10-48-66
PRELIMINARY

Appendix

C

Project Information Sheet

BAYSAVER TECHNOLOGIES, INC.
Engineering Stormwater Solutions

BayFilter™ Sizing Form

Project Contact Information		
Company Name		Date
Contact Name	☐Engineer ☐Developer ☐Contractor	
Project Name	Email	
Telephone	Fax	
City	State Zip	
Site Characteristics ☐Residential ☐Commercial ☐Industrial ☐Mixed		Due Date
Additional comments/project information		

Design and Sizing Parameters	
Total Drainage Area (acres)	Impervious Area (acres)
Required Treatment Flow CFS (if applicable)	Water Quality Volume to be Detained ☐75% ☐100% Other
Water Quality Volume (ft^3)	Project Location: City ST

Regulatory Requirements	
% Total Suspended Solids Removal (ex. 80%)	% Total Phosphorus Removal (ex. 50%)
Project Stage ☐Conceptual Design ☐Preliminary Design ☐Final Design ☐Other	
Other Site Specific Sizing Criteria	

Thank you for supplying the required information! You're almost done!
We will also need:

- √ Plan(s) View
- √ Profile(s)

MKTG0013A#

Please email this form and any drawings to **Engineering@BaySaver.com**
Phone 800-BAYSAVER (800.229.7283) Fax 301.829.3747