State of New Jersey

PHILIP D. MURPHY
Governor

SHEILA Y. OLIVER
Lt. Governor

DEPARTMENT OF ENVIRONMENTAL PROTECTION
Mail Code – 401-02B
Division of Water Quality
Bureau of Nonpoint Pollution Control
P.O. Box 420 – 401 E. State St.
Trenton, NJ 08625-0420
Phone: (609) 633-7021 / Fax: (609) 777-0432
http://www.state.nj.us/dep/dwq/bnpc_home.htm

CATHERINE R. McCABE
Commissioner

July 20, 2020

Jay Holtz, P.E.
Director of Regulatory Management
Oldcastle Infrastructure
7000 Central Parkway, Suite 800
Atlanta, GA 30328

Re: MTD Laboratory Certification – Revised Certification
PerkFilter™ Media Filtration System by Oldcastle Infrastructure
On-line Installation

TSS Removal Rate 80%

Dear Mr. Holtz:

This revised certification letter supersedes the Department's prior certification dated June 30, 2017. This revision was completed as a result of a change to the company name (formerly Oldcastle Precast), and the development of an updated maintenance manual. No other modifications were made to this certification.

The Stormwater Management rules under N.J.A.C. 7:8-5.5(b) and 5.7(c) allow the use of manufactured treatment devices (MTDs) for compliance with the design and performance standards at N.J.A.C. 7:8-5 if the pollutant removal rates have been verified by the New Jersey Corporation for Advanced Technology (NJCAT) and have been certified by the New Jersey Department of Environmental Protection (NJDEP). Oldcastle Infrastructure has requested a Laboratory Certification for the PerkFilter™ Media Filtration System.

This project falls under the "Procedure for Obtaining Verification of a Stormwater Manufactured Treatment Device from New Jersey Corporation for Advanced Technology" dated January 25, 2013. The applicable protocol is the "New Jersey Department of Environmental Protection Laboratory Protocol to Assess Total Suspended Solids Removal by a Filtration Manufactured Treatment Device" dated January 25, 2013.

NJCAT verification documents submitted to the NJDEP indicate that the requirements of the afore-mentioned protocol have been met or exceeded. The NJCAT letter also included a recommended certification TSS removal rate and the required maintenance plan. The NJCAT Verification Report with the Verification Appendix for this device is published online at http://www.njcat.org/verification-process/technology-verification-database.html

The NJDEP certifies the use of the PerkFilter™ Media Filtration System by Oldcastle Infrastructure at a TSS removal rate of 80% when designed, operated and maintained in accordance with the information provided in the Verification Appendix and subject to the following conditions:

1. The maximum treatment flow rate (MTFR) for the manufactured treatment device (MTD) is calculated using the New Jersey Water Quality Design Storm (1.25 inches in 2 hrs) in N.J.A.C. 7:8-5.5. The MTFR is calculated based on a verified loading rate of 2.54 gpm/ft^2 of effective filtration treatment area.

2. The PerkFilter™ Media Filtration System shall be installed using the same configuration as the unit verified by NJCAT, and sized in accordance with the criteria specified in item 6 below.

3. This device cannot be used in series with another MTD or a media filter (such as a sand filter), to achieve an enhanced removal rate for total suspended solids (TSS) removal under N.J.A.C. 7:8-5.5.

4. Additional design criteria for MTDs can be found in Chapter 9.6 of the New Jersey Stormwater Best Management Practices (NJ Stormwater BMP) Manual, which can be found on-line at www.njstormwater.org.

5. The maintenance plan for a site using this device shall incorporate, at a minimum, the maintenance requirements for the PerkFilter™ Media Filtration System, which is attached to this document. However, it is recommended to review the maintenance website at https://oldcastleinfrastructure.com/wp-content/uploads/2018/10/OSS_PerkFilter_InspMaint_Feb-2019_v1.pdf any changes to the maintenance requirements.

6. Sizing Requirements:

   The example below demonstrates the sizing procedure for a PerkFilter™ Media Filtration System.

   Example: A 0.25-acre impervious site is to be treated to 80% TSS removal using a PerkFilter™ Media Filtration System. The impervious site runoff (Q) based on the New Jersey Water Quality Design Storm was determined to be 0.79 cfs or 354.58 gpm.

   The calculation of the minimum number of cartridges for use in the PerkFilter™ Media Filtration System is based upon both the MTFR and the maximum inflow drainage area. It is necessary to calculate the required number of cartridges using both methods and to rely on the method that results in the highest number of cartridges determined by the two methods.

Inflow Drainage Area Evaluation:

The drainage area to the PerkFilter™ Media Filtration System in this example is 0.25 acres. Based upon the information in Table 1 below, the following minimum numbers of cartridges are required in a PerkFilter™ Media Filtration System to treat the impervious area without exceeding the maximum without exceeding the maximum drainage area:

1. Nine (9) 12" cartridges;
2. Six (6) 18" cartridges;
3. Five (5) 24" cartridges; or
4. Four (4) 30" cartridges.

Maximum Treatment Flow Rate (MTFR) Evaluation:

The site runoff (Q) was determined based on the following:

time of concentration = 10 minutes
i = 3.2 in/hr (page 5-8, Fig. 5-3 of the NJ Stormwater BMP Manual)
c = 0.99 (runoff coefficient for impervious)
Q = ciA = 0.99x3.2x0.25=0.79 cfs, or 0.79 x 448.83 = 354.58 gpm

Based on a flow rate of 354.58 gpm, the following minimum numbers of cartridges are required in a PerkFilter™ Media Filtration System without exceeding the MTFR:

1. Thirty (30) 12" cartridges;
2. Twenty (20) 18" cartridges;
3. Fifteen (15) 24" cartridges; or
4. Twelve (12) 30" cartridges.

The MTFR Evaluation results will be used since that method results in the higher minimum configuration determined by the two methods.

The sizing table corresponding to the available system models is noted below:

Table 1 PerkFilter™ Cartridge Heights and NJ Cartridge Treatment Capabilities

PerkFilter Cartridge Height (inches)	Filtration Treatment Area (sq. ft)	Maximum Treatment Flow Rate, MTFR (gpm)	Mass Capture Capacity (lb)	Maximum Allowable Drainage Area (acres)
12	4.7	12	17.2	0.029
18	7.1	18	25.7	0.043
24	9.4	24	34.3	0.057
30	11.8	30	42.9	0.072

Be advised a detailed maintenance plan is mandatory for any project with a Stormwater BMP subject to the Stormwater Management Rules, N.J.A.C. 7:8. The plan must include all of the items identified in Stormwater Management Rules, N.J.A.C. 7:8-5.8. Such items include, but are not limited to, the list of indication of problems in the system, and training of maintenance personnel. Additional information can be found in Chapter 8: Maintenance and Retrofit of Stormwater Management Measures.

If you have any questions regarding the above information, please contact Jim Murphy of my office at (609) 633-7021.

Sincerely,

Gabriel Mahon

Gabriel Mahon, Chief
Bureau of Nonpoint Pollution Control

Attachment: Maintenance Plan

cc: Chron File
Richard Magee, NJCAT
Vince Mazzei, NJDEP - DLUR
Jim Murphy, NJDEP - BNPC
Brian Salvo, NJDEP – BNPC

Oldcastle Infrastructure™
A CRH COMPANY

PERKFILTER™

Inspection and Maintenance Guide

Water

PerkFilter™ Media Filtration System

Description

The PerkFilter is a stormwater treatment device used to remove pollutants from urban runoff. Impervious surfaces and other urban and suburban landscapes generate a variety of contaminants that can enter stormwater and pollute downstream receiving waters. The PerkFilter is a media-filled cartridge filtration device designed to capture and retain sediment, gross solids, metals, nutrients, hydrocarbons, and trash and debris. As with any stormwater treatment system, the PerkFilter requires periodic maintenance to sustain optimum system performance.

Function

The PerkFilter is a water quality treatment system consisting of three chambers: an inlet chamber, a filter cartridge treatment chamber, and an outlet chamber (Figure 1). Stormwater runoff enters the inlet chamber through an inlet pipe, curb opening, or grated inlet. Gross solids are settled out, and floating trash and debris are trapped in the inlet chamber. Pretreated flow is then directed to the treatment chamber through an opening in the baffle wall between the inlet chamber and treatment chamber. The treatment chamber contains media-filled filter cartridges (Figure 2) that use physical and chemical processes to remove pollutants. During a storm event, runoff pools in the treatment chamber before passing radially through the cylindrical cartridges from the outside surface, through the media for treatment, and into the center of the cartridge. At the center of the cartridge is a center tube assembly designed to distribute the hydraulic load evenly across the surface of the filter cartridge and control the treatment flow rate. The center tube assembly discharges treated flow through the false floor and into the outlet chamber. A draindown feature built into each cartridge allows the treatment chamber to dewater between storm events.

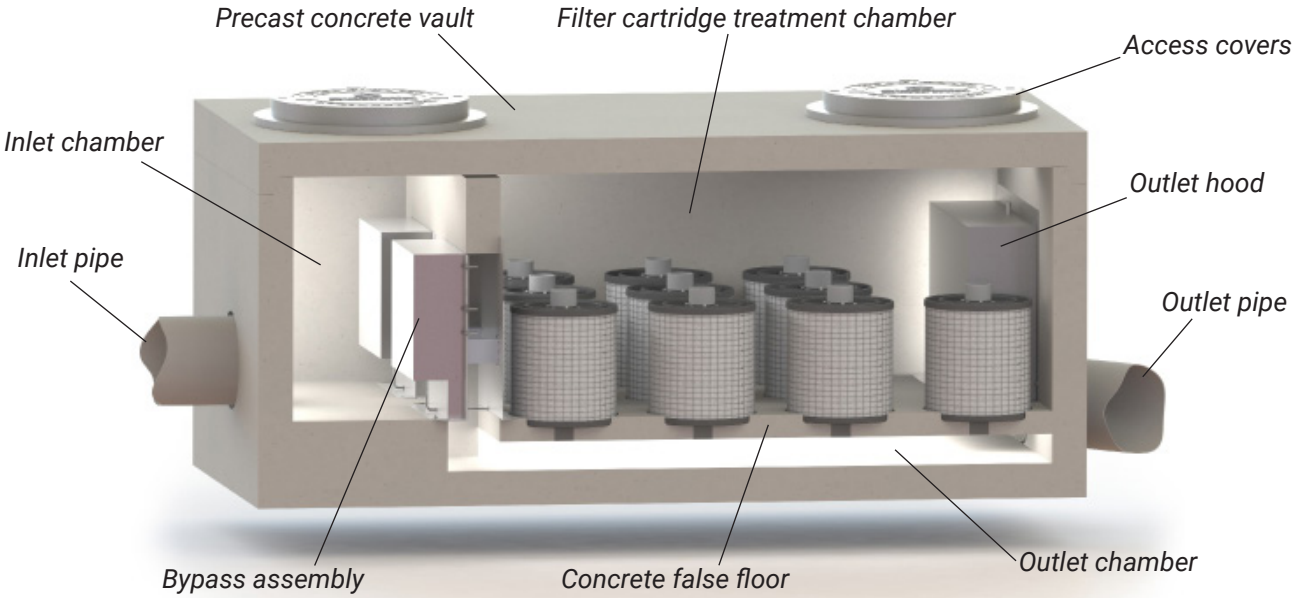

Figure 1. Schematic of the PerkFilter system.

All PerkFilter systems include a high-flow bypass assembly to divert flow exceeding the treatment capacity of the filter cartridges around the treatment chamber. The bypass assembly routes peak flow from the inlet chamber directly to the outlet chamber, bypassing the treatment chamber to prevent sediment and other captured pollutants from being scoured and re-entrained by high flow. Treated flow and bypass flow merge in the outlet chamber for discharge by a single outlet pipe.

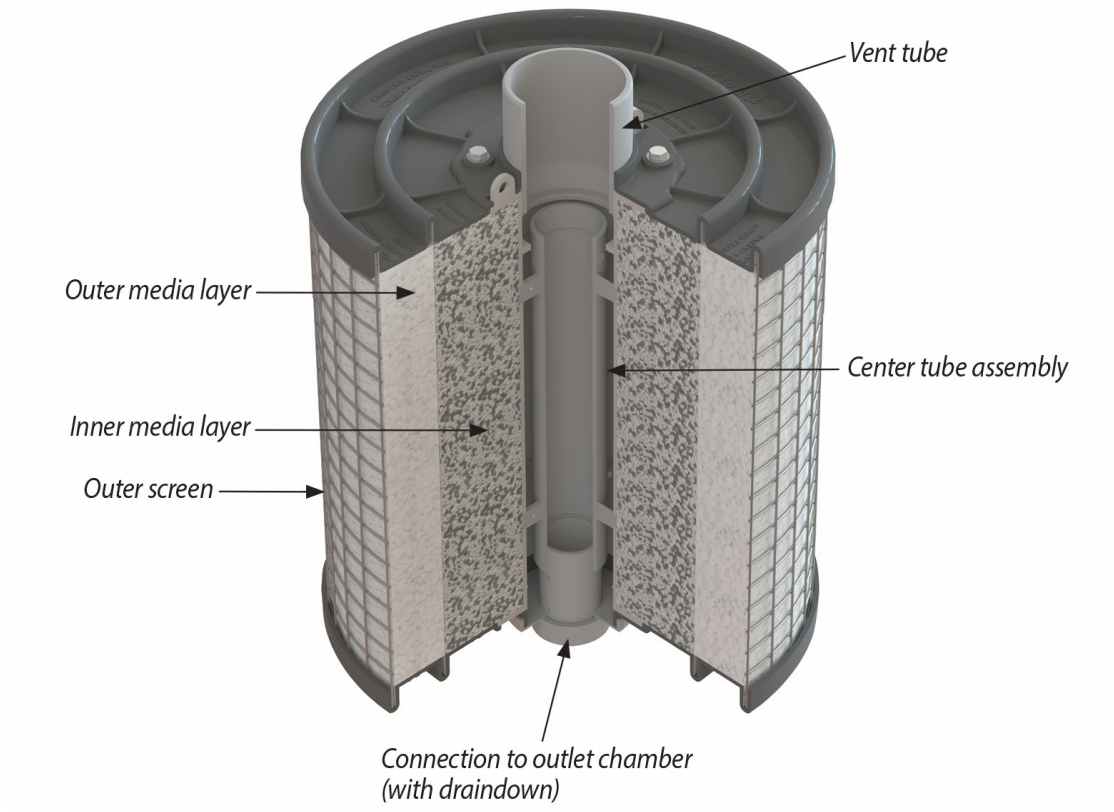

Figure 2. Schematic of PerkFilter cartridge.

Configuration

The PerkFilter structure may consist of a vault, manhole, or catch basin configuration. Catch basin units may be fabricated from concrete or steel. Internal components including the PerkFilter cartridges are manufactured from durable plastic and stainless steel components and hardware. All cartridges are 18 inches in diameter and are available in two heights: 12-inch and 18-inch. Cartridges may be used alone or may be stacked (Figure 3) to provide 24-inch and 30-inch combinations. The capacity of each cartridge or cartridge combination is dictated by the allowable operating rate of the media and the outer surface area of the cartridge. Thus, taller cartridges have greater treatment capacity than shorter cartridges, but they also require more hydraulic drop across the system. Cartridges may be filled with a wide variety of media but the standard mix is composed of zeolite, perlite and carbon (ZPC).

Access to an installed PerkFilter system is typically provided by ductile iron castings or hatch covers. The location and number of access appurtenances is dependent on the size and configuration of the system.

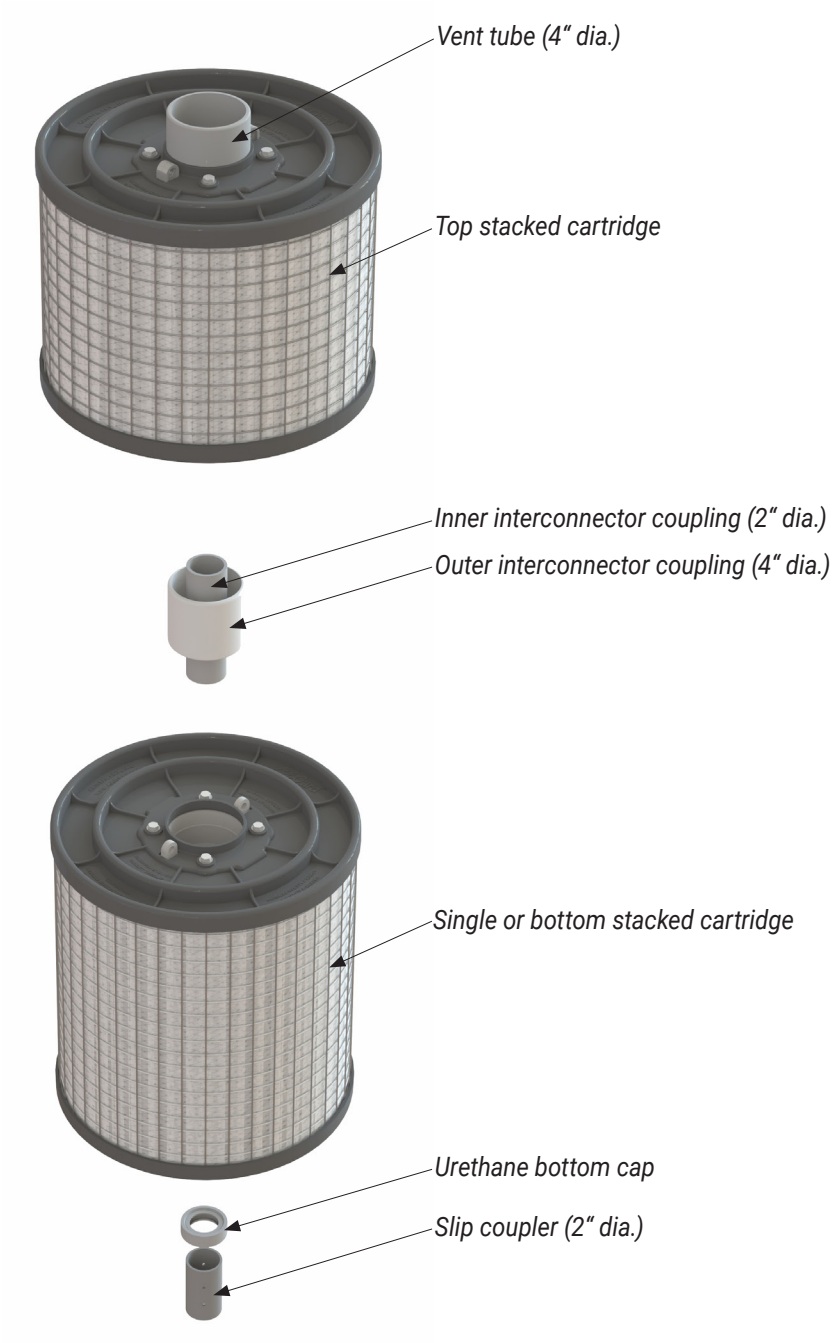

Figure 3. Schematic of stacked cartridges and connector components.

Maintenance Overview

State and local regulations require all stormwater management systems to be inspected on a periodic basis and maintained as necessary to ensure performance and protect downstream receiving waters. Maintenance prevents excessive pollutant buildup that can limit system performance by reducing the operating capacity and increasing the potential for scouring of pollutants during periods of high flow.

Inspection and Maintenance Frequency

The PerkFilter should be inspected on a periodic basis, typically twice per year, and maintained as required. Initially, inspections of a new system should be conducted more frequently to help establish an appropriate site-specific inspection frequency. The maintenance frequency will be driven by the amount of runoff and pollutant loading encountered by a given system. In most cases, the optimum maintenance interval will be one to three years. Inspection and maintenance activities should be performed only during dry weather periods.

Inspection Equipment

The following equipment is helpful when conducting PerkFilter inspections:

- Recording device (pen and paper form, voice recorder, iPad, etc.)
- Suitable clothing (appropriate footwear, gloves, hardhat, safety glasses, etc.)
- Traffic control equipment (cones, barricades, signage, flagging, etc.)
- Socket and wrench for bolt-down access covers
- Manhole hook or pry bar
- Flashlight
- Tape measure
- Measuring stick or sludge sampler
- Long-handled net (optional)

Inspection Procedures

PerkFilter inspections are visual and may be conducted from the ground surface without entering the unit. To complete an inspection, safety measures including traffic control should be deployed before the access covers are removed. Once the covers have been removed, the following items should be checked and recorded (see form provided at the end of this document) to determine whether maintenance is required:

- Inspect the internal components and note whether there are any broken or missing parts. In the unlikely event that internal parts are broken or missing, contact Oldcastle Infrastructure at (800) 579-8819 to determine appropriate corrective action.
- Note whether the inlet pipe is blocked or obstructed. The outlet pipe is covered by a removable outlet hood and cannot be observed without entering the unit.
- Observe, quantify and record the accumulation of floating trash and debris in the inlet chamber. The significance of accumulated floating trash and debris is a matter of judgment. A long-handled net may be used to retrieve the bulk of trash and debris at the time of inspection if full maintenance due to accumulation of floating oils or settled sediment is not yet warranted.

- Observe, quantify and record the accumulation of oils in the inlet chamber. The significance of accumulated floating oils is a matter of judgment. However, if there is evidence of an oil or fuel spill, immediate maintenance by appropriate certified personnel is warranted.
- Observe, quantify and record the average accumulation of sediment in the inlet chamber and treatment chamber. A calibrated dipstick, tape measure, or sludge sampler may be used to determine the amount of accumulated sediment in each chamber. The depth of sediment may be determined by calculating the difference between the measurement from the rim of the PerkFilter to the top of the accumulated sediment, and the measurement from the rim of the PerkFilter to the bottom of the PerkFilter structure. Finding the top of the accumulated sediment below standing water takes some practice and a light touch, but increased resistance as the measuring device is lowered toward the bottom of the unit indicates the top of the accumulated sediment.
- Finally, observe, quantify and record the amount of standing water in the treatment chamber around the cartridges. If standing water is present, do not include the depth of sediment that may have settled out below the standing water in the measurement.

Maintenance Triggers

Maintenance should be scheduled if any of the following conditions are identified during the inspection:

- Internal components are broken or missing.
- Inlet piping is obstructed.
- The accumulation of floating trash and debris that cannot be retrieved with a net and/or oil in the inlet chamber is significant.
- There is more than 6” of accumulated sediment in the inlet chamber.
- There is more than 4” of accumulated sediment in the treatment chamber.
- There is more than 4” of standing water in the treatment chamber more than 24 hours after end of rain event.
- A hazardous material release (e.g. automotive fluids) is observed or reported.
- The system has not been maintained for 3 years (wet climates) to 5 years (dry climates).

Maintenance Equipment

The following equipment is helpful when conducting PerkFilter maintenance:

- Suitable clothing (appropriate footwear, gloves, hardhat, safety glasses, etc.)
- Traffic control equipment (cones, barricades, signage, flagging, etc.)
- Socket and wrench for bolt-down access covers
- Manhole hook or pry bar
- Confined space entry equipment, if needed
- Flashlight
- Tape measure
- 9/16” socket and wrench to remove hold-down struts and filter cartridge tops
- Replacement filter cartridges
- Vacuum truck with water supply and water jet

Contact Oldcastle Infrastructure at (800) 579-8819 for replacement filter cartridges. A lead time of four weeks is recommended.

Maintenance Procedures

Maintenance should be conducted during dry weather when no flow is entering the system. Confined space entry is necessary to maintain vault and manhole PerkFilter configurations. Only personnel that are OSHA Confined Space Entry trained and certified may enter underground structures. Confined space entry is not required for catch basin PerkFilter configurations. Once safety measures such as traffic control are deployed, the access covers may be removed and the following activities may be conducted to complete maintenance:

- Remove floating trash, debris and oils from the water surface in the inlet chamber using the extension nozzle on the end of the boom hose of the vacuum truck. Continue using the vacuum truck to completely dewater the inlet chamber and evacuate all accumulated sediment from the inlet chamber. Some jetting may be required to fully remove sediment. The inlet chamber does not need to be refilled with water after maintenance is complete. The system will fill with water when the next storm event occurs.
- Remove the hold-down strut from each row of filter cartridges and then remove the top of each cartridge (the top is held on by four 9/16” bolts) and use the vacuum truck to evacuate the spent media. When empty, the spent cartridges may be easily lifted off their slip couplers and removed from the vault. The couplers may be left inserted into couplings cast into the false floor to prevent sediment and debris from being washed into the outlet chamber during washdown.
- Once all the spent cartridges have been removed from the structure, the vacuum truck may be used to evacuate all accumulated sediment from the treatment chamber. Some jetting may be required to fully remove sediment. Take care not to wash sediment and debris through the openings in the false floor and into the outlet chamber. All material removed from the PerkFilter during maintenance including the spent media must be disposed of in accordance with local, state, and/or federal regulations. In most cases, the material may be handled in the same manner as disposal of material removed from sumped catch basins or manholes.
- Place a fresh cartridge in each cartridge position using the existing slip couplers and urethane bottom caps. If the vault is equipped with stacked cartridges, the existing outer and inner interconnector couplers must be used between the stacked cartridges to provide hydraulic connection. Transfer the existing vent tubes from the spent cartridges to the fresh cartridges. Finally, refit the struts to hold the fresh cartridges in place.
- Securely replace access covers, as appropriate.
- Make arrangements to return the empty spent cartridges to Oldcastle Infrastructure.

PerkFilter
Inspection and Maintenance Log

Location_____

Structure Configuration and Size:

Inspection Date_____

☐ Vault _____feet x _____feet
☐ Manhole _____feet diameter
☐ Catch Basin _____feet x _____feet

Number and Height of Cartridge Stacks:

Count_____each ☐12" ☐ 18" ☐ 24" ☐ 30"

Media Type:

☐ ZPC ☐ Perlite ☐ Other_____

Condition of Internal Components ☐ Good ☐ Damaged ☐ Missing	Notes:
Inlet or Outlet Blockage or Obstruction ☐ Yes ☐ No	Notes:
Floating Trash and Debris ☐ Significant ☐ Not Significant	Notes:
Floating Oils ☐ Significant ☐ Not Significant ☐ Spill	Notes:
Sediment Depth in Inlet Chamber ☐ Inches of Sediment:_____	Notes:
Sediment Depth in Treatment Chamber ☐ Inches of Sediment:_____	Notes:
Standing Water in Treatment Chamber ☐ Inches of Standing Water:_____	Notes:

Maintenance Required

☐ **Yes - Schedule Maintenance** ☐ **No - Inspect Again in _____ Months**

PERKFILTER™

OUR MARKETS

BUILDING STRUCTURES

COMMUNICATIONS

WATER

ENERGY

TRANSPORTATION

Oldcastle Infrastructure™
A CRH COMPANY

www.oldcastleinfrastructure.com
800-579-8819

Water

February 2019 v.1