# NEW JERSEY SHELTERING TASK FORCE
## Shelter Facilities Workbook
## March 2019

This page intentionally left blank.

Table of Contents

# EXECUTIVE SUMMARY

## History

The New Jersey State Sheltering Task Force (STF) was established to evaluate and assess emergency evacuation sheltering capacity, identify gaps, and prepare recommendations to strengthen preparedness, response and recovery efforts for sheltering in each county. *Sheltering is primarily a local government function for which the State provides resource support and coordination during large scale incidents.* The STF is chaired by the Department of Human Services, and includes members of the New Jersey Office of Emergency Management, the Departments of Agriculture, Education, and Health, the Office of Homeland Security and Preparedness, the Office of the Governor and the American Red Cross.

The Sheltering Task Force conducted meetings in each of the 21 counties and several large urban areas with the Emergency Management Coordinator and county, municipal and volunteer agencies that support emergency sheltering. These meetings enabled the STF to identify best practices and support needed from State agencies and allied partners. The collective observations of the STF members, along with information provided by the counties, resulted in recommendations focused on planning guidance, addressing gaps in shelter operations (such as staffing, training, feeding etc.), and facility needs. The goal is to provide uniform guidance and to leverage partnerships across the state to assist local governments with their shelter planning and operational needs.

## Continuing Efforts

The STF has formed three subcommittees to address specific challenges that have been identified. The three subcommittees focus on: (i) shelter staffing; (ii) shelter facilities; and (iii) sheltering individuals with disabilities and others with access and functional needs. The subcommittees are a multi-agency effort, with representatives from state partners, NGOs, disability advocacy groups, and county representatives nominated by the New Jersey County Emergency Management Coordinators Association (NJCEMCA), who will work collaboratively to develop solutions to the challenges related to these areas of sheltering.

## BACKGROUND/OVERVIEW

The New Jersey Sheltering Task Force Facilities Subcommittee was created and convened in 2017 to provide guidance and expertise on facilities and logistics issues in sheltering. The Facilities Subcommittee is presently composed of representatives from the following state departments/agencies and organizations:

- American Red Cross, Chair
- Board of Public Utilities
- Department of Community Affairs/Division of Fire Safety
- Department of Education
- Department of Human Services
- Department of Treasury
- New Jersey Office of Emergency Management
- Somerset County Office of Emergency Management
- FEMA Integration Team

The Facilities Subcommittee reviewed meeting minutes from each of the STF meetings and identified the most commonly noted facilities and logistics challenges. The Facilities Subcommittee also reviewed after actions from disasters across the United States over the past 5 years. This document is a collection of works from the Facilities Subcommittee to aid in the logistics of opening and closing of shelters. In many cases, the Facilities Subcommittee does not own the rights to the documents, but all are open sourced and are available to be utilized by local, county, and state groups to aid in their sheltering efforts.

## BASIC SHELTER INFORMATION

**Site Name/ School District** _____ **NSS ID#** _____ **Date** _____

**Name of building** _____ **Building #** _____ **of** _____

**Phone #** _____ **Fax #** _____ **Website** _____

**Shelter address** _____

**Town/ City** _____ **County/ Parish** _____ **State** _____ **Zip Code** _____

**Mailing Address** (*if different*) _____

**Town/ City** _____ **County/ Parish** _____ **State** _____ **Zip Code** _____

**Agency operating shelter** (*check one*) ☐ Red Cross ☐ FEMA ☐ DHS ☐ TSA ☐ SBC ☐ Other _____

**Shelter agency type** (*check one*) ☐ Red Cross managed ☐ Red Cross partner ☐ Red Cross supported ☐ Independent _____

**Shelter type** (*check all that apply*) ☐ Evacuation ☐ General ☐ Medical ☐ Other _____

**General facility notes** _____

## Shelter Capacity

*Use the calculations to calculate the capacity for sleeping space.*

**Total sq feet** _____

**Sq feet usable for sleeping space** _____

☐ **Evacuation** _____ usable sq ft ÷ 20 sq ft/person = _____ person capacity

☐ **Post Impact** _____ usable sq ft ÷ 40 sq ft/person = _____ person capacity

☐ **Other** _____ usable sq ft ÷ _____ sq ft/person = _____ person capacity

## Geographic Information

*Use major landmarks (e.g. highways, intersections, rivers, railroad crossings, etc.) that will be easily recognizable in a disaster. Latitude and longitude coordinates can be found at online web sites, using a global positioning system device, or will auto populate when the address is entered into the National Shelter System.*

**Latitude** _____ **Longitude** _____ **Elevation** _____

**In storm surge/ evacuation** ☐ Yes **Hurricane category or evacuation area** _____ ☐ No | **In flood plain** ☐ Yes _____ **year flood impact** ☐ No

**Directions to facility** _____

## Point of Contact to *Authorize Use* of Facility

**Name** _____ **Title** _____ **Phone #** _____

**24 hour #** _____ **Fax #** _____ **Email** _____

**Contact notes** _____

## Point of Contact to *Open* Facility

**Name** _____ **Title** _____ **Phone #** _____

**24 hour #** _____ **Fax #** _____ **Email** _____

**Contact notes** _____

## Alternate Point of Contact

**Name** _____ **Title** _____ **Phone #** _____

**24 hour #** _____ **Fax #** _____ **Email** _____

**Contact notes** _____

## Pet Shelter

**Pet shelter space available on site** ☐ Yes *answer questions below* ☐ No **nearest location** _____

**Separate ventilation system** ☐ Yes ☐ No | **Cement or tile floors with drains** ☐ Yes ☐ No | **Outdoor space to relieve pets** ☐ Yes ☐ No

**Agency that will operate the pet shelter** _____ **Phone #** _____ **24 hour #** _____

## ADDITIONAL INFORMATION

**Shelter agreement signed** ☐ Yes ☐ No **Date signed** _____ **Notes** _____

**Pre-designated shelter team assigned** ☐ Yes **Team name** _____ ☐ No

**Current facility floor plans available** ☐ Yes **Location of copies** _____ ☐ No

**International Association of Venue Managers (IAVM) facility** ☐ Yes ☐ No

*Use the Standards for Selection of Hurricane Evacuation Shelters to select hurricane evacuation shelters. In this document, you will find a planning process that involves many factors (e.g. technical information for storm surge and flood mapping). This process requires close coordination with local officials for technical information to make decisions about hurricane shelter suitability. Use the Facility Construction section to assist with determining whether this can be a hurricane evacuation shelter.*

**Shelter can be a hurricane evacuation shelter** ☐ Yes ☐ No **Notes** _____

## Survey Conductors (*List all who participated in the survey*)

| Name | Title | Organization | Phone # |
|---|---|---|---|
| | | | |
| | | | |
| | | | |

## LIMITATIONS OF FACILITY USE

*Check one* ☐ This facility will be available for use at any time during the year ☐ This facility is only available for use during the time periods listed below ☐ This facility is not available for use during the time periods listed below

| | Dates (*mm/dd/yyyy*) | Times (*hh:mm*) | | | Dates (*mm/dd/yyyy*) | Times (*hh:mm*) | |
|---|---|---|---|---|---|---|---|
| **From** | | | ☐ AM ☐ PM | **From** | | | ☐ AM ☐ PM |
| **To** | | | ☐ AM ☐ PM | **To** | | | ☐ AM ☐ PM |

**List any recurring dates that the facility is not available** (*e.g. every sunday*) _____

**Areas of the facility that are restricted during use** _____

## FACILITY CONSTRUCTION & SAFETY

### Facility Construction

**Construction material** ☐ Wood ☐ Masonry/Brick ☐ Pre-fab ☐ Bungalow ☐ Concrete ☐ Metal ☐ Trailer ☐ Pod ☐ Other _____

**# stories/ floors** _____ **Notes** _____

**Elevator** ☐ Yes **Location** _____ ☐ No **Notes** _____

**Open roof-spans** (see *Standards for Selection of Hurricane Evacuation Shelters* for current standards) ☐ Yes **Length** _____ ☐ No

**Windows in sleep area** ☐ Yes ☐ No **If yes, shatter protected** ☐ Yes ☐ No **If yes, protected with shutter** ☐ Yes ☐ No

### Fire & AED Safety

*Some facilities may not meet fire codes based on building capacity. The questions below are a general reference. Contact your local fire department with questions or for more information.*

**Fire alarms & systems** (*check all that apply*) ☐ Working smoke detectors ☐ Inspected fire alarm system ☐ Functional sprinkler system ☐ Functional direct fire department alert

**Comments from fire department** _____

**AED(s) on site** ☐ Yes **Location** _____ ☐ No

## Facility Inspection Point of Contact

*If requested, who would inspect this facility post-impact to determine it is safe to occupy?*

**Name** _____ **Title** _____ **Phone #** _____

**24 hour #** _____ **Fax #** _____ **Email** _____

**Contact notes** _____

# SANITATION, FEEDING & UTILITIES

## Sanitation, Utilities & Power

*The recommended ratio for toilet facilities is a minimum of 1 toilet for 20 people. The optimum scenario for showers is 1 shower for every 25 residents. Count all facilities that will be available to shelter residents and staff.*

**Showers available** ☐ Yes **# of showers** _____ ☐ No | **Toilets available** ☐ Yes **# of toilets** _____ ☐ No

*Check all that apply* **Heating** ☐ Electric ☐ Natural Gas ☐ Propane ☐ Fuel Oil | **Cooling** ☐ Electric ☐ Natural Gas ☐ Propane

*Check all that apply* **Cooking** ☐ Electric ☐ Natural Gas ☐ Propane | **Water** ☐ Municipal ☐ Well(s) ☐ Trapped

**Self-sufficient power** ☐ Yes **Type** _____ ☐ No

*Note fuel requirements, generator capacity, facility areas supported by generator(s), and other relevant information.*

**Emergency generator on site** ☐ Yes ☐ No **Notes** _____

## Feeding

**Food Prep** (*check all that apply*) ☐ Warming oven kitchen ☐ Full service ☐ Central kitchen (delivery)

**Food stock stored on site** ☐ Yes **# meal can be served** _____ ☐ No | **Refrigeration units on site** ☐ Yes **# units** _____ ☐ No

**Seating capacity** ☐ Cafeteria _____ ☐ Snack Bar _____ ☐ Other indoor seating _____ **Total estimated seating capacity for eating** _____

**Notes on feeding** _____

# ACCESSIBILITY

*See accompanying Shelter Facility Survey-Accessibility Instructions.*

**Facility Construction**

Facility built in 1993 or later, or extensively altered in 1992 or later. ☐ Yes ☐ No

**Parking Areas**

Parking available. ☐ Yes ☐ No

*Answer below if parking is available*

**Accessible parking space(s)** ☐ Yes ☐ No **Notes** _____

**Van accessible parking space(s)** ☐ Yes ☐ No **Notes** _____

**Drop-off/ Loading Area**

Permanent drop-off area/loading zone with marked access aisle <u>or</u> space available to designate as temporary drop-off area/loading zone. ☐ Yes ☐ No

## Facility Entrance

| | |
|---|---|
| Sidewalk connects parking area and any drop-off area to at least one facility entrance. | ☐ Yes ☐ No |
| Route from accessible parking spaces and any drop-off area/loading zone to at least one facility entrance has no steps or curbs without curb cuts. | ☐ Yes ☐ No |
| Where route crosses curb, curb cuts are at least 36" wide. | ☐ Yes ☐ No |
| Automatic doors or doors without knob hardware. | ☐ Yes ☐ No |
| Doorways at least 32" wide when door is open. | ☐ Yes ☐ No |
| Level landings on interior and exterior sides of entry door. | ☐ Yes ☐ No |
| No objects protrude from the side more than four inches into the route to the facility entrance. | ☐ Yes ☐ No |
| If the main facility entrance does not appear to be accessible, another entry is accessible. | ☐ Yes ☐ No |
| A sign identifies the location of the accessible entrance. | ☐ Yes ☐ No |

## Routes to Service Delivery Areas

| | |
|---|---|
| A route without steps is available to access each service delivery area, as well as restrooms and showers <u>or</u> service can be provided in area that can be accessed by route with no steps. | ☐ Yes ☐ No |
| Using a yard stick held horizontally at your waist level, walk from the facility entrance to each service delivery area, as well as restrooms and showers. Except at doorways (which must be only 32" wide), no part of the route is less than 36" wide. | ☐ Yes ☐ No |
| Route has vertical clearance of at least 80". | ☐ Yes ☐ No |
| No objects protrude from the side more than 4" into the routes to the various service delivery areas. | ☐ Yes ☐ No |
| Automatic doors or doors without knob hardware. | ☐ Yes ☐ No |
| Doorways at least 32" wide when door is open along routes to each service. | ☐ Yes ☐ No |
| If a service delivery area is accessible only by elevator, there is back-up power for the elevator(s). | ☐ Yes ☐ No |

## Ramps

| | |
|---|---|
| Ramps are at least 36" wide, have handrails on both sides 34"-38" above the ramp surface, and have level landings at least 60" long. | ☐ Yes ☐ No |
| **If yes, type of ramp** ☐ Fixed ☐ Portable | ☐ Not provided |
| If ramps are longer than 30 feet, a level landing at least 60" long is provided every 30 feet. | ☐ Yes ☐ No |

## Restrooms

| | |
|---|---|
| Area where person in a wheelchair can turn around (60-inch diameter circle or T-shape turn area). | ☐ Yes ☐ No |
| Doorways at least 32" wide when door is open. | ☐ Yes ☐ No |
| Doors without knob hardware. | ☐ Yes ☐ No |
| Toilet seat is 17"-19" high. Flush control is automatic or manual control on the open side of the toilet and no higher than 48". | ☐ Yes ☐ No |
| Toilet's centerline is 16"-18" from the nearest side wall. | ☐ Yes ☐ No |
| Stall at least 60" wide and 56" deep (wall-mounted toilet) or 59" deep for (floor mounted toilet). | ☐ Yes ☐ No |
| Space at least 9" high is provided beneath the front and one side of the stall. | ☐ Yes ☐ No |
| Appropriate grab bars. | ☐ Yes ☐ No |
| Toilet paper dispenser is within 36" of the rear wall. | ☐ Yes ☐ No |
| At least one accessible sink. | ☐ Yes ☐ No |

## Showers

Showers available. ☐ Yes ☐ No

*Answer below if showers are available*

At least one accessible shower stall with appropriate grab bars: ☐ Yes ☐ No

**Stall type** ☐ Transfer stall ☐ Roll-in shower ☐ Not provided

Shower seat 17"-19" high. If in transfer stall, seat is on the wall opposite the shower controls. If in roll-in shower, seat is on wall adjacent to the shower controls. ☐ Yes ☐ No

Hand-held shower spray with ability to mount at 48" (typically via a mount that can be adjusted along a fixed vertical bar), or alternatively a fixed shower head at 48". ☐ Yes ☐ No

Controls do not require tight grasping, pinching or twisting and are mounted 38"-48" high and no more than 18" from the front of the shower. ☐ Yes ☐ No

## Eating areas

At least some tables have tops 28"-34" high and space underneath at least 27" high, 30" wide and 19" deep. ☐ Yes ☐ No

Serving line or counter no higher than 34". ☐ Yes ☐ No

## Assessment

Relevant areas of the facility are accessible to people with disabilities without adjustments. ☐ Yes ☐ No

Facility has at least one accessible entrance and one accessible restroom, and otherwise is capable of being made accessible during a disaster with minor adjustments. ☐ Yes ☐ No

Facility would require extensive adjustments to be accessible during a disaster. ☐ Yes ☐ No

**Adjustments for Accessibility** (*Identify any adjustments or enhancements that should be made to make the relevant areas of the facility accessible during a disaster*) _____

_____

_____

_____

# OTHER CONSIDERATIONS

## Additional Facilities & Space

**Isolated care areas** ☐ Yes ☐ No **Type of area** ☐ Rooms ☐ Shelter area ☐ Separate facility/area | **Shelter registration area** ☐ Yes ☐ No

**Laundry facilities** ☐ Yes ☐ No **# of washers** _____ **# of dryers** _____ **Who can access the laundry facilities** ☐ Shelter workers ☐ Shelter residents

**Special conditions or restrictions for laundry** _____

## Available Materials

*One cot and two blankets per shelter resident is recommended. Note all available materials for shelter use in the notes section.*

**Cots available** ☐ Yes **# of cots** _____ ☐ No **Location** _____

**Blankets available** ☐ Yes **# of blankets** _____ ☐ No **Location** _____

**Children's supplies** (*e.g. cribs & changing table*) ☐ Yes ☐ No | **Chairs & tables available** ☐ Yes **# of chairs** _____ **# of tables** _____ ☐ No

**Notes** _____

## Facility Ownership & Proximity Considerations

Does the entity that plans to manage the shelter own the building? ☐ Yes ☐ No

**If no, is there a current written plan?** ☐ Yes ☐ No

Is this facility within five miles of an evacuation route? ☐ Yes ☐ No

Is this facility within ten miles of a nuclear power plant? ☐ Yes ☐ No

## Groups Associated with the Facility & Training

Facility staff required when using facility? ☐ Yes ☐ No

Paid feeding staff required when using facility? ☐ Yes ☐ No

Church auxiliary required when using facility? ☐ Yes ☐ No

Fire auxiliary required when using facility? ☐ Yes ☐ No

Other required? ☐ Yes ☐ No **Other** _____

Will any of the above groups be trained or experienced in Red Cross shelter operations or support? ☐ Yes ☐ No

**If yes, describe capabilities** _____

Has the facility been trained in Red Cross sheltering (if not Red Cross managed)? ☐ Yes ☐ No

**If yes, describe capabilities** _____

Training requested by facility or group ☐ Yes **# of staff to be trained** _____ ☐ No

## ADDITIONAL NOTES & INFORMATION

## SHELTER FACILITY LOGISTICS DETAIL

**Facility Name:** _____

**Facility Address (include County):** _____

_____

**Name/contact # for Bldg staff:** _____

Does the facility have a standard height loading dock available for our use when the facility is being operated as a shelter? ____Yes ___ No – Lift gate truck required (you must also complete the bottom of the form)

Identify the location of the loading dock and mark it on shelter floor plan:

_____

_____

Is there an entry into the building's interior from the loading dock sufficient to accommodate a standard- sized pallet through the entrance way? _____ Yes _____ No

If no, are carts available to move materials that will be required to be offloaded by hand and transferred into the building's interior? _____ Yes _____ No (please identify type, number and location of carts; and contact person for accessing carts):

_____

_____

Must building staff be available when we access the loading dock? _____ Yes _____ No

Is there a docking plate accessible at the loading dock <u>even when the building staff is not there</u> to enable the drivers to transfer pallets directly from the truck onto the loading dock? _____ Yes _____ No **(Verify whether the weight of the docking plate is such that it can be moved readily by two individuals, or if it will require a forklift to properly position and place the plate between the truck and the loading dock):**

_____)

Is there a forklift and operator available and, if so, how do we arrange contact in advance? ____ Yes ____ No (phone number for contact _____)

Is there a pallet jack available for our use at the loading dock <u>even when the building staff is not available</u>? _____ Yes ____ No (pallet jack must accompany delivery)

IF THERE IS NOT A LOADING DOCK AVAILABLE FOR OUR USE, PLEASE DESCRIBE WHERE AND HOW OFFLOADING OF MATERIALS INTO THE SHELTER WILL TAKE PLACE, AS WELL AS IDENTIFYING ANY EQUIPMENT THAT THE TRANSPORTATION STAFF SHOULD BRING WITH THE SHIPMENT:

_____

_____

_____

_____

_____

# Shelter Facility Survey | Accessibility Instructions

Use these *Accessibility Instructions* to complete the *Shelter Facility Survey*. The survey prompts and questions correspond in order with the instructions below. To complete this accessibility section, you will need the following tools:

1. a metal tape measure that extends at least 20 feet, and
2. a yardstick.

Contact NHQMassCare@usa.redcross.org with any questions of how to complete the accessibility section.

Shelter facilities should be accessible to people with disabilities. Some facilities, particularly facilities built in 1993 or later or extensively altered in 1992 or later, after the Americans with Disabilities Act ("ADA") went into effect, may have few if any barriers to accessibility and are good choices for shelters. Other facilities may have barriers to accessibility which should be identified and removed if possible before the facility is used as a shelter.

## Before completing this section

When evaluating the accessibility of a facility, focus on the parts of a facility that will be used during a sheltering operation: drop-off/parking areas, shelter entrances, service delivery areas and toilets. If these areas have barriers that would prevent access for people with disabilities, including people who use wheelchairs or other mobility devices and people with vision impairments, then the chapter should determine whether the facility owner plans to remove the barriers and/or what temporary adjustments are necessary before opening the facility as a disaster shelter. Plans should be made to address any barriers to access that may exist and the facility owner should be engaged in the planning process if possible. If the facility has barriers that can't be addressed, then a more comprehensive accessibility plan will be needed in order to use the facility as a shelter, or it may be appropriate to choose a different facility.

There are many temporary adjustments that can address barriers to accessibility. Examples include portable ramps, moving furniture and other protruding objects, using traffic cones and signs to create accessible parking spaces, and using signs to direct people to accessible routes. One of the purposes of this survey is to help identify any temporary adjustments that will need to be made if the facility is used as a shelter during a disaster.

The instructions below provide additional information to assist you in completing the accessibility section of the *Shelter Facility Survey*. You should read this information before attempting to complete the survey.

## Parking Areas

Accessible parking spaces must be located on the shortest accessible route to the facility's accessible entrance and have an adjacent, marked access aisle. The parking space and the access aisle should be level and have a firm/stable and slip-resistant surface. The vehicle space must be at least 96" (8 feet) wide. The access aisle for a standard accessible space (i.e., space for cars) must be at least 60" (5 feet) wide and the access aisle for a van accessible space at least 96" (8 feet) wide. Alternatively, "universal parking spaces" with a vehicle space at least 132" (11 feet) wide and an access aisle 60" (5 feet) wide may be provided. Illustrations are provided below:

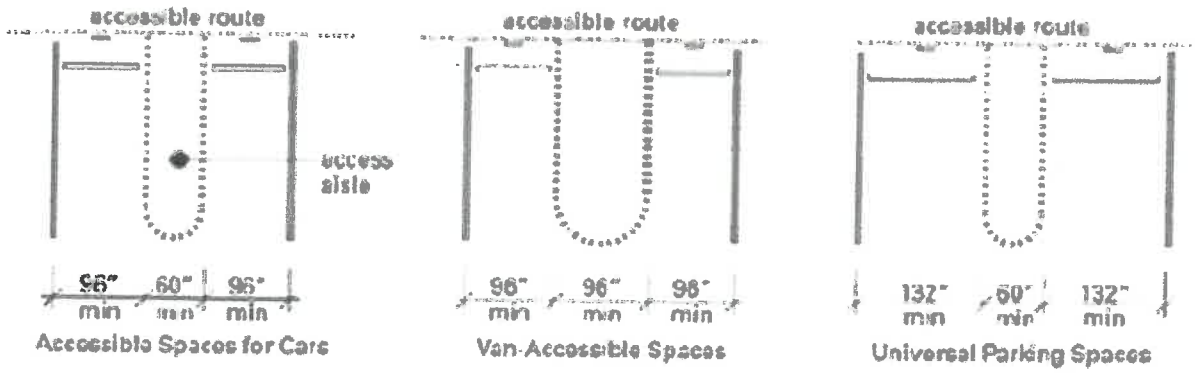


If parking is provided at the facility but it does not have accessible spaces, indicate under "Adjustments for Accessibility" whether temporary accessible spaces can be provided.

## Facility Entrance

When answering the first and second questions, you should consider the entire path from the parking area and any drop-off area to the facility entrance door. If neither parking nor a drop-off area is provided, you should assess whether the route from the sidewalk or street to the facility entrance has steps or curbs without curb cuts.

### Curb Cuts

Curb cuts (also known as curb ramps) must be at least 36" wide, not including the side flares, as illustrated below. While curb cuts typically cut into the curb, a built-up ramp adjoining the curb also is acceptable. Handrails are not required on curb cuts or curb ramps.

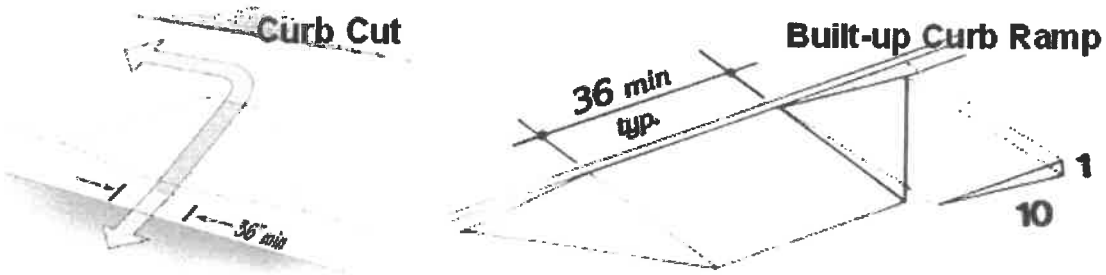


### Door Hardware

Door hardware must be operable by one hand without tight grasping, pinching or twisting of the wrist. The basic test for accessible door hardware is whether it can be operated with an open hand. Knob-type hardware does not meet this test. Permissible types of door hardware include lever or blade-type hardware, U-shaped handles, push bars and pull plates. Automatic doors, whether activated by sensors or manually via push plates, also meet this test.

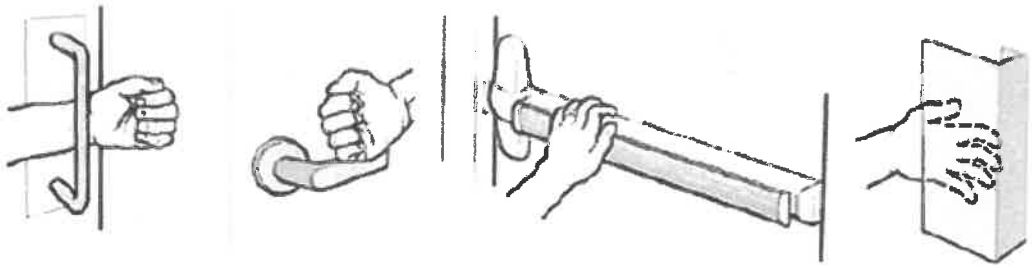

### Doorway Width

A doorway must provide 32" clear width. To measure the clear width of a door, open the door to 90 degrees. Measure from the latch side of the door frame to the face of the door. If the door is a double-leaf door, measure the clear width provided by a single leaf. If the leafs are not the same size, measure the clear width of the larger leaf.

### Door Landings and Maneuvering Clearance

For manually-operated doors, level landings and maneuvering clearances are required on each side of the door to enable individuals with disabilities to open and navigate through the door. The minimum dimensions for these landings differ for the "pull-side" (exterior) and "push-side" (interior) of the door and direction of approach. The dimensions for a forward approach are illustrated below.

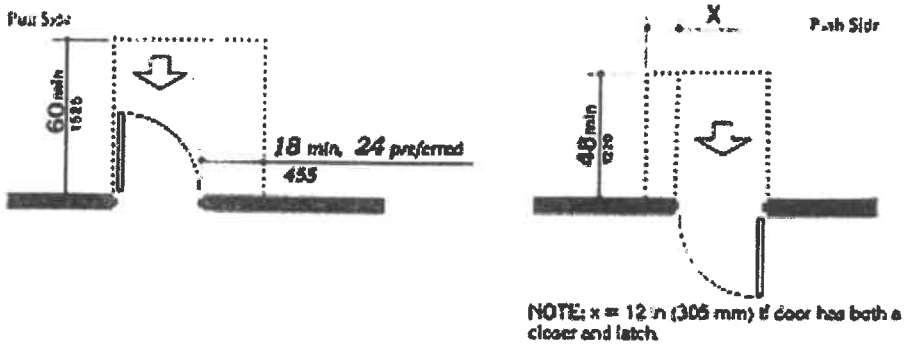

### Protruding Objects

Objects that project from the side into a pedestrian route or that overhang a pedestrian route can present hazards for people who are blind or have low vision. Overhanging objects must be at least 80" above the ground or floor. Objects that project from the side cannot protrude more than 4" into the route if the bottom edge of the object is more than 27" above the ground or floor. Objects with a bottom edge located at or below 27" can protrude any amount.

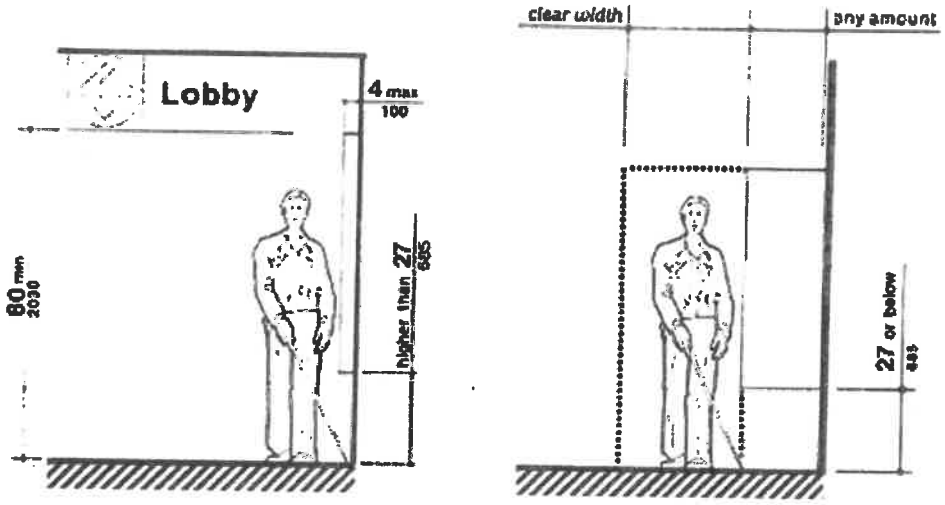


### Alternate Accessible Entrance

If the main entry is not accessible, check to see whether there is another entrance that is accessible according to the "Facility Entrance" section of the Shelter Facility Survey. A sign should be posted at the main entrance directing people to the alternate accessible entrance.

## Routes to Service Delivery Areas

Clients need to be able to get to the parts of the facility where the Red Cross and others are providing services, such as eating and dormitory areas. See the "Facility Entrance" section for instructions on assessing door hardware, doorway width, and door landings.

### Protruding Objects

Like the route to the facility entrance, the routes to the service delivery areas should not have protruding objects. Please see prior instruction on protruding objects. Items to watch for along interior routes include wall-mounted fire-extinguishers and wall-mounted display cases with the bottom more than 27" above the floor, wall sconces and light fixtures that protrude more than 4" from the wall, and open staircases, exit signs, overhead signs or doorways with less than 80" vertical clearance.

## Ramps

To measure the width of the ramp, measure the distance between the ramp's handrails or, if there are no handrails, the width of the ramp surface. Ramps should have handrails on both sides of the ramp unless the ramp is no higher than 6", in which case handrails are not required. To measure the height of the handrails, measure the distance from the surface of the ramp to the top of the handrail's gripping surface. This distance should be 34"-38". Level landings are required at both the top and the bottom of the ramp. The level landing must extend the full width of the ramp and for a distance of 60" (5 feet). If there is a vertical drop-off on either side of the ramp or landing, edge protection must be provided to prevent the wheels of wheelchairs and other mobility devices from dropping off the ramp.

If a ramp is more than 30 feet long, it must have one or more level landings at least 60" long. These landings must be spaced so that no one segment of the ramp is longer than 30 feet (*i.e,* at least every 30 feet). If the ramp changes direction at the landing (*e.g.,* switchback ramps), the landing must be 60" x 60".

## Restrooms

A facility should have at least one accessible restroom. Assess each restroom for accessibility. If any restroom is not accessible, make a note in the "Adjustments for Accessibility" section that a sign should be posted at that restroom to direct people to the nearest accessible restroom.

### Turning Space for Wheelchairs

There should be a turning space within the restroom that satisfies one of the following illustrations:

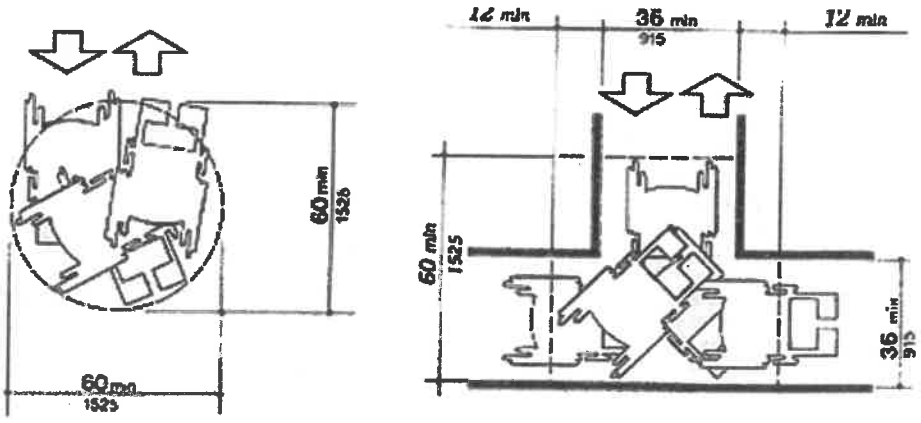


(a)
60-in (1525-mm)-Diameter Space

(b)
T-Shaped Space for 180° Turns

### Accessible Toilet

At least one toilet in a restroom should be accessible. To be accessible, the top of the toilet seat must be between 17"-19" high. The flush control must be located on the open side of the toilet (*i.e.*, not adjacent to the wall) and should be no higher than 48" above the floor, as measured to the top of the control. Automatic flush controls are accessible.

The toilet's centerline should be 16" to 18" from the side wall. The centerline of the toilet will align with the midpoint of the tank, or alternatively, the most forward point of the toilet seat. If the centerline is within this range, you may consider it accessible.

### Accessible Toilet Stall

If toilet stalls are provided in a restroom, at least one stall must be accessible.
The stall itself must be at least 60" wide and 56" deep if the toilet is wall-mounted, or 59" deep if the toilet is floor-mounted. The stall door should be positioned in the corner diagonal from the toilet and open outward. Additionally, space at least 9" high should be provided beneath the front and one side of the stall (*i.e.*, those partitions should <u>not</u> extend clear to the floor).

### Toilet Grab Bars

A rear grab bar at least 36" long must be provided at an accessible toilet and be mounted no more than 6" from the side wall. A side grab bar at least 40" long and mounted no more than 12" from the rear wall also must be provided. To measure the length of the grab bars, measure from the center point of each mounting flange. To measure the height of the grab bars, measure from the floor to the top of the gripping surface. Both grab bars should be mounted between 33"-36" above the floor.

### Accessible Sink

At least one sink in the restroom must be accessible. The illustration below shows an accessible sink. The top surface of the sink can be no higher than 34" above the floor and space at least 27" high must be provided beneath the front apron. "Front apron" refers to the bottom lip at the front of the sink. If the front apron is at least 27" high, you may consider this aspect of the sink accessible. The sink's faucet hardware must be operable with one hand and not require tight grasping, pinching or twisting of the wrist.

*Continued on the next page...*

**Accessible Sink** (continued)
Knob-type hardware is not accessible. Examples of accessible hardware include lever-type, blade-type and push-type hardware. Automatic controls/sensors that activate water flow also are accessible. The sink's drain and water supply pipes should be wrapped or insulated to protect against contact.

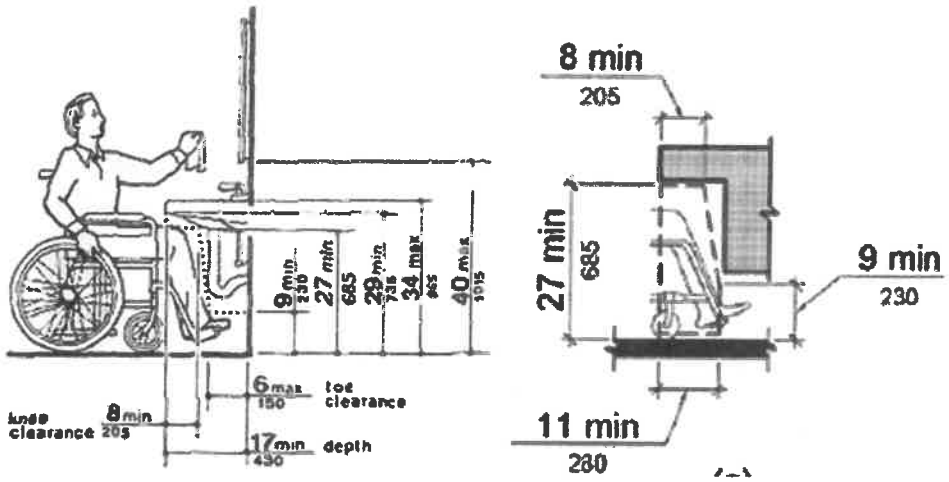


## Showers

If showers are provided to shelter occupants, at least one shower stall must be accessible. The two basic types of accessible shower stalls are transfer stalls, in which a person pulls up to the stall in a wheelchair and transfers to a seat within the stall, and roll-in stalls, in which a person rolls the wheelchair into the stall.

### Dimensions
A transfer stall must be 36" by 36". A roll-in stall is larger: it must be at least 30" by 60". Dimensions should be measured on the inside of the stall.

### Grab bars
Grab bars are required in accessible shower stalls and must be 33"-36" above the floor, as measured to the top of the gripping surface. Generally, grab bars must be provided on all walls except the one behind the seat. Separate, individual grab bars can be provided on each wall, or a single, continuous grab bar can be provided.

### Shower Seat
A shower seat is required in a transfer stall. The seat must be mounted on the wall opposite the controls. Seats are optional for roll-in showers. If a seat is provided in a roll-in shower, it must be positioned next to the controls so that the individual can operate the controls from the seat. The top of a shower seat must be between 17"-19" high.

### Hand-held Shower Spray
An accessible shower must have a shower-spray unit that can be used as a hand-held shower or as a fixed shower head. Typically, the shower-spray unit is attached to a fixed vertical bar with an adjustable mount or bracket (shown in the illustration of shower controls, below). The bottom of the vertical bar should be mounted so that the shower-spray unit can be positioned at 48" above the floor. If the shower has a fixed shower head instead of a hand-held unit, the fixed shower head must be located at 48" above the floor.

### Shower Controls
Shower controls must be operable with one hand and not require tight grasping, pinching or twisting of the wrist (*i.e.,* no knob-type hardware). The controls must be positioned between 38"-48" above the floor and within 18" of the front edge of the stall (for transfer stall and roll-in showers with controls positioned on a side wall). If the controls in a roll-in shower are located on the back wall, they must be within 27" of the side wall.

*Continued on the next page...*

**Shower Controls** (continued)

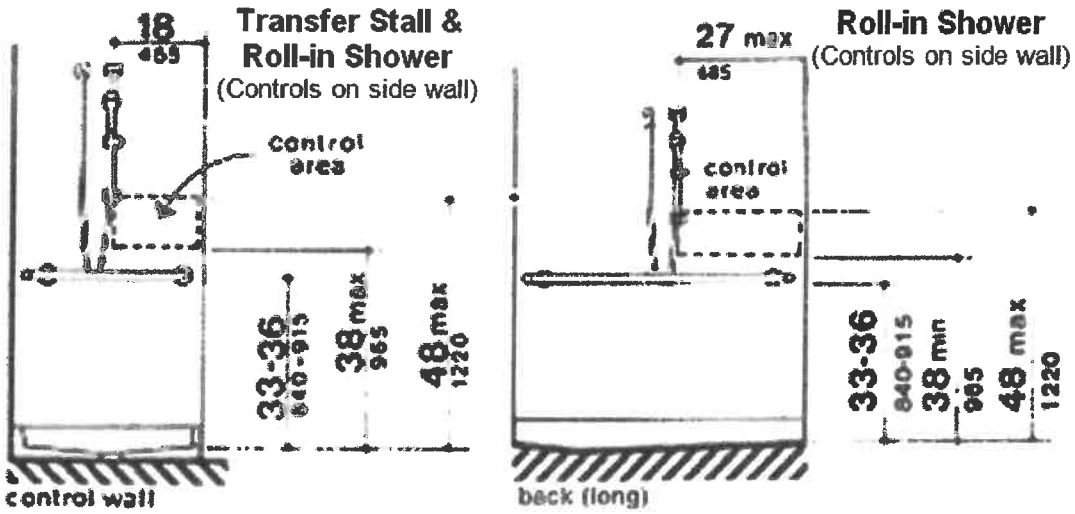


## Eating Areas

To be accessible, a dining table must be 28"-34" high, as measured to the top of the table. An open space (known as "knee clearance") that is 27" high, 30" wide and 19" deep also must be provided beneath the table. Tables with a pedestal base generally are not accessible.

## Assessment

At the end of the survey, you are asked to assess the accessibility of the facility. If all or nearly all of the boxes on the survey are checked yes, you should check the first box, marked "Relevant areas of the facility are accessible to people with disabilities without adjustments." You should check the second box if the facility provides at least one accessible entrance and one accessible restroom, and adjustments can be made to address any items not otherwise checked-off on the survey. If a large number of boxes on the survey are not checked off, you should check the third box, indicating that the facility would require extensive adjustments to be accessible during a disaster.

# Facility Use Agreement Template

(This is a suggested template for important items to include in the facility agreement. Before using this template, local governments should consult with their administrative and legal advisors, and modify the document to comply with their local requirements.)

This agreement is between _[enter name of County or Municipality]____ ("Shelter Operator") and a facility owner ("Owner") to enable Shelter Operator to operate an emergency shelter in areas of the facility(ies) identified below before, during and/or after an incident. Shelter Operator and Owner shall be known collectively as "the parties."

WHEREAS, Shelter Operator is engaged in emergency management preparedness and planning efforts on behalf of its residents and visitors, and

WHEREAS, Shelter Operator seeks to identify and establish agreements with various facilities in which emergency sheltering operations may be conducted for the benefit of residents and visitors, and

WHEREAS, Owner desires to make all or a portion of the identified facility(ies) available for use as an emergency shelter by Shelter Operator before, during or after an incident, and

WHEREAS, the parties have participated in a survey of the Facility and have identified the areas that may be subject to use as a shelter, as well as identifying the maximum safe occupancy, and

WHEREAS, the parties wish to identify all financial and legal obligations in connection therewith,

NOW THEREFORE, in consideration of the mutual promises and representations set forth in this agreement, the parties agree as follows:

## Parties and Facility

**Owner:**

| | |
|---|---|
| Full Name of Owner | |
| Address | |
| 24-Hour Point of Contact<br>Name and Title<br>Work Phone<br>Cell Phone | |
| Address for Official Notices (only if different from above address) | |

**Shelter Operator:**

| | |
|---|---|
| County/Municipality | |
| 24-Hour Point of Contact<br>Name and Title<br>Work Phone<br>Cell Phone | |
| Address for Official Notices | |

# Facility Use Agreement Template

(This is a suggested template for important items to include in the facility agreement. Before using this template, local governments should consult with their administrative and legal advisors, and modify the document to comply with their local requirements.)

**Facility:**

| Insert name and complete street address of building or, if multiple buildings, write "See attached facility list," and attach facility list, including complete street address of each building that is part of this agreement. If this agreement applies to only a portion of a building, then describe the applicable areas. |
|---|
| |

## Terms and Conditions

1) Use of Facility: Upon request and if feasible, Owner will permit Shelter Operator to use and occupy the Facility on a temporary basis to conduct emergency, incident-related activities. The Facility may be used for the following purposes (both parties must initial all that apply):

| Facility Purpose | Owner Initials | Shelter Operator Initials |
|---|---|---|
| Service Center (Operations, Client Services, or Volunteer Intake) | | |
| Storage of supplies | | |
| Parking of vehicles | | |
| Emergency sheltering for humans (including their service animals, if applicable) | | |
| Emergency sheltering for animals | | |

2) Restrictions: Owner represents that the Facility may not generally be available during the following times or events, unless Owner desires to make the Facility available at Owner's sole discretion:

| |
|---|
| |

3) Facility Management: Shelter Operator will designate an individual to manage the activities at the Facility ("Shelter Manager"). The Owner will designate a Facility Coordinator to coordinate with the Shelter Manager regarding the use of the Facility by Shelter Operator.

4) Condition of Facility: The Facility Coordinator and Shelter Manager (or designee) will jointly conduct a survey of the Facility before it is made available to the Shelter Operator, using forms designated by the County/Muncipality to record any existing damage or conditions. The Facility Coordinator will identify and secure all equipment in the Facility that may not be used. Shelter Operator will exercise reasonable care while using the Facility and will not modify the Facility without the Owner's express written approval.

5) Food Services: Upon request by the Shelter Operator, and if such resources are available, the Owner will make the food service resources of the Facility, including food, supplies, equipment and food service workers, available to feed the shelter occupants. The Facility Coordinator will designate a Food Service Manager to coordinate meals at the direction of and in cooperation with the Shelter Manager. The Food Service Manager will establish a feeding

(This is a suggested template for important items to include in the facility agreement. Before using this template, local governments should consult with their administrative and legal advisors, and modify the document to comply with their local requirements.)

schedule and supervise meal planning and preparation. The Food Service Manager and Shelter Manager will jointly conduct a pre-occupancy inventory of the food and food service supplies as part of the pre-occupancy inspection. When Shelter Operator vacates the Facility, the Shelter Manager (or designee) and Facility Coordinator or Food Service Manager will conduct a post-occupancy inventory of the food and supplies used during the Shelter Operator's activities at the Facility. In the event that Owner is unable to support provision of food and/or food service workers to feed shelter occupants, Owner authorizes Shelter Operator to utilize Facility and equipment to coordinate the feeding of shelter occupants through other means, including a third party.

6) Custodial Services: Upon request of the Shelter Operator, and if such resources are available, the Owner will make its custodial resources, including supplies and workers, available to provide cleaning and sanitation services at the Facility, said costs to be reimbursed as provided in Paragraph ___. The Facility Coordinator will designate a Facility Custodian to coordinate the these services at the direction of and in cooperation with the Shelter Manager.

7) Security/Safety: The Shelter Operator shall be responsible for coordinating security and traffic control for the Facility, and shall ensure that staff, volunteers and shelter residents are not able to access any areas of the Facility not covered by this Agreement. The Shelter Manager, as he or she deems necessary and appropriate, will coordinate with law enforcement regarding any security and safety issues at the Facility, and will advise the Facility Coordinator regarding any incidents that occur and any measures taken.

8) Signage and Publicity: The Shelter Operator may post temporary signage identifying the Facility as a site of shelter operations in locations approved by the Facility Coordinator. Shelter Operator will remove such signage at the conclusion of its activities at the Facility.

9) Closing the Facility: Shelter Operator will notify the Facility Coordinator of the date when Shelter Operator will vacate the Facility. Shelter Operator shall be responsible for ensuring that the Facility is returned to its pre-shelter condition, all waste is disposed of, and all areas used for shelter services have been cleared of shelter equipment, supplies and personal belongings. Before Shelter Operator vacates the Facility, the Shelter Manager (or designee) and Facility Coordinator will jointly conduct a post-occupancy inspection, using forms designated by the Shelter Operator to record any damage or conditions.

10) Fees: Both parties must initial one of the two statements below:

a. Owner will not charge a fee for the use of the Facility.

Owner initials: _____ Shelter Operator initials: _____

b. Shelter Operator will pay $_____ per day/week/month (circle one) for the right to use and occupy the Facility.

Owner initials: _____ Shelter Operator initials: _____

11) Damages and cost reimbursement:

a. *Damage to the Facility or other property of Owner, reasonable wear and tear excepted, resulting from the operations by the Shelter Operator.* Reimbursement for facility damage will be based on replacement at actual cash value following standard bid practices. Shelter Operator is not responsible for storm damage or other damage caused by the disaster.

b. *Reasonable costs associated with custodial and food service personnel and supplies which would not have been incurred but for the Shelter Operator's use of the Facility.* Reimbursement of costs associated with the Owner's personnel will be at per-hour, straight-time rate for wages actually incurred but will not reimburse for (i) overtime or (ii) costs of salaried staff unless these costs would be reimbursable as described in 11.f.

c. *Reasonable costs associated with the clean-up and restoration or return of the Facility to its regular use which would not have been incurred but for the Shelter Operator's use of the Facility.* Costs include cleaning, sanitizing and extermination, as well as minor repairs and restoration. Owner shall not incur any such expenses prior to discussion with the Shelter Manager.

d. *Reasonable, actual, out-of-pocket costs for the utilities indicated below, to the extent that such costs would not have been incurred but for the Shelter Operator's use of the Facility.* (Both parties must initial all utilities that may be reimbursed):

(This is a suggested template for important items to include in the facility agreement. Before using this template, local governments should consult with their administrative and legal advisors, and modify the document to comply with their local requirements.)

| | Owner Initials | Shelter Operator Initials |
|---|---|---|
| Water | | |
| Gas | | |
| Electricity | | |
| Waste Disposal | | |

e. The Owner will submit any request for reimbursement to the Shelter Operator within 60 days after the cessation of use by the Shelter Operator. Any request for reimbursement must be accompanied by supporting invoices. Any request for reimbursement for personnel costs must be accompanied by a list of the personnel with the dates and hours worked.

f. If the disaster is a Federally-declared disaster and Owner is a municipal or state government entity, then the Owner will work with appropriate emergency management agencies to seek cost reimbursement through the Federal Emergency Management Agency's program for administering Public Assistance Category B under the Robert T. Stafford Act.

12) Insurance: Shelter Operator shall provide proof of adequate insurance coverage for Commercial General Liability and Automobile Liability, as well as Workers' Compensation coverage with statutory limits for the jurisdiction within which the facility is located. The Parties hereto acknowledge that neither maintains any insurance coverage for the benefit of the other Party or its personnel, consultants, or other associates.

13) Indemnification: The Shelter Operator shall defend, hold harmless, and indemnify Owner against any legal liability, including reasonable attorney fees, in respect to claims for bodily injury, death, and property damage arising from the negligence of the Shelter Operator during the use of the Facility.

a. Each Party hereto shall be responsible for their own personnel and equipment, except as may be otherwise expressly provided in this Agreement.

b. Both Parties agree and acknowledge that neither is an employee of the other.

14) Term: The term of this agreement begins on the date of the last signature below of the authorized representative for each party, and ends 30 days after written notice by either party.

# Facility Use Agreement Template

(This is a suggested template for important items to include in the facility agreement. Before using this template, local governments should consult with their administrative and legal advisors, and modify the document to comply with their local requirements.)

Owner:

_____
Owner (Legal Name)

_____
By (Signature)

_____
Name (Printed)

_____
Title

_____
Date

Shelter Operator

_____
(Legal Name)

_____
By (Signature)

_____
Name (Printed)

_____
Title

_____
Date

Use this document for the walk thru by facility owner and shelter operator before opening the shelter

Name of Facility_____ Address_____

Name of Facility Representative_____ Phone #_____

## Opening Inspection

*Check yes, no, not applicable (NA) or unknown (U). Note specific areas needing correction and those responsible for making the the corrections in the "Comments" cloumn. Take pictures of pre-existing damages and attach them to this document.*

| Yes | No | NA | U | Comments | Areas to Inspect |
|---|---|---|---|---|---|
| ☐ | ☐ | ☐ | ☐ | | Are indoor and outdoor walking surfaces free of trip and fall hazards (e.g. uneven sidewalks, unprotected walkways, loose/missing tiles, wires, etc.)? |
| ☐ | ☐ | ☐ | ☐ | | Are the routes to exits relatively straight and clear of obstructions (e.g. blocked, chained, obstructed)? |
| ☐ | ☐ | ☐ | ☐ | | Are all emergency exits properly identified and secured, and there are at least two exits per floor? |
| ☐ | ☐ | ☐ | ☐ | | Are illuminated exit and exit directional signs visible from all aisles? |
| ☐ | ☐ | ☐ | ☐ | | Are all kitchen equipment and bathroom fixtures in working order? |
| ☐ | ☐ | ☐ | ☐ | | Is there an emergency evacuation plan posted and an identified meeting place? |
| ☐ | ☐ | ☐ | ☐ | | Are there guidelines for directing occupants to an identified assembly area away from the building once they reach the ground floor? |
| ☐ | ☐ | ☐ | ☐ | | Are there any site specific hazards (e.g. hazardous chemicals and machinery)? If so, describe them. |
| ☐ | ☐ | ☐ | ☐ | | Is the facility neat, clean and orderly? |
| ☐ | ☐ | ☐ | ☐ | | Are the following utility systems in good working order: electricity, water, sewage system, HVAC? |
| ☐ | ☐ | ☐ | ☐ | | Are fire extinguishers and smoke detectors present, inspected and properly serviced with current inspection tags? |
| ☐ | ☐ | ☐ | ☐ | | If power fails, is automatic emergency lighting available for exit routes, stairs and restrooms? |
| ☐ | ☐ | ☐ | ☐ | | Is there a back-up power source? |
| ☐ | ☐ | ☐ | ☐ | | Are first aid kits readily available and fully stocked? Where are they located? |
| ☐ | ☐ | ☐ | ☐ | | Will occupants of the building be notified that an emergency evacuation is necessary by a public address system or alarm? |
| ☐ | ☐ | ☐ | ☐ | | Are floors and walls free of damage? |
| ☐ | ☐ | ☐ | ☐ | | Is the parking area free of damage? |
| ☐ | ☐ | ☐ | ☐ | | Are there accessible parking spaces? |
| ☐ | ☐ | ☐ | ☐ | | Is there at least one entrance to the building accessible for people with mobility issues with signage identifying the location of the accessible entrance? |
| ☐ | ☐ | ☐ | ☐ | | Is there at least one accessible restroom? |
| ☐ | ☐ | ☐ | ☐ | | Are there routes without steps available to access service delivery areas, restrooms and showers? Can service be provided in an area that can be accessed by routes without steps? |

Any damage or additional comments (attach additional pages if more room is needed):

_____

_____

_____

_____

_____

_____

_____

_____

Date of Facility Opening Inspection: _____ Start Date for Use of Facility: _____

Shelter Operator
Printed Name & Title_____ Signature _____ Date_____

Facility Rep/Operator
Printed Name & Title_____ Signature _____ Date_____

Use this document for the walk thru by facility owner and shelter operator after the shelter is closed.

Name of Facility_____ Address_____

Name of Facility Representative_____ Phone #_____

## Closing Inspection

*Note specific areas needing correction due to use of the facility and those responsible for making the the corrections below. Take pictures of all listed damages and attach them to this document.*

Date of Facility Closing inspection: _____ End date of use of Facility: _____

The Facility is being returned to the Owner in satisfactory condition less any damages noted above.

Shelter Operator
Printed Name & Title_____ Signature _____ Date_____

Facility Rep/Operator
Printed Name & Title_____ Signature _____ Date_____

# General Site Inspection (All Sites) Checklist

Use this checklist to assess a facility to support a disaster operation. This checklist can be used to assess any facility.

| Task | Complete Yes/No | Comments |
|---|---|---|
| Complete a written inspection of the site and any associated facilities. | | |
| Complete a *Facility/Shelter Opening and Closing Inspection Form*. | | |
| Required utilities are functioning. | | |
| Are there any scheduling conflicts with the organization that owns the facility? | | |
| Is the parking lot rutting or cracking as to present a trip hazard? Is it in sufficient condition to allow use of material handling equipment such as hand trucks? | | |
| Is there any damage to landscaping, fencing or exterior signage? | | |
| Do the plumbing and electrical systems either meet or can be easily modified to meet the service delivery requirements? | | |
| If the site is found to be satisfactory, has Facilities Management signed a formal agreement authorizing use of the site for a field kitchen during the relief operatio? If this is prior to an operation, the region is responsible for accomplishing this task. | | |
| Does adequate security exist? | | |
| Coordinate with Disaster Service Technology for IT/telecom support (phones, laptops, connectivity, etc.) | | |
| At least 50 feet of space for sanitary placement of portable toilets within a safe distance from the kitchen site is provided. | | |

| Task | Complete Yes/No | Comments |
|---|---|---|
| At least ten feet of electrical drop and/or space between generators, and 50 feet distance for maintenance/fueling, as required. | | |
| Is there damage to the exterior of the building including roof, siding, windows and entrances? | | |
| Note damage to the interior including flooring, carpeting, ceiling, walls, doors, and interior trim. | | |
| Appliances and bathroom fixtures functional and undamaged. | | |
| Note condition of the plumbing and electrical systems. | | |
| Note condition of the heating and cooling systems. | | |
| Note outside phone line trunk(s). | | |
| Note internet connectivity. | | |
| Existing damage has been photographed. | | |

**Disaster Operations Headquarters Checklist**

| Suggested Requirements | Y/N | Comments |
|---|---|---|
| 10,000 – 15,000 square feet of open space (no divided office space layout) | | |
| Strategic location proximate to populations at risk for known or potential disaster impact; | | |
| 24 hour, 7 day accessibility; | | |
| A strategic location accessible to major highways, airports, rail centers and proximate to our clients; | | |
| Restrooms and the availability of water on site; | | |
| Have sufficient parking for staff and communication vehicles (100 car parking spaces, seven truck parking spaces for 26 foot trucks); | | |
| Secure area for inventory and 150 square feet lockable room; | | |
| Sufficient power to support the operations headquarters (150 computers, three fax machines, and three copiers); | | |
| Lighting is adequate | | |
| Climate controlled (air conditioning and heating with separate control within the space) | | |
| Accessible to individuals with access and functional needs, including those with disabilities (reasonable accommodations) | | |
| Must have building owner's permission for installation of communication/satellite equipment. | | |

**Service Delivery Checklist**

| Suggested Requirements | Yes/No | Comments |
|---|---|---|
| Size of facility 3,000 – 5,000 square feet | | |
| Worker support areas | | |
| Climate control | | |
| Adequate lighting | | |
| Adequate worker and client parking; | | |
| Client waiting area with seating and play area for children | | |
| Separate client toilet facilities, if possible | | |
| A secure area to provide client snacks and to distribute cleanup kits, comfort kits, and other in-kind items | | |
| Accessible to individuals with access and functional needs, including those with disabilities (reasonable accommodations) | | |

**Warehouse Checklist**

| Suggest Requirements | Yes/No | Comments |
|---|---|---|
| Size of facility (without pallet racking):<br>❑ 20,000 – 50,000 square feet for a level 4 relief operation;<br>❑ 100,000 – 150,00 square feet for a level5 and above | | |
| Location accessible to major highways, airports and rail centers | | |
| 24 hour, 7 day accessibility for rapid activation and movement of supplies | | |
| Conventional loading docks (minimum of two, which can be used by up to 52 foot trailers); | | |
| Restrooms and the availability of water on site | | |
| Electrical and telephone services on site | | |
| A place for charging forklift batteries with electric supply 240V(or adequate electrical supply) | | |
| Adequate lighting | | |
| Fire safety equipment | | |
| Available parking for:<br>❑ At least five tractor trailers 48 foot and 52 foot;<br>❑ At least ten passenger cars/vans | | |
| Concrete floor capable of supporting a forklift. | | |

| Suggest Requirements | Yes/No | Comments |
|---|---|---|
| Office and worker support areas (Not Essential) | | |
| Separate areas for outgoing and incoming with loading dock for each area (Not Essential) | | |
| Ramps (Not Essential) | | |

**Point of Distribution Site Checklist**

Size and locations determined on distribution planned

- ❑ Mass Care must define the Type of Point of Distribution to determine the space required. For distribution to vehicles:
  - ❑ A Point of Distribution serving 20,000 people per day requires a space approximately 250 feet by 500 feet;
  - ❑ A Point of Distribution serving 10,000 people per day requires a space approximately 250 feet by 300 feet;
  - ❑ A Point of Distribution serving 5,000 peopleper day requires a space approximately 150 feet by 300 feet;
  - ❑ If the site is solely for emergency response vehicle deployment, the location is sized to the level of vehicle activity.

| Suggestions | Yes/No | Comments |
|---|---|---|
| Must be accessible to individuals with access and functional needs. | | |
| Location of the distribution point should not significantly impact surrounding traffic. | | |
| If the site will handle foot traffic it should be located away from congested street crossings. | | |
| Worker support areas: toilets should be accessible to individuals with access and functional needs, including those with disabilities, and separately available for men and women. | | |
| Parking requirements: accommodate vehicle weights and support trailers (48 feet -53 feet) | | |
| Large trucks can enter and exit without assistance, and there are no turns or obstacles within the site that make maneuvering difficult. | | |
| Driveways and parking surfaces must be able to accommodate heavy vehicle weights and support trailer jack stands with wide reinforced bases. | | |
| Secure parking for vehicles awaiting re-deployment trailers storing materials and site equipment. | | |

**Mass Care Fixed Kitchen Site Checklist**

The numbers below account for one day; multiply numbers as necessary if space is needed for more than one day. For preparing 10,000 meals per day, give consideration to the following:

| Suggestions | Yes/No | Comments |
|---|---|---|
| Food production space | | |
| Dry storage space (630 square feet or more); | | |
| Refrigerated storage space (height of 8 feet and 313 square feet or more); | | |
| Adequate parking and loading space for ten emergency response vehicles. | | |
| The roadways and parking surfaces need to support heavy axle weights and heavy traffic. | | |
| If trailers and reefers are utilitzed, place a wide base of support under the trailer jackstands. | | |

**Mobile Kitchen Site Identification Checklist**

| Suggestions | Yes/No | Comments |
|---|---|---|
| Proximity to the disaster area. | | |
| Adequate parking for the mobile kitchen, 10 ERVs, trailers (dry box and reefer), cambro washing area, client and staff. | | |
| The roadway and parking surfaces must be able to support heavy axle weights and heavy traffic. | | |
| Has adequate water, sanitation and drainage systems. | | |
| Connections for city water, city sewer, | | |
| Telephone hard lines and, if possible, a connection for land-line power. | | |
| Adequately protected storm drains | | |
| The facility is available without requiring extensive modifications (such as re-stringing power lines, repairs to plumbing or sewers, or building repairs.) | | |
| Space of 40 feet x 48 feet per wooden pallet for potable water storage and bulk water, as required; | | |
| Gray Water disposal plan identified | | |
| Evaluate necessity for Portable Lighting System(s) | | |

| Suggest Requirements | Yes/No | Comments |
|---|---|---|
| Space for material handling equipment: forklift(s), pallet jack(s), hand trucks | | |
| Hand Wash Stations | | |
| Wall tent/canopy | | |
| Dumpster(s); | | |
| Space for small trash barrels, recycling bins and service | | |
| Cambro cleaning area | | |

## Shelter Supply Template Instructions

This optional tool outlines the material resources needed to operate a shelter. This is NOT a tool to be used for readiness activities.

This job tool is used in conjunction with the following American Red Cross doctrine:

- Sheltering Standards and Procedures
- Job Tool: Operating a Shelter

This template is based on a **100 person shelter** for **3 days**. The demographic assumptions below are based on US Census and Centers for Disease Control and Prevention (CDC) data for determining products and quantities in this template.

- 3.25% of shelter population is under 2 years old.
- 6.5% of shelter population is under 5 years old.
- 50% of shelter population is female.
- 12.5% of shelter population is menstruating (25% of the female population).
- 30% of shelter population is obese.
- 30% of shelter population has an access or functional need or disability.

**Item Categorization**

- Administrative
- Childcare
- Communications and technology
- Dormitory
- Facility
- Feeding
- Personal Care
- Sanitation
- Signage
- Staffing
- Tools

**Priority of Need**

Priorities listed in this table are generic and apply to most shelters. Actual priority could vary depending on the needs of the shelter population. For example, if there are infants in the shelter, infant formula will become a critical item (A) for that client.

- **A** - Items that are critical for accomplishing sheltering activities.
- **B** - Items that are important and support sheltering activities.
- **C** - Items that sheltering operations could do without for an extended period of time without any direct impact to the mission.

* Quantity of items needed is dependent on the configuration of the item's unit of measure

# Shelter Supply Template

| TYPE | ITEM | PURPOSE | CAT. | UNIT | QUANT. | PER PERSON / PER SHELTER | Vender Main | Vender Back-Up |
|---|---|---|---|---|---|---|---|---|
| Admin | **30-quart Plastic Storage Tub** | To store paperwork and admin | B | Ea | 5 | Per shelter | | |
| Admin | **Local City and County Maps / Phone Book** | To use during a communication outage | B | Ea | 1 | Per shelter | | |
| Admin | **Folding Table** | To use for initial setup of reception, registration, information, and direct conversations with clients | A | Ea | 4 | Per shelter | | |
| Admin | **Chairs** | To use for initial setup of reception, registration, information, and direct conversations with clients | A | Ea | 10 | Per shelter | | |
| Admin | **Mechanical Pencils** | To use for paperwork and organization | B | N/A | * | Per shelter | | |
| Admin | **Pens (variety)** | To use for paperwork and organization | A | N/A | * | Per shelter | | |
| Admin | **Permanent Markers** | To use for paperwork and organization | B | N/A | * | Per shelter | | |
| Admin | **Markers** | To use for paperwork and organization | C | Box | 1 | Per shelter | | |
| Admin | **Highlighters** | To use for paperwork and organization | C | N/A | * | Per shelter | | |

Note: Template is based on a 100 person shelter for 3 days

| | | | | | | | | |
|---|---|---|---|---|---|---|---|---|
| Admin | **Thumb Tacks** | To use for paperwork and organization | C | N/A | * | Per shelter | | |
| Admin | **Safety Pins** | To use for paperwork and organization | C | N/A | * | Per shelter | | |
| Admin | **Tape - Painters** | To use for paperwork and organization | B | Roll | 1 | Per shelter | | |
| Admin | **Tape - Transparent** | To use for paperwork and organization | B | Roll | 1 | Per shelter | | |
| Admin | **Rubber Bands** | To use for paperwork and organization | C | N/A | * | Per shelter | | |
| Admin | **3-hole Punch** | To use for paperwork and organization | C | Ea | 1 | Per shelter | | |
| Admin | **Scissors** | To use for paperwork and organization | B | Ea | 2 | Per shelter | | |
| Admin | **Stapler** | To use for paperwork and organization | B | Ea | 2 | Per shelter | | |
| Admin | **Staples** | To use for paperwork and organization | B | N/A | * | Per shelter | | |
| Admin | **Staple Remover** | To use for paperwork and organization | C | Ea | 1 | Per shelter | | |
| Admin | **Calculator** | To use for paperwork and organization | C | Ea | 1 | Per shelter | | |
| Admin | **Post-it Notes, Large** | To use for organization | B | N/A | * | Per shelter | | |
| Admin | **Post-it Notes, Medium** | To use for organization | B | N/A | * | Per shelter | | |
| Admin | **Writing Pads** | To use for paperwork and organization | A | Ea | 2 | Per shelter | | |

Note: Template is based on a 100 person shelter for 3 days

| | | | | | | | | |
|---|---|---|---|---|---|---|---|---|
| Admin | **Easel Paper Pad/Newsprint** | To use for creating signage and information | B | Ea | 1 | Per shelter | | |
| Admin | **Index Cards** | To use for paperwork and organization | B | N/A | * | Per shelter | | |
| Admin | **Clipboards** | To use for paperwork and organization | A | Ea | 2 | Per shelter | | |
| Admin | **Paper Clips** | To use for paperwork and organization | B | Box | 1 | Per shelter | | |
| Admin | **Accordion Folders** | To use for paperwork and organization | B | Ea | 1 | Per shelter | | |
| Admin | **Binder, Red** | To use for paperwork and organization | B | Ea | 1 | Per shelter | | |
| Child Care | **Baby Diapers - Small** | To ensure that infants have proper hygiene products | A | N/A | * | Per shelter | | |
| Child Care | **Baby Diapers - Large** | To ensure that infants have proper hygiene products | A | N/A | * | Per shelter | | |
| Child Care | **Pull Ups - Girls** | To ensure that toddlers have proper hygiene | A | N/A | * | Per shelter | | |
| Child Care | **Pull Ups - Boys** | To ensure that toddlers have proper hygiene | A | N/A | * | Per shelter | | |
| Child Care | **Baby Wipes** | To ensure that infants have proper hygiene products | B | N/A | * | Per shelter | | |
| Child Care | **Baby Bottles with Nipples** | To ensure that infants have the proper feeding equipment | B | Ea | 3 | Per shelter | | |
| Child Care | **Electrical Receptacle Covers** | To ensure that children do not electrocute themselves | A | N/A | * | Per shelter | | |
| Child Care | **Sip Cups** | To ensure continued independence of toddlers / prevent shelter mess | B | N/A | * | Per shelter | | |
| Child Care | **Toys- Toddler** | To stimulate and occupy children | B | N/A | * | Per shelter | | |

Note: Template is based on a 100 person shelter for 3 days

| | | | | | | | | |
|---|---|---|---|---|---|---|---|---|
| Child Care | **Toys- Age 3-5** | To stimulate and occupy children | B | N/A | * | Per shelter | | |
| Child Care | **Toys- Age 6-10** | To stimulate and occupy children | B | N/A | * | Per shelter | | |
| Child Care | **Toys- Age 10+** | To stimulate and occupy children | B | N/A | * | Per shelter | | |
| Child Care | **Coloring Books** | To stimulate and occupy children | B | Ea | 20 | Per shelter | | |
| Child Care | **Crayons** | To stimulate and occupy children | B | N/A | * | Per shelter | | |
| Child Care | **Portable Crib** | To keep infants/toddlers safe | B | Ea | 2 | Per shelter | | |
| Child Care | **Baby Formula** | To ensure infant population is able to eat | B | N/A | * | Per shelter | | |
| Child Care | **Baby Food** | To ensure toddler population is able to eat | B | N/A | * | Per shelter | | |
| Child Care | **Infant Bathing Basin** | To ensure infant safety when bathing | B | Ea | 1 | Per shelter | | |
| Child Care | **Toddler Potty Seat** | To ensure continued independence of toddlers | B | Ea | 2 | Per shelter | | |
| Child Care | **Breast Pump** | To ensure that mothers are able to maintain pre-disaster feeding routine | B | Ea | 2 | Per shelter | | |
| Child Care | **Nutritional Supplemental Drinks** | To ensure that children are receiving adequate nutrition | B | Box | 1 | Per shelter | | |
| Child Care | **Breast Milk Storage Bags** | To use in conjunction with breast pump | B | Box | 2 | Per shelter | | |
| Comm. & Tech | **AM/FM Weather Radio** | To use when communications systems are down | B | Ea | 1 | Per shelter | | |

Note: Template is based on a 100 person shelter for 3 days

| | | | | | | | | |
|---|---|---|---|---|---|---|---|---|
| Comm. & Tech | **USB Drive with all Updated Documents** | To store all of the most up to date doctrine | A | Ea | 1 | Per shelter | | |
| Comm. & Tech | **Laptop** | To ensure connectivity | B | Ea | 1 | Per shelter | | |
| Comm. & Tech | **Cell Phone** | To ensure connectivity | A | Ea | 1 | Per shelter | | |
| Comm. & Tech | **Ham Radios** | To ensure connectivity | B | Ea | 2 | Per shelter | | |
| Comm. & Tech | **Extension Cords** | To provide connectivity | A | Ea | 10 | Per shelter | | |
| Comm. & Tech | **Power Strips** | To ensure shelter equipment can charge, and so clients are able to charge their electronics | A | Ea | 10 | Per shelter | | |
| Comm. & Tech | **USB Port Strips/Cell Phone Charging Dock** | To enhance connectivity, especially for those that do not have a cell phone charger | B | Ea | 10 | Per shelter | | |
| Dormitory | **Floor Tarp** | To use to cover the dormitory floor and prevent damage to the facility floor | A | N/A | * | Per shelter | | |
| Dormitory | **Cot - Military** | To provide a client with a place to sleep | A | Ea | 70 | Per shelter | | |
| Dormitory | **Cot - Universal** | To provide a client with a place to sleep | A | Ea | 15 | Per shelter | | |
| Dormitory | **Cot - Medical Cot (Inclined Head)** | To provide a client with a place to sleep | A | Ea | 15 | Per shelter | | |
| Dormitory | **Blanket** | To provide to each client to use as a blanket and/or pillow | A | Ea | 2 | Per person | | |
| Dormitory | **Pillow** | To use for comfort on the cot | C | Ea | 1 | Per person | | |

Note: Template is based on a 100 person shelter for 3 days

| | | | | | | | | |
|---|---|---|---|---|---|---|---|---|
| Dormitory | **Towel** | To use for personal hygiene | B | Ea | 1 | Per person | | |
| Dormitory | **Ear Plugs** | To provide to clients for ease of sleeping | C | N/A | * | Per shelter | | |
| Dormitory | **Eye Mask** | To provide to clients for ease of sleeping | C | N/A | * | Per shelter | | |
| Facility | **Tape - Caution** | To use for routing traffic | C | Roll | 1 | Per shelter | | |
| Facility | **Tape - Packaging** | To use to put up outdoor signage | A | Roll | 1 | Per shelter | | |
| Facility | **Tape - Red Duct** | To use when securing electrical cords | B | Roll | 1 | Per shelter | | |
| Feeding | **Drink Cambro** | To use to serve cold and hot beverages | B | Ea | 2 | Per shelter | | |
| Feeding | **Coffee Maker** | To use to make coffee | B | N/A | * | Per shelter | | |
| Feeding | **Non-refrigerated Creamer** | To be made available with the hot beverage | B | Mini packet | 7.5 | Per person | | |
| Feeding | **Sugar** | To be made available with the hot beverage | B | Packet | 2.5 | Per person | | |
| Feeding | **Non-sugar Sweetener** | To be made available with the hot beverage | B | Packet | 5 | Per person | | |
| Feeding | **Food Cambro - Small** | To use to serve food | B | Ea | 10 | Per shelter | | |
| Feeding | **Food Cambro Liner - Small** | To use to protect food quality | B | Ea | 2 | Per shelter | | |
| Feeding | **Danishes** | To provide for breakfast | B | Ea | 2.5 | Per person | | |

Note: Template is based on a 100 person shelter for 3 days

| | | | | | | | | |
|---|---|---|---|---|---|---|---|---|
| Feeding | **Yogurt Cups** | To provide for breakfast | B | Ea | 2.5 | Per person | | |
| Feeding | **Dry Cereal – Individual** | To provide for breakfast | A | Ea | 2.5 | Per person | | |
| Feeding | **Milk** | To provide for breakfast | A | Gal | .16 | Per person | | |
| Feeding | **Salty Snack** | To provide at the 24-hr snack table | A | Ea | 9 | Per person | | |
| Feeding | **Sweet Snack** | To provide at the 24-hr snack table | A | Ea | 9 | Per person | | |
| Feeding | **Fruit** | To provide at the 24-hr snack table | A | Ea | 6 | Per person | | |
| Feeding | **Coffee Grounds** | To provide at the 24-hr snack table | B | Can | .08 | Per person | | |
| Feeding | **Cups - Hot** | To use for drinking hot beverages | B | Ea | 6 | Per person | | |
| Feeding | **Bottled Water** | To provide at the 24-hr snack table | A | Ea | 15 | Per person | | |
| Feeding | **Napkins** | To provide during meal times | B | N/A | * | Per shelter | | |
| Feeding | **Banquet Pack (Spoon, Fork, Knife)** | To use to serve individual meals | A | Ea | 7.5 | Per person | | |
| Feeding | **Clamshells** | To use during meal times | A | N/A | 9 | Per person | | |
| Feeding | **Mini Refrigerator/ Cooler** | A temperature-controlled cooler/refrigerator is necessary to store certain items (milk, etc.). | B | Ea | 1 | Per shelter | | |

Note: Template is based on a 100 person shelter for 3 days

| | | | | | | | | |
|---|---|---|---|---|---|---|---|---|
| Personal Care | **Privacy Screens** | To provide for client privacy | B | Ea | 2 | Per shelter | | |
| Personal Care | **Comfort Kit** | To provide clients with basic hygiene supplies | A | Ea | 1 | Per person | | |
| Personal Care | **Whistle** | To provide to those who might need to call the attention of a shelter worker during steady state or an emergency | B | Ea | 3 | Per shelter | | |
| Personal Care | **Emergency Blankets** | To provide to clients who have come into the shelter due to cold or flooding. While this is also an emergency supply, a distribution site is not always established and/or could take days to set up. | B | Ea | 1 | Per person | | |
| Personal Care | **100-person First Aid Kit** | To use to address basic medical issues at a shelter (scrapes, etc.) | A | Ea | 1 | Per shelter | | |
| Personal Care | **Magnifier** | To provide to clients who are visually impaired to help them read registration paperwork | B | Box | 1 | Per shelter | | |
| Personal Care | **Wheelchair** | To be used by clients with mobility limitations | B | Ea | 3 | Per shelter | | |
| Personal Care | **Portable Lamps** | To use when there is insufficient lighting to maintain safety | B | Ea | 5 | Per shelter | | |
| Personal Care | **Cane** | To be used by clients needing mobility assistance | B | Ea | 3 | Per shelter | | |
| Personal Care | **Walker** | To be used by clients needing mobility assistance | B | Ea | 3 | Per shelter | | |
| Personal Care | **Chair, Shower** | To provide to clients who need mobility assistance in the shower | B | Ea | 1 | Per shelter | | |

Note: Template is based on a 100 person shelter for 3 days

| | | | | | | | | |
|---|---|---|---|---|---|---|---|---|
| Personal Care | **Commode, 3 in 1** | To provide to clients to be used by their cot or in the restroom | B | Ea | 3 | Per shelter | | |
| Personal Care | **Socks with a Grip Bottom** | To provide to mobility-limited clients to prevent slippage | B | N/A | * | Per shelter | | |
| Personal Care | **Bell** | To provide to those who might need to call the attention of a shelter worker during steady state or an emergency | B | Ea | 3 | Per shelter | | |
| Personal Care | **Adult Disposable Briefs - Small/Medium** | To make available to clients with incontinence | A | N/A | * | Per shelter | | |
| Personal Care | **Adult Disposable Briefs - Large/X-Large** | To make available to clients with incontinence | A | N/A | * | Per shelter | | |
| Personal Care | **Sanitary Napkins** | To make available to female clients during menstruation | B | N/A | * | Per shelter | | |
| Personal Care | **Tampons - Regular** | To make available to female clients during menstruation | B | N/A | * | Per shelter | | |
| Personal Care | **Tampons - Super** | To make available to female clients during menstruation | B | N/A | * | Per shelter | | |
| Personal Care | **Fragrance-free Shampoo** | To provide to clients who have a sensitivity to the comfort kit product | B | N/A | * | Per shelter | | |
| Personal Care | **Fragrance-free Body Wash** | To provide to clients who have a sensitivity to the comfort kit product | B | N/A | * | Per shelter | | |
| Personal Care | **Insect Repellant** | To make available to clients in insect-prone environments | B | Ea | 2 | Per shelter | | |
| Personal Care | **Toilet Paper** | To provide in the restroom | A | Roll | .25 | Per person | | |
| Sanitation | **Food Thermometer** | To test products that are outside of the purview of feeding (milk, etc.) | B | Ea | 1 | Per shelter | | |

Note: Template is based on a 100 person shelter for 3 days

| | | | | | | | | |
|---|---|---|---|---|---|---|---|---|
| Sanitation | **Bottle All-purpose Cleaner** | To maintain the general hygiene of the shelter, and to use for first part of cot cleaning | A | Ea | 1 | Per shelter | | |
| Sanitation | **Cot disinfectant** | To use to disinfect cots | A | Box | 1 | Per shelter | | |
| Sanitation | **Gloves – Rubber (Non-latex)** | To wear when cleaning or feeding | A | N/A | * | Per shelter | | |
| Sanitation | **Gloves - Plastic** | To wear when cleaning or feeding | A | N/A | * | Per shelter | | |
| Sanitation | **Trash Bag – Small** | To use for sanitation purposes | B | N/A | * | Per shelter | | |
| Sanitation | **Trash Bag – Large** | To use for sanitation purposes | A | Ea | 1 | Per person | | |
| Sanitation | **Ziploc Bags** | To use to keep office items organized, or make sandwiches/snacks for clients | B | N/A | * | Per shelter | | |
| Sanitation | **CPR Mouth Shields** | First aid | A | Ea | 3 | Per shelter | | |
| Sanitation | **Facial Tissue Box** | To make available in communal areas | B | N/A | * | Per shelter | | |
| Sanitation | **Paper Towels** | To clean spills | A | Roll | 1 | Per shelter | | |
| Sanitation | **Hand Sanitizer - Lg Pump Bottles** | To place in every common area | A | Ea | 5 | Per shelter | | |
| Sanitation | **Hand Sanitizer – Individual** | To provide to clients | B | Ea | 1 | Per person | | |
| Sanitation | **Dish Soap** | To clean spills or dishes | A | Ea | 1 | Per shelter | | |
| Sanitation | **Sponges** | To clean spills | A | N/A | * | Per shelter | | |

Note: Template is based on a 100 person shelter for 3 days

| | | | | | | | | |
|---|---|---|---|---|---|---|---|---|
| Sanitation | **Scrub Brushes** | To use when cleaning cots | B | Ea | 1 | Per shelter | | |
| Sanitation | **Hair Nets** | To ensure food safety (may also be used for beards) | A | N/A | * | Per shelter | | |
| Signage | **Human Trafficking Promotional Materials (Posters, etc.)** | To promote human trafficking awareness. All material costs and shipment are covered by DHS Blue Campaign - https://www.dhs.gov/blue-campaign/resource-catalog | B | N/A | * | Per shelter | | |
| Signage | **Poster Kit** | To ensure that clients are aware of pertinent shelter information | B | Pkg | 1 | Per shelter | | |
| Signage | **Disaster Relief ID Kit** | To ensure that the public can find the shelter | A | Pkg | 1 | Per shelter | | |
| Signage | **Shelter Yard Signs** | To ensure that the public can find the shelter | A | Pkg | 1 | Per shelter | | |
| Signage | **Arrow Signs** | To ensure that the public can find the shelter | A | Pkg | 1 | Per shelter | | |
| Staffing | **P-Card or Mass Care Procurement Card** | To ensure that the shelter manager is able to make purchases | A | Ea | 1 | Per shelter | | |
| Staffing | **Vests** | To identify shelter workforce | A | Ea | 4 | Per shelter | | |
| Staffing | **Name Labels** | To be able to identify volunteers | A | N/A | * | Per shelter | | |
| Tools | **Flashlight – LED** | To use in case of emergency | A | Ea | 5 | Per shelter | | |
| Tools | **Flashlight - Red Gel Lens** | To use in the shelter at night | C | Ea | 2 | Per shelter | | |
| Tools | **Electric Lantern** | To use to illuminate the shelter during a power outage | B | Ea | 2 | Per shelter | | |

Note: Template is based on a 100 person shelter for 3 days

| | | | | | | | | |
|---|---|---|---|---|---|---|---|---|
| Tools | **Storage Box for Tools** | To assist with minor repairs | B | Ea | 1 | Per shelter | | |
| Tools | **Screw Driver – Flat Blade** | To assist with minor repairs | B | Ea | 1 | Per shelter | | |
| Tools | **Screw Driver - Phillips** | To assist with minor repairs | B | Ea | 1 | Per shelter | | |
| Tools | **Pliers** | To assist with minor repairs | B | Ea | 1 | Per shelter | | |
| Tools | **Wrench** | To assist with minor repairs | B | Ea | 1 | Per shelter | | |
| Tools | **Utility Knife** | A multi-purpose tool to assist with opening boxes, packages, etc. | B | Ea | 1 | Per shelter | | |
| Tools | **Tape Measure** | To use when conducting a facility inspection | B | Ea | 1 | Per shelter | | |
| Tools | **Replacement Batteries** | To ensure working equipment | B | N/A | * | Per shelter | | |

Note: Template is based on a 100 person shelter for 3 days

## Mega Shelter Framework for Roles and Responsibility Coordination

| City: | *insert name of city here* | Venue Name: | *insert venue name here* | | | | |
|---|---|---|---|---|---|---|---|
| | **ROLES & RESPONSIBILITIES** | | | **Coordinating Entity** | **Primary Entity** | **Supporting Entity** | **Possible Source** |
| | **Defining components of a mega-shelter:**<br>* Activated by the local, state or federal government<br>* Multi-agency coordination and management<br>* Large, non-conventional sheltering facility, generally used for public assembly such as an arena, convention center or stadium, or fair building | | | | | | |
| | | | | **Management Oversight & responsibility for this function** | **Principle service delivery agency for this function.** | **Assistive role. Has specific capabilities & resources.** | |
| | **Core Tier 1** | **THESE ROLES AND RESPONSIBILITIES ARE REQUIRED FUNCTIONS** | | | | | |
| 1 | **Client Registration** | | *Service coordination and support of the registration process will be required with Traffic and Parking, Security, and Medical Triage.* | | | | |
| 1.01 | | Human Resources: | Security personnel/police | | | | |
| 1.02 | | | Crowd control staff | | | | |
| 1.03 | | | Registration staff | | | | |
| 1.04 | | | Health & needs assessment staff | | | | |
| 1.05 | | | Roving registration staff | | | | |
| 1.06 | | | Interpreters | | | | |
| 1.07 | | | Set-up & tear down labor | | | | |
| 1.08 | | | | | | | |
| 1.09 | | Physical requirements: | Tables & chairs | | | | |
| 1.10 | | | Power | | | | |
| 1.11 | | | Computers | | | | |
| 1.12 | | | Technology requirements - communications and data | | | | |
| 1.13 | | | Trash cans | | | | |
| 1.14 | | | HVAC/fans/heaters | | | | |
| 1.15 | | | Barricade/rope & stanchion | | | | |
| 1.16 | | | Signage | | | | |
| 1.17 | | | Megaphones | | | | |
| 1.18 | | | Water/snacks | | | | |
| 1.19 | | | Portable Toilets | | | | |
| 1.20 | | | Hygiene and personal cleanup system (for pre shelter entry) | | | | |
| 1.21 | | | | | | | |

## Mega Shelter Framework for Roles and Responsibility Coordination

| City: | *insert name of city here* | Venue Name: | *insert venue name here* | | | | |
|---|---|---|---|---|---|---|---|
| | **ROLES & RESPONSIBILITIES** | | | **Coordinating Entity** | **Primary Entity** | **Supporting Entity** | **Possible Source** |
| 2.00 | **Facility Management** | | | | | | |
| 2.01 | | Human Resources: | Facility Manager | | | | |
| 2.02 | | | Operations staff | | | | |
| 2.03 | | | Record/log keeping staff | | | | |
| 2.04 | | | Financial record keepers | | | | |
| 2.05 | | | General labor | | | | |
| 2.06 | | | Adminstrative staff - contracts | | | | |
| 2.07 | | | Translation & language assessment resources | | | | |
| 2.08 | | | Code compliance - fire & safety, public health | | | | |
| 2.09 | | | | | | | |
| 2.10 | | Physical Resources: | Forklifts, pallet jacks, hand trucks | | | | |
| 2.11 | | | Keys | | | | |
| 2.12 | | | Fuel for equipment | | | | |
| 2.13 | | | Tables and chairs, etc. | | | | |
| 2.14 | | | Signage | | | | |
| 2.15 | | | | | | | |
| 3 | **Security & Building Access Control** | | *Security and building access control is active and involved in many actives for mega sheltering operations. For example, there is an entry search process needed at registration that is provided under this function* | | | | |
| 3.01 | | Human Resources: | Exterior perimeter control | | | | |
| 3.02 | | | Access control - searchers | | | | |
| 3.03 | | | Interior security | | | | |
| 3.04 | | | Control Points and entries | | | | |
| 3.05 | | | Sensitive areas | | | | |
| 3.06 | | | Patrols | | | | |
| 3.07 | | | Greeters at Perimeter entry | | | | |
| 3.08 | | | Service entrances | | | | |
| 3.09 | | | Crowd control staff | | | | |
| 3.10 | | | Set-up & tear down labor | | | | |
| 3.11 | | | | | | | |
| 3.12 | | Physical Resources: | Tents/shade cover | | | | |
| 3.13 | | | Security plans and guidelines | | | | |
| 3.14 | | | Magnometers | | | | |
| 3.15 | | | Wands | | | | |
| 3.16 | | | Barricade/rope & stanchion & chain | | | | |
| 3.17 | | | Signage - direction and trail blazing | | | | |

## Mega Shelter Framework for Roles and Responsibility Coordination

| City: | *insert name of city here* | Venue Name: | *insert venue name here* | | | | |
|---|---|---|---|---|---|---|---|
| | **ROLES & RESPONSIBILITIES** | | | **Coordinating Entity** | **Primary Entity** | **Supporting Entity** | **Possible Source** |
| 3.18 | | | Signage - rules and procedures | | | | |
| 3.19 | | | Megaphones | | | | |
| 3.20 | | | Tables for search | | | | |
| 3.21 | | | Trash cans | | | | |
| 3.22 | | | Water /snacks | | | | |
| 3.23 | | | Portable toilets potties 1/40 | | | | |
| 3.24 | | | | | | | |
| 4 | **Parking & Traffic Control** | | *Parking and Traffic control provide support for may of the activities in a mega shelter.* | | | | |
| 4.01 | | Human Resources: | Traffic control officers | | | | |
| 4.02 | | | Parking directors - auto parking | | | | |
| 4.03 | | | Bus loading/unloading zones | | | | |
| 4.04 | | | Accommodations for persons with disabilities | | | | |
| 4.05 | | | Set-up & tear down labor | | | | |
| 4.06 | | | | | | | |
| 4.07 | | Physical Resources: | Radios | | | | |
| 4.08 | | | Reflective vests | | | | |
| 4.09 | | | Flashlights | | | | |
| 4.10 | | | Traffic cones | | | | |
| 4.11 | | | Caution tape | | | | |
| 4.12 | | | Barricade | | | | |
| 4.13 | | | Signage | | | | |
| 4.14 | | | Trash cans- Internal (facility), external dumpsters | | | | |
| 4.15 | | | Portable toilets | | | | |
| 4.16 | | | Megaphone or PA capabilities | | | | |
| 4.17 | | | | | | | |

## Mega Shelter Framework for Roles and Responsibility Coordination

| City: | *insert name of city here* | Venue Name: | *insert venue name here* | | | | |
|---|---|---|---|---|---|---|---|
| | **ROLES & RESPONSIBILITIES** | | | **Coordinating Entity** | **Primary Entity** | **Supporting Entity** | **Possible Source** |
| 5 | **Public Information/Public Affairs/Media Relations** | | *Includes: dissemination of information to public; management of media relations; facilitation of VIP tours; controlling media access to clients and to specific areas; organizing press briefings & conferences; press releases* | | | | |
| 5.01 | | Human Resources: | Public Information Officers | | | | |
| 5.02 | | | Public affairs staff | | | | |
| 5.03 | | | | | | | |
| 5.04 | | Physical Resources: | Press Room: riser, lectern, microphone, sound system, chairs, camera platform, mult (audio distribution) box | | | | |
| 5.05 | | | Media room w/ phones & internet access | | | | |
| 5.06 | | | Media parking area | | | | |
| 5.07 | | | Joint Information Center (JIC): tables, chairs, telephones, internet access | | | | |
| 5.08 | | | Joint Information Center (JIC) Pan and operating procedure | | | | |
| | **Core Tier 2** | | | | | | |
| 6 | **Dormitory Management** | | | | | | |
| 6.01 | | Human Resources: | Shelter Manager | | | | |
| 6.02 | | | Dormitory Manager - per area | | | | |
| 6.03 | | | Resident dormitory supervisor | | | | |
| 6.04 | | | Shelter supervisors | | | | |
| 6.05 | | | Dormitory staff | | | | |
| 6.06 | | | Customer care services - for residents | | | | |
| 6.07 | | | Set-up & tear down labor | | | | |
| | | | National Sehtler System (NSS) support staff | | | | |
| 6.08 | | | | | | | |
| 6.09 | | Physical Resources: | Cots | | | | |
| 6.10 | | | Blankets | | | | |
| 6.11 | | | Comfort kits | | | | |
| 6.12 | | | Signage | | | | |
| 6.13 | | | First aid supplies | | | | |
| 6.14 | | | Administrative office area- sufficient size for individual work stations to incl. tables, chairs, telephones, internet access, fax machine, copier | | | | |
| 6.15 | | | Staff dorm room (minimum 600s.f.), | | | | |
| 6.16 | | | Staff break room (minimum 300s.f.) | | | | |

## Mega Shelter Framework for Roles and Responsibility Coordination

| City: | *insert name of city here* | Venue Name: | *insert venue name here* | | | | |
|---|---|---|---|---|---|---|---|
| | **ROLES & RESPONSIBILITIES** | | | **Coordinating Entity** | **Primary Entity** | **Supporting Entity** | **Possible Source** |
| 6.17 | | | Main dormitory area for general population | | | | |
| 6.18 | | | Separate dormitory area for families | | | | |
| 6.19 | | | Separate dormitory area for elder clients | | | | |
| 6.20 | | | Other dormitory areas | | | | |
| 6.21 | | | Space allocation / capacity plan | | | | |
| 6.22 | | | | | | | |
| 7 | **Medical & Mental Health Services** | | | | | | |
| 7.01 | | Human Resources: | Medical Director | | | | |
| 7.02 | | | Licensed professional health care workers | | | | |
| 7.03 | | | Licensed professional mental health care workers | | | | |
| 7.04 | | | Medical Clinic team | | | | |
| 7.05 | | | Triage teams | | | | |
| 7.06 | | | Medical transport | | | | |
| 7.07 | | | Field pharmacy | | | | |
| 7.08 | | | Set-up & tear down labor | | | | |
| 7.09 | | | | | | | |
| 7.10 | | Physical Resources: | Private, separate clinic area for medical services | | | | |
| 7.11 | | | Private clinic area for mental health services | | | | |
| 7.12 | | | Private area for infirmary | | | | |
| 7.13 | | | Medical supplies | | | | |
| 7.14 | | | Medical waste disposal | | | | |
| 7.15 | | | Cots/specialized medical beds | | | | |
| 7.16 | | | Pharmaceuticals | | | | |
| 7.17 | | | Medical Equip - wheelchairs & lifting devices,... | | | | |
| 7.18 | | | Automated external defibrillators | | | | |
| 7.19 | | | Ice | | | | |
| 7.20 | | | First Aid supplies | | | | |
| 7.21 | | | | | | | |

## Mega Shelter Framework for Roles and Responsibility Coordination

| City: | *insert name of city here* | Venue Name: | *insert venue name here* | | | | |
|---|---|---|---|---|---|---|---|
| | **ROLES & RESPONSIBILITIES** | | | **Coordinating Entity** | **Primary Entity** | **Supporting Entity** | **Possible Source** |
| 8 | **Meal Service** | | | | | | |
| 8.01 | | Human Resources: | Food production staff | | | | |
| 8.02 | | | Nutritionist | | | | |
| 8.03 | | | Food service staff | | | | |
| 8.04 | | | Set-up & clean-up | | | | |
| 8.05 | | | Public health - food safety inspectors | | | | |
| 8.06 | | | Volunteer / Ist Responder meals | | | | |
| 8.07 | | | | | | | |
| 8.08 | | Physical Resources: | | | | | |
| 8.09 | | | Feeding Manager Administrative area, adjacent to kitchen area, including: | | | | |
| 8.10 | | | Desks & chairs | | | | |
| 8.11 | | | Phones | | | | |
| 8.12 | | | Internet access via wireless or wired network | | | | |
| 8.13 | | | Computer & printer | | | | |
| 8.14 | | | Cooking, heating & serving equipment & utensils | | | | |
| 8.15 | | | Refrigerators & freezers with sufficient capacity for three day supply of commodities | | | | |
| 8.16 | | | Dry boxes/food storage area | | | | |
| 8.17 | | | Material handling equip (forklifts, pallet jack & chain, etc. | | | | |
| 8.18 | | | Commodities, sufficient for three days @ three meals / day | | | | |
| 8.19 | | | Infant food & formula | | | | |
| 8.20 | | | Service wares (i.e. utensils, plates, bowls,…) | | | | |
| 8.21 | | | Operating supplies | | | | |
| 8.22 | | | | | | | |
| 9 | **Communications/Information Technology** | | | | | | |
| 9.01 | | Human Resources: | Installation staff for phone lines, internet, repeaters, satellites,… | | | | |
| 9.02 | | | Command Center staff | | | | |
| 9.03 | | | IT staff | | | | |
| 9.04 | | | Tear-down staff | | | | |
| 9.05 | | | | | | | |
| 9.06 | | Physical Resources: | Two-way radios | | | | |
| 9.07 | | | Cell phones | | | | |

## Mega Shelter Framework for Roles and Responsibility Coordination

| City: | *insert name of city here* | Venue Name: | *insert venue name here* | | | | |
|---|---|---|---|---|---|---|---|
| | **ROLES & RESPONSIBILITIES** | | | **Coordinating Entity** | **Primary Entity** | **Supporting Entity** | **Possible Source** |
| 9.08 | | | Command Center | | | | |
| 9.09 | | | Technology requirements | | | | |
| 9.10 | | | Phones for clients' use | | | | |
| 9.11 | | | Computer center for clients' use w/ internet access | | | | |
| 9.12 | | | Message center - electronic signage | | | | |
| 9.13 | | | Public address systems | | | | |
| 9.14 | | | Battery charging - redundant power supply, extra batteries | | | | |
| 9.15 | | | Incident tracking software | | | | |
| 9.16 | | | Fax machines | | | | |
| | **Core Tier 3** | | | | | | |
| 10 | **Recovery Info & Resident Messaging** | | *Includes: creation of newsletters & flyers; announcements; coordination of resident shelter meetings* | | | | |
| 10.01 | | Human Resources: | Information management staff | | | | |
| 10.02 | | | Public relations staff | | | | |
| 10.03 | | | | | | | |
| 10.04 | | Physical Resources: | Bulletin Boards | | | | |
| 10.05 | | | Phones | | | | |
| 10.06 | | | Computers - w/ Internet connections | | | | |
| 10.07 | | | Local newspapers | | | | |
| 10.08 | | | Televisions & radios | | | | |
| 10.09 | | | Electronic billboards aka scoreboards | | | | |
| 10.10 | | | | | | | |
| 11 | **Family Reunification** | | *Includes: helping those affected by disaster reconnect with family members; connecting with other agencies that provide family reunification services.* | | | | |
| 11.01 | | Human Resources: | Staff to assist with resident registration | | | | |
| 11.02 | | | | | | | |
| 11.03 | | Physical Resources: | Computers w/ internet access | | | | |
| 11.04 | | | Telephones or cellular phones | | | | |
| 11.05 | | | | | | | |

## Mega Shelter Framework for Roles and Responsibility Coordination

| City: | *insert name of city here* | Venue Name: | *insert venue name here* | | | | |
|---|---|---|---|---|---|---|---|
| | **ROLES & RESPONSIBILITIES** | | | **Coordinating Entity** | **Primary Entity** | **Supporting Entity** | **Possible Source** |
| 12 | **Janitorial** | | | | | | |
| 12.01 | | Human Resources: | Janitors | | | | |
| 12.02 | | | Custodians | | | | |
| 12.03 | | | CDC/Public Health Specialist, for coordination | | | | |
| 12.04 | | | | | | | |
| 12.05 | | Physical Resources: | Showers/toilets/sinks | | | | |
| 12.06 | | | Soap, toilet paper, paper towel | | | | |
| 12.07 | | | Cleaning Supplies | | | | |
| 12.08 | | | Cleaning Equipments (i.e. mops, buckets, brooms,...) | | | | |
| 12.09 | | | Towels | | | | |
| 12.10 | | | Trash cans & dumpsters | | | | |
| 12.11 | | | Trash bags | | | | |
| 12.12 | | | Laundry support | | | | |
| 12.13 | | | Power washer - equipment or service | | | | |
| 12.14 | | | Bio/medical cleanup kits | | | | |
| 12.15 | | | | | | | |
| 13 | **Building Maintenance & Engineering** | | | | | | |
| 13.01 | | Human Resources: | Mechanical engineers | | | | |
| 13.02 | | | Electrical engineers | | | | |
| 13.03 | | | Electricians | | | | |
| 13.04 | | | Plumbers | | | | |
| 13.05 | | | Carpenters | | | | |
| 13.06 | | | | | | | |
| 13.07 | | Physical Resources: | Generators & fuel | | | | |
| 13.08 | | | Utilities | | | | |
| 13.09 | | | Trade tools | | | | |
| 13.10 | | | Lighting | | | | |
| 13.11 | | | | | | | |

## Mega Shelter Framework for Roles and Responsibility Coordination

| City: | *insert name of city here* | Venue Name: | *insert venue name here* | | | | |
|---|---|---|---|---|---|---|---|
| | **ROLES & RESPONSIBILITIES** | | | **Coordinating Entity** | **Primary Entity** | **Supporting Entity** | **Possible Source** |
| 14 | **Logistical Support** | | | | | | |
| 14.01 | | Human Resources: | Supervisors | | | | |
| 14.02 | | | General labor | | | | |
| 14.03 | | | Equipment operators | | | | |
| 14.04 | | | Inventory managers / technicians | | | | |
| 14.05 | | | Statistician - predictive modeling specialist | | | | |
| 14.06 | | | | | | | |
| 14.07 | | Physical Resources: | ***Open Ended - based on disaster caused needs*** | | | | |
| 14.08 | | | Warehouse/storage facilities | | | | |
| 14.09 | | | Fork-lifts | | | | |
| 14.10 | | | Pallet-jacks | | | | |
| 14.11 | | | Hand-trucks | | | | |
| 14.12 | | | Flat bed carts | | | | |
| 14.13 | | | Fuel for equipment | | | | |
| 14.14 | | | Signage | | | | |
| 14.15 | | | Locks/keys | | | | |
| 14.16 | | | | | | | |
| | **Need /Situational Based Roles and Responsibilities** | | | | | | |
| 15 | **Bulk Distribution** | | | | | | |
| 15.01 | | Human Resources: | Laborers | | | | |
| 15.02 | | | Fork lift operators | | | | |
| 15.03 | | | Drivers | | | | |
| 15.04 | | | Security | | | | |
| 15.05 | | | | | | | |
| 15.06 | | Physical Resources: | Tables | | | | |
| 15.07 | | | Material handling equipment: hand truck, fork lift,… | | | | |
| 15.08 | | | Storage | | | | |
| 15.09 | | | Commodities for distribution (i.e. work gloves, cleaning supplies, rakes, shovels,…) | | | | |
| 15.10 | | | Signage | | | | |
| 15.11 | | | Distribution center | | | | |

## Mega Shelter Framework for Roles and Responsibility Coordination

| City: | *insert name of city here* | Venue Name: | *insert venue name here* | | | | |
|---|---|---|---|---|---|---|---|
| | **ROLES & RESPONSIBILITIES** | | | **Coordinating Entity** | **Primary Entity** | **Supporting Entity** | **Possible Source** |
| 16 | **Donation Management** | | *Includes: facilitation of the receipt of donated goods on site* | | | | |
| 16.01 | | Human Resources: | Agency or organizational representations | | | | |
| 16.02 | | | Security | | | | |
| 16.03 | | | General labor | | | | |
| 16.04 | | | | | | | |
| 16.05 | | Physical Resources: | Distinctly separate area from shelter open to public | | | | |
| 16.06 | | | Tables/chairs | | | | |
| 16.07 | | | Signage | | | | |
| 16.08 | | | Storage & sorting areas | | | | |
| 16.09 | | | Receiving area | | | | |
| 17 | **Entertainment/Recreation** | | | | | | |
| 17.01 | | Human Resources: | Entertainers | | | | |
| 17.02 | | | Supervisors / monitors | | | | |
| 17.03 | | | Technicians | | | | |
| 17.04 | | | | | | | |
| 17.05 | | Physical Resources: | Televisions | | | | |
| 17.06 | | | Computers w/ internet access | | | | |
| 17.07 | | | Video Games and equipment | | | | |
| 17.08 | | | Furniture | | | | |
| 17.09 | | | Radios | | | | |
| 17.10 | | | DVD players & DVDs | | | | |
| 17.11 | | | Board games, playing cards, books, toys | | | | |
| 17.12 | | | Outside games: Sidewalk chalk,... | | | | |
| 17.13 | | | Sports Equipment, balls, etc. | | | | |
| 17.14 | | | Basketball courts, recreation areas, aerobic center | | | | |
| 18 | **Child Care** | | | | | | |
| 18.01 | | Human Resources: | Credentialed Child Care personnel | | | | |
| 18.02 | | | | | | | |
| 18.03 | | Physical Resources: | Space away from general population - one or more rooms/separate areas for specific age ranges | | | | |
| 18.04 | | | Diapers | | | | |
| 18.05 | | | Changing stations | | | | |
| 18.06 | | | Toys, games, books | | | | |

## Mega Shelter Framework for Roles and Responsibility Coordination

| City: | *insert name of city here* | Venue Name: | *insert venue name here* | | | | |
|---|---|---|---|---|---|---|---|
| | **ROLES & RESPONSIBILITIES** | | | **Coordinating Entity** | **Primary Entity** | **Supporting Entity** | **Possible Source** |
| 18.07 | | | | | | | |
| 19 | **Pet Sheltering Liaison** | | | | | | |
| 19.01 | | Human Resources: | Vet or animal care takers | | | | |
| 19.02 | | | Walkers, etc. | | | | |
| 19.03 | | | Security | | | | |
| 19.04 | | | Cleanup staff | | | | |
| 19.05 | | | Set-up & tear down | | | | |
| 19.06 | | | | | | | |
| 19.07 | | Physical Resources: | general population w/ ventilation & heating/cooling | | | | |
| 19.08 | | | Pet crates | | | | |
| 19.09 | | | Pet food | | | | |
| 19.10 | | | Food & water bowls | | | | |
| 19.11 | | | | | | | |
| 20 | **Laundry Service** | | | | | | |
| 20.01 | | Human Resources: | | | | | |
| 20.02 | | | | | | | |
| 20.03 | | Physical Resources: | Wash/dry capability | | | | |
| 20.04 | | | Laundry bags with identification | | | | |
| 20.05 | | | | | | | |
| 21 | **Transportation Services for Clients** | | Includes: in-bound, out-bound, shuttle services, access to public transportation | | | | |
| 21.01 | | Human Resources: | Schedule coordinator, supervisor | | | | |
| 21.02 | | | Crowd control | | | | |
| 21.03 | | | Vehicle operators | | | | |
| 21.04 | | | | | | | |
| 21.05 | | Physical Resources: | Buses | | | | |
| 21.06 | | | Vans | | | | |
| 21.07 | | | Line control equipment | | | | |
| 21.08 | | | Signage | | | | |

## Mega Shelter Framework for Roles and Responsibility Coordination

| City: | *insert name of city here* | Venue Name: | *insert venue name here* | | | | |
|---|---|---|---|---|---|---|---|
| | **ROLES & RESPONSIBILITIES** | | | **Coordinating Entity** | **Primary Entity** | **Supporting Entity** | **Possible Source** |
| 22 | **Postal Service** | | | | | | |
| 22.01 | | Human Resources: | Coordinator with US Postal Service | | | | |
| 22.02 | | | | | | | |
| 22.03 | | Physical Resources: | Secure postal storage area | | | | |
| 22.04 | | | Signage | | | | |
| 22.05 | | | Phone & fax lines | | | | |
| 22.06 | | | Internet connectivity | | | | |
| 22.07 | | | | | | | |

# Works Cited

American Red Cross. (2011). Shelter Facility Survey. 8-15-2011, 1-8. doi:American Red Cross Exchange

American Red Cross. (2011). Shelter Facility Survey Accessibility Instructions. 8-15-2011, 1-6. doi:American Red Cross Exchange

Disaster Cycle Services Red Cross. (2016). Disaster Facility Requirements Checklist. Red Cross Disaster Cycle Services Job Tools, 0.3, 1-10. doi:American Red Cross Exchange

IAVM Life Safety Council. (2010). Mega-shelter Planning Guide. Academy for Venue Safety & Security, 255-264. Retrieved from https://www.fema.gov/pdf/emergency/disasterhousing/mspg.pdf.