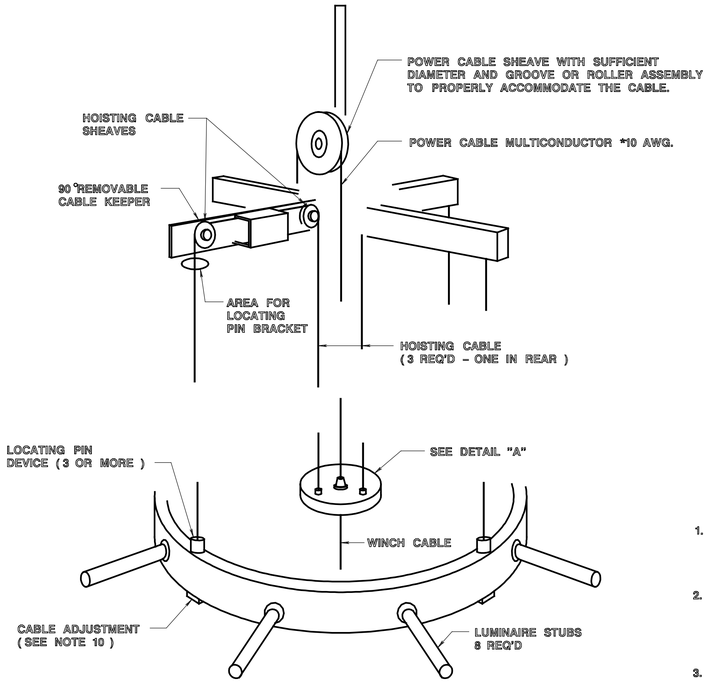

LUMINAIRE RING ASSEMBLY

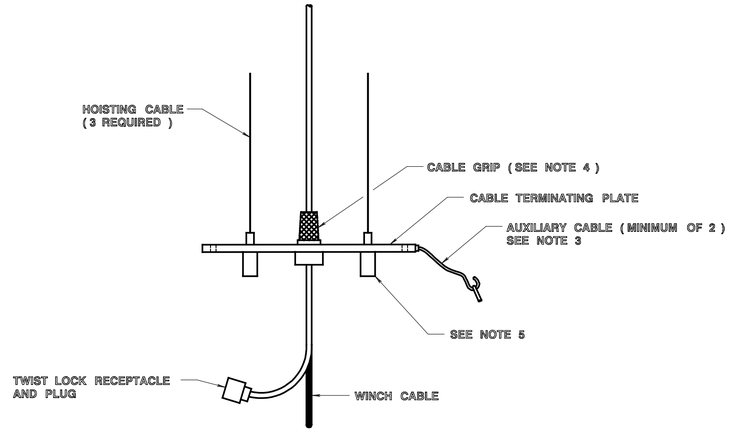

DETAIL "A"

NOTES:

1. LIGHTING DISTRIBUTION MUST BE PER NEW JERSEY DEPARTMENT OF TRANSPORTATION SPECIFICATION EB-LMPS-4 AND MUST BE APPROVED BY THE DEPARTMENT
2. ARROW ON GENERAL PLANS DENOTES ORIENTATION OF LIGHTING DISTRIBUTION REQUIRED FOR POSITIONING OF LUMINAIRES. ARROW DIRECTIONS ARE SHOWN FOR EACH TOWER ASSEMBLY ON RESPECTIVE PLAN SHEET.
3. A BOTTOM LOCKING DEVICE WILL BE PROVIDED TO REMOVE TENSION FROM THE WINCH SUBJECT TO THE DEPARTMENT APPROVAL.
4. THE POWER CABLE SHALL BE PROVIDED WITH AN APPROVED STRAIN RELIEF DEVICE.
5. EACH HOISTING CABLE SHALL BE PROVIDED WITH A SPRING LOADED SHOCK ABSORBER TO PREVENT CABLE STRETCH DUE TO MOVEMENT OF THE TOWER WHEN RING IS IN THE UPPER POSITION.
6. THERE SHALL BE SPRING LOADED GUIDE ARMS (MIN. OF 3).
7. THE LUMINAIRE RING ASSEMBLY AND SUPPORT ASSEMBLY SHALL BE PROVIDED WITH SUITABLE POSITIONING DEVICES. (MINIMUM OF THREE (3) LOCATING PINS.)
8. HEAD ASSEMBLY WILL BE PROVIDED WITH AN ALUMINUM COVER.
9. THE ONLY OPENINGS ON THE HEAD ASSEMBLY SHALL BE THE HOLES THROUGH WHICH THE LUMINAIRE RING HOISTING CABLES AND POWER CABLE PASS.
10. ALL CABLES SHALL BE ADJUSTED FROM THE ACCESS DOOR.

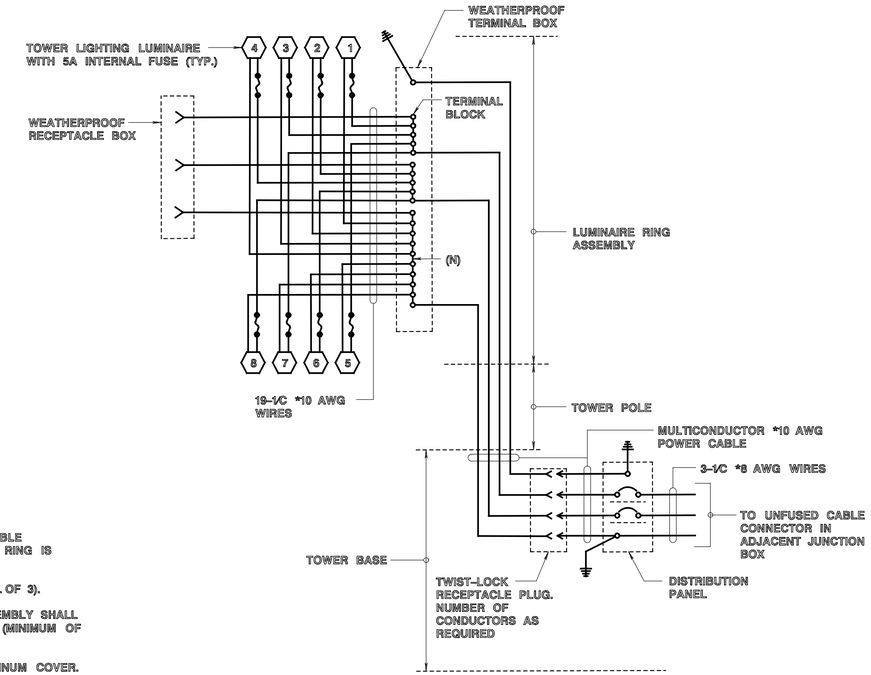

TYPICAL TOWER LIGHTING STANDARD DIAGRAM

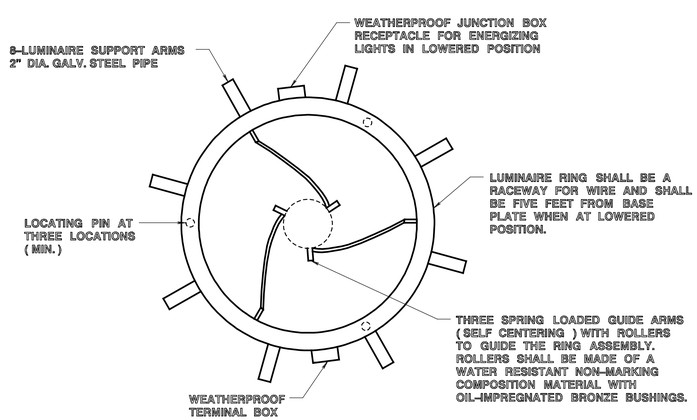

LUMINAIRE RING ASSEMBLY DETAIL

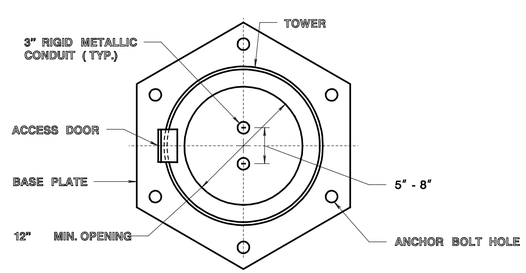

BASE PLATE AND CONDUIT INSTALLATION DETAILS

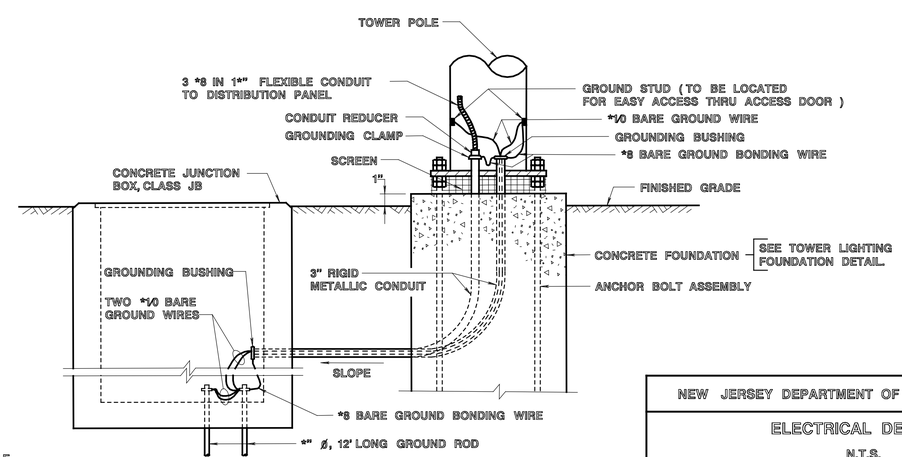

TOWER INSTALLATION AND DETAILS

NEW JERSEY DEPARTMENT OF TRANSPORTATION

ELECTRICAL DETAILS

N.T.S.

TOWER LIGHTING

L-2007

SHEET 2 OF 2

REFERENCE

BDC07D-03