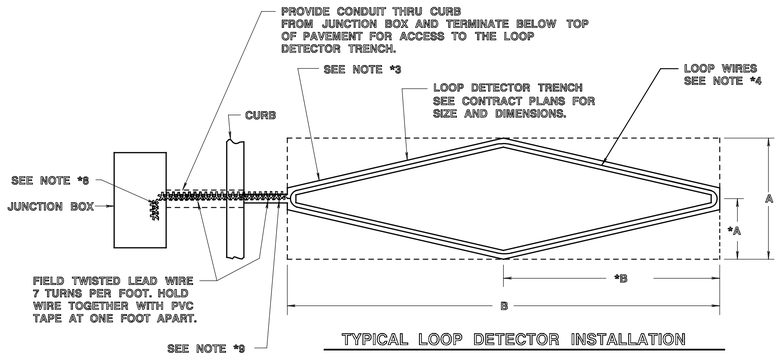

TYPICAL LOOP DETECTOR INSTALLATION

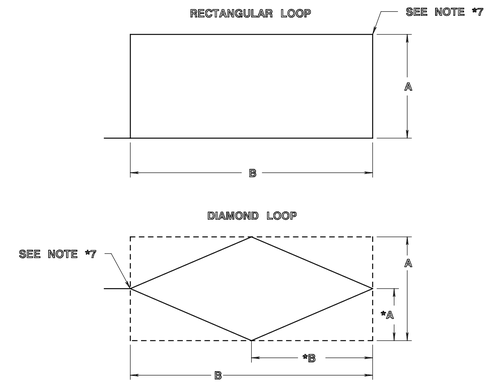

LOOP CONFIGURATIONS

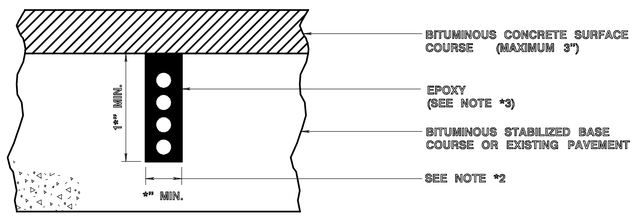

SKETCH "A"

SECTION SHOWING INSTALLATION IN NEW ROADWAYS OR IN EXISTING ROAD WITH NEW OVERLAY SEE NOTE *6

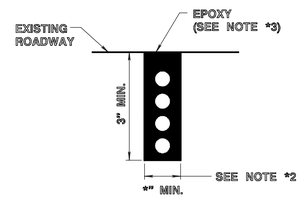

SKETCH "B"

SECTION SHOWING INSTALLATION IN EXISTING ROADWAY WITH NO NEW OVERLAY

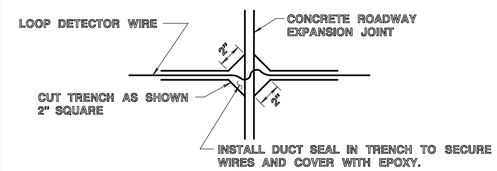

TYPICAL CONCRETE EXPANSION JOINT CUT FOR LOOP DETECTOR WIRE

GENERAL NOTES

1.) SKETCH "A" & "B" APPLIES WHEN CONTRACT PROVIDES FOR LOOP DETECTOR ONLY.

2.) DIMENSIONS AND CONFIGURATIONS FOR LOOP DETECTOR TRENCHES SHALL BE AS SHOWN ON THE PLAN SHEETS FOR EACH LOCATION. PROVIDE TRENCH OF SUFFICIENT SIZE TO ACCOMMODATE THE TYPE AND THE NUMBER OF OF CONDUCTORS REQUIRED BY LOOP DETECTOR SENSOR.

3.) EPOXY FOR LOOP DETECTORS TO BE A FLEXIBLE SEALER WITH SUFFICIENT STRENGTH AND RESILIENCY TO WITHSTAND STRESS SET UP BY DIFFERENCE IN EXPANSION AND CONTRACTION OF THE PAVEMENT CAUSED BY TEMPERATURE CHANGES AND NORMAL PAVEMENT MOVEMENT.

4.) THE LOOP INDUCTANCE MEASURED IN THE FIELD. ALL LOOPS HAVE SIX TURNS.

5.) "DIAMOND" LOOPS ARE BASED ON RECTANGULAR MEASUREMENTS GIVEN IN THE LOOP DETECTOR SCHEDULE ON PLAN SHEETS FOR EACH LOCATION.

6.) LOOPS IN EXISTING ROADWAY INSTALLED AFTER THE MILLING PROCESS AND PRIOR TO THE INSTALLATION OF THE NEW OVERLAY.

7.) ALL CORNERS ARE CUT SMOOTH WITH A CHISEL TO ASSURE A CLEAN SMOOTH RADIUS.

8.) THE SPLICE KIT USED TO SPLICE THE LOOP DETECTOR LEAD TO THE LOOP WIRE SHALL ENCAPSULATE A MINIMUM OF 1" OF THE LOOP WIRE TUBING.

9.) IF THE LOOP WIRE IN THE CUT TRENCH TO THE CURB LINE IS DUCT WIRE, IT SHALL NOT BE TWISTED BUT TAPED TOGETHER EVERY 6" WITH PVC TAPE.

NEW JERSEY DEPARTMENT OF TRANSPORTATION

ELECTRICAL DETAILS

N.T.S.

LOOP DETECTOR TRENCH & LOOP DETECTOR

T-2007

REFERENCE

BDC07D-03