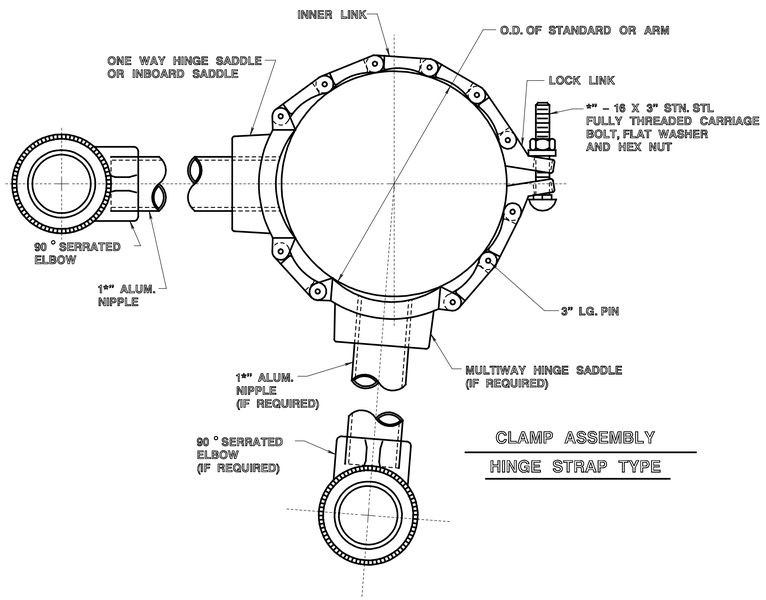

CLAMP ASSEMBLY

HINGE STRAP TYPE

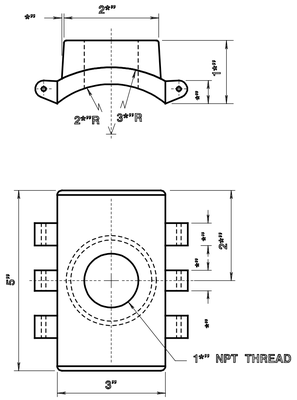

ONE–WAY HINGE SADDLE

MTL: ALUM. CASTING

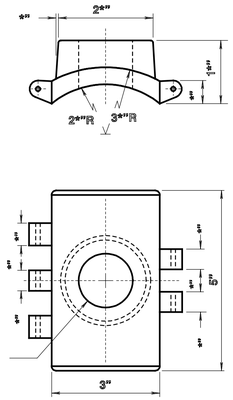

MULTI–WAY HINGE SADDLE

MTL: ALUM. CASTING

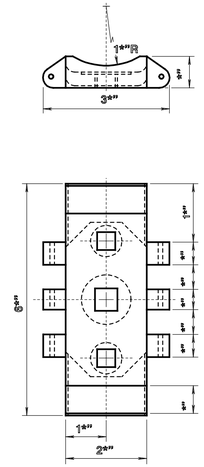

INBOARD SADDLE

MTL: ALUM. CASTING

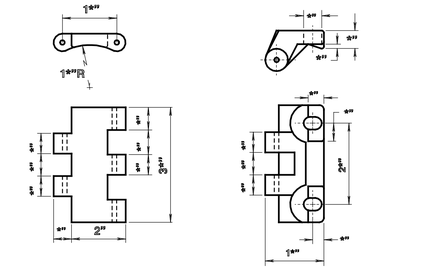

INNER LINK

MTL: ALUM. CASTING

LOCK LINK

MTL: ALUM. CASTING

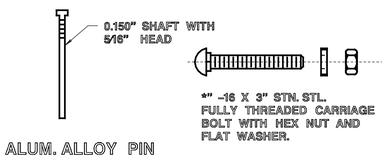

3" ALUM. ALLOY PIN

PROVIDED WITH SADDLES
AND LINKS

NOTE:

ALL HINGE STRAPS INNER LINK AND LOCK LINK PARTS SHALL BE TUMBLED FOR 18 HOURS MINIMUM USING *" CERAMIC MEDIA TO PROVIDE A UNIFORM AND SMOOTH SURFACE.

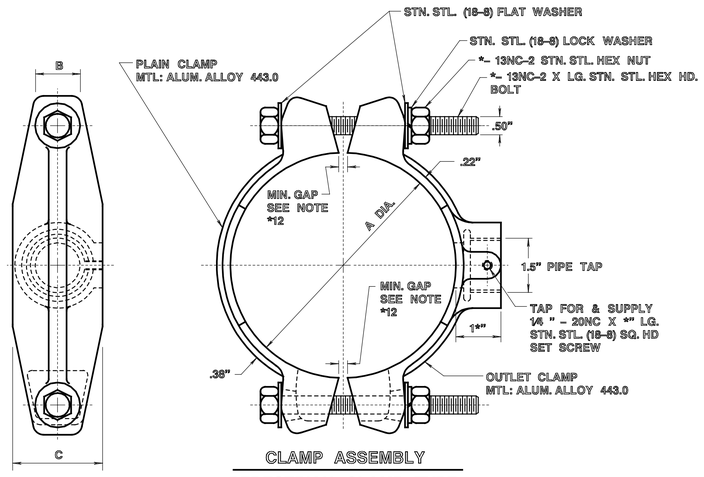

CLAMP ASSEMBLY

PEDESTRIAN CLAMP TYPE

HINGE STRAP LIST OF MATERIALS

DESCRIPTION	MATERIAL	NO. REQ'D
HINGE SADDLE	B26–82 CAST ALUM.	2
INNER LINK	B26–82 CAST ALUM.	23*(32)
LOCK LINK	B26–82 CAST ALUM.	4
STD. 1*" NIPPLE	ALUM. ALLOY	2
90 ° SERRATED ELBOW	ALUM. ALLOY 443.0	2
3" ALUMINUM PIN	ALUM. ALLOY 443.0	30*(38)
BOLT *" – 16 X 3"	STN. STL.	4
FLAT WASHER	STN. STL.	4
LOCK WASHER	STN. STL.	4
NUT, HEX *" – 16	STN. STL.	4
MULTI–WAY HINGE SADDLE	CAST ALUM.	AS REQ'D
INBOARD SADDLE	CAST ALUM.	AS REQ'D
1*" CHASE NIPPLE	BRZ. 85–5–5–5	2

*( ) NUMBER REQUIRED WHEN INSTALLED ON "K" POLE

PEDESTRIAN CLAMP
LIST OF MATERIALS

DESCRIPTION	MATERIAL	NO. REQ'D.
PLAIN CLAMP	ALUM. ALLOY 443.0	2
OUTLET CLAMP	ALUM. ALLOY 443.0	2
BOLT, HEX HD. *" – 13NC–2 X LG.	STN. STL.	4
LOCK WASHER *"	STN. STL.	4
FLAT WASHER *"	STN. STL.	8
HEX NUT *" – 13NC–2	STN. STL.	4
SET SCREW, SQ. HD. *" –20 X*" LG.	STN. STL.	2
1*" CHASE NIPPLE	BRZ. 85–5–5–5	2
90 ° SERRATED ELBOW	ALUM. ALLOY 443.0	2
STD. 1*" NIPPLE X LG.	ALUM. 6061–T6	2

NOTE:

TIGHTEN HARDWARE AS PER TORQUE RATING AS RECOMMENDED BY THE MANUFACTURER.

PEDESTRIAN CLAMP DIMENSIONS

A	B	C	BOLT LGTH.
6"–8"	1.25"	2.5"	6.0"
8"–10"	1.25"	2.5"	7.5"
10"–12"	1.50"	2.875"	9.0"

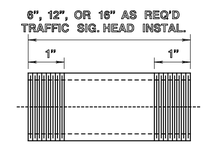

STD. 1*" NIPPLE

MTL: ALUM ALLOY 6061–T6 ASTM B–241

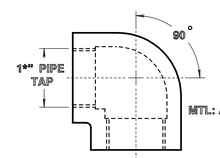

ELBOW

MTL: ALUM. ALLOY 443.0

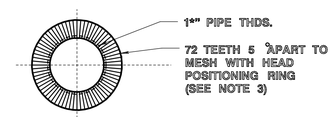

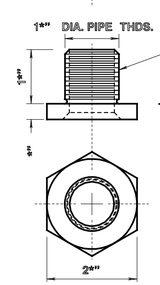

1*" CHASE NIPPLE

MTL: BRZ. 85–5–5–5

NIPPLE, ELBOW AND/OR CHASE NIPPLE TO BE USED WITH HINGE STRAP OR PEDESTRIAN CLAMP AS REQUIRED.

NOTES:

1. PEDESTRIAN CLAMP TYPE CAST ALUMINUM, CLAMP SHOWN MUST MEET THE FOLLOWING TESTS: 6" DIA. CLAMP TEST.

   COMPLETE CLAMP SHALL BE SET ON 6" DIA. STANDARD.
   COMPLETE CLAMP WITH 6.5" DIA. SET SHALL BE SET ON 8" DIA. STANDARD.
   COMPLETE CLAMP AFTER BEING SET FROM 8" DIA. STANDARD SHALL BE RESET ON 6" DIA. STANDARD.
   CLAMPS SHALL NOT SHOW ANY FRACTURES AFTER THE SETTING AND RESETTING PROCEDURE.
   THIS TEST TO BE CONDUCTED IN THE PRESENCE OF A REPRESENTATIVE OF THE NEW JERSEY DEPARTMENT OF TRANSPORTATION.
   MANUFACTURER MUST SUBMIT DRAWING OF CLAMP TO BE FURNISHED FOR APPROVAL OF THE NEW JERSEY DEPARTMENT OF TRANSPORTATION.
2. CAST ALUM. CLAMPS OF LARGER DIA. WILL BE TESTED IN A SIMILAR MANNER.
3. PROVIDE SLOTS OR SERRATIONS IN FACE OF ELBOW OR SLOTS & SERRATED POSITIONING RING. SLOTS TO BE *" DP X *" W. SERRATIONS TO MATCH HOUSING AND ALLOW 5 ° ADJUSTMENT.
4. DESIGN AND MANUFACTURE ACCORDING TO THE 2001 AASHTO STANDARD SPECIFICATIONS FOR STRUCTURAL SUPPORTS FOR HIGHWAY SIGNS, LUMINAIRES AND TRAFFIC SIGNALS. UTILIZE APPENDIX C OF THE SPECIFICATIONS FOR IDENTIFICATION OF LOADING CRITERIA. DESIGN WIND SPEED IS 80 MPH. DESIGN FOR FATIGUE IS WAVED.
5. INSTALL 1*" I.D. RUBBER GROMMET IN TRAFFIC SIGNAL STANDARD.
6. ALL STN. STL. BOLTS PER ASTM A193 GRADE B8 OR ASTM F593 ALLOY 304.
7. ALL ALUM. SAND CASTINGS ARE ASTM B26 ALLOY.
8. ALL ALUM. NIPPLES ARE 6061–T6, ASTM B–241 ALLOY; MIL. SPEC. QQA 200/60F.
9. HINGE STRAP IS ADAPTABLE TO ANY POLE DIA. BY ADDING OR REMOVING INNER LINKS.
10. HINGE STRAP CAN BE INSTALLED ON ROUND, SQUARE, OCTAGONAL OR ANY SHAPE STANDARD DESIRED.
11. ALL TOLERANCES OF CASTINGS ARE ±*".
12. WHEN PEDESTRIAN CLAMP IS INSTALLED ON A 6" DIA. STANDARD, CLAMP WILL BE DESIGNED TO PROVIDE A MINIMUM GAP OF *".

NEW JERSEY DEPARTMENT OF TRANSPORTATION

ELECTRICAL DETAILS

N.T.S.

CLAMP MOUNTING DETAILS

T–0607

REFERENCE

BDC07D-03