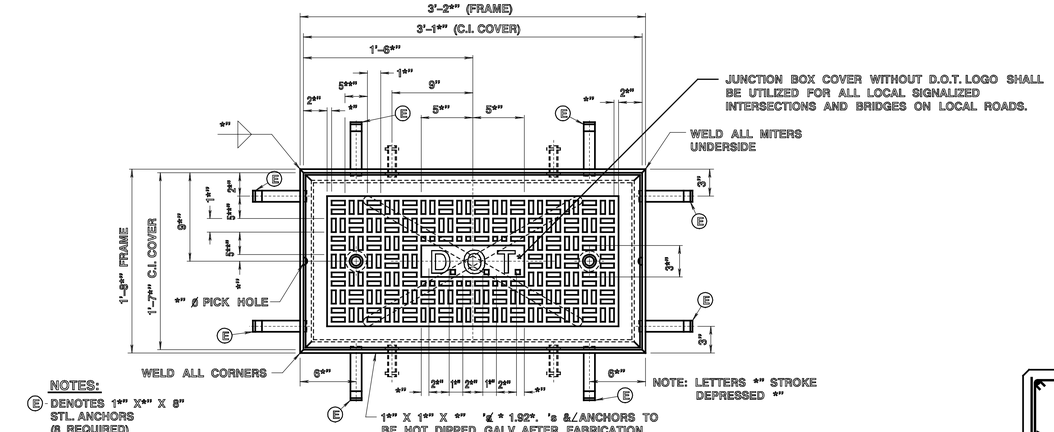

NOTES:

(E) DENOTES 1*" X*" X 8" STL. ANCHORS (8 REQUIRED)

FRAME AND ANCHORS SHALL BE STRUCTURAL STEEL

PLAN–FRAME AND COVER FOR 18" X 36" JUNCTION BOX

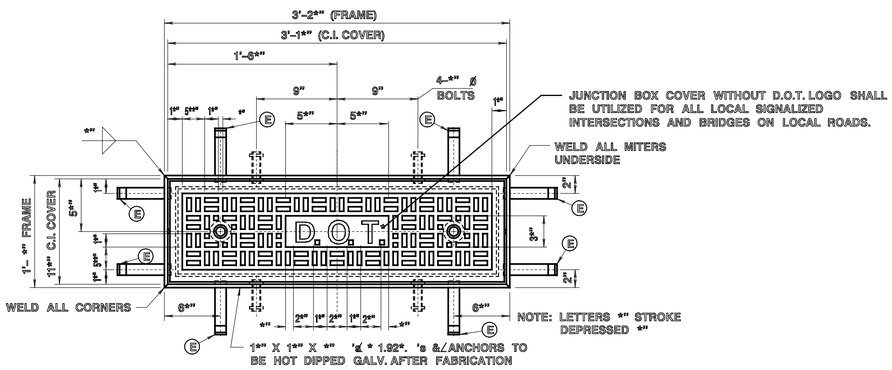

PLAN–FRAME AND COVER FOR 10" X 36" JUNCTION BOX

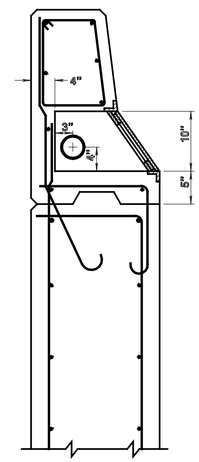

CROSS SECTION

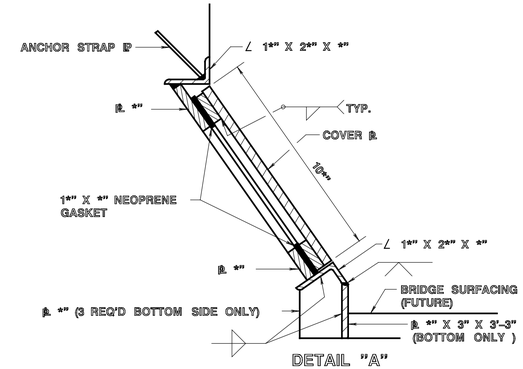

DETAIL "A"

NOTES:

1. BOLT LOCATION ARE SYMMETRICAL ABOUT CENTER LINES.
2. NEOPRENE GASKET SHALL BE CONTINUOUS AND SINGLE PIECE.
3. ALL WELDS SHALL BE *" CONTINUOUS WELDS.

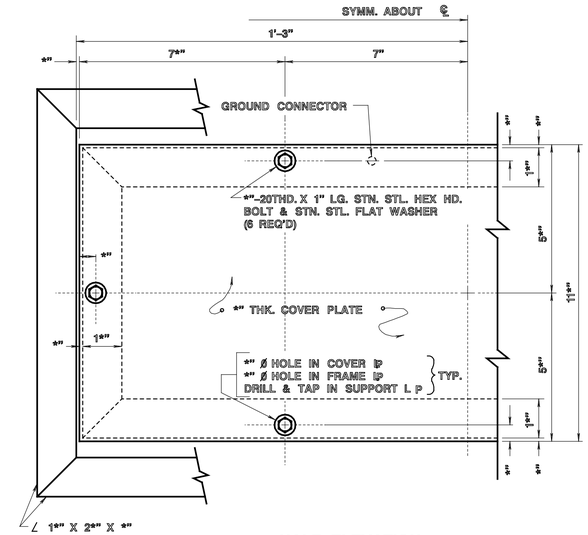

HALF ELEVATION
JUNCTION BOX COVER

NOTE:

1. MATERIAL–ASTM A36–HOT DIP GALVANIZED AFTER FABRICATION.
2. FOR LIGHTING BOSS DETAILS SEE BRIDGE PLANS.

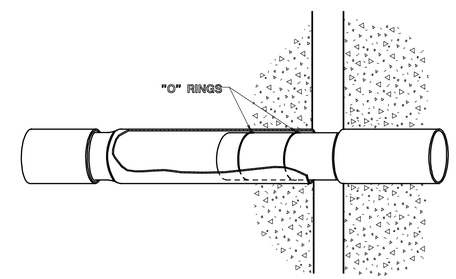

TYPICAL RIGID NON–METALLIC
EXPANSION FITTING

NOTES:

1. EXPANSION FITTING TO BE INSTALLED AT ALL EXPANSION JOINTS.
2. EXPANSION FITTING TO BE WEATHERPROOF WITH 6" MIN. MOVEMENT.
3. EXPANSION FITTING SHALL BE INSTALLED ACCORDING TO MANUFACTURER'S SPECIFICATIONS.

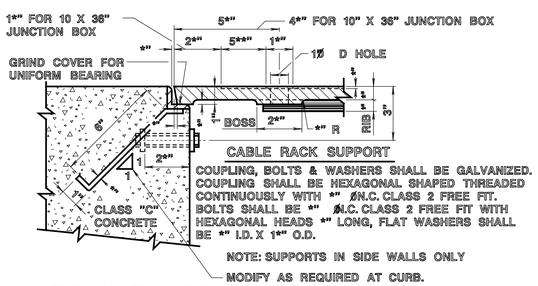

CABLE RACK SUPPORT

END SECTION THRU JUNCTION BOXES

18" X 36" SHOWN. 10" X 36" SIMILAR EXCEPT AS NOTED

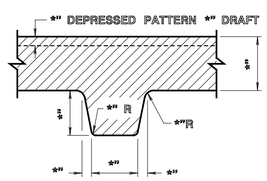

SECTION RIB

CONSTRUCTION REQUIREMENTS

1. CONDUITS SHALL BE RIGID METALLIC CONDUIT UNLESS OTHERWISE SPECIFIED.
2. CONDUITS SHALL BE INSTALLED PITCHED TO DRAIN AT OPEN ENDS OR AT "T" DRAINS AS SHOWN ON DRAWING OR AS DIRECTED BY THE ENGINEER OR AS SET FORTH IN THE SPECIFICATIONS.
3. A NYLON CORD 500 LB. MIN. TEST SHALL BE INSTALLED IN ALL CONDUITS.
4. INSTALLATION SHALL CONFORM WITH APPLICABLE REQUIREMENT OF N.E.C. AND LOCAL UTILITY COMPANY

PAINTING REQUIREMENTS

JUNCTION BOX FRAME AND COVER SHALL BE PAINTED AS SPECIFIED FOR STRUCTURAL STEEL EXCEPT THAT THE FINAL FIELD COAT SHALL MATCH THE COLOR OF THE ADJACENT CONCRETE.

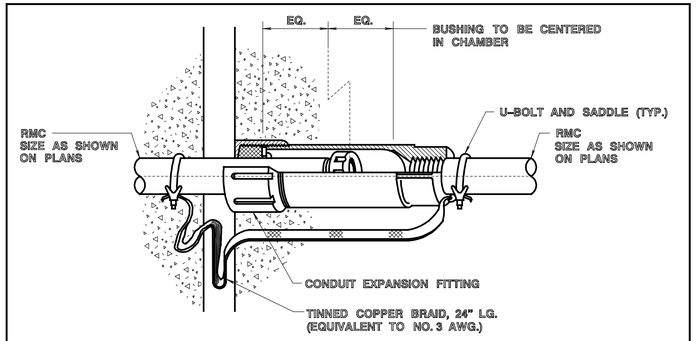

TYPICAL DETAIL
CONDUIT EXPANSION FITTING

NOTES:

1. EXPANSION FITTING TO BE INSTALLED AT ALL EXPANSION JOINTS.
2. RIGID METALLIC CONDUIT AND FITTING SHALL BE HOT–DIPPED GALVANIZED.
3. EXPANSION FITTING TO BE WEATHERPROOF WITH 4" MIN. MOVEMENT.

NEW JERSEY DEPARTMENT OF TRANSPORTATION

ELECTRICAL DETAILS

N.T.S.

BRIDGE DETAILS

L–1107

REFERENCE

BDC07D-03