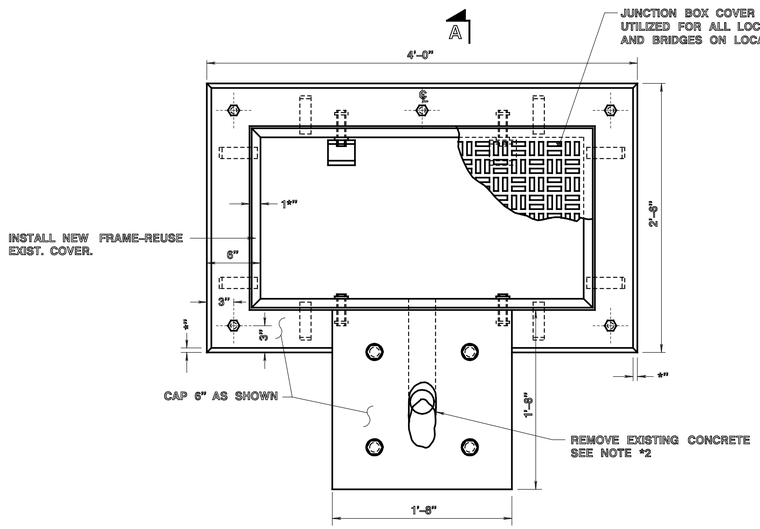

JUNCTION BOX FOUNDATION – "JBF"

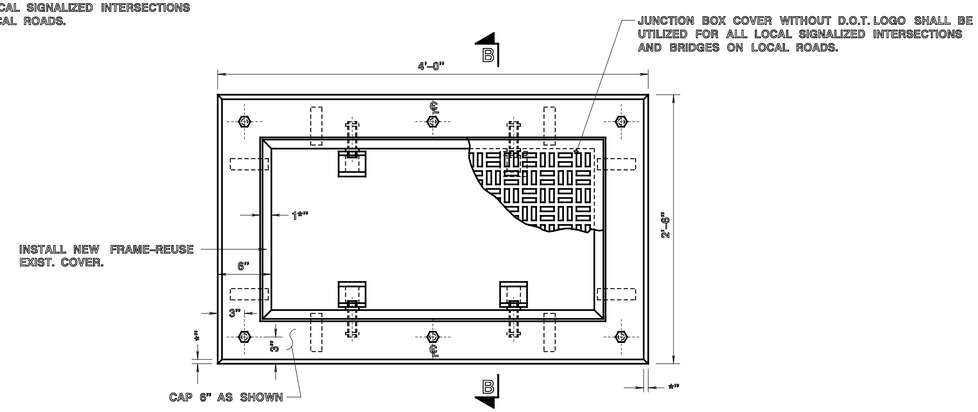

18" X 36" JUNCTION BOX – "JB"

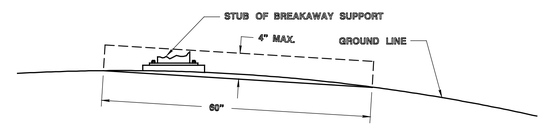

BREAKAWAY SUPPORT HEIGHT MEASUREMENT

DETAIL "A"

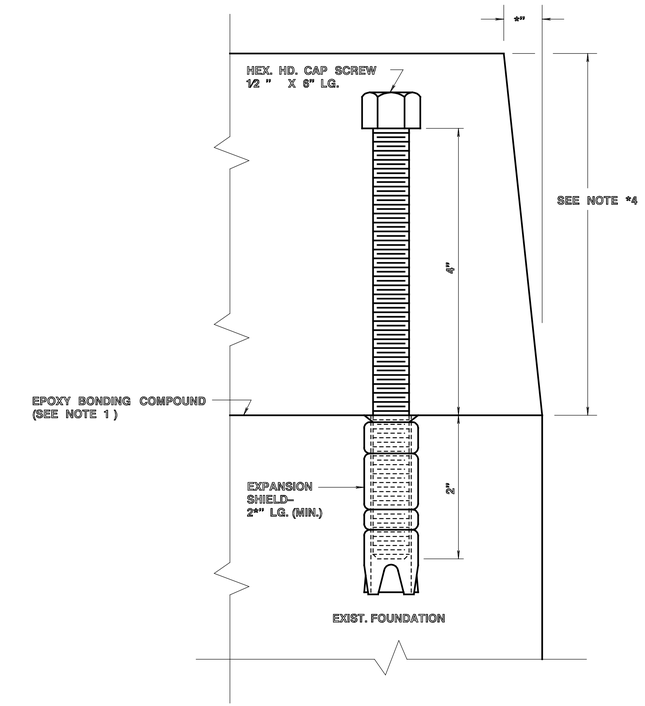

DETAIL FOR ANCHOR BOLTS

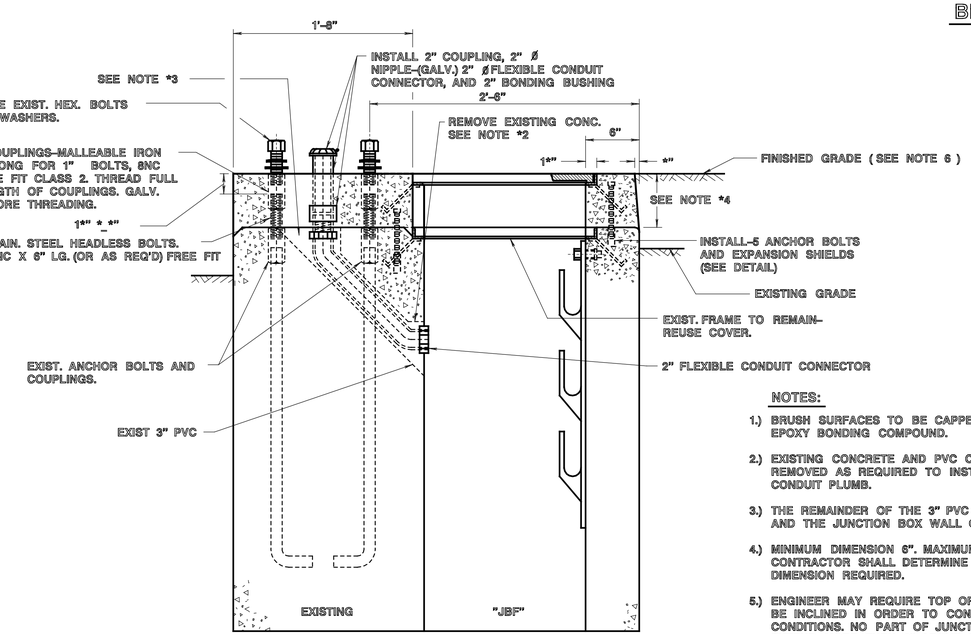

SECTION A–A

NOTES:

1.) BRUSH SURFACES TO BE CAPPED WITH EPOXY BONDING COMPOUND.

2.) EXISTING CONCRETE AND PVC CONDUIT SHALL BE REMOVED AS REQUIRED TO INSTALL THE FLEXIBLE CONDUIT PLUMB.

3.) THE REMAINDER OF THE 3" PVC SHALL BE SEALED AND THE JUNCTION BOX WALL GROUTED FLUSH.

4.) MINIMUM DIMENSION 6". MAXIMUM OF 18". CONTRACTOR SHALL DETERMINE THE EXACT DIMENSION REQUIRED.

5.) ENGINEER MAY REQUIRE TOP OF JUNCTION BOX TO BE INCLINED IN ORDER TO CONFORM WITH FIELD CONDITIONS. NO PART OF JUNCTION BOX SHALL EXTEND MORE THEN 2" ABOVE FINISHED GRADE. JUNCTION BOX SHALL BE SET TO GRADE IN SIDE–WALK AREA.

6.) JUNCTION BOX FOUNDATION IN DIRT OR GRASS AREAS SHALL MEET THE CRITERIA AS PER DETAIL "A".

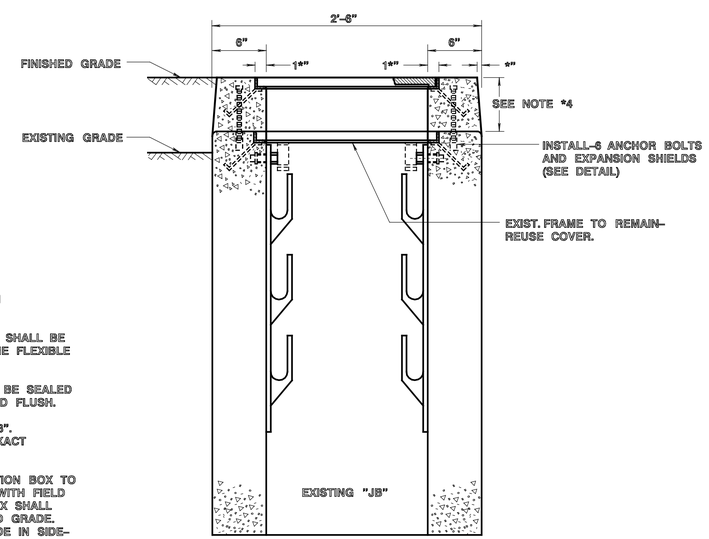

SECTION B–B

CAPPING DETAILS FOR EXTENSIONS OF EXISTING JUNCTION BOX FOUNDATION – ("JBF")
AND 18" X 36" JUNCTION BOX – ("JB")

NEW JERSEY DEPARTMENT OF TRANSPORTATION

ELECTRICAL DETAILS

N.T.S.

CAPPING DETAILS FOR JBF & 18" X 36" JB

L–1307

REFERENCE

BDC07D-03