INDEX FOR STANDARD ELECTRICAL DETAILS

DRAWING NUMBER	DESCRIPTION	DRAWING NUMBER	DESCRIPTION	DRAWING NUMBER	DESCRIPTION
T-0107	TRAFFIC SIGNAL STANDARD "T"	L-0107	LIGHTING STANDARD WITH LIGHTING MAST ARMS	ITS-704-01	OBSOLETE EFFECTIVE 8/8/2019
T-0207	TRAFFIC SIGNAL ALUMINUM TRANSFORMER BASE TB-20	L-0207	METER CABINET 2M 240/480 VOLT AND 2M-MC 240/480 VOLT	ITS-704-02	OBSOLETE EFFECTIVE 8/8/2019
T-0307	TRAFFIC SIGNAL MAST ARM ALUMINUM 15', 20' & 25' WITH CLAMP DETAILS	L-0307	METER CABINET FOUNDATION TYPE "1-M", "2-M", "1M-MC", "2M-MC" & "MCF"	ITS-704-03	TYPICAL CONDUIT OVER CULVERT
	FOR "T" & "C" STANDARDS, & SAFETY CHAIN INSTALLATION	L-0407	JUNCTION BOX FOUNDATION "JBF" CAST IN PLACE	ITS-704-04	TYPICAL UNDERGROUND ITS CONDUIT TRANSITION AND LAYOUT
T-0407	UNIVERSAL JOINT, WIRE OUTLET, MAST ARM SLIP FITTER, POST TOP ADAPTER				
	AND ELEVATOR PLUMBIZER	L-0507	JUNCTION BOX FOUNDATION "JBF", 18" x 36" JUNCTION BOX "JB" PRECAST	ITS-704-05	ITS CONDUIT TYPE A
T-0507	DETAILS OF SIGNAL ASSEMBLY SPIDER AND T-BAR	L-0607	18" x 36" JUNCTION BOX CAST IN PLACE, TYPICAL INSTALLATION	ITS-704-06	FIBER OPTIC WARNING TAPE, MARKER AND TAG
			OF JUNCTION BOX & UNDER ROADWAY CONDUIT		
T-0607	CLAMP MOUNTING DETAILS			ITS-704-07	JUNCTION BOX ITS TYPE A
		L-0707	METER CABINET, 1M, 120/240 VOLT AND TYPE 1M-MC, 120/240 VOLT		
T-0707	PEDESTRIAN SIGNAL STANDARD, SLIP FITTER, PUSH BUTTON & ANCHOR BOLT			ITS-704-08	JUNCTION BOX ITS TYPE B
		L-0907	METER CABINET DETAILS "L" ELECTRICAL INSTALLATION		
T-0807	TRAFFIC SIGNAL STANDARD "C"			ITS-704-09	JUNCTION BOX ITS TYPE C
		L-1007	SIGN LIGHTING FOR "GO" SIGNS		
T-0907	TRAFFIC SIGNAL MAST ARM 15', 20' & 25' WITH CLAMP DETAIL FOR "K" STANDARD			ITS-704-10	JUNCTION BOX ITS TYPE D
		L-1107	BRIDGE DETAILS		
T-1007	TRAFFIC SIGNAL STANDARD "K" TRANSFORMER BASE & TRAFFIC SIGNAL EXTENSION "KE"			ITS-704-11	CAMERA SURVEILLANCE SYSTEM, CAMERA STANDARD TYPE A & B SHEET 1 OF 3
		L-1307	CAPPING DETAILS FOR JBF & 18" x 36" JUNCTION BOX		
T-1107	TRAFFIC SIGNAL STANDARD, STEEL AND MAST ARM DETAILS			ITS-704-12	CAMERA SURVEILLANCE SYSTEM, CAMERA STANDARD TYPE A & B SHEET 2 OF 3
		L-1407	METER CABINET, CAST & FABRICATED		
T-1207	TRAFFIC SIGNAL MAST ARM-TROMBONE WITH CLAMP DETAILFOR "T" & "C" STANDARDS			ITS-704-13	CAMERA SURVEILLANCE SYSTEM, CAMERA STANDARD TYPE A & B SHEET 3 OF 3
		L-1507	ALUMINUM TRANSFORMER BASE DETAILS PART No. NJTB - 30		
T-1307	TRAFFIC SIGNAL STANDARD, SC AND MAST ARM ASSEMBLY DETAILS			ITS-704-14	CAMERA SURVEILLANCE SYSTEM, CAMERA STANDARD TYPE C SHEET 1 OF 2
		L-1707	SCHEMATIC WIRING DIAGRAM		
T-1407	"RED SIGNAL AHEAD" SIGN			ITS-704-15	CAMERA SURVEILLANCE SYSTEM, CAMERA STANDARD TYPE C SHEET 2 OF 2
		L-1807	LIGHTING STANDARD		
T-1607	TYPICAL DETAILS FOR FOUNDATION MCF, P & P-MC			ITS-704-16	CAMERA SURVEILLANCE SYSTEM, FOUNDATION CSS
		L-1907	DETAIL OF TYPICAL UNDERDECK LIGHTING INSTALLATION		
T-1707	TYPICAL DETAILS FOR FOUNDATION SFT, SFK & SPF			ITS-704-17	CAMERA SURVEILLANCE SYSTEM, CONTROLLER CAMERA
		L-2007	TOWER LIGHTING (SHEET 1 OF 2)		
T-1807	TYPICAL TRAFFIC SIGNAL INSTALLATION			ITS-704-18	TRAVEL TIME SYSTEM, TTS DETECTOR TYPE A SHEET 1 OF 2
		L-2007	TOWER LIGHTING (SHEET 2 OF 2)		
T-1907	METER CABINET "T" AND "TL" ELECTRICAL INSTALLATION			ITS-704-19	TRAVEL TIME SYSTEM, TTS DETECTOR TYPE A SHEET 2 OF 2
		L-2107	LIGHTING ALUMINUM TRANSFORMER BASE PART No. TB-17 (BREAKAWAY)		
T-2007	LOOP DETECTOR TRENCH & LOOP DETECTOR			ITS-704-20	TRAVEL TIME SYSTEM, CONTROLLER TTS & FOUNDATION TTS TYPE A
T-2107	OPTICALLY PROGRAMMED AND MIDMAST MOUNTING DETAILS			ITS-704-21	CONTROLLER ITS
T-2207	SIGN FOUNDATIONS "SSF" & "SSF-A"			ITS-704-22	GENERAL SYSTEMS FIBER CROSS CONNECT CABINET & FOUNDATION ITS TYPE A
T-2907	FOUNDATION "SFX" BARRIER CURB			ITS-704-23	METER CABINET ITS & FOUNDATION ITS TYPE MC
T-3407	TRAFFIC SIGNAL STANDARD STEEL AND ARM DETAILS FOR ELECTRICAL SIGNS			ITS-704-24	FOUNDATION ITS TYPE C, C-MC, D & D-MC
T-3507	METER CABINET FABRICATED TYPE 40" AND 50"			ITS-704-25	COMMUNICATION HUB SHEET 1 OF 4
T-3807	17" x 30" COMPOSITION JUNCTION BOX			ITS-704-26	COMMUNICATION HUB SHEET 2 OF 4
T-4307	STEEL TRAFFIC SIGNAL STANDARD FOUNDATION DETAILS			ITS-704-27	COMMUNICATION HUB SHEET 3 OF 4
T-4507	OVERHEAD MAST ARM ADJUSTABLE SWING SIGN BRACKETS			ITS-704-28	COMMUNICATION HUB SHEET 4 OF 4
				ITS-704-29	WEIGH IN MOTION SYSTEMS, ROADWAY DEVICES
				ITS-704-30	TRAFFIC VOLUME SYSTEM (TVS), ROADWAY LOOPS
				ITS-704-31	CONTROLLER CABINET TYPE P-TMS
				ITS-704-32	ROADWAY WEATHER INFORMATION SYSTEM, WEATHER STATION SHEET 1 OF 2
				ITS-704-33	ROADWAY WEATHER INFORMATION SYSTEM, WEATHER STATION SHEET 2 OF 2
				ITS-704-34	ROADWAY WEATHER INFORMATION SYSTEM, ROADWAY DEVICES

LEGEND:

T — TRAFFIC SIGNAL DETAILS, SECTION 702

L — HIGHWAY LIGHTING DETAILS, SECTION 703

ITS — INTELLIGENT TRANSPORTATION SYSTEMS DETAILS, SECTION 704

NOTE:

DETAILS FOR GENERAL ITEMS, SECTION 701 ARE COVERED UNDER EITHER T, L OR ITS.

BDC-11D-03	CHANGES TO ITS INDEX
BDC-07D -03	ORIGINAL SHEET

NJDOT Design Services

ID=TPXCHOU date=09-AUG-2019 08:32 scale=30.000000:1.000000 pen table=\\njdotprjvw\v8system\njdotvw\projects\NJDOTEng\Pilot\TBLs\Roadway\dot.tbl

file=Z_CADD Dev Team\b_Touhidul\ITS_CADD_Files\INDEX.dgn

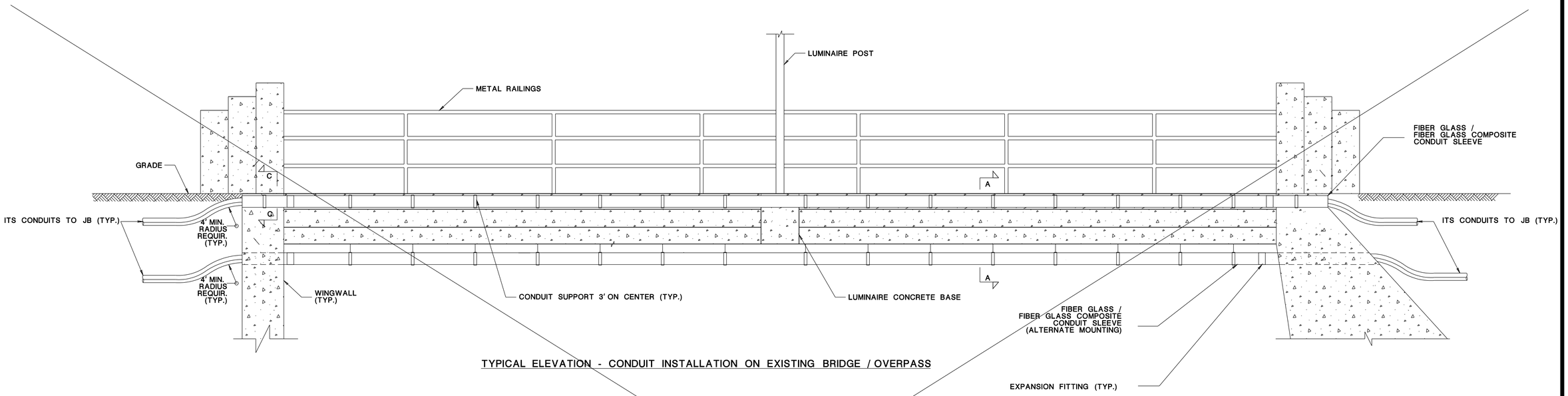

TYPICAL ELEVATION - CONDUIT INSTALLATION ON EXISTING BRIDGE / OVERPASS

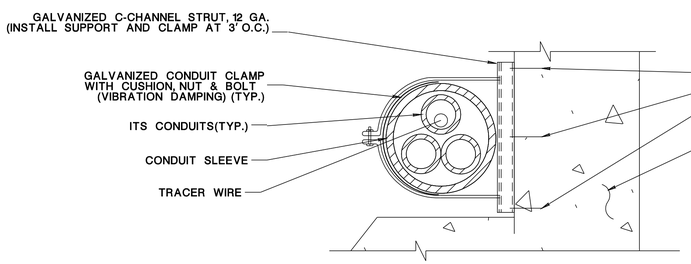

SECTION C-C

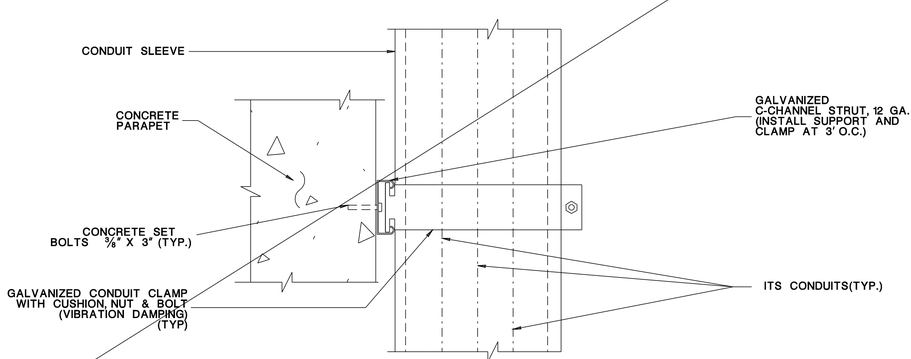

SECTION B-B

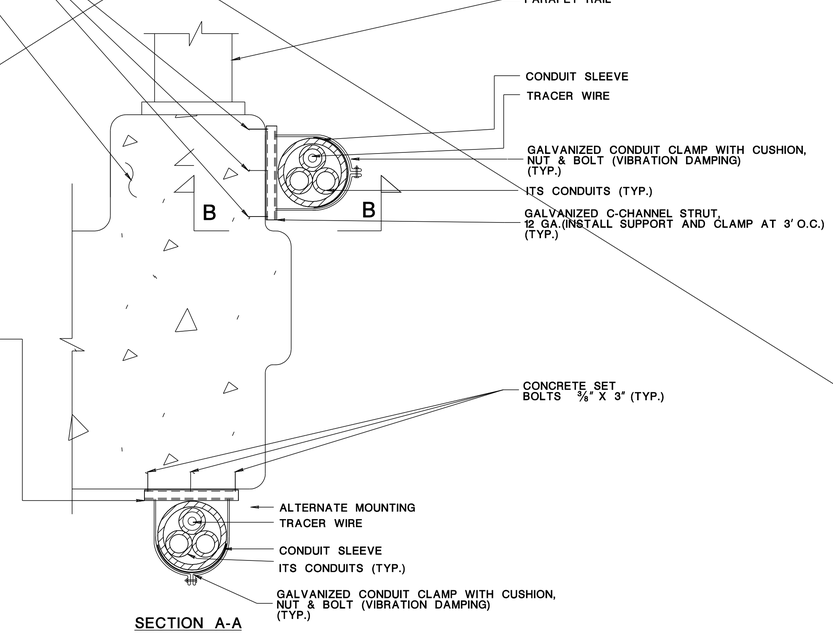

SECTION A-A

NOTES:

1. PROVIDE CONDUIT EXPANSION FITTINGS AT EXISTING STRUCTURE EXPANSION JOINTS.
2. ALTERNATE MOUNTING ON UNDERSIDE OF PARAPET MAY BE PERMITTED WHEN IT IS NECESSARY TO CORE DRILL THROUGH WING WALL IN LIEU OF ABUTMENT WALL. SEAL ALL WING WALL PENETRATIONS WITH EPOXY AROUND CONDUIT.
3. SURVEY EACH STRUCTURE AND SUBMIT SHOP DRAWINGS OF CONDUIT ATTACHMENT DETAILS ALONG WITH MANUFACTURERS RECOMMENDED EXPANSION FITTINGS FOR APPROVAL.
4. IF THERE IS AN EXISTING BRIDGE APPROACH SLAB IN THE SHOULDER AT THE LOCATION OF THE PROPOSED CONDUIT, INSTALL THE CONDUIT BENEATH THE APPROACH SLAB AFTER CORING THROUGH THE BACK WALL. ENSURE THE EXISTING APPROACH SLAB IS NOT DISTURBED.
5. ENSURE THE CONCRETE SET BOLT MATERIAL CONFORMS TO ASTM B-633 AND IS MADE OF ZINC PLATED STEEL. ENSURE THE SET BOLT CHARACTERISTICS CONFORMS TO GSA SPECIFICATION FF S-325, GROUP VII, TYPE 2.
6. WHEN ALTERNATE MOUNTING IS PROPOSED TO BE USED, ENSURE THAT EXISTING UNDER CLEARANCE IS MAINTAINED.

NOT TO SCALE

ITS-704-01

NEW JERSEY DEPARTMENT OF TRANSPORTATION

ITS DETAILS

TYPICAL CONDUIT HANGER ATTACHMENTS

SHEET 1 OF 2

REFERENCE

NJDOT Design Services

BDC-11D-03 MISC. CHANGES
BDC-07D-03 ORIGINAL SHEET

ID=TPXCHOU date=09-AUG-2019 08:34 scale=30.000000:1.000000 pen table=\\njdotpriws\vbsystem\njdotws\projects\NJDOTEng\Iplot\TBLs\Roadway\dot.tbl

file=Z_CADD Dev Team1b_TouhidulITS_CADD_FilesITS-704-01.dgn

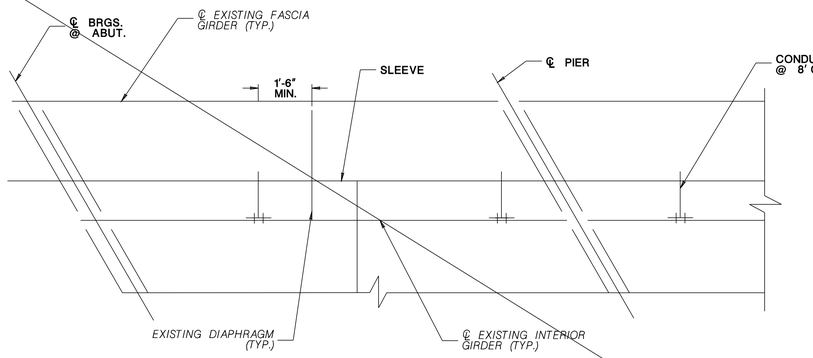

TYPICAL FRAMING PLAN STEEL STRUCTURE

CONDUIT HANGER ATTACHMENT ON EXISTING STRUCTURE

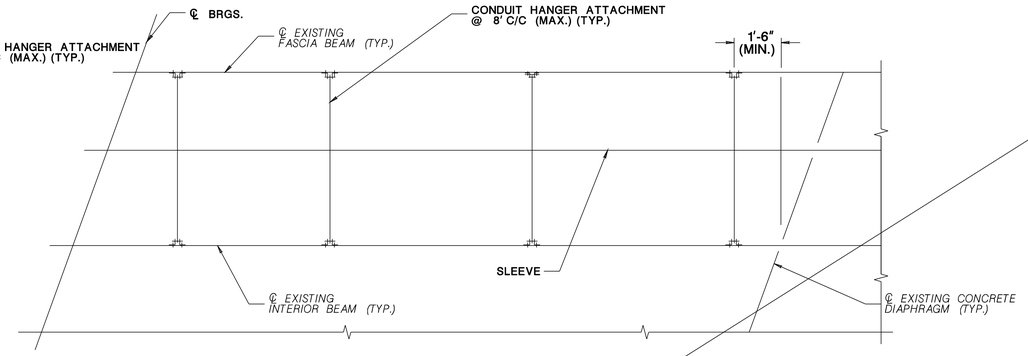

TYPICAL FRAMING PLAN PRESTRESSED CONCRETE STRUCTURE

CONDUIT HANGER ATTACHMENT ON EXISTING STRUCTURE

NOTES:

1. SURVEY EACH STRUCTURE AND SUBMIT SHOP DRAWINGS FOR CONDUIT ATTACHMENT DETAILS AND EXPANSION JOINT DETAILS AND LOCATIONS ALONG EACH STRUCTURE TO THE ENGINEER FOR APPROVAL PRIOR TO THE FABRICATION OF THE CONDUIT SUPPORTS.
2. ENSURE ALL STEEL SHAPES CONFORM TO ASTM A36, BOLTS ARE HIGH STRENGTH, HEX HEAD, CONFORMING TO ASTM A325 AND SUPPLIED WITH ONE NUT AND WASHER PER BOLT. HOT-DIP GALVANIZE STEEL PLATES IN ACCORDANCE WITH ASTM A123 AND ALL THREADED HANGER RODS, NUTS, WASHERS AND SPACER TUBES IN ACCORDANCE WITH ASTM A153.
3. ENSURE HANGER ATTACHMENTS, ARE CONCEALED BY THE FASCIA GIRDER AND THE PROPOSED CONDUIT AND SUPPORTS ARE POSITIONED SUCH THAT THE MINIMUM VERTICAL UNDER CLEARANCE IS NOT LESS THAN THE EXISTING CONDITION.
4. ENSURE STEEL PLATES AND HANGERS ARE CAPABLE OF SUPPORTING 1000 LBS. LOAD AND THE MAXIMUM HANGER SPACING IS 8FT. UNLESS OTHERWISE NOTED OR APPROVED BY THE ENGINEER.
5. WELDING IS NOT PERMITTED.
6. PRIOR TO BOLTING PLATES OR ANGLES TO THE EXISTING GIRDER WEB, ENSURE THE CONNECTING AREA OF THE WEB IS THOROUGHLY CLEANED AND SPOT PAINTED AS PER STRUCTURAL REQUIREMENTS.
7. ENSURE CONDUIT LENGTHS ARE SELECTED SO THAT COUPLINGS DO NOT COINCIDE WITH HANGER LOCATIONS.
8. PROVIDE CONDUIT EXPANSION JOINTS NEAR EACH ABUTMENT AS SHOWN AND AT ALL PIER AND HINGE EXPANSION JOINTS.
9. PROVIDE A MINIMUM OF TWO EXPANSION JOINTS AT ALL BRIDGES. EXPANSION JOINT SPACING NOT TO EXCEED MANUFACTURER'S RECOMMENDATIONS.
10. ENSURE THE FINISH COAT PAINT COLOR MATCHES WITH THE PAINT COLOR ON THE EXISTING STRUCTURE.
11. IF THERE IS AN EXISTING BRIDGE APPROACH SLAB AND/OR TRANSITION SLAB IN THE SHOULDER AT THE LOCATION OF THE PROPOSED CONDUIT, INSTALL THE CONDUIT BENEATH THE APPROACH SLAB AND/OR TRANSITION SLAB AFTER CORING THROUGH THE ABUTMENT BACKWALL. ENSURE THE EXISTING APPROACH SLAB AND/OR TRANSITION SLAB IS NOT DISTURBED.
12. SUBMIT DETAIL OF SEAL BETWEEN PIPE SLEEVE AND CONDUIT TO THE ENGINEER FOR APPROVAL.

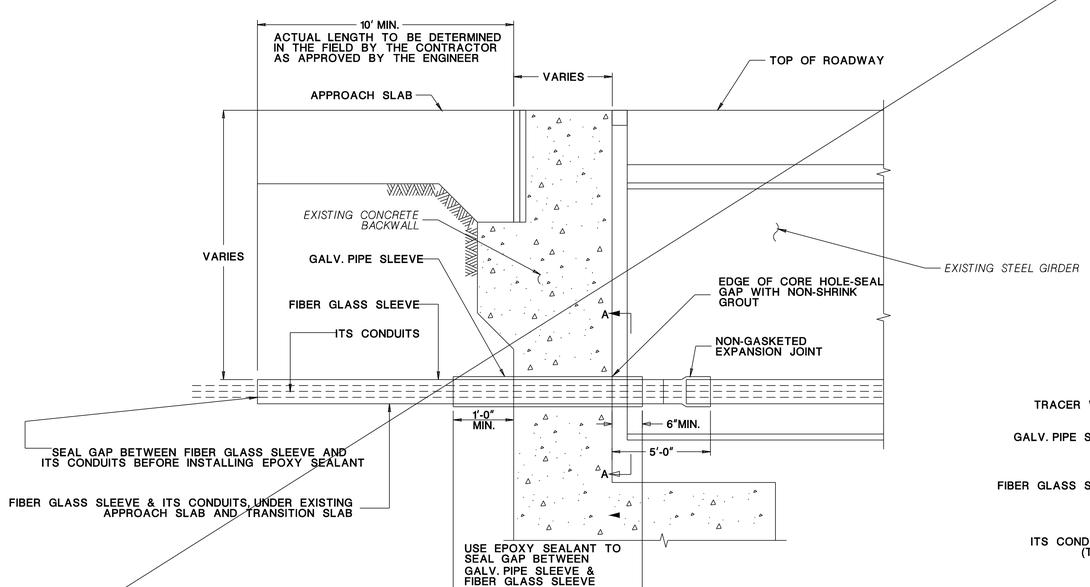

SECTION THROUGH EXISTING ABUTMENT BACKWALL

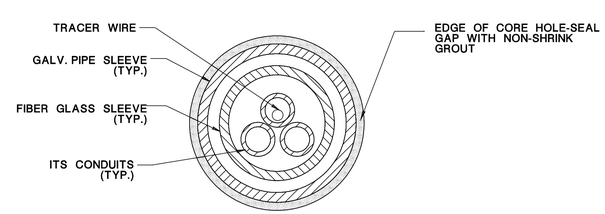

SECTION A-A

NOT TO SCALE

ITS-704-02

NEW JERSEY DEPARTMENT OF TRANSPORTATION

ITS DETAILS

TYPICAL CONDUIT HANGER ATTACHMENTS

SHEET 2 OF 2

BDC-11D-03	MISC. CHANGES
BDC-07D-03	ORIGINAL SHEET

NJDOT Design Services

ID=TPXCHOU date=09-AUG-2019 08:37 scale=30.000000:1.000000 pen table=\\njdotpriws\v8system\njdotws\projects\NJDOTEng\Iplot\TBLs\Roadway\dot.tbl

file=Z_CADD Dev Team4b_Touhidul4TS_CADD_Files4TS-704-02.dgn