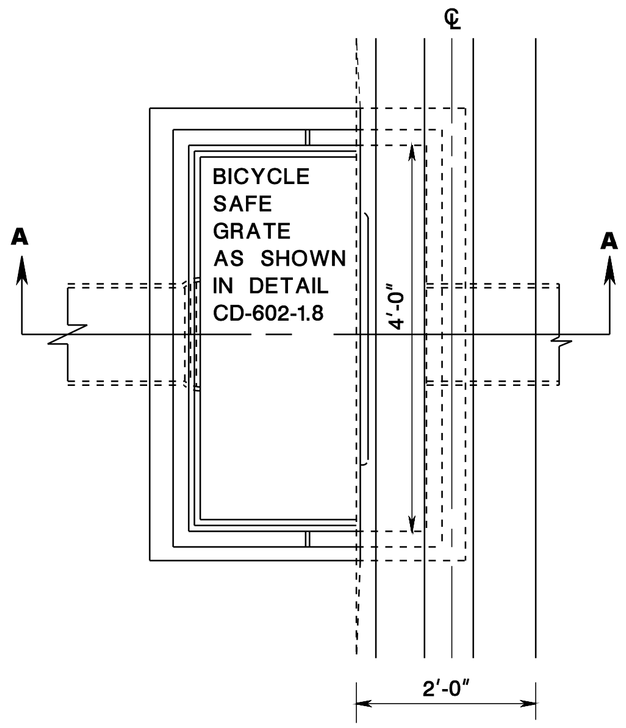

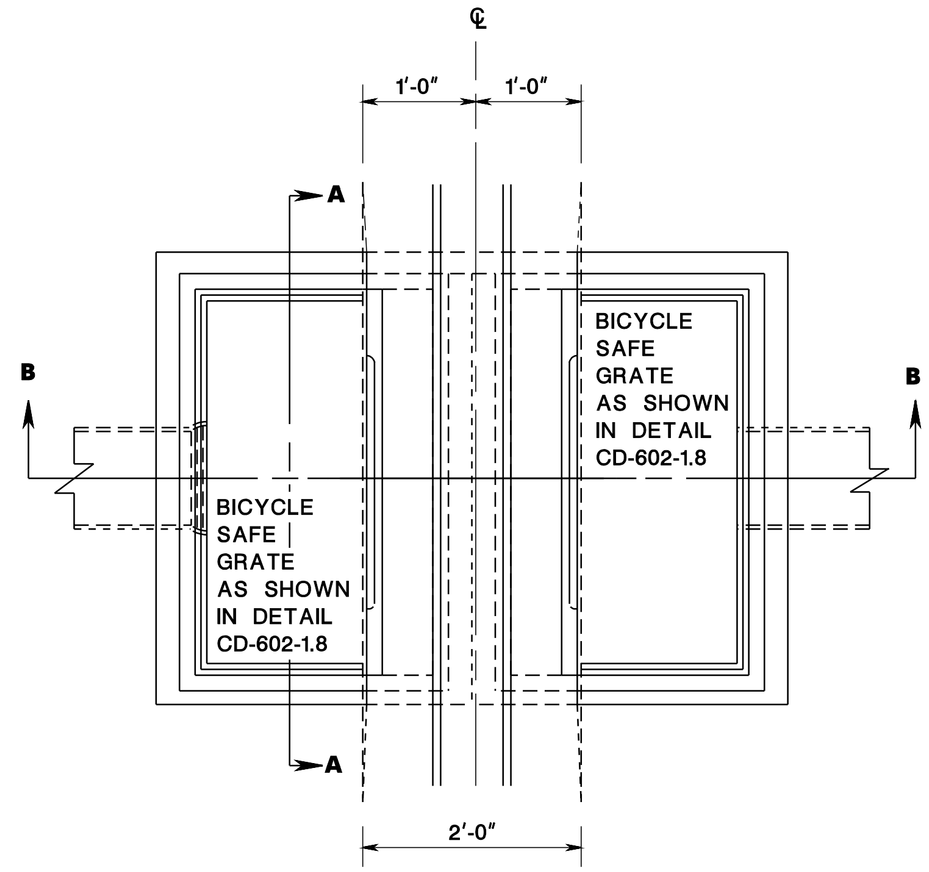

PLAN

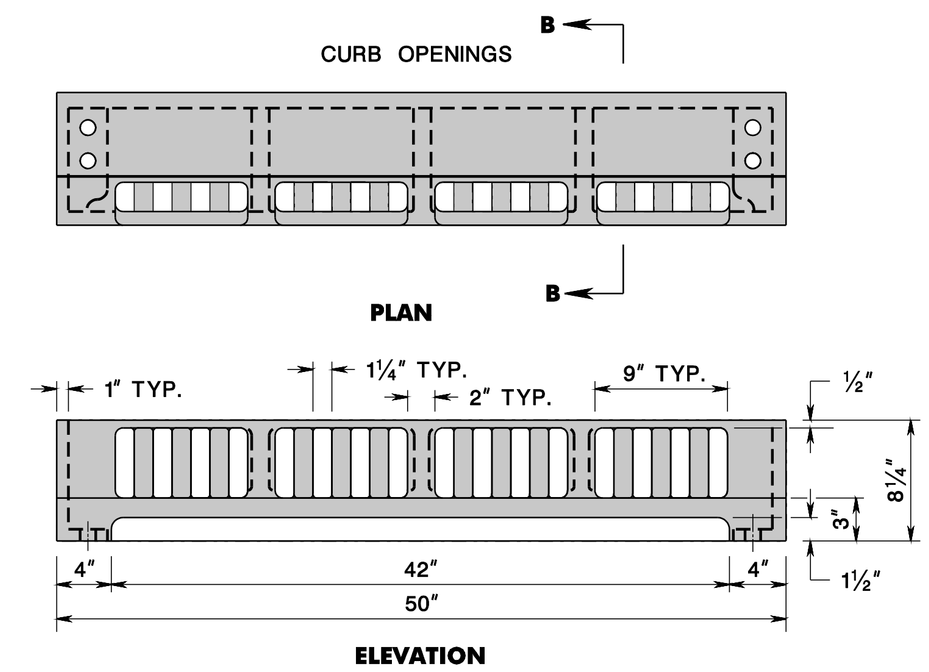

PLAN

ELEVATION

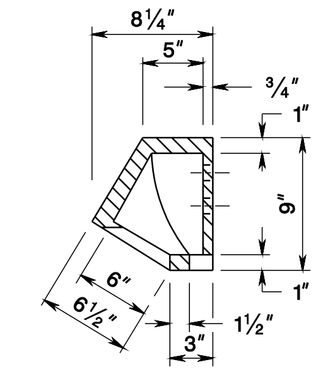

SECTION B–B

CURB PIECE FOR INLETS, TYPE D1 AND D2

CD-602-5.3

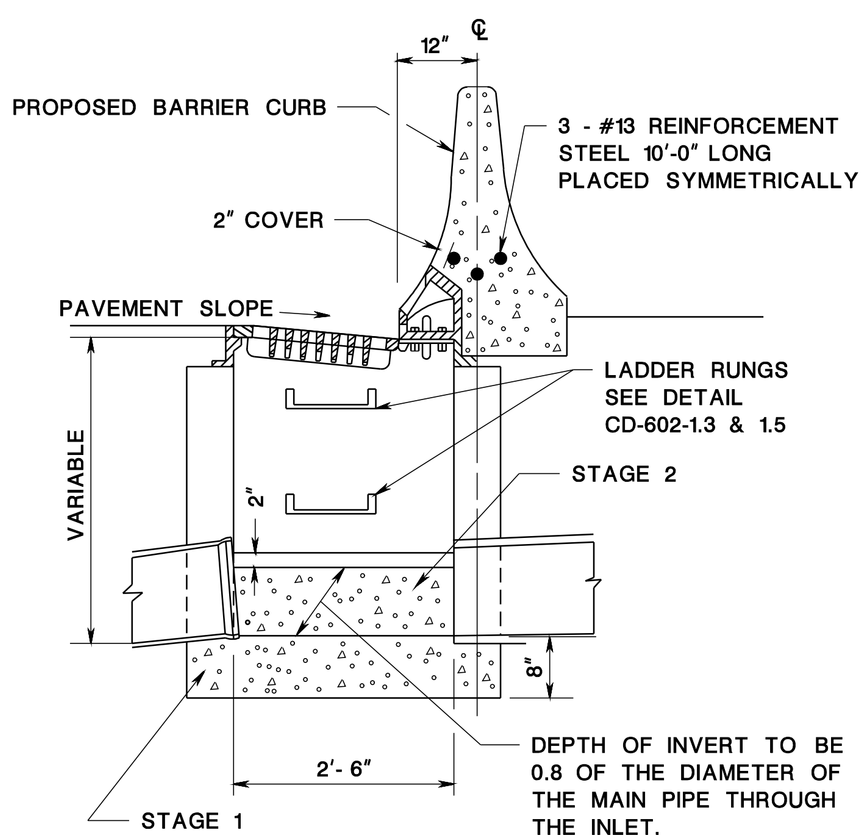

SECTION A–A

NOTE:

CONSTRUCT FOUNDATION AND INVERT IN 2 STAGES.
LEAVE TOP SURFACE OF STAGE 1 ROUGH.

INLET, TYPE D1

CD-602-5.1

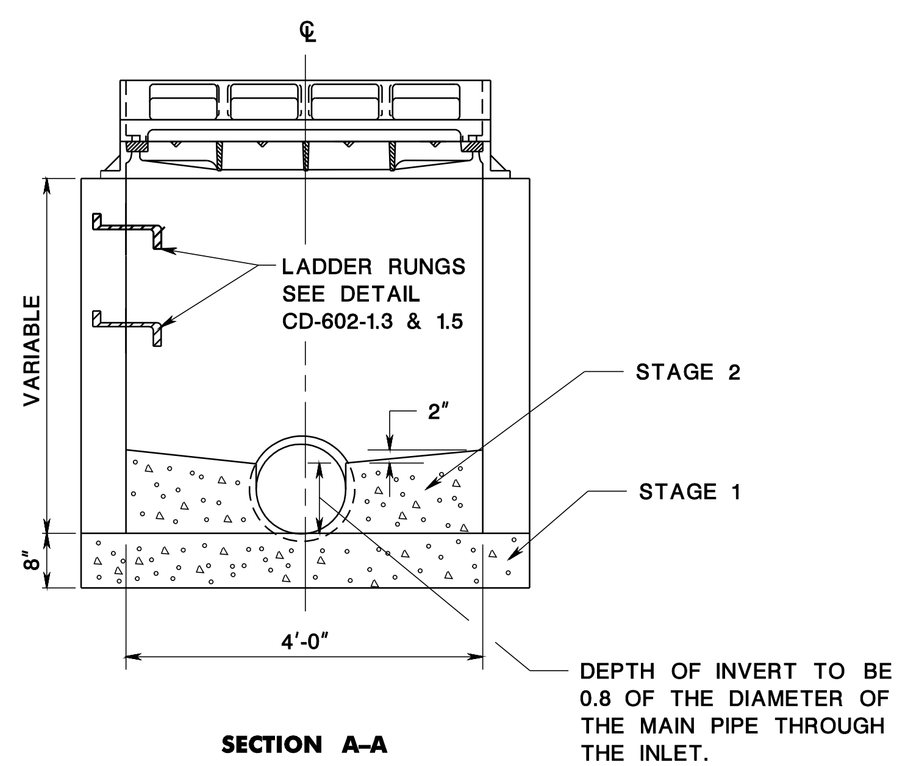

SECTION A–A

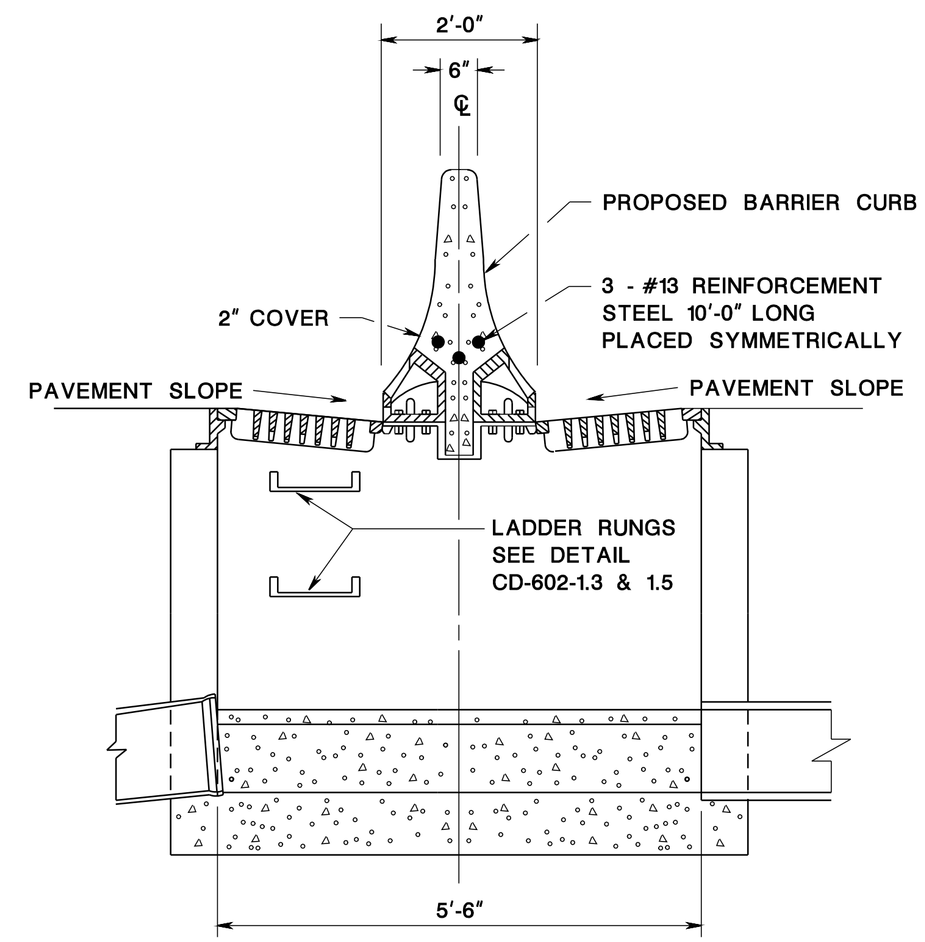

SECTION B–B

NOTE:

CONSTRUCT FOUNDATION AND INVERT IN 2 STAGES.
LEAVE TOP SURFACE OF STAGE 1 ROUGH.

INLET, TYPE D2

CD-602-5.2

GENERAL NOTES:

1. SEE GENERAL NOTES 9 AND 10 AT CD-602-1.6.
2. THE CLEAR SPACE IN THE CURB OPENING (OR EACH INDIVIDUAL CLEAR SPACE, IF THE CURB OPENING HAS TWO OR MORE CLEAR SPACES) MUST HAVE AN AREA OF NO MORE THAN SEVEN (7.0) SQUARE INCHES, OR BE NO GREATER THAN TWO (2.0) INCHES ACROSS THE SMALLEST DIMENSION.

CD-602-5.4

INLETS, TYPE D1 & D2

N.T.S.

CD-602-5

NEW JERSEY DEPARTMENT OF TRANSPORTATION

CONSTRUCTION DETAILS

BDC24D-04 - REVISED NOTES IN CD-602-5.3, AND CD-602-5.4
BDC99D-01-ORIGINAL SHEET

ID=000810722 date=11-FEB-2025 10:56 scale=30.000000:1.000000 pen table=\\njdotprtwa\v8system\njdotwa\projects\njdotong\plot\tbls\roadway\details.tbl
file=Independent Users/Murugeshu Uthayakumaran/MicroStation 2004 Files/BDC-inlets/042_CD-602-5InletsTypeD1&D2.dgn