DCA REVIEW ST.

Department of Community Affairs
Construction Project Review
Project No: 5018-17
Amended Electrical Release
Electrical
Richard Butterfield
Released: 07/09/18
N.J.S.A. 52:27D-119 ET SEQ., AS AMENDED

SYMBOL LEGEND

- UNDERGROUND LINE
- AERIAL LINE
- EXISTING FENCE
- EXISTING EQUIPMENT/WIRING
- EXISTING TO BE REMOVED
- POWER TRANSFORMER
- POTENTIAL TRANSFORMER (PT)
- CURRENT TRANSFORMER (CT)
- FUSED INTERRUPTER SWITCH
- UTILITY POLE
- JUNCTION BOX
- G — GENERATOR
- NOR G — NORESCO GENERATOR
- TG — TEMPORARY GENERATOR
- 52 — DRAW OUT CIRCUIT BREAKER
- 600A, 15kV ELBOW CONNECTOR
- 600A, 15kV JUNCTION
- 25 — SYNCRONIZING RELAY
- 27 — UNDER VOLTAGE RELAY
- 32 — DIRECTIONAL POWER RELAY
- 40 — FIELD LOSS RELAY
- 46 — REVERSE PHASE RELAY
- 50/51 — OVERCURRENT RELAY
- 50G/51G — GROUND OVERCURRENT RELAY
- 59 — OVER VOLTAGE RELAY
- 81 ou — OVER/UNDER FREQUENCY RELAY
- 86L — LOCKOUT RELAY AND SIGNAL LIGHT
- 87G — GROUND DIFFERENTIAL RELAY
- M — METERING

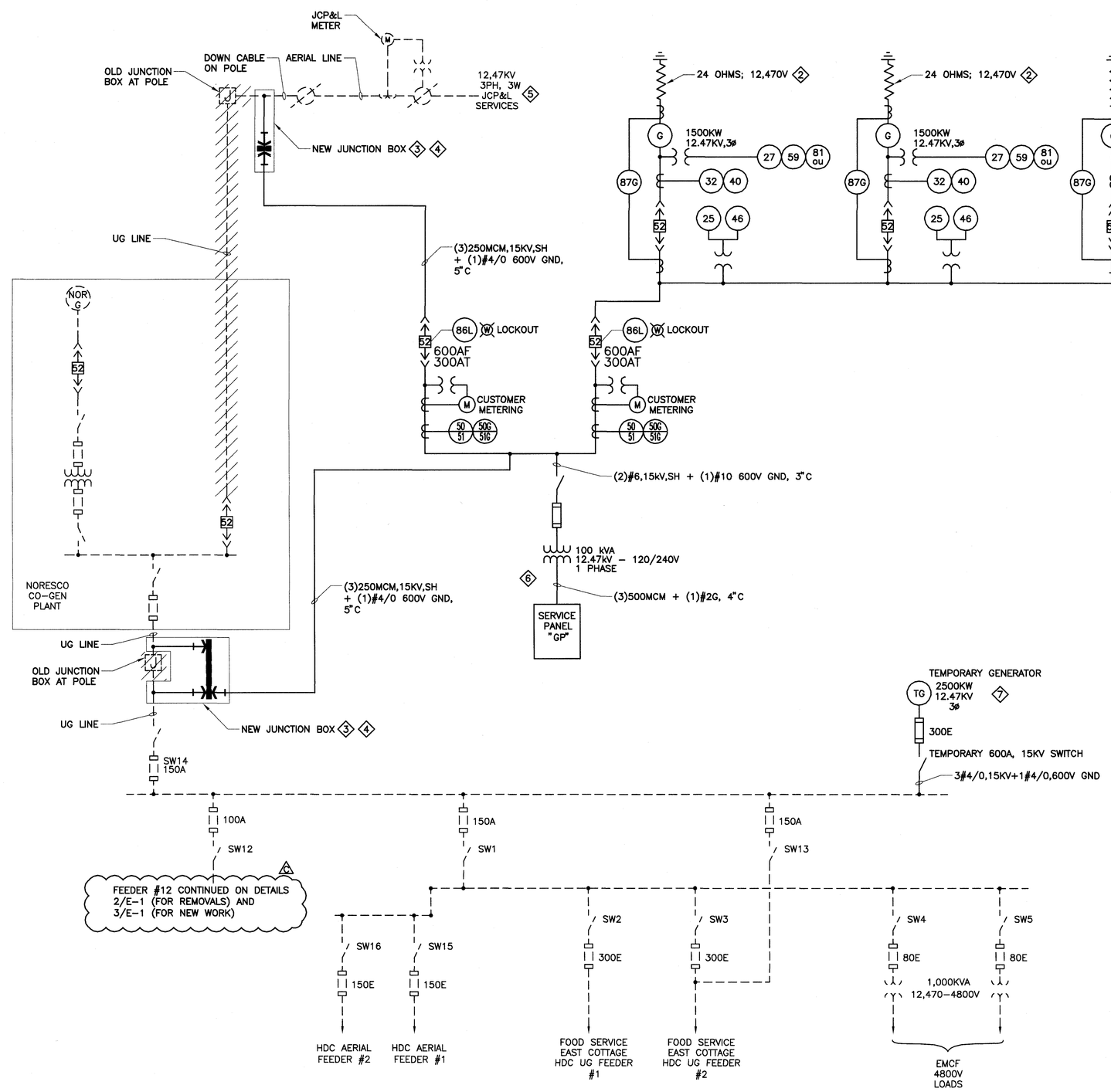

1 / E-1 SINGLE LINE DIAGRAM
SCALE: NO SCALE

NOTES	SCHEDULE FOR NEW ELECTRICAL PANEL						GP					GENERAL PANEL DATA									NOTES
												VOLT. 120/240V, 1PH, 3W							MOUNT: SURFACE		
												BUS: 400A				MCB 400A					
	LOAD SERVED	COND	WIRE SIZE	WIRE NO.	GRD	KVA	BKR SIZE	CKT NO.	PHASE LOAD A	PHASE LOAD B	CKT NO.	BKR SIZE	KVA	GRD	WIRE SIZE	WIRE NO.	COND	LOAD SERVED	
	GENERATOR 1 JACKET HEATER	3/4"	#8	2	#10	4.5	50	1	5.0		2	50	4.5	#10	#8	2	3/4"	GENERATOR 3 JACKET HEATER	
						4.5	2P	3		9.0	4	2P	4.5						
	GENERATOR 2 JACKET HEATER	3/4"	#8	2	#10	4.5	50	5	6.0		6	20	1.5	#12	#12	2	3/4"	GENERATOR 1 STRIP HTR	
						4.5	2P	7		5.0	8	20	1.5	#12	#12	2	3/4"	GENERATOR 2 STRIP HTR	
	GENERATOR 1 CHARGER	3/4"	#12	2	#12	1.0	20	9	2.5		10	20	1.5	#12	#12	2	3/4"	GENERATOR 3 STRIP HTR	
	GENERATOR 2 CHARGER	3/4"	#12	2	#12	1.0	20	11		2.0	12	20	1.0	#12	#12	2	3/4"	SWITCHGEAR STRIP HEATER #1	
	GENERATOR 3 CHARGER	3/4"	#12	2	#12	1.0	20	13	2.0		14	20	1.0	#12	#12	2	3/4"	SWITCHGEAR STRIP HEATER #2	
	DAY TANK 1	3/4"	#8	2	#10	4.0	50	15		5.0	16	20	1.0	#12	#12	2	3/4"	SWITCHGEAR STRIP HEATER #3	
						4.0	2P	17	8.0		18	50	4.0	#10	#8	2	3/4"	DAY TANK 3	
	DAY TANK 2	3/4"	#8	2	#10	4.0	50	19		8.0	20	2P	4.0						
						4.0	2P	21	5.0		22	20	1.0	#12	#12	2	3/4"	TANK CONTROLS	
	FILTER/POLISHER	3/4"	#12	2	#12	1.0	20	23		2.6	24	20	1.6	#12	#12	2	3/4"	HEAT TRACE	
						1.0	2P	25	2.6		26	20	1.6	#12	#12	2	3/4"	HEAT TRACE	
	GENERATOR 1 LIGHT AND RECEPT.	3/4"	#12	2	#12	0.3	20	27		1.9	28	20	1.6	#12	#12	2	3/4"	HEAT TRACE	
	GENERATOR 2 LIGHT AND RECEPT.	3/4"	#12	2	#12	0.3	20	29	1.9		30	20	1.6	#12	#12	2	3/4"	HEAT TRACE	
	GENERATOR 3 LIGHT AND RECEPT.	3/4"	#12	2	#12	0.3	20	31		0.3	32								
								33	0.0		34								
								35		0.0	36								
								37	0.0		38								
								39		0.0	40								
								41	0.0		42								
	LOCATION:								37.0	34.8		PHASE KVA							
	NOTES									71.8		TOTAL KVA							
	1.																		
	2.																		
	3.																		
	4.																		

GENERAL NOTES:

1. PROVIDE ON ALL NEW EQUIPMENT ELECTRICAL SYSTEM INFORMATION LABELS AS REQUIRED, INCLUDING BUT NOT LIMITED TO "SERVICE ENTRANCE" LABEL AND SYSTEM ELECTRICAL CHARACTERISTICS, INCLUDING AVAILABLE SHORT CIRCUIT VALUE.
2. GENERATING SYSTEM SHALL BE CLASSIFIED ACCORDING TO NFPA–110, 2013, ARTICLES 4.2, 4.3, AND 4.4 AS CLASS 96, TYPE 10, LEVEL 1. TYPE 10 SHALL APPLY ONLY TO CONNECTION OF THE FIRST GENERATOR TO SERVICE BUS.

SHEET NOTES:

1. REMOVE EXISTING 1,200 kW GENERATOR ONLY AFTER THE NEW EQUIPMENT IS IN PLACE AND OPERATIONAL.
2. FOR EACH GENERATOR, PROVIDE GROUND RESISTOR TO LIMIT GROUND FAULT TO 300A.
3. ONE NEW JUNCTION BOX LOCATED AT THE FOOT OF JCP&L END OF LINE POLE TO REPLACE THE EXISTING JUNCTION BOX AT THE SAME LOCATION. SEE DRAWING E–2, SHEET NOTE 2.
4. COORDINATE ALL WORK ASSOCIATED WITH MODIFICATIONS OF THE MEDIUM VOLTAGE SERVICE LINE WITH JCP&L (CONTACT JOSEPH PANTO AT email JPANTO@FIRSTENERGYCORP.COM) AND WITH NORESCO (CONTACT WALLACE SLOYER email WSLOYER@NORESCO.COM).
5. AVAILABLE SHORT CIRCUIT AT JCP&L SERVICE:
   3 PHASE – 4,450A
   PHASE TO GROUND – 4,400A
   X/R=6.2
6. PROVIDE CONTROL TRANSFORMER AND LOW VOLTAGE PANEL GP AS PART OF THE MEDIUM VOLTAGE SWITCHGEAR.
7. TEMPORARY GENERATOR REQUIRED ONLY WHEN SEQUENCE OF INSTALLATION REQUIRES INTERRUPTION OF UTILITY POWER CONNECTION FOR MORE THAN TWO HOURS. SEE SPECIFICATION SECTION 015000 TEMPORARY FACILITIES, ARTICLE 3.3.E.
8. RETAIN EXISTING ASCO SWITCH ENCLOSURE. PERMANENTLY LOCK TRANSFER SWITCH IN THE "N" POSITION.
9. PROVIDE(3)#2/0 EPR,15kV, SHIELDED, 133%, & (1)#1, 600V GROUND FROM THE LOAD SIDE OF THE CUTLER HAMMER SWITCH INTO THE TRANSFER SWITCH AND SPLICE TO THE TWO FEEDERS FROM MANHOLE "P1" AS SHOWN.

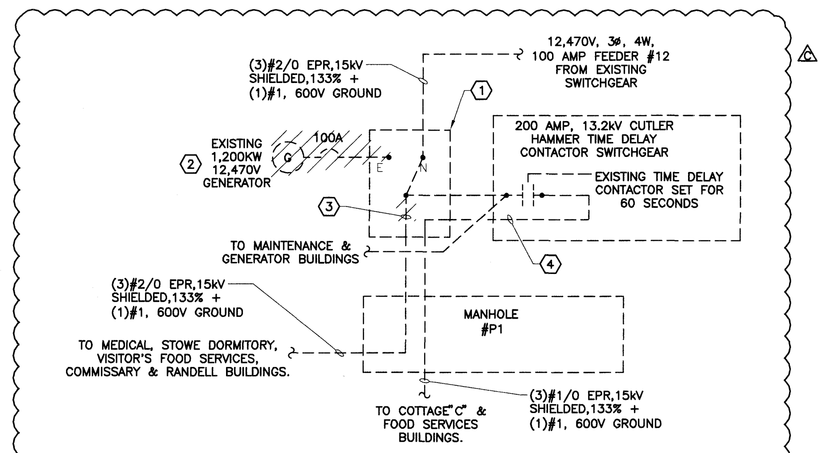

REMOVAL NOTES:

THE REMOVAL NOTES BELOW APPLY TO DETAIL 2/E–1 ONLY

1. EXISTING ASCO AUTOMATIC TRANSFER SWITCH & SWITCH ENCLOSURE TO REMAIN.
2. REMOVE 1200kW, 12,470V GENERATOR.
3. DISCONNECT THE FEEDER FROM THE LOAD SIDE OF THE TRANSFER SWITCH. MAINTAIN FOR REUSE AS SHOWN ON DETAIL 2/E–1.
4. DISCONNECT THE FEEDER FROM THE LOAD SIDE OF THE CUTLER HAMMER SWITCHGEAR. PULL THE EXISTING FEEDER BACK FROM THE CONTACTOR INTO THE TRANSFER SWITCH FOR SPLICING AS SHOWN ON DETAIL 3/E–1.

2 / E-1 DISCONNECT AND REMOVAL WORK AT EXISTING TRANSFER SWITCH AND CUTLER HAMMER SWITCHGEAR
SCALE: NO SCALE

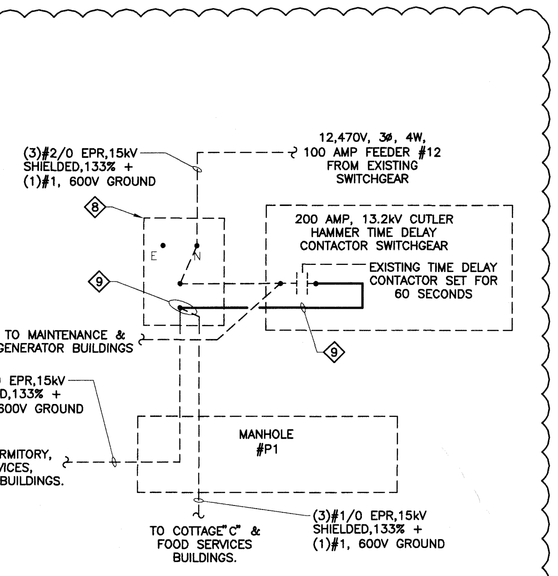

3 / E-1 NEW WORK AT EXISTING TRANSFER SWITCH AND CUTLER HAMMER SWITCHGEAR
SCALE: NO SCALE

REV	DATE	DESCRIPTION	APP
C	06/08/2018	ADDED DETAILS 2/3–1 AND 3/3–1	DRH
B	03/15/2017	ISSUE FOR BIDS	AN
A	01/13/2017	ISSUE FOR DCA HEALTHCARE REVIEW	-

COPYRIGHT © 2017, GILLAN & HARTMANN, INC., ALL RIGHTS RESERVED. DRAWINGS AND/OR SPECIFICATIONS MAY NOT BE USED FOR ANY PURPOSE OTHER THAN THAT CONTEMPLATED BY THE PROFESSIONAL SERVICES CONTRACT, AT THE ONE LOCATION INDICATED.

SEAL

SEAL

ENGINEER: MICHAEL S. GILLAN, PE NO. 24GE04470000 — DATE 7/11/18

SHEET TITLE: SINGLE LINE DIAGRAM

PROJECT: DPMC A1209–00 EMERGENCY GENERATOR REPLACEMENT EMCF & HDC

Gillan & Hartmann, Inc.
MECHANICAL AND ELECTRICAL CONSULTING ENGINEERS
610–935–0101 FAX: 610–935–7520
215–238–9510 609–347–1593 302–654–5959
Cert. of Auth. #24GA27932400 EMAIL: ghmail@gillan-hartmann.com INTERNET: www.gillan-hartmann.com

DRAWN BY	DATE	JOB NO.	SHEET
PGC/JTM	01–13–2017	2015–247	E–1
CHECKED BY: AN	SCALE: NONE	COMM. NO.	