## CONTACTOR TABLE

| BUILDING NO. KEYPLAN | BUILDING NAME | SERVICE | CONTACTOR * EXISTING | CONTACTOR * AMPS |
|---|---|---|---|---|
| | EMCF | | | |
| EM1 | NORTH HALL | 1600A | Y | 800 |
| EM2 | SOUTH HALL | 1600A | Y | 800 |
| EM9 | FOOD SERVICE | 1600A | Y | 800 |
| | HDC | | | |
| H6 THRU H23 | COTTAGES | 400A | Y | 225 |

* CONTACTOR Y= EXISITNG CONTACTOR
SEE DETAIL 1/E-3

## SHEET NOTES:

1. PROVIDE NEW TIME DELAY RELAYS IN NEMA 12 ENCLOSURES.TIME DELAY RELAYS SHALL BE POWER TRIGGERED ON DELAY, ADJUSTABLE 30 SECONDS TO 30 MINUTES, DPDT RELAY CONTACTS AND COIL VOLTAGE COORDINATED WITH THE POWER SOURCE; MANUFACTURED BY EATON, SCHNEIDER ELECTRIC, SIEMENS OR APPROVED EQUAL.
2. COMMUNICATION CABLE ON MESSENGER FOR REMOTE ANNUNCIATORS IN THOMPSON BUILDING. USE FOR SUPPORTS EXISTING POLES FOR MEDIUM VOLTAGE LINES TO HDC. RUN AERIAL CABLE TO A NEW WEATHER HEAD ON THE BUILDING REAR WALL, THEN PENETRATE TO A PLACE ABOVE INTERIOR CEILING. CONTINUE ABOVE THE CEILING IN 1-1/2 INCH CONDUIT, THEN DROP TO THE ANNUNCIATOR LOCATION IN THE COMMAND ROOM AT A LOCATION INDICATED BY THE AGENCY.
3. COMMUNICATION CABLE ON MESSENGER FOR HDC REMOTE ANNUNCIATORS AND INTERFACE WITH HDC JOHNSON CONTROLS BUILDING MANAGEMENT SYSTEM (BMS). USE FOR SUPPORTS EXISTING POLES FOR MEDIUM VOLTAGE LINES TO HDC. RUN AERIAL CABLE TO THE LAST POLE ON HDC SITE, THEN UNDERGROUND IN DIRECTLY BURIED CONDUIT TO THE HDC FACILITIES OFFICE BUILDING, UP THE BUILDING WALL, THEN PENETRATE TO A PLACE UNDER THE CEILING. CONTINUE IN 1-1/2 INCH CONDUIT, THEN DROP TO THE EXISTING BMS NODE IN THE MECHANICAL ROOM. PROVIDE IN THE HOSPITAL BUILDING H1 NEW GENERATOR REMOTE ANNUNCIATORS IN THE NURSE OFFICE. PROVIDE FROM EXISTING BMS NODE IN HOSPITAL BUILDING H1 ALL SOFTWARE AND HARDWARE, INCLUDING A CONNECTING CABLE TO INTERFACE AND SERVE THE NEW ANNUNCIATORS.
4. ALTERNATE BID NO.1. PROVIDE FOR HDC BUILDINGS ONLY BMS SOFTWARE SIGNALS IN LIEU OF HARDWARE TIME DELAY RELAYS INDICATED IN SHEET NOTE 1. INTERFACE WITH GENERATOR PARALLELING COMPLETION SIGNAL AS DESCRIBED IN SPECIFICATION SECTION 260913, SEQUENCE OF OPERATION. CONNECT BMS DRY CONTACT OUTPUT TO INDIVIDUAL HDC BUILDING CONTACTORS FROM EACH HDC BUILDING BMS NODE. ASSUME AN AVERAGE OF 100 FT OF CABLE AT EACH LOCATION.

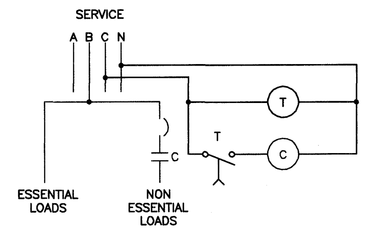


1 / E-3A TYPICAL BUILDING W/ CONTACTOR FOR NON ESSENTIAL LOADS – 26 LOCATIONS

SCALE: NO SCALE
APPLIES TO BUILDINGS:
EDNA MAHAN CORRECTIONAL FACILITY: EM1, EM2, EM9, EM10. SEE SHEET NOTE 1. PROVIDE NEW TIME DELAY RELAY T.
HUNTERDON DEVELOPMENTAL CENTER: H6 THROUGH H23. SEE SHEET NOTES #1 AND #4. PROVIDE NEW TIME DELAY RELAY T FOR BASE BID AND BMS CONTROLS FOR ALTERNATE BID.

## REVISION NOTES:

REMOVE THE WORK SHOWN ON DETAILS 2/E-3, 3/E-3, 3A/E-3, 4/E-3, 4A/E-3, 5/E-3, 5A/E-3, 6/E-3, 6A/E-3, 7/E-3, 7A/E-3, 8/E-3, 8A/E-3 AND 10/E-3.

DCA REVIEW ST.

Department of Community Affairs
Construction Project Review
Project No: 5018-17
Amended Electrical Release
Electrical
Richard Butterfield
Released 07/09/18
N.J.S.A. 52:27D-119 ET SEQ., AS AMENDED

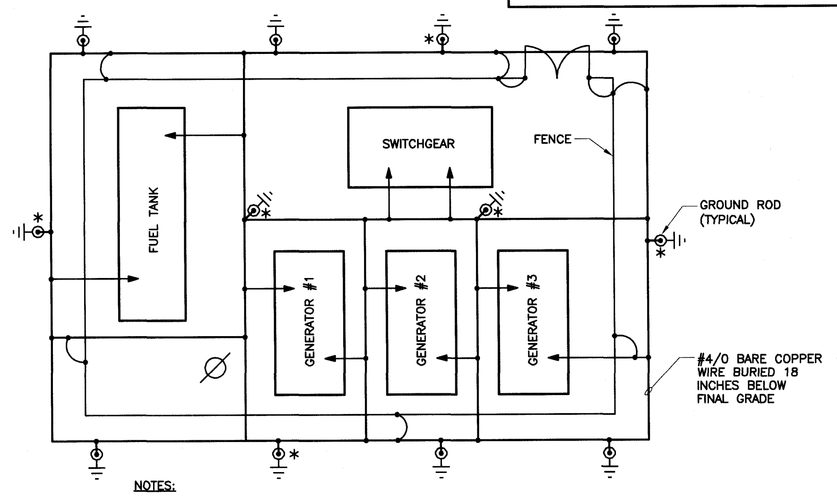


NOTES:
1. ✱ INDICATES TEST WELL.
2. ACTUAL DIMENSIONS TO BE DETERMINED BASED ON FINAL EQUIPMENT LAYOUT.

8 / E-3A GENERATING PLANT GROUNDING
SCALE: NO SCALE

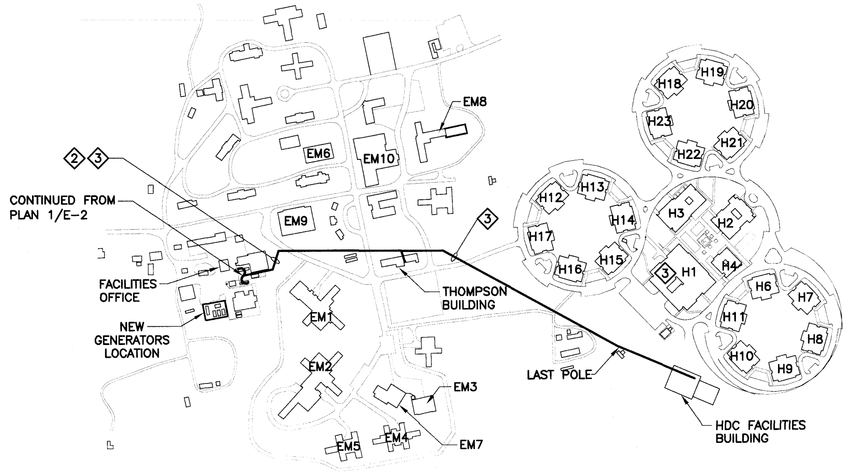


NOTE:

FOR BIDDING PURPOSES, ASSUME THE FOLLOWING DISTANCES:
1. AERIAL LINE FROM POLE AT CORNER OF SHED ON PLAN 1/E-2 TO THOMPSON BUILDING: 1,000 FT.
2. LINE INSIDE THOMPSON BUILDING: 100 FT.
3. AERIAL LINE FROM POLE AT CORNER OF SHED ON PLAN 1/E-2 TO LAST POLE ON HDC SITE: 2,150 FT.
4. UNDERGROUND LINE FROM LAST POLE ON HDC SITE TO HDC FACILITIES BUILDING: 300 FT.
5. LINE INSIDE HDC FACILITIES BUILDING: 200 FT.

9 / E-3A KEY PLAN
SCALE: 1"= 400'-0"

| REV | DATE | DESCRIPTION | APP |
|---|---|---|---|
| C | 06/08/2018 | DETAILS REMOVED FROM DRAWING | DRH |
| B | 03/15/2017 | ISSUE FOR BIDS | AN |
| A | 01/13/2017 | ISSUE FOR DCA HEALTHCARE REVIEW | - |

COPYRIGHT © 2017, GILLAN & HARTMANN, INC., ALL RIGHTS RESERVED. DRAWINGS AND/OR SPECIFICATIONS MAY NOT BE USED FOR ANY PURPOSE OTHER THAN THAT CONTEMPLATED BY THE PROFESSIONAL SERVICES CONTRACT, AT THE ONE LOCATION INDICATED.

SEAL

SEAL

SHEET TITLE
ELECTRICAL DETAILS

PROJECT
DPMC A1209-00
EMERGENCY GENERATOR REPLACEMENT
EMCF & HDC

Gillan & Hartmann, Inc.
MECHANICAL AND ELECTRICAL
CONSULTING ENGINEERS
610-935-0101 FAX: 610-935-7520
215-238-9510 609-347-1593 302-654-5959
Cert. of Auth. #24GA27032400 EMAIL: gihma@gillan-hartmann.com INTERNET: www.gillan-hartmann.com

ENGINEER MICHAEL S. GILLAN, PE NJ #GE04473000 DATE 7/6/18

| DRAWN BY | DATE | JOB NO. | SHEET |
|---|---|---|---|
| JTM | 01-13-2017 | 2015-247 | E-3A |
| CHECKED BY AN | SCALE NONE | COMM. NO. | |

Jul 21, 2018 3:23pm ofn Layout: E-3A O:\projects\2015\2015247 DPMC Energy Gen Motor Control Fac\E-3A.dwg